US Army Corps
of Engineers
Savannah District

Hunter Army Airfield
Georgia

Solicitation Number
DACA21-03-R-0015
Marine Corps Reserve Center
FY-03, Line Item 955
May 2003

PHASE TWO OF TWO PHASE DESIGN/BUILD SUBMITTAL PROCEDURE

THIS SOLICITATION IS UNRESTRICTED PURSUANT TO THE "BUSINESS OPPORTUNITY DEVELOPMENT REFORM ACT OF 1988" (PUBLIC LAW 100-656)

U.S. ARMY ENGINEER DISTRICT, SAVANNAH
CORPS OF ENGINEERS
100 WEST OGLETHORPE AVENUE
SAVANNAH, GEORGIA 31401-3640

PROJECT TABLE OF CONTENTS

00010	Supplies or Services and Prices/Costs
00100	Instructions, Conditions, and Notices to Offerors
00600	Representations and Certifications
00700	Contract Clauses
00800	Special Contract Requirements Attachment 1 to Section 00800
01010	Description/Work Statement/General Requirements/ Hunter AAF Borrow Pit Permit and Guidance
01012	Design After Award
01312	Quality Control System (QCS)
01320	Project Schedule
01330	Submittal Procedures
01420	Source for Reference Publications
01451	Contractor Quality Control
01500	Temporary Construction Facilities
01780	Closeout Submittals
01781	Operation and Maintenance Data

Specifications

APPENDICES

Appendix A	References
Appendix B	Functional Room Requirements
Appendix C	Fire Protection/Life Safety Code Analysis
Appendix D	Sustainable Project Rating Tool (SpiRiT)
Appendix E	SPiRiT Requirements and Summary Table
Appendix F	Subsurface Exploration and Geotechnical Engineering Report (Preliminary)
Appendix G	Finish Requirements Schedule
Appendix H	Interior Design Presentation Format
Appendix J	DoD Minimum Anti-Terrorism Standards for Buildings
Appendix K	Design: Navy and Marine Corps Intranet (NMCI) Standard Construction Practices. (DRAFT)

SOLICITATION, OFFER, AND AWARD *(Construction, Alteration, or Repair)*	1. SOLICITATION NO. DACA21-03-R-0015-0002	2. TYPE OF SOLICITATION [ ] SEALED BID (IFB) [X] NEGOTIATED *(RFP)*	3. DATE ISSUED 31-Jan-2003	PAGE OF PAGES 1 OF 214

IMPORTANT - The "offer" section on the reverse must be fully completed by offeror.

4. CONTRACT NO.	5. REQUISITION/PURCHASE REQUEST NO.	6. PROJECT NO.

7. ISSUED BY CODE DACA21	8. ADDRESS OFFER TO *(If Other Than Item 7)* CODE
A-E & CONSTRUCTION BRANCH 100 W. OGLETHORPE AVE SAVANNAH GA 31401-3640	**See Item 7**
TEL:(912)652-5075 FAX: (912)652-5828	TEL: FAX:

9. FOR INFORMATION CALL:	A. NAME	B. TELEPHONE NO. *(Include area code)* *(NO COLLECT CALLS)*
	DONNA S KNIGHT	(912)652-5504

SOLICITATION

NOTE: In sealed bid solicitations "offer" and "offeror" mean "bid" and "bidder".

10. THE GOVERNMENT REQUIRES PERFORMANCE OF THE WORK DESCRIBED IN THESE DOCUMENTS *(Title, identifying no., date):*

MARINE CORPS RESERVE CENTER
HUNTER ARMY AIRFIELD, GEORGIA
TWO-PHASE DESIGN-BUILD

FY03, LINE ITEM 955

Contract Specialist: Donna Knight
Phone No: (912) 652-5504
E-Mail: donna.s.knight@sas02.usace.army.mil

Contracting Officer: Kathleen Achord
Phone No: (912) 652-5169
E-Mail: kathleen.a.achord@sas02.usace.army.mil

11. The Contractor shall begin performance within 10 calendar days and complete it within 600 calendar days after receiving [ ] award, [X] notice to proceed. This performance period is [X] mandatory, [ ] negotiable. *(See* 52.211-10 *.)*

12 A. THE CONTRACTOR MUST FURNISH ANY REQUIRED PERFORMANCE AND PAYMENT BONDS? *(If "YES," indicate within how many calendar days after award in Item 12B.)* [X] YES [ ] NO	12B. CALENDAR DAYS 10

13. ADDITIONAL SOLICITATION REQUIREMENTS:

A. Sealed offers in original and 6 copies to perform the work required are due at the place specified in Item 8 by 11:00 AM *(hour)* local time 18 Jul 2003 *(date).* If this is a sealed bid solicitation, offers must be publicly opened at that time. Sealed envelopes containing offers shall be marked to show the offeror's name and address, the solicitation number, and the date and time offers are due.

B. An offer guarantee [X] is, [ ] is not required.

C. All offers are subject to the (1) work requirements, and (2) other provisions and clauses incorporated in the solicitation in full text or by reference.

D. Offers providing less than 90 calendar days for Government acceptance after the date offers are due will not be considered and will be rejected.

SOLICITATION, OFFER, AND AWARD (Continued)

(Construction, Alteration, or Repair)

OFFER ***(Must be fully completed by offeror)***

14. NAME AND ADDRESS OF OFFEROR *(Include ZIP Code)*	15. TELEPHONE NO. *(Include area code)*
	16. REMITTANCE ADDRESS *(Include only if different than Item 14)* **See Item 14**
CODE / FACILITY CODE	

17. The offeror agrees to perform the work required at the prices specified below in strict accordance with the terms of this solicitation, if this offer is accepted by the Government in writing within _____ calendar days after the date offers are due. *(Insert any number equal to or greater than the minimum requirements stated in Item 13D. Failure to insert any number means the offeror accepts the minimum in Item 13D.)*

AMOUNTS	SEE SCHEDULE OF PRICES

18. The offeror agrees to furnish any required performance and payment bonds.

19. ACKNOWLEDGMENT OF AMENDMENTS

(The offeror acknowledges receipt of amendments to the solicitation -- give number and date of each)

AMENDMENT NO.										
DATE										

20A. NAME AND TITLE OF PERSON AUTHORIZED TO SIGN OFFER *(Type or print)*	20B. SIGNATURE	20C. OFFER DATE

AWARD ***(To be completed by Government)***

21. ITEMS ACCEPTED:

22. AMOUNT	23. ACCOUNTING AND APPROPRIATION DATA

24. SUBMIT INVOICES TO ADDRESS SHOWN IN *(4 copies unless otherwise specified)*	**ITEM**	25. OTHER THAN FULL AND OPEN COMPETITION PURSUANT TO ☐ 10 U.S.C. 2304(c) ☐ 41 U.S.C. 253(c)
26. ADMINISTERED BY CODE		27. PAYMENT WILL BE MADE BY: CODE

CONTRACTING OFFICER WILL COMPLETE ITEM 28 OR 29 AS APPLICABLE

☐ 28. NEGOTIATED AGREEMENT *(Contractor is required to sign this document and return _ _ copies to issuing office.)* Contractor agrees to furnish and deliver all items or perform all work, requisitions identified on this form and any continuation sheets for the consideration stated in this contract. The rights and obligations of the parties to this contract shall be governed by (a) this contract award, (b) the solicitation, and (c) the clauses, representations, certifications, and specifications or incorporated by reference in or attached to this contract.

☐ 29. AWARD *(Contractor is not required to sign this document.)* Your offer on this solicitation, is hereby accepted as to the items listed. This award consummates the contract, which consists of (a) the Government solicitation and your offer, and (b) this contract award. No further contractual document is necessary.

30A. NAME AND TITLE OF CONTRACTOR OR PERSON AUTHORIZED TO SIGN *(Type or print)*		31A. NAME OF CONTRACTING OFFICER *(Type or print)* TEL: EMAIL:	
30B. SIGNATURE	30C. DATE	31B. UNITED STATES OF AMERICA BY	31C. AWARD DATE

Section 00010 - Solicitation Contract Form

SUPPLIES OR SERVICES AND PRICES/COSTS
SCHEDULE
DACA21-03-R-0015
MARINE CORPS RESERVE CENTER
HUNTER ARMY AIRFIELD, GEORIGA

TOTAL BASE BID (Items 0001 thru 0003)----------$_____

TOTAL BASE BID PLUS OPTIONS 1 THRU 7
(Items 0001 thru 0010)----------$_____

ITEM NO	SUPPLIES/SERVICES	QUANTITY	UNIT	UNIT PRICE	AMOUNT
0001		1	Lump Sum	XXXXXXXXXXXXX	$_____
	Base Bid Design effort, and engineering services during construction, including preparation of comprehensive interior design package, complete				

ITEM NO	SUPPLIES/SERVICES	QUANTITY	UNIT	UNIT PRICE	AMOUNT
0002		1	Lump Sum	XXXXXXXXXXXXX	$_____
	Base Bid Construction of Marine Corps Reserve Center, complete to 5 foot buidling line, complete				

ITEM NO	SUPPLIES/SERVICES	QUANTITY	UNIT	UNIT PRICE	AMOUNT
0003		1	Lump Sum	XXXXXXXXXXXXX	$_____
	Base Bid Site preparation and development including utilities (everything outside the 5 foot building line), complete				

ITEM NO	SUPPLIES/SERVICES	QUANTITY	UNIT	UNIT PRICE	AMOUNT
0004		1	Lump Sum	XXXXXXXXXXXXX	$_____
	Option 1 Loading ramp - See Drawing C-104				

ITEM NO	SUPPLIES/SERVICES	QUANTITY	UNIT	UNIT PRICE	AMOUNT
0005		1	Lump Sum	XXXXXXXXXXXXX	$_____
	Option 2 Weapons Cleaning Pad - See Drawing A-102				

ITEM NO	SUPPLIES/SERVICES	QUANTITY	UNIT	UNIT PRICE	AMOUNT
0006		1	Lump Sum	XXXXXXXXXXXXX	$_____
	Option 3 Bleachers in Drill Hall - See Drawing A-102 and Appendix "B"				

ITEM NO	SUPPLIES/SERVICES	QUANTITY	UNIT	UNIT PRICE	AMOUNT
0007		1	Lump Sum	XXXXXXXXXXXXX	$_____
	Option 4 Shelving - See Drawings A-102 and A-103 and Apenndix "B"				

ITEM NO	SUPPLIES/SERVICES	QUANTITY	UNIT	UNIT PRICE	AMOUNT
0008		1	Lump Sum	XXXXXXXXXXXXX	$_____
	Option 5 Oil Dispenser				

ITEM NO	SUPPLIES/SERVICES	QUANTITY	UNIT	UNIT PRICE	AMOUNT
0009		1	Lump Sum	XXXXXXXXXXXXX	$_____
	Option 6 Standing Seam Metal Roof System in lieu of shingle roof				

ITEM NO	SUPPLIES/SERVICES	QUANTITY	UNIT	UNIT PRICE	AMOUNT
0010		1	Lump Sum	XXXXXXXXXXXXX	$_____
	Option 7 Additional 35 parking spaces - See Drawing C-104				

CLAUSES INCORPORATED BY FULL TEXT

52.232-4001 COST LIMITATION – JUNE 1999

The contract award for design and construction shall not exceed $5,225,000.00 for this project. Offerors are under no obligation to approach this amount.

(End of Clause)

Section 00100 - Bidding Schedule/Instructions to Bidders

NOTICE TO OFFERORS

1. To better facilitate the evaluation of prices, all pricing modifications are to be submitted on copies of the latest schedules as published in the solocitation or the latest amendment thereto on the Internet. In lieu of indicating additions/deductions to contract line items (CLINS), all offerors should state their revised prices for each item. The company name should be indicated on the face of the schedule to preclude being misplaced.

2. Offerors mus insert a price on all numbered items of the Schedule. Failure to do so will disqualify the bid.

3. If a modification to an offer is submitted and provides for a lump-sum adjustment to the total estimated cost, the application of the lump-sum adjustment to each unit price and/or lump-sum price in the schedule must be stated. If it is not stated, the offeror agrees that the lump-sum adjustment shall be applied on a pro-rata basis to every CLIN on the schedule.

4. The field overhead costs through the contract duration are inclusive in the offered price for the contract, regardless of whether a compressed schedule is proposed.

5. The government may award a contract on the basis of initial proposals received without discussions (without the need for further offers); therefore, each proposal should contain the offerors best terms. If required, the Contracting Officer will opt to conduct a dynamic, anonymous, on-line reverse auction for all best and final offers. FreeMarkets will conduct the reverse auction for this solicitations best and final offers. FreeMarkets refers to such an auction as a Dynamic Bidding Event (DBE). During the DBE, Offerors will provide REVISED AND FINAL pricing through the submission of electronic offers via software that will be provided by FreeMarkets. FreeMarkets will explain this process in detail and train each qualified Offeror prior to the DBE. Instructions will be provided in the FreeMarkets Request for Proposal. The FreeMarkets main point of contact is Keith Nasse. Any questions regarding the online process should be directed to him via phone (412-297-8936) or email (knasse@freemarkets.com). The Contracting Officer reserves the right to conduct verbal or written discussions with respect to factors other than price with the Offerors at anytime prior to award.

6. HAND-CARRIED OR MAILED PROPOSALS:

All proposals must be clearly identified with the contractor's name and address. To ensure timely and proper handling, the lower left corner of the outermost wrapper should indicate the Request For Proposal No., Due Date of Proposal, Time by which Proposals are Due, and Title of Project.

The Government will not be responsible for proposals delivered to any location or to anyone other than those designated to receive proposals on its behalf as indicated below.

Proposals delivered by commercial carrier and those sent by U.S. Mail, including U.S. Express Mail, must be addressed as indicated below. Proposals shall not be addressed to any specific person.

U.S. Army Engineer District, Savannah
ATTN: CESAS-CT-C
100 West Oglethorpe Avenue
Savannah, Georgia 31401-3640

Proposals sent by U.S. Mail or delivered by commercial carrier must be received by mailroom personnel on the first floor of 100 West Oglethorpe Avenue by the time specified in Block 13 of the SF1442 for receipt of proposals.

Offerors are cautioned that proposals sent via United States Postal Service Express Mail are first delivered to the Savannah District Post Office Box instead of 100 West Oglethorpe Avenue, "the office designated for receipt of proposals" therefore, allow sufficient mailing time.

Hand-carried proposals also must be delivered to mailroom personnel on the first floor of 100 West Oglethorpe Avenue by the time specified in Block 13 of SF1442 for receipt of proposals.

Offerors are cautioned that there is no parking in or around the building, therefore, when hand delivering proposals sufficient time should be allowed for transporting of proposal packages from your vehicle to mailroom personnel.

7. FACSIMILE MODIFICATION OR PROPOSALS ARE NOT AUTHORIZED.

8. Quality Control System (QCS): Any contract award resulting from this solicitation will require the mandatory use of the automated Quality Control System. Please see Section 01312A for additional information.

9. PREPROPOSAL CONFERENCE

GENERAL: The Government will hold a preproposal conference at Hunter Army Airfield, Georgia on 5 June 2003 beginning at 1:00 PM in the Conference Room in Building 1201, located on the corner of Wilson and Lightening Street, Savannah, Georgia 31409 (easiest access is from the Stephenson/Wilson Gate). All Offerors are strongly encouraged to attend this conference. The conference will be conducted in two parts. In the first part, the Government will hold an information session, at which time the Government will explain the evaluation process and the key elements of the technical requirements. The Government will then conduct a site visit of the site designed for this project. Following the site visit, there will be a question and answer session.

QUESTIONS/ANSWERS: The Government requests that questions be provided in writing in advance of the conference. Questions may be submitted via e-mail to Ms. Anna de la Sierra Anne.delaSierra@stewart.army.mil or Mr. Tim Morris Timothy.C.Morris@sas02.usace.army.mil At the conference the Government will accept and attempt to answer additional written questions after advance questions have been addressed.

REGISTRATION: Contractors are requested to register prior to the conference by providing the name and firm for each attendee. This information should be submitted TO Anne.delaSierra@stewart.army.mil or by phone at (912)353-2371.

ENTERING HUNTER ARMY AIRFIELD: Contractors are to allow adequate time to process through security checkpoint.

ACCOMMODATIONS: Attendees are responsible for their own travel and hotel accommodations.

CLAUSES INCORPORATED BY FULL TEXT

52.204-6 DATA UNIVERSAL NUMBERING SYSTEM (DUNS) NUMBER (JUN 99)

(a) The offeror shall enter, in the block with its name and address on the cover page of its offer, the annotation "DUNS" followed by the DUNS number that identifies the offeror's name and address exactly as stated in the offer.

(b) If the offeror does not have a DUNS number, it should contact Dun and Bradstreet directly to obtain one. A DUNS number will be provided immediately by telephone at no charge to the offeror. For information on obtaining a DUNS number, the offeror, if located within the United States, should call Dun and Bradstreet at 1-800-333-0505. The offeror should be prepared to provide the following information:

(1) Company name.

(2) Company address.

(3) Company telephone number.

(4) Line of business.

(5) Chief executive officer/key manager.

(6) Date the company was started.

(7) Number of people employed by the company.

(8) Company affiliation.

(c) Offerors located outside the United States may obtain the location and phone number of the local Dun and Bradstreet Information Services office from the Internet Home Page at http://www.customerservice@dnb.com. If an offeror is unable to locate a local service center, it may send an e-mail to Dun and Bradstreet at globalinfo@mail.dnb.com.

(End of provision)

52.211-2 AVAILABILITY OF SPECIFICATIONS LISTED IN THE DOD INDEX OF SPECIFICATIONS AND STANDARDS (DODISS) AND DESCRIPTIONS LISTED IN THE ACQUISITION MANAGEMENT SYSTEMS AND DATA REQUIREMENTS CONTROL LIST, DOD 5010.12-L (DEC 1999)

Copies of specifications, standards, and data item descriptions cited in this solicitation may be obtained--

(a) From the ASSIST database via the Internet at http://assist.daps.mil; or

(b) By submitting a request to the--Department of Defense Single Stock Point (DoDSSP), Building 4, Section D, 700 Robbins Avenue, Philadelphia, PA 19111-5094, Telephone (215) 697-2667/2179, Facsimile (215) 697-1462.

(End of provision)

52.211-14 NOTICE OF PRIORITY RATING FOR NATIONAL DEFENSE USE (SEP 1990)

Any contract awarded as a result of this solicitation will be DO rated order certified for national defense use under the Defense Priorities and Allocations System (DPAS) (15 CFR 700), and the Contractor will be required to follow all of the requirements of this regulation.

(End of provision)

52.214-5000 APPARENT CLERICAL MISTAKES (MAR 1995)--EFARS

(a) For the purpose of initial evaluations of bids, the following will be utilized in the resolving arithmetic discrepancies found on the face of bidding schedule as submitted by the bidder:

(1) Obviously misplaced decimal points will be corrected;
(2) Discrepancy between unit price and extended price, the unit price will govern;
(3) Apparent errors in extension of unit prices will be corrected;
(4) Apparent errors in addition of lump-sum and extended prices will be corrected.

(b) For the purpose of bid evaluation, the government will proceed on the assumption that the bidder intends his bid to be evaluated on basis of the unit prices, the totals arrived at by resolution of arithmetic discrepancies as provided above and the bid will be so reflected on the abstract of bids.

(c) These correction procedures shall not be used to resolve any ambiguity concerning which bid is low.

(End of statement)

52.215-1 INSTRUCTIONS TO OFFERORS--COMPETITIVE ACQUISITION (MAY 2001)—ALTERNATE I (OCT 1997)

(a) Definitions. As used in this provision--

“Discussions” are negotiations that occur after establishment of the competitive range that may, at the Contracting Officer's discretion, result in the offeror being allowed to revise its proposal.

In writing, writing, or written” means any worded or numbered expression which can be read, reproduced, and later communicated, and includes electronically transmitted and stored information.

“Proposal modification” is a change made to a proposal before the solicitation's closing date and time, or made in response to an amendment, or made to correct a mistake at any time before award.

“Proposal revision” is a change to a proposal made after the solicitation closing date, at the request of or as allowed by a Contracting Officer as the result of negotiations.

“Time”, if stated as a number of days, is calculated using calendar days, unless otherwise specified, and will include Saturdays, Sundays, and legal holidays. However, if the last day falls on a Saturday, Sunday, or legal holiday, then the period shall include the next working day.

(b) Amendments to solicitations. If this solicitation is amended, all terms and conditions that are not amended remain unchanged. Offerors shall acknowledge receipt of any amendment to this solicitation by the date and time specified in the amendment(s).

(c) Submission, modification, revision, and withdrawal of proposals. (1) Unless other methods (e.g., electronic commerce or facsimile) are permitted in the solicitation, proposals and modifications to proposals shall be submitted in paper media in sealed envelopes or packages (i) addressed to the office specified in the solicitation, and (ii) showing the time and date specified for receipt, the solicitation number, and the name and address of the offeror. Offerors using commercial carriers should ensure that the proposal is marked on the outermost wrapper with the information in paragraphs (c)(1)(i) and (c)(1)(ii) of this provision.

(2) The first page of the proposal must show--

(i) The solicitation number;

(ii) The name, address, and telephone and facsimile numbers of the offeror (and electronic address if available);

(iii) A statement specifying the extent of agreement with all terms, conditions, and provisions included in the solicitation and agreement to furnish any or all items upon which prices are offered at the price set opposite each item;

(iv) Names, titles, and telephone and facsimile numbers (and electronic addresses if available) of persons authorized to negotiate on the offeror's behalf with the Government in connection with this solicitation; and

(v) Name, title, and signature of person authorized to sign the proposal. Proposals signed by an agent shall be accompanied by evidence of that agent's authority, unless that evidence has been previously furnished to the issuing office.

(3) Submission, modification, or revisions of proposals. (i) Offerors are responsible for submitting proposals, and any modifications, revisions, or withdrawals, so as to reach the Government office designated in the solicitation by the time specified in the solicitation. If no time is specified in the solicitation, the time for receipt is 4:30 p.m., local time, for the designated Government office on the date that proposal or revision is due.

(ii)(A) Any proposal, modification, or revision received at the Government office designated in the solicitation after the exact time specified for receipt of offers is “late” and will not be considered unless it is received before award is made, the Contracting Officer determines that accepting the late offer would not unduly delay the acquisition; and--

(1) If it was transmitted through an electronic commerce method authorized by the solicitation, it was received at the initial point of entry to the Government infrastructure not later than 5:00 p.m. one working day prior to the date specified for receipt of proposals; or

(2) There is acceptable evidence to establish that it was received at the Government installation designated for receipt of offers and was under the Government's control prior to the time set for receipt of offers; or

(3) It is the only proposal received.

(B) However, a late modification of an otherwise successful proposal that makes its terms more favorable to the Government, will be considered at any time it is received and may be accepted.

(iii) Acceptable evidence to establish the time of receipt at the Government installation includes the time/date stamp of that installation on the proposal wrapper, other documentary evidence of receipt maintained by the installation, or oral testimony or statements of Government personnel.

(iv) If an emergency or unanticipated event interrupts normal Government processes so that proposals cannot be received at the office designated for receipt of proposals by the exact time specified in the solicitation, and urgent Government requirements preclude amendment of the solicitation, the time specified for receipt of proposals will be deemed to be extended to the same time of day specified in the solicitation on the first work day on which normal Government processes resume.

(v) Proposals may be withdrawn by written notice received at any time before award. Oral proposals in response to oral solicitations may be withdrawn orally. If the solicitation authorizes facsimile proposals, proposals may be withdrawn via facsimile received at any time before award, subject to the conditions specified in the provision at 52.215-5, Facsimile Proposals. Proposals may be withdrawn in person by an offeror or an authorized representative, if the identity of the person requesting withdrawal is established and the person signs a receipt for the proposal before award.

(4) Unless otherwise specified in the solicitation, the offeror may propose to provide any item or combination of items.

(5) Offerors shall submit proposals in response to this solicitation in English, unless otherwise permitted by the solicitation, and in U.S. dollars, unless the provision at FAR 52.225-17, Evaluation of Foreign Currency Offers, is included in the solicitation.

(6) Offerors may submit modifications to their proposals at any time before the solicitation closing date and time, and may submit modifications in response to an amendment, or to correct a mistake at any time before award.

(7) Offerors may submit revised proposals only if requested or allowed by the Contracting Officer.

(8) Proposals may be withdrawn at any time before award. Withdrawals are effective upon receipt of notice by the Contracting Officer.

(d) Offer expiration date. Proposals in response to this solicitation will be valid for the number of days specified on the solicitation cover sheet (unless a different period is proposed by the offeror).

(e) Restriction on disclosure and use of data. Offerors that include in their proposals data that they do not want disclosed to the public for any purpose, or used by the Government except for evaluation purposes, shall--

(1) Mark the title page with the following legend: This proposal includes data that shall not be disclosed outside the Government and shall not be duplicated, used, or disclosed--in whole or in part--for any purpose other than to evaluate this proposal. If, however, a contract is awarded to this offeror as a result of--or in connection with-- the submission of this data, the Government shall have the right to duplicate, use, or disclose the data to the extent provided in the resulting contract. This restriction does not limit the Government's right to use information contained in this data if it is obtained from another source without restriction. The data subject to this restriction are contained in sheets [insert numbers or other identification of sheets]; and

(2) Mark each sheet of data it wishes to restrict with the following legend: Use or disclosure of data contained on this sheet is subject to the restriction on the title page of this proposal.

(f) Contract award. (1) The Government intends to award a contract or contracts resulting from this solicitation to the responsible offeror(s) whose proposal(s) represents the best value after evaluation in accordance with the factors and subfactors in the solicitation.

(2) The Government may reject any or all proposals if such action is in the Government's interest.

(3) The Government may waive informalities and minor irregularities in proposals received.

(4) The Government intends to evaluate proposals and award a contract after conducting discussions with offerors whose proposals have been determined to be within the competitive range. If the Contracting Officer determines that the number of proposals that would otherwise be in the competitive range exceeds the number at which an efficient competition can be conducted, the Contracting Officer may limit the number of proposals in the competitive range to the greatest number that will permit an efficient competition among the most highly rated proposals. Therefore, the offeror's initial proposal should contain the offeror's best terms from a price and technical standpoint.

(5) The Government reserves the right to make an award on any item for a quantity less than the quantity offered, at the unit cost or prices offered, unless the offeror specifies otherwise in the proposal.

(6) The Government reserves the right to make multiple awards if, after considering the additional administrative costs, it is in the Government's best interest to do so.

(7) Exchanges with offerors after receipt of a proposal do not constitute a rejection or counteroffer by the Government.

(8) The Government may determine that a proposal is unacceptable if the prices proposed are materially unbalanced between line items or subline items. Unbalanced pricing exists when, despite an acceptable total evaluated price, the price of one or more contract line items is significantly overstated or understated as indicated by the application of cost or price analysis techniques. A proposal may be rejected if the Contracting Officer determines that the lack of balance poses an unacceptable risk to the Government.

(9) If a cost realism analysis is performed, cost realism may be considered by the source selection authority in evaluating performance or schedule risk.

(10) A written award or acceptance of proposal mailed or otherwise furnished to the successful offeror within the time specified in the proposal shall result in a binding contract without further action by either party.

(11) The Government may disclose the following information in postaward debriefings to other offerors:

(i) The overall evaluated cost or price and technical rating of the successful offeror;

(ii) The overall ranking of all offerors, when any ranking was developed by the agency during source selection;

(iii) A summary of the rationale for award; and

(iv) For acquisitions of commercial items, the make and model of the item to be delivered by the successful offeror.

(End of provision)

52.216-1 TYPE OF CONTRACT (APR 1984)

The Government contemplates award of a Firm-Fixed Price contract resulting from this solicitation.

(End of clause)

52.217-5 EVALUATION OF OPTIONS (JUL 1990)

(a) Except when it is determined in accordance with FAR 17.206(b) not to be in the Government's best interests, the Government will evaluate offers for award purposes by adding the total price for all options to the total price for the basic requirement. Evaluation of options will not obligate the Government to exercise the option(s).

(b) The Government may reject an offer as nonresponsive if it is materially unbalanced as to prices for the basic requirement and the option quantities. An offer is unbalanced when it is based on prices significantly less than cost for some work and prices which are significantly overstated for other work.

(End of provision)

52.219-4001 SUBCONTRACTING PLAN FOR SMALL BUSINESS CONCERNS
(SEP 2002 CESAS-CT)

(a) In accordance with FAR Clause 52.219-9, large businesses must submit a subcontracting plan. A sample subcontracting plan is located in Section 00800.

(b) The subcontracting targets (expressed in terms of percentages of total planned subcontracting dollars) of the Savannah District are as follows:

Small Business	-	57.2%
Small Disadvantaged Business	-	8.9%
HUBZone Small Business		3.0%
Women-Owned Business	-	8.1%
Veteran-Owned Small Business		0%*
Service-Disabled Veteran-Owned Small Business	-	3.0%**

If you cannot reach the above-stated targets, you must provide written justification with your subcontracting plan detailing the reasons you cannot meet the requirements.

*(c) While Savannah District does not have a specific target for subcontracting with Veteran-Owned small businesses, this must be addressed in any subcontracting plan.

**(d) Service-disabled Veteran-owned Small Business (SD/VOSB) is a composite of Veteran-Owned Small Business. The SD/VOSB target must be included in the Veteran-Owned small business target.

52.222-23 NOTICE OF REQUIREMENT FOR AFFIRMATIVE ACTION TO ENSURE EQUAL EMPLOYMENT OPPORTUNITY FOR CONSTRUCTION (FEB 1999)

(a) The offeror's attention is called to the Equal Opportunity clause and the Affirmative Action Compliance Requirements for Construction clause of this solicitation.

(b) The goals for minority and female participation, expressed in percentage terms for the Contractor's aggregate workforce in each trade on all construction work in the covered area, are as follows:

Goals for minority participation for each trade	Goals for female participation for each trade
30.6%	6.9%

These goals are applicable to all the Contractor's construction work performed in the covered area. If the Contractor performs construction work in a geographical area located outside of the covered area, the Contractor shall apply the goals established for the geographical area where the work is actually performed. Goals are published periodically in the Federal Register in notice form, and these notices may be obtained from any Office of Federal Contract Compliance Programs office.

(c) The Contractor's compliance with Executive Order 11246, as amended, and the regulations in 41 CFR 60-4 shall be based on (1) its implementation of the Equal Opportunity clause, (2) specific affirmative action obligations required by the clause entitled "Affirmative Action Compliance Requirements for Construction," and (3) its efforts to meet the goals. The hours of minority and female employment and training must be substantially uniform throughout the length of the contract, and in each trade. The Contractor shall make a good faith effort to employ minorities and women evenly on each of its projects. The transfer of minority or female employees or trainees from Contractor to Contractor, or from project to project, for the sole purpose of meeting the Contractor's goals shall be a violation of the contract, Executive Order 11246, as amended, and the regulations in 41 CFR 60-4. Compliance with the goals will be measured against the total work hours performed.

(d) The Contractor shall provide written notification to the Deputy Assistant Secretary for Federal Contract Compliance, U.S. Department of Labor, within 10 working days following award of any construction subcontract in excess of $10,000 at any tier for construction work under the contract resulting from this solicitation. The notification shall list the --

(1) Name, address, and telephone number of the subcontractor;

(2) Employer's identification number of the subcontractor;

(3) Estimated dollar amount of the subcontract;

(4) Estimated starting and completion dates of the subcontract; and

(5) Geographical area in which the subcontract is to be performed.

(e) As used in this Notice, and in any contract resulting from this solicitation, the "covered area" is Georgia, Chatham County, Savannah.

(End of provision)

52.225-10 NOTICE OF BUY AMERICAN ACT REQUIREMENT--CONSTRUCTION MATERIALS (MAY 2002)

(a) Definitions. Construction material, domestic construction material, and foreign construction material, as used in this provision, are defined in the clause of this solicitation entitled “Buy American Act--Construction Materials” (Federal Acquisition Regulation (FAR) clause 52.225-9).

(b) Requests for determinations of inapplicability. An offeror requesting a determination regarding the inapplicability of the Buy American Act should submit the request to the Contracting Officer in time to allow a determination before submission of offers. The offeror shall include the information and applicable supporting data required by paragraphs (c) and (d) of the clause at FAR 52.225-9 in the request. If an offeror has not requested a determination regarding the inapplicability of the Buy American Act before submitting its offer, or has not received a response to a previous request, the offeror shall include the information and supporting data in the offer.

(c) Evaluation of offers. (1) The Government will evaluate an offer requesting exception to the requirements of the Buy American Act, based on claimed unreasonable cost of domestic construction material, by adding to the offered

price the appropriate percentage of the cost of such foreign construction material, as specified in paragraph (b)(3)(i) of the clause at FAR 52.225-9.

(2) If evaluation results in a tie between an offeror that requested the substitution of foreign construction material based on unreasonable cost and an offeror that did not request an exception, the Contracting Officer will award to the offeror that did not request an exception based on unreasonable cost.

(d) Alternate offers.

(1) When an offer includes foreign construction material not listed by the Government in this solicitation in paragraph (b)(2) of the clause at FAR 52.225-9, the offeror also may submit an alternate offer based on use of equivalent domestic construction material.

(2) If an alternate offer is submitted, the offeror shall submit a separate Standard Form 1442 for the alternate offer, and a separate price comparison table prepared in accordance with paragraphs (c) and (d) of the clause at FAR 52.225-9 for the offer that is based on the use of any foreign construction material for which the Government has not yet determined an exception applies.

(3) If the Government determines that a particular exception requested in accordance with paragraph (c) of the clause at FAR 52.225-9 does not apply, the Government will evaluate only those offers based on use of the equivalent domestic construction material, and the offeror shall be required to furnish such domestic construction material. An offer based on use of the foreign construction material for which an exception was requested--

(i) Will be rejected as nonresponsive if this acquisition is conducted by sealed bidding; or

(ii) May be accepted if revised during negotiations.

(End of provision)

52.232-4006 SUBJECT TO AVAILABILITY OF FUNDS STATEMENT (SEP 1999 SASCT) (Ref. AFARS 5101.602-2)

This is a high priority requirement as defined in Army Federal Acquisition Regulation (AFAR) Supplement 5101.602-2. Subject to the availability of funds, the accounting classification will be 21 3 2050 308 8021 P7000 3230 S09133. This statement is not a commitment of funds. Funds are not presently available for this acquisition. No contract award will be made until appropriated funds are made available from which payment for contract purposes can be made.
(End of provision)

52.233-2 SERVICE OF PROTEST (AUG 1996)

(v) Protests, as defined in section 33.101 of the Federal Acquisition Regulation, that are filed directly with an agency, and copies of any protests that are filed with the General Accounting Office (GAO), shall be served on the Contracting Officer (addressed as follows) by obtaining written and dated acknowledgment of receipt from

District Engineer
U.S. Army Engineer District, Savannah
ATTN: CESAS-CT-C
100 West Oglethrope Avenue
Savannah, Georgia 31401-3640

(b) The copy of any protest shall be received in the office designated above within one day of filing a protest with the GAO.

(End of provision)

52.236-27 SITE VISIT (CONSTRUCTION) (FEB 1995)

(a) The clauses at 52.236-2, Differing Site Conditions, and 52.236-3, Site Investigations and Conditions Affecting the Work, will be included in any contract awarded as a result of this solicitation. Accordingly, offerors or quoters are urged and expected to inspect the site where the work will be performed.

(b) An organized site visit has been scheduled for:

PREPROPOSAL CONFERENCE

GENERAL: The Government will hold a preproposal conference at Hunter Army Airfield, Georgia on 5 June 2003 beginning at 1:00 PM in the Conference Room in Building 1201, located on the corner of Wilson and Lightening Street, Savannah, Georgia 31409 (easiest access is from the Stephenson/Wilson Gate). All Offerors are strongly encouraged to attend this conference. The conference will be conducted in two parts. In the first part, the Government will hold an information session, at which time the Government will explain the evaluation process and the key elements of the technical requirements. The Government will then conduct a site visit of the site designed for this project. Following the site visit, there will be a question and answer session.

QUESTIONS/ANSWERS: The Government requests that questions be provided in writing in advance of the conference. Questions may be submitted via e-mail to Ms. Anna de la Sierra Anne.delaSierra@stewart.army.mil or Mr. Tim Morris Timothy.C.Morris@sas02.usace.army.mil At the conference the Government will accept and attempt to answer additional written questions after advance questions have been addressed.

REGISTRATION: Contractors are requested to register prior to the conference by providing the name and firm for each attendee. This information should be submitted TO Anne.delaSierra@stewart.army.mil or by phone at (912)353-2371.

ENTERING HUNTER ARMY AIRFIELD: Contractors are to allow adequate time to process through security checkpoint.

ACCOMMODATIONS: Attendees are responsible for their own travel and hotel accommodations

(End of provision)

52.236-4011 Disclosure of Magnitude of Construction (FAR 36.204 and DFARS 236.204)

The estimated price range for this project is between $5,000,000 and $10,000,000. .

Section 00110

PROPOSAL SUBMISSION REQUIREMENTS AND INSTRUCTIONS

1. PROPOSAL OVERVIEW.

1.1 General. In as much as the proposal will describe the capability of the offeror to perform any resultant contract, as well as describe its understanding of the requirements of the Statement of Work, it should be specific and complete in every detail. The proposal should be prepared simply and economically, providing straight-forward, concise delineation of capabilities to satisfactorily perform the contract being sought. The proposal should therefore be practical, legible, clear and coherent.

1.1.1 Project Description. The project consists of the design, permitting, site preparation and construction of a new Marine Corps Reserve Center to support the operations and training requirements of a Beach and Terminal Operations (BTO) Company. Primary Facility components include a Reserve Training Area, a Vehicle Maintenance Shop, and a Parachute/Survival Equipment Shop. The Reserve Training Area is used for training, administration, and storage, and consists primarily of offices, classrooms, supply storage, weapons storage, restrooms, locker rooms, and a drill hall. The Vehicle Maintenance Shop consists primarily of offices, vehicle maintenance bays, parts and battery storage, and a tool room. The Parachute/Survival Equipment Shop is used for maintaining and storing parachutes and consists primarily of parachute storage areas, pallet storage, parachute inspection, maintenance, and packing areas, a parachute drying tower, and an office. Supporting requirements include pavements for parking and drives, information systems, all utilities, Anti-terrorism and Force Protection considerations, and landscaping.

1.2 Proposal Submissions and the Two (2) Phase Design-Build Process. This process requires potential contractors to submit their performance and capability information initially (Phase 1) for review and consideration by the Government. Following the review, evaluation, and rating of these proposals, the Government will select up to five of the highest rated contractors to receive the technical requirements package and provide a technical and cost proposal for consideration by the Government at Phase 2. The technical and cost proposals of the selected contractors, will be reviewed by the Government. The technical information contained in this Phase 2 proposal will be reviewed and evaluated by the Government in accordance with the evaluation criteria set out in Section 00120 – PART 2, PHASE 2 EVALUATION MANUAL. The final evaluation rating used for comparison, selection, and award will reflect both the rating received in Phase 1 and the evaluation rating received in Phase 2. Cost information will not be rated in either phase but will be evaluated in response to the funding limitations set out in Section 00010 – PRICE PROPOSAL SCHEDULE and other offeror's price proposals.

1.3 FOR ALL THOSE CONTRACTORS WHO COMPETE IN BOTH PHASE 1 AND PHASE 2, THE CONTRACTOR'S PROPOSAL SHALL BE DEFINED AS ALL INFORMATION WHICH WAS SUBMITTED IN RESPONSE TO THE REQUIREMENTS OF BOTH PHASES OF THE SOLICITATION.

1.4 Compliance Statement: The Offerors selected to compete in Phase 2 are required to certify that all items submitted in its technical proposal comply with the RFP requirements and any differences, deviations or exceptions have been identified and explained. Offerors are required to complete the statement and submit it with their technical proposal. Even if there are no differences, deviations or exceptions, the Offeror must submit the Compliance Statement and state that none exist.

Statement of Compliance

[*Insert name of the offeror*] hereby certifies that all items submitted in this proposal and final design documents (after contract award) comply with the solicitation requirements. The criteria specified in Request for Proposal No. [*Insert RFP Number*] are binding contract criteria and in case of any conflict after award, between [*Insert RFP Number*] and the contractor's proposal, the Request for Proposal criteria shall govern unless there is a written and signed agreement between the contractor and the Government waiving a specific requirement. Should this proposal result in the award of a contract. this statement will be included on each sheet of drawings and on the cover of the specifications.

1.5 Exceptions. Exceptions to the contractual terms and conditions of the solicitation (e.g., standard company terms and conditions) must not be included in the proposal.

2. PHASE 1 PROPOSAL SUBMISSION INSTRUCTIONS

2.1 Who May Submit.

2.1.1 Proposals may be submitted by firms formally organized as design/build entities, or by design firms and construction contractors that have associated specifically for this project. In the latter case, a single design firm or construction contractor may offer more than one proposal by entering into more than one such association. For the purpose of this solicitation, no distinction is made between formally organized design/build entities and project-specific design/build associations. Both are referred to as the design/build offeror, (or simply "Offeror"), or the design/build contractor, (or simply "Contractor"), after award of a contract.

2.1.2 Any legally organized Offeror may submit a proposal.

2.2 Where to Submit. Offerors shall submit their proposal packages to the Savannah District at the address shown in Block 7 of Standard Form 1442.

2.3 Submission Deadline. Proposals shall be received by the Savannah District no later than the time and date specified in Block 13 of Standard Form 1442.

2.4 General Requirements.

2.4.1 In order to effectively and equitably evaluate all proposals, the Contracting Officer must receive information sufficiently detailed to allow review and evaluation by the Government.

2.4.2 Tabs. Proposal shall be organized and tabbed as shown.

2.4.3 Size of Printed Matter Submissions.

2.4.3.1 Written materials shall be on 8-1/2" x 11" paper.

2.4.3.2 The proposals shall contain a detailed table of contents. If more than one binder is used, the complete table of contents shall be included in each. Any materials submitted but not required by this solicitation, (such as company brochures), shall be relegated to appendices.

2.4.4 Number of Copies. Offerors shall submit six (6) hard copies of their Phase One Proposal.

2.4.5 Electronic Copy of Submissions. In addition to the hard copies of the proposal, Offerors shall also submit the Phase 1 Proposal on a CD ROM disk. The proposal should be in MS Word, Adobe Acrobat PDF file, or WordPerfect format. The electronic version shall be either a single file tabbed in the same order as the hard copy or multiple files hyperlinked to a single table of contents.

2.5 Submission Format.

2.5.1 The Phase One Proposal will be tabbed and submitted in a three ring binder in the following format:

PHASE 1 PROPOSAL

TAB A

- SF 1442
- Section 00600 – Representations and Certifications
- PROPOSAL DATA SHEET – include Offeror's DUNS # and A-E ACASS ID # and Contractor's CCASS #

TAB B – FACTOR 1-1 Offeror Past Performance on Recent Relevant Projects Information

- PAST PERFORMANCE ON RECENT RELEVANT PROJECTS INFORMATION Sheets

TAB C – FACTOR 1-2 Technical Approach Narrative

TAB D – FACTOR 1-3 Individual Recent Relevant Specialized Experience

- CORPORATE RELEVANT SPECIALIZED EXPERIENCE Sheets (Example Projects)

TAB E – FACTOR 1-4 Offeror Sustainable Design Experience

- SUSTAINABLE DESIGN EXPERIENCE Sheets (Example Projects)

TAB F - Other Information

2.6 TAB B – FACTOR 1-1 Offeror Past Performance on Recent Relevant Projects. A sample Past Performance of Recent Relevant Project Evaluation Questionnaire is included at the end of this section. The offeror shall identify the three completed (or substantially complete) recent relevant projects to be used for reference and evaluation purposes and provide a questionnaire to the Point of Contact for each project listed for completion. When the Offeror is made up of separate construction and design companies, three evaluations should be completed for each of the two primary design and construction companies. When completed, these forms shall be mailed, faxed or e-mailed to the Savannah District Contract Specialist identified in the sample transmittal letter provided. It is the contractor's responsibility to ensure that the reference documentation is provided. The Government may not make additional requests for Past Performance of Recent Relevant Project Evaluation Questionnaires from the references. Copies of the evaluation form shall be provided to the Savannah District directly from the reference. Projects from which questionnaires are received shall have been completed (or substantially completed) within three years of the date of the solicitation. The Government may contact sources other than those provided by the Offeror for information with respect to past performance. These other sources may include CCASS (Construction Contractor Appraisal Support System), ACASS (Architect-Engineer Contractor Appraisal Support System), telephone interviews with organizations familiar with the Offeror's performance, and Government personnel with personal knowledge of the Offeror's performance capability. In addition to the questionnaires provided by third party points of contact, the Offeror should also provide information on the recent relevant past performance projects in accordance with the sample information sheet attached. Provide no more than 10 projects that have been completed

(or substantially completed) within the last three years. If the offeror is made up of separate construction and design companies, provide no more than 10 for each. Three of the ten must be the projects for which questionnaires were sent to third parties. Indicate in the space provided on the information sheet which projects had questionnaires sent out. Include all of the information sheets under this TAB.

2.7 TAB C – FACTOR 1-2 Technical Approach Narrative. Describe in general terms how the offeror will approach the design and construction of these facilities. Technical Approach Narrative shall be limited to a maximum of ten (10) typewritten pages, 12 pitch, and double spaced**.** At a minimum the narrative should address the following:

- Does the Offeror demonstrate a suitable understanding of the process to enable it to adequately address and anticipate the risks associated with Design/Build processes?
- The roles and responsibilities of the various sub-contractors for both design and construction shall be addressed.
- How does the Offeror continue the design phase of the project and incorporate User comments and reviews into the process?
- The Offeror's Design Quality Control Program shall be briefly described.
- What is the design team's involvement throughout the construction period?
- How does the Offeror integrate construction subcontractors into the design process?
- What are the Offeror's processes for handling construction and design problems.

Offerors are cautioned that this narrative shall not exceed ten (10) pages and that the Government review staff will review and evaluate only the information contained on the first ten pages in this section.

2.8 TAB D – FACTOR 1-3 Individual Recent Relevant Specialized Experience. Provide examples (at least three per individual) of projects for which the offeror's Key Individuals to be used on the project in this solicitation have been responsible. The examples should be as similar as possible to this solicitation in project type/function, size, and cost. Provide references (with contract names and telephone numbers) for all examples cited. Each example shall indicate the general character, scope, location, cost, and date of completion of the project. It shall also include the key individual's role and career experience information or resume. Example projects must have been completed not earlier than five years prior to the date of the solicitation. The resumes and levels of responsibility of these key personnel who will be directly responsible for the day-to-day design and construction activities will be evaluated. Data should indicate whether each individual has had a significant part in any of the project examples cited in TAB B. If reassignment of personnel is considered possible, Specialized Experience Sheets of one alternative professional – for each assignment where a change is possible – will be submitted and evaluated. If any alternative sheets are submitted, distinguish between the primary and the alternative member. In addition to an individual's experience and qualifications, consideration will also be given to the length of time that an individual has been a member of the Offeror's team. Additional consideration will be given to individuals who have past experience with Corps of Engineers construction project operations and who have completed the Corps sponsored Quality Control Class. See sample information sheet attached. For this solicitation, key individuals are:

- Project Manager
- Project Architect

- On Site Construction Superintendent
- Construction Quality Control Manager
- Design Quality control Manager

2.9 TAB E – FACTOR 1-4 Offeror Sustainable Design Experience. Provide examples of at least two projects for which the Offeror has been responsible and which included sustainable features. Specific experience in LEED/SPIRIT application will be given more favorable consideration. Provide references (with contract names and telephone numbers) for all examples cited. Each example shall indicate the general character, scope, location, cost, and date of completion of the project. Each example shall also indicate what sustainable features the project included, a quantification of the results as applicable (i.e. "diverted 25% of construction waste") and the role(s) the Offeror had in the accomplishment of each sustainable goal. If the Offeror represents the combining of design and construction companies for the purpose of this RFP, each of the primary design and construction companies shall both list two project examples. Example projects must have been completed not earlier than three years prior to the date of the solicitation. See sample sheets attached.

2.10 No cost information shall be included in the Phase 1 proposal package.

3. PHASE 2 PROPOSAL SUBMISSION INSTRUCTIONS

3.1 Who May Submit. Proposals may be submitted by the Offerors who receive written notification from the Savannah District Contracting Officer that their firm has been selected to participate in Phase 2 of this solicitation. No more than five Offerors will compete in Phase 2 under typical circumstances. The Government intends to announce the names of Offerors selected for Phase 2 in the FEDBIZOPS website unless an Offeror provides written notification and explanation for not wanting this information released.

3.2 General Requirements.

3.2.1 Title Page. Include the title of the solicitation, solicitation number, Offeror name, and date of the submittal.

3.2.2 Table of Contents. The proposals shall contain a detailed table of contents. If more than one binder is used, the complete table of contents shall be included in each. Any materials submitted but not required by this solicitation, (such as company brochures), shall be relegated to appendices.

3.2.3 Tabs. Proposal shall be organized and tabbed as shown.

3.2.4 Size of Printed Matter Submissions.

3.2.4.1 Written materials: 8-1/2" x 11" format.

3.2.5.2 Drawing sheets:

3.2.5.2.1 Offerors shall submit one set of full size drawings(30" x 42").

3.2.5.2.2 Offerors shall submit five half size sheets(15" x 21").

3.2.5.3.3 Drawings shall be bound.

3.2.5.3.4 Drawings submitted for the proposal may be done with any CAD software available to the Offeror. However, the drawings for 60% and Final design submittals will be done and submitted in the latest version of

Microstation format only. Conversions from AutoCAD are discouraged because of file incompatibility and the added work necessary for the conversion.

3.2.5.4 Electronic Submission. In addition to the hard copies required above, all Offerors that advance to Phase 2 shall submit on a CD-ROM their complete submittal. This includes the Phase One Submission and the Phase Two Submission (Volumes I and II) including all drawings. Written portions of the proposal should be in MS Word, Adobe Acrobat PDF, or WordPerfect format. The electronic version shall be either a single file tabbed in the same order as the hard copy or multiple files hyperlinked to a single table of contents. Drawings should be in one of the following formats: Microstation DGN, Adobe Acrobat PDF, Max View CAL (with Sendable INDEX.SVD), or Auto Cad DWG. Any portion of the proposal not available in electronic format, i.e. cut sheets, should be scanned in Adobe Acrobat PDF format. The CD ROM must be clearly labeled by solicitation number, project name, installation, and Offeror's name.

3.3 PHASE 2 PROPOSAL, VOLUME I – Contract Requirements & Price Proposal

3.3.1 Submit original and one (1) copy of VOLUME I - Contract Requirements & Price Proposal. This information shall be submitted in separate three-ring binders labeled "Contract Requirements & Price Proposal."

3.3.2 Volume I – CONTRACT REQUIREMENTS & PRICE PROPOSAL shall be organized as follows:

VOLUME I - Contract Requirements & Price Proposal

TAB A – Standard Form 1442, completed and signed by an authorized person from the company or team.

TAB B – Proposal Schedule “Supplies or Services Price/Cost”

TAB C – Bid Bond

TAB D – Section 00600 – Representations and Certifications .

TAB E – Financial Information (e.g. latest financial statement, annual reports, Dun & Bradstreet Ratings, and or number, etc.)

TAB F – Statement of Compliance (See paragraph 1.4)

3.4 PHASE 2 PROPOSAL, VOLUME II – Technical information.

3.4.1 Number of copies. Offerors shall submit six (6) copies of VOLUME II of their Phase 2 Proposal and six (6) half-size copies of all drawings and one (1) full-size copy of all drawings.

3.4.2 This information shall be submitted in separate three-ring binders labeled "Technical Information." This category consists of design documents, drawings, sketches, outline specifications, design analysis, catalog cuts, and other information.

3.4.3 VOLUME II – TECHNICAL INFORMATION shall be organized as follows:

VOLUME II – TECHNICAL INFORMATION

TAB A – BETTERMENTS

TAB B – FACTOR 2-1: BUILDING FUNCTION AND AESTHETICS

TAB C – FACTOR 2-2: BUILDING SYSTEMS

TAB D – FACTOR 2-3: SITE DESIGN CONSIDERATIONS

TAB E – FACTOR 2-4: SUSTAINABLE DESIGN CONSIDERATIONS

TAB F – FACTOR 2-5: OFFEROR MANAGEMENT PLANS AND SCHEDULES

TAB G – Any other information provided by the Offeror

DRAWINGS (Minimum drawings required are outlined in each section)

3.4.4 The technical data described in Paragraphs 4 through 9 below shall be submitted as part of the formal proposal. All alternate designs shall be graphically described on separate drawings from the basic proposal. Offerors are advised that the required data listed below will be utilized for technical review and evaluation and used for determination of a "Quality Rating" by a Technical Evaluation Team. Materials indicated in the design/construction criteria, but not indicated in the Offeror's specifications, will be assumed to be included and a part of the proposal.

3.4.5 Incomplete proposals. Failure to submit all the data indicated in this section may be cause for determining a proposal incomplete and, therefore, not considered for technical evaluation in Phase 2, or for subsequent award.

4. TAB A – BETTERMENTS

4. 1 Definition of Betterments. A “Betterment” is defined as any component or system, which meets and exceeds the minimum requirements stated in the Request for Proposal. This includes all proposed betterments listed in accordance with the “Proposal Submission Requirements” of this TAB, and all Government identified betterments.

4.2 During discussions, the Government may request that betterments be removed from the Offeror’s proposal in order to reduce costs.

4.3 The minimum requirements of the contract are identified in the Request for Proposal. All betterments offered in the proposal become a requirement of the awarded contract.

4.4 Submission of Betterments. The Offeror shall identify “Betterments” in the following manner:

- Short descriptive title of the betterment and how it exceeds RFP requirements.
- Narrative of the proposed betterment and rationale as to why it has been included.
- Reference in the Offeror’s proposal where the betterment is shown or specified.
- Estimated value of the betterment.

5. TAB B – FACTOR 2-1: BUILDING FUNCTION AND AESTHETICS

5.1 Architectural Narrative. State the proposed image or design theme of this proposal. Describe interior design theme. Describe any special features or finishes that contribute to the proposed design theme. Describe construction of typical interior partitions. List any architectural deviations from the minimum RFP requirements that are included in the proposal. Also state whether the Building exterior materials and appearance is in compliance with the Installation Design Guide.

5.2 Certifications.

5.2.1 "U" Value Certification. Provide signed and dated certification that the final design shall meet "U" values required in the RFP for each exterior wall assembly and roof assemblies.

5.2.2 Mechanical Room Certification. Provide signed and dated certification that the mechanical room is of sufficient size to accommodate, serve, and eventually replace all mechanical equipment shown and specified by the mechanical design.

5.3 Architectural Drawings. Drawings shall be provided in sufficient detail for reviewers to visualize how the designer has interpreted the RFP functional and operational requirements in his proposal. Drawings shall include, but not be limited to, the following:

5.3.1 Floor Plan(s). Floor plans for each floor shall be drawn accurately to scale and shall be shown at 1/8 " = 1'-0" minimum scale unless otherwise noted. Show gross floor area tabulations on lower portion of plate. Label all spaces. Indicate net area of all spaces. Show all doors, windows, plumbing fixtures, toilet partitions and built-in casework. Show required workstations as dashed-line blocks to demonstrate that the spaces accommodate the required workstations. Show overall building dimensions. If the floor plan(s) must be drawn in segments in order to comply with the requirements on the proper scale, provide a separate 1/16"=1'-0" or smaller scale composite floor plan showing exterior walls, interior partitions, circulation elements and cross referencing for enlarged floor plans.

5.3.2 Building Elevations. Exterior elevations shall be drawn to 1/8"=1'-0" scale for all four major building elevations. If elevations must be drawn in segments in order to comply with the requirements on proper scale, provide separate 1/16"=1'-0" or smaller composite elevations as required to fit on one sheet. Elevations shall show all windows, doors, canopies, and platforms. All building exterior materials and roof pitches shall be noted clearly.

5.3.3 Typical Wall Section. Provide one exterior wall section for each different exterior wall type indicating the exterior wall and wall/roof intersection condition. Show overall wall thickness and eave height. Note all materials. Wall section shall be unbroken where practical and drawn at ¾"= 1'-0" scale.

5.3.4 Roof Plan. Roof plans for the building shall be drawn accurately to scale and shall be shown at least 1/16 " = 1'-0" minimum scale unless otherwise noted. All roof slopes shall be indicated.

5.3.5 Roof Bid Option. If a bid option exists for an alternative roof, provide any information required by paragraphs 5.3.2 through 5.3.6 of this TAB for the alternative roof if that information differs from the Base Bid roof information..

5.3.6 Exterior Colors. Describe the concept for the exterior color scheme and how it relates to the Installation Design Guide.

6 TAB C – FACTOR 2-2: BUILDING SYSTEMS

6.1. STRUCTURAL SUBMITTAL REQUIREMENTS. The structural portion of the proposal must outline the proposed methods and materials of design and construction. The submittal shall include the following:

6.1.1 Structural Narrative. Provide a general description of the scope of the project and all of the major structures. Give overall building dimensions and a description of the principal features such as wall and roof construction proposed. If the building is irregularly shaped, explain where seismic joints will be placed to create regular shapes or provide a statement that a dynamic analysis of the building will be performed.

6.1.1.1 Provide a description of the framing system chosen.

6.1.1.2 Provide a description of the lateral load resisting system and how these loads will be transmitted to the foundations.

6.1.1.3 Provide a description of the anticipated foundations based on information provided in the RFP.

6.1.1.4 Provide a list of special design features including features to be used in compliance with the Anti-terrorism/Force Protection requirements.

6.1.2 Fire Resistance Statement. State the required fire resistance criteria for all portions of the structural system and the proposed method of meeting these requirements.

6.2 MECHANICAL SUBMITTAL REQUIREMENTS.

6.2.1 Heating, Ventilating, and Air Conditioning Narrative. Narrative of design analysis will contain the following:

6.2.1.1 Design conditions used in calculations - inside and outside temperatures, personnel load, outside air or ventilation requirements, U-factors, and other special conditions.

6.2.1.2 Block loads for heating and cooling shall be provided and calculated using ASHRAE-based methods. Where passive solar applications prove feasible and cost effective, the Offeror shall employ a load calculation method that can incorporate all applicable passive solar factors. All load calculation software must be traditionally used by the industry.

6.2.1.3 A description of all HVAC systems to be considered in a life cycle cost analysis (LCCA). A LCCA, using the program LCCID, of each of the HVAC systems described shall be submitted by the successful contractor – after contract award, verifying that the system selected for the building is the most efficient and is within the energy budget. For additional requirements, see Section 01020.

6.2.1.4. A description of piping systems including type of pipe, insulation requirements, and whether concealed or exposed.

6.2.1.5 **Controls System Narrative.** A description of the proposed Direct Digital Controls System to be used.

6.2.2 Plumbing Narrative. Plumbing analysis to determine number of fixture units, cold and hot water capacity requirements, and equipment or capacities of miscellaneous and special systems.

6.2.2.1 Fixture determination listing quantity and type of fixtures for both men's and women's toilets, and other fixtures such as drinking water fountains, service sinks, etc.

6.2.2.2 Description of domestic water heating and storage equipment, including capacity, type (gas, electric, boiler, water), materials, and insulation.

6.2.2.3 Piping types and location (concealed or exposed), together with material proposed and insulation requirements.

6.2.2.4. Brief description of miscellaneous systems such as compressed air (capacity, pressure, piping, location of air outlets, etc.), roof drainage, natural gas (pressure, quantity, and equipment to be served), and other special systems.

6.2.3 Mechanical Drawings. Provide plan view showing the following:

6.2.3.1 Heating, Ventilating, and Air Conditioning Drawings. Heating, ventilating, and air conditioning equipment layout - chillers or refrigeration compressors, boilers, pumps, condensers or cooling tower, air handling units, fans, hoods, and other items of major equipment required for the facility. A ductwork layout is not required.

6.2.3.2 Plumbing Drawings. Plumbing fixture layout, floor and area drains, and plumbing equipment layout (hot water generator, storage tank, air compressors, etc.).

6.2.3.3 Mechanical Room(s) Drawings. Provide a 1/4 inch = 1 foot scale (1:50) plan showing equipment layout of major components in mechanical rooms. The Engineer/ Architect of record will be required to certify that adequate space has been provided for safe operation of equipment, maintenance capability, and eventual replacement. Mechanical equipment layouts shall comply with Section 01020.

6.3 ELECTRICAL SUBMITTAL REQUIREMENTS.

6.3.1 Interior Electrical System Design Narrative. Provide an overview of the interior electrical design describing the major features of the power, lighting, communication and security systems.

6.3.2 Interior Electrical Distribution. For typical areas within the various buildings, describe the type of power and communication wiring systems proposed (e.g., cable tray, rigid metallic conduit, rigid nonmetallic conduit, electrical metallic tubing, nonmetallic-sheathed cable).

6.3.3 Interior Electrical Drawings. Provide lighting, power and signal plans. The plans shall indicate locations of devices and fixtures only; no wiring shall be shown. Fixtures shall be marked to correlate to the Interior Concept Lighting Schedule.

6.3.4 Exterior Electrical Distribution System Design Narrative. Provide an overview of the exterior electrical design describing the major features of the power, lighting and communication systems.

6.3.5 Exterior Electrical Drawings. Provide a separate electrical site plan indicating all existing to be removed, existing to remain, and new utility lines and equipment required to serve the project. Utility lines shown shall include electrical power lines, telephone and other communication lines. The plan shall also show all buildings, trees, roads and driveways, parking areas, and any other items necessary for functional and operating adequacy. Indicate the connection points and the approximate routing of lines through the site. Indicate the locations of transformers, switches and cable termination cabinets. Also indicate on the drawings the lighting fixture type proposed within each area (no layout is required).

6.3.6 Energy Conservation Design Narrative. Energy conservation measures shall be indicated. The narrative shall describe measures and techniques that are proposed in the electrical design that will conserve energy.

6.4 FIRE PROTECTION SUBMITTAL REQUIREMENTS.

6.4.1. Fire Protection Narrative. A narrative will be provided addressing the following items for each building type in this project:

6.4.1.1 Automatic fire extinguishing systems and hose standpipe systems: Identification of all areas provided with sprinkler protection and the type of sprinkler system provided, sprinkler hazard classification for these areas, areas

protected by other automatic suppression systems and the type system provided, and buildings provided with hose standpipe systems and the type of standpipe system provided and indication if a fire pump is required and where the pump will be located.

6.4.1.2 The type of alarm and detection system, location of the fire alarm and detection equipment including fire alarm control panel, and catalog data sheets of major components

6.4.2 Credentials of Fire Protection Engineer. Provide the credentials of the fire protection engineer in the proposal submittal. The design of the fire protection features shall be by a qualified fire protection engineer meeting one of the following conditions: a.) An engineer with a Bachelor of Science or Masters of Science Degree in fire protection engineering from an accredited university engineering program, plus a minimum of 5 years' work experience in fire protection engineering. b.) A registered professional engineer who has passed the National Council of Examiners for Engineering and Surveys (NCEE) fire protection engineering written examination. c.) A registered P.E. in a related engineering discipline with a minimum of 5 years' experience dedicated to fire protection engineering.

7. TAB D – FACTOR 2-3 SITE DESIGN CONSIDERATIONS. The site development portion of the proposal must outline the proposed site demolition, layout, grading, storm drainage, and erosion control practices of design and construction. A topographic survey will be provided at Phase 2 to the Offerors. The proposal shall include the following:

7.1 General Site Development Narrative. State the purpose, functional layout of all major structures in relation to parking and access drives, and the extent of grading and drainage system in sufficient detail to delineate and characterize functional features and the desired image or visual appearance of this project. The narrative shall reflect setbacks requirements as indicated in Section 01020, as well as the visual characteristics of the surrounding topography. Include a statement addressing Force Protection Compliance, as well as a statement addressing Storm Water Management such that post development runoff does not exceed pre development runoff flows. Also include a statement of any requirements for traffic control signals and signage plans. Provide a brief statement of the exterior construction materials to be used in the project.

7.2 Erosion Control Narrative. Provide a narrative of the erosion control measures to be used in this project.

7.3 Landscape Narrative. The landscape design narrative shall include an analysis of existing site conditions, including an indication of existing tree and plant material groupings that are to be saved and remain on the project site. The narrative shall indicate specific site problems related to proposed development and the rationale for proposed plant selection and locations. The narrative shall also include a list of suggested types and sizes of plant materials to be used (use native plants as much as possible). Describe how plantings comply with the Installation Design Guide. Provide special emphasis on how the landscape design provides screening of the building from Lightning Road traffic and how the landscaping diverts attention away from any roll-up doors on the front of the building. It shall also discuss type of any irrigation to be provided, and type, quantity and location of any site furniture. The landscape narrative shall also indicate coordination with Anti-terrorism/Force Protection requirements. Describe how any site lighting and/or exterior building lighting complement each other.

7.4 Site Utilities Narrative. Design Narrative shall include Description of the utility systems chosen. Include types of materials to be used.

7.5 Site Development Drawings. Drawings shall be shown at 1 in = 30ft scale (or 1:400 in metric units). All drawings shall have a Legend, North Arrow, and graphic bar scales. Drawings shall be provided in sufficient detail and annotated so that Government may visualize how the designer has interpreted the user's functional and operational requirements in his proposal for final design. Drawings shall include, the following:

7.5.1 Demolition Plan and Tree Removal Plan. The demolition plan shall also show the limits of tree removal.

7.5.2 Layout Plan. This plan should show the building layout in relation to parking areas, access drives, and pedestrian walkways. This plan should show overall dimensions of parking lots, minimum building setbacks (in compliance with Force Protection), minimum setback from Streets or Roads, utility pad locations (this includes dumpster, electrical and mechanical equipment pads). The Layout Plan will also show location of sidewalks, access drives, retaining walls, fencing, site steps, service vehicle drives, pedestrian bridges, sports fields, handicap parking spaces, and curb and gutter. The use of patterning shall be required to distinguish between concrete pavement and bituminous asphalt pavement. The submitted layout plan shall also show dimensions of major items such as buildings and parking lots rather than coordinates of corner points.

7.5.3 Grading and Drainage Plan. This Plan should show contour elevations at 1-foot (250mm) minimum interval and critical spot elevations, as well as finish floor elevations. This plan should also show the locations of storm inlets, curb inlets, manholes, storm drainage pipes, culverts, headwalls, storm water control structures, detention ponds, and drainage ditches.

7.5.4 Landscape Design Plan. This plan shall include existing trees and under story to be saved, new trees to be planted, screens, buffers, lawns, and mulched area for the project. Both large shade trees and small under story and ornamental trees shall be shown. Plant labels shall be provided for the plans.

7.5.5 Site Utility Plan. Indicate locations of outside utilities where required to support the project. Show same scale as other site work drawings. The plan shall include a general utility layout with connection points, valve fittings and requirements for pneumatic ejector, sewage pumps and sump pumps and the relative placement of water and sanitary sewer systems. The layout plans should take into account the ease of maintenance and utility corridors.

8. TAB E – FACTOR 2-4. SUSTAINABLE DESIGN CONSIDERATIONS

8.1 SPIRIT Summary Table. Submit the Appendix "SPIRIT Requirements and Summary Table" with the "Proposal Points" column filled in to reflect the points contained in your proposal, including the total. A "SPIRIT Requirements and Summary Table" shall be provided for each individual occupied building type in project. The requirement is to achieve a minimum of 25 points in each summary table using the SPIRIT Project Rating Tool for Sustainable Design. NOTE: The points indicated on this summary will be considered contract requirements upon award. Do not modify any of the spaces in this column that were filled in on the solicitation.

8.2 Sustainable Design Narrative. Organize the narrative in the same order as SPIRIT summary table with one paragraph devoted to each proposed item on the chart. Briefly describe the activities and/or features proposed to earn each point indicated on your proposal. For mandatory points and requirements the narrative may be limited to repeating the statement found in the "Remarks" column of the SPIRIT summary table.

9. TAB F – FACTOR 2-5 OFFEROR MANAGEMENT PLANS AND SCHEDULES. The offeror shall provide a Management Plan. This is an overall plan showing how the offeror will control the job. The term "management plan" is defined as a plan that includes the following subplans:

9.1 SUBFACTOR 2-5 a. Project Key Personnel.

9.1.1 Provide a narrative and/or diagram that outlines the relationships and interaction between each of the key personnel. Also, provide all of the information required in Phase 1 under the Phase 1 Factor "Individual Recent Relevant Specialized Experience" only if a key individual (or any alternate provided in Phase 1) has changed. Provide the information only for the changed individual.

9.2 SUBFACTOR 2-5 b. Schedule.

9.2.1 Provide an integrated Design and Construction Schedule with all areas clearly identified. The schedule for design and construction shall be task oriented, indicating dates by which milestones are to be achieved. The offeror may use a critical path or other method of his/her choice; however, the schedules shall be graphically represented.

9.2.2 The offeror shall also submit a narrative explaining how the schedules will be achieved.

9.3 SUBFACTOR 2-5 c. Small and Small Disadvantaged Business Utilization.

9.3.1 ALL OFFERORS are required to provide a narrative discussion of their plan for utilization of small and small disadvantaged businesses. At a minimum, the narrative shall discuss:

- Goals for subcontracting with small and small disadvantaged businesses in sufficient detail to allow Government evaluators to determine that these goals are realistic, justifiable, positive, and in accordance with the Government's policy to maximize opportunities for these types of businesses.

- The extent to which small disadvantaged businesses, and where appropriate, historically black colleges and universities/minority institutions (HBCU/MI) have been identified for participation as part of the Offeror's team.

- The Offeror's past and present commitment to providing subcontracting opportunities and encouragement to small and small disadvantaged businesses.

9.3.2 For Offerors information the following are the U.S. Army Corps of Engineers Subcontracting Targets for FY03:

- 57.2% of planned subcontracting dollars placed with Small business concerns

- 8.9% of planned subcontracting dollars placed with Small Disadvantaged business concerns

- 3% of planned subcontracting dollars placed with HubZone small business concerns

- 8.1 of planned subcontracting dollars placed with Women owned small business concerns

- 3% of planned subcontracting dollars placed with Service-Disabled Veteran-owned small business concerns

PROPOSAL DATA SHEET – PHASE 1

NOTE TO OFFERORS
This OFFEROR PERFORMANCE CAPABILITY PROPOSAL DATA SHEET must be completed and attached as the first page of the body of your proposal. The information required by this data sheet may be completed directly on this form or attached to the form as supplemental data sheets.

1. NAME OF OFFEROR.

Name of Offeror(s):

If a joint venture or contractor-subcontractor association of firms, list the individual firms and briefly describe the nature of the association.

Firm 1:

Firm 2:

Nature of Association:

2. DUNS NUMBER FOR OFFEROR
(If more than one DUNS number is to be considered explain affiliation to offeror)

3. ACASS identification number for design firm and CCASS identification number for construction firm.

4. AUTHORIZED NEGOTIATORS. FAR 52.215-11

The offeror represents that the following persons are authorized to negotiate on its behalf with the Government in connection with this Request for Proposals (RFP).

[List names, titles, and telephone number of the authorized negotiator.]

Name of Person Authorized to Negotiate:

Negotiator's Address:

Negotiator's Telephone:

5. PAST PERFORMANCE ON RECENT RELEVANT PROJECTS.

5.1 Provide the Past Performance on Recent Relevant Project information for three completed or substantially completed projects, that are being or have been constructed by the Offeror, and are to be used for third party reference and evaluation purposes. These are the projects for which Past Performance of Recent Relevant Project Evaluation Questionnaires have been provided to a third party.

5.2 If the offeror is made up of separate design and construction companies that have combined for this project, then this item must be completed twice (once for each primary design and construction company), for a total of six projects.

5.3 For each project provide the information shown. Failure to provide this minimum information may result in lower ratings.

6. LIQUIDATED DAMAGES. On an attached sheet, list any projects within the last three years that have been assessed liquidated damages. Provide an explanation.

7. TERMINATED PROJECTS. On an attached sheet, list any projects within the last five years that have been terminated. Provide an explanation.

8. GOVERNMENT PROJECTS. On an attached sheet, list all contracts with the Government within the last three years. Indicate Government contract number and contracting agency (with contact names and telephone numbers).

9. CADD CAPABILITIES. On an attached sheet, describe your office capabilities for using CADD (Computer Aided Design and Drafting) and other forms of automation on this project. This information shall be limited to two 8 ½ by 11 sheets of paper, double spaced, 12 pitch font.

SAMPLE

FACTOR 1-1 PAST PERFORMANCE ON RECENT RELEVANT PROJECTS INFORMATION

A Project Evaluation Questionnaire was sent to a third party for this project? Yes____ No____

Project Title:

Location:

Contract number:

Procuring activity:

Procurement point of contact and telephone number:

List date of construction completion or percent completion if construction is underway:

Address of building(s):

Address and telephone number of owner:

Indicate type of project (private sector, Government, planned unit development, etc.):

General character:

Total cost:

Total cost of all modifications:

Describe how you believe this project is relevant to the project in this RFP:

SAMPLE

FACTOR 1-3 INDIVIDUAL RECENT RELEVANT SPECIALIZED EXPERIENCE.

Project Title:

Location:

Contract number:

Nature of involvement in this project, i.e. General Contractor, subcontractor, designer:

Procuring activity:

Procurement point of contact and telephone number:

List date of construction completion or percent completion if construction is underway:

Address of building(s):

Address and telephone number of owner:

Indicate type of project (private sector, Government, planned unit development, etc.):

General character:

Total cost:

Provide name of key individual:

Provide role/position of key individual for the project above:

Provide length of time in this position for the project above:

What role will this individual perform in the project described in this RFP, and will it be primary or alternate?

Provide separate resume or similar narrative here of key individual's career experience. Also indicate length of time that individual has been a member of the offeror's team:

SAMPLE

FACTOR 1-4 SUSTAINABLE DESIGN EXPERIENCE.

On an attached sheet, provide information for in-progress or completed projects that include sustainable design features, that have been done by the offeror to be used for reference and evaluation purposes. For each project provide the following information:

Project Title:

Location:

Contract number:

Nature of involvement in this project, i.e. General Contractor, subcontractor, designer:

Procuring activity:

Procurement point of contact and telephone number:

List date of construction completion or percent completion if construction is underway:

Address of building(s):

Address and telephone number of owner:

Indicate type of project (private sector, Government, planned unit development, etc.):

General character:

Total cost:

Sustainable design features in project - for each provide the following:

- Brief description of SDD feature.
- Quantified SDD accomplishment or goals
- Nature of involvement in this SDD feature, i.e. General Contractor, subcontractor, designer:

SAMPLE TRANSMITTAL LETTER
AND
PAST PERFORMANCE OF RECENT RELEVANT PROJECT EVALUATION QUESTIONNAIRE

Date: _____

To: _____
_____
_____

We have listed your firm as a reference for work we have performed for you as listed on the attached questionnaire. Our firm has submitted a proposal under a project advertised by the U.S. Army Corps of Engineers, Savannah District: **Marine Corps Reserve Center, Hunter Army Airfield, Savannah, Georgia**. In accordance with Federal Acquisition Regulations (FAR), an evaluation of our firm's past performance will be completed by the Corps of Engineers. Your candid response to the attached questionnaire will assist the evaluation team in this process.

We understand that you have a busy schedule and your participation in this evaluation is greatly appreciated. Please complete the enclosed questionnaire as thoroughly as possible. Space is provided for comments. Understand that while the responses to this questionnaire may be released to the offeror, FAR 15.306 (e)(4) prohibits the release of the names of the persons providing the responses. Complete confidentiality will be maintained.

Please send your completed questionnaire to the following address to arrive NOT LATER THAN **2:00 PM LOCAL TIME ON 7 MARCH 2003**to:

U.S. Army Engineer District, Savannah
Contracting Division (CESAS-CT-C)
ATTN: Donna Knight
100 W. Oglethorpe Ave.
Savannah, GA 31401

The questionnaires can also be emailed to; donna.s.knight@sas02.usace.army.mil or faxed to; 912-652-5828, ATTN: Donna Knight. If you have questions regarding the attached questionnaire, or require assistance, please contact Donna Knight at 912-652-5504. Thank you for your assistance.

PAST PERFORMANCE OF RECENT RELEVANT PROJECT EVALUATION QUESTIONNAIRE

Upon completion of this form, please send directly to the U.S. Army Corps of Engineers in the enclosed addressed envelope or fax to 912-652-5828, ATTN: Donna Knight or e-mail to donna.s.knight@sas02.usace.army.mil **. Do not return this form to our offices. Thank you.**

1. Contractor/Name & Address (City and State):

2. Type of Contract: Fixed Price _____ Cost Reimbursement _____
Other (Specify) _____

3. Title of Project/Contract Number:
_____
_____
_____

4. Description of Work: (Attach additional pages as necessary)

5. Complexity of Work: High _____ Mid _____ Routine _____

6. Location of Work:_____

7. Date of Award: _____

8. Status: Active _____ (provide percent complete)

Complete _____ (provide completion date)

9. Name, address and telephone number of person completing this questionnaire:

10. QUALITY OF CONSTRUCTION (OR DESIGN FOR A DESIGN FIRM):

Evaluate the contractor's performance in complying with contract requirements, quality achieved and overall technical expertise demonstrated.

Outstanding Quality	
Above Average Quality	
Satisfactory Quality	
Marginal Quality	
Unsatisfactory or Experienced Significant Quality Problems	

Remarks: _____

_____

_____

_____

11. TIMELINESS OF PERFORMANCE:

To what extent did the contractor meet the contract schedules and/or individual task order schedules if the contract was an indefinite delivery type contract?

Completed Substantially Ahead of Schedule (Outstanding)	
Completed Ahead of Schedule (Above Average)	
Completed on Schedule or with Minor Delays Under Extenuating Circumstances (Satisfactory)	
Completed Behind Schedule (Marginal)	
Experienced Significant Delays without Justification (Unsatisfactory)	

Remarks: _____

_____

_____

12. CUSTOMER SATISFACTION:

To what extent were the end users satisfied with:

	Quality?	Cost?	Schedule?
Exceptionally Satisfied (Outstanding)			
Highly Satisfied (Above Average)			
Satisfied (Satisfactory)			
Somewhat Dissatisfied (Marginal)			
Highly Dissatisfied (Unsatisfactory)			

Remarks:

_____

_____

_____

13. SUBCONTRACTOR MANAGEMENT (Design or Construction)

How well did the contractor manage and coordinate subcontractors, suppliers, and the labor force?

Outstanding Management/Coordination	
Above Average Management/Coordination	
Satisfactory Management/Coordination	
Marginal Management/Coordination	
Unsatisfactory Management/Coordination	

Remarks:

_____

_____

_____

14. If given the opportunity, would you work with this contractor again?

Yes _____ No _____ Not Sure _____

Remarks:

_____

_____

_____

_____

_____

15. OTHER REMARKS:

Use the space below to provide other information related to the contractor's performance. This may include the contractor's selection and management of subcontractors, flexibility in dealing with contract challenges, their overall concern for the Government's interest (if applicable), project awards received, etc.

_____

_____

_____

_____

_____

_____

_____

_____

Section 00120 – PART 1
PHASE 1 EVALUATION MANUAL

1. GENERAL

The purpose of this document is to establish a uniform evaluation procedure for Phase 1 of the solicitation based on contractually defined criteria. The Evaluation Team will evaluate each proposal individually using the qualitative/quantitative procedures which follow. Each proposal will be reviewed and rated by each of the evaluators. During this process, discrepancies between evaluations will be discussed and resolved within the team. Following the completion of the individual evaluations, a consensus evaluation will be derived. The results of this consensus evaluation will be documented and presented to the Contracting Officer/Source Selection Authority for determination of which proposals proceed into Phase 2 of the solicitation process.

2. PROPOSAL REQUIREMENTS

2.1 Section 00110, Proposal Submission Requirements and Instructions identifies all the necessary submittal information to be included in the proposals. Proposals which reach the evaluation stage have passed an initial Contracting Division review to assure that they are complete and responsive. All proposals which are provided to the evaluation team will be evaluated and rated.

2.2 Past Performance of Recent Relevant Project Evaluation Questionnaires. Each Offeror has been requested to have questionnaires from previous projects completed and forwarded directly to the Savannah District for use by the evaluation team in past performance evaluation and risk analysis. The Government may contact the points of contact indicated on these questionnaires for additional information and to assure validity of the information received. The Government may contact sources other than those provided by the Offeror for information with respect to past performance. These other sources may include ACASS (Architect-Engineer Contract Administration Support System), CCASS (Construction Contractor Appraisal Support System), telephone interviews, and Government personnel with personal knowledge of the Offeror's performance capability. If more than the required number of questionnaires are received, the evaluation team shall evaluate all questionnaires. If less than the required number of questionnaires are received, the proposal shall receive a rating commensurate with the contractor's performance risk as determined by the evaluation team.

3. INDIVIDUAL PROPOSAL RATING WORKSHEETS

3.1 Worksheets are provided on the following pages that the evaluators will use to review and rate the individual proposals.

3.2 Comments are required to support all ratings.

4. RATING METHODOLOGY

4.1 Proposals will be evaluated in each Evaluation Factor based on the following rating scheme:

RATING	EXPLANATION
Outstanding/Very Low Performance Risk	Based on the Offeror's Phase One Submittal, no doubt exists that the Offeror will successfully perform the required effort.
Above Average/Low Performance Risk	Based on the Offeror's Phase One Submittal, little doubt exists that the Offeror will successfully perform the required effort.
Satisfactory/Moderate Performance Risk	Based on the Offeror's Phase One Submittal, some doubt exists that the Offeror will successfully perform the required effort. Normal contractor emphasis should preclude any problems.
Marginal/High Performance Risk	Based on the Offeror's Phase One Submittal, substantial doubt exists that the Offeror will successfully perform the required effort.
Unsatisfactory/Unacceptable Performance Risk	Based on the Offeror's Phase One Submittal, extreme doubt exists that the Offeror will successfully perform the required effort.

4.2 Yes - No Ratings. Where the specific evaluation sheets indicate a YES – NO Rating these items shall be treated as information items. They are included in the evaluation worksheets to assure a similar focus among the evaluators and to ensure that individual evaluators do not overlook proposal information provided.

4.3 Weighting of Factors. Relative Importance Definitions: For the purpose of this evaluation, the following terms will be used to establish the relative importance of the factors and subfactors:

- **Significantly More Important:** The criterion is at least two times greater in value than another criterion.
- **More Important:** The criterion is greater in value than another criterion but less than two times greater.
- **Equal:** The criterion is of the same value or nearly the same as another criterion.

5. EVALUATION FACTORS.

5.1 Factor Relative Weights. The following factors will be evaluated and rated for each proposal:

FACTOR 1-1: OFFEROR PAST PERFORMANCE ON RECENT RELEVANT PROJECTS: This factor is equal in importance to Factor 1-3 and significantly more important than Factor 1-2 .

FACTOR 1-2: TECHNICAL APPROACH NARRATIVE: This factor is more important than Factor 1-4.

FACTOR 1-3: INDIVIDUAL RECENT RELEVANT SPECIALIZED EXPERIENCE: This factor is equal in importance to Factor 1-1 and significantly more important than Factor 1-2.

FACTOR 1-4: OFFEROR SUSTAINABLE DESIGN EXPERIENCE: This factor is the least important factor.

5.2 FACTOR 1-1: OFFEROR PAST PERFORMANCE ON RECENT RELEVANT PROJECTS. The Government will evaluate the Offeror's past performance of recent projects and the relevancy of those projects to the project in this RFP using the sources available to it including, the example projects identified by the Offeror, Past Performance of Recent Relevant Project Evaluation Questionnaires received, ACASS, and CCASS. Offerors may be provided an opportunity to address any negative recent relevant past performance information about which the Offeror has not previously had an opportunity to respond. The Government will evaluate recent relevant past performance based on the elements listed below:

5.2.1 Quality of Construction. Based on information provided in the questionnaire and other information, the Government will assess the quality of the actual construction undertaken and the standards of workmanship exhibited by the Offeror's team.

5.2.2 Timeliness of Performance. The Government will evaluate all information available with respect to the Offeror completing past projects within the scheduled completion times.

5.2.3 Customer Satisfaction. The Government will evaluate all information available with respect to the Offeror's past customer satisfaction, cooperation with customers, and interaction with customers on past projects.

5.2.4 Subcontractor Management. The Government will evaluate all information available with respect to the Offeror's management of subcontractors on past projects.

5.2.5 Recency and Relevancy. The Government will evaluate all information available with respect to the past project being completed recently and the relevancy of the past project to the project described in this RFP.

5.3 FACTOR 1-2: TECHNICAL APPROACH NARRATIVE. The Government will evaluate the overall understanding of the two phase design-build process being used in this solicitation including the following:

- Does the Offeror demonstrate a suitable understanding of the process to enable it to adequately address and anticipate the risks associated with Design/Build processes?
- The roles and responsibilities of the various sub-contractors for both design and construction shall be addressed.
- How does the Offeror continue the design phase of the project and incorporate User comments and reviews into the process?
- The Offeror's Design Quality Control Program shall be briefly described.
- What is the design team's involvement throughout the construction period?
- How does the Offeror integrate construction subcontractors into the design process?
- What are the Offeror's processes for handling construction and design problems.

5.4. FACTOR 1-3: INDIVIDUAL RECENT RELEVANT SPECIALIZED EXPERIENCE. The Government will review the example projects for key individuals provided by the Offeror to evaluate and rate the recent relevant experience of the key individuals in similar projects. The example projects which most closely resemble the project identified in this solicitation will receive the highest consideration in evaluations of key individual experience. If the Offeror cannot provide suitable relevant experience for a key individual and the evaluators consider that the information provided indicates that the key individual has no relevant experience, a determination will be made as to the risk this lack of experience presents to the Government and the proposal will be evaluated accordingly. Key individual experience will be evaluated using the elements listed below.

5.4.1 Similar size construction/design projects completed: The Government will evaluate the number and size of contracts completed, or substantially completed, by the key individual in the past three (3) years with emphasis on projects with similar facility size.

5.4.2 Similar type construction/design projects completed: The Government will evaluate the number and type of construction/design projects with a building/project function/type similar to the project in this RFP undertaken by the key individual in the past three (3) years. Design-Build experience will also be considered here.

5.4.3 Length of time with Offeror Team: The Government will consider the length of time that an individual has been a member of the team submitting the proposal.

5.5 FACTOR 1-4: OFFEROR SUSTAINABLE DESIGN EXPERIENCE. The Government will evaluate the example projects provided by the Offeror to evaluate and rate the recent experience of the Offeror in similar construction and/or design projects that contain sustainable features. The example projects which most closely resemble the project requirements identified in this solicitation will receive the highest consideration. If the Offeror cannot provide suitable sustainable design experience and the evaluators consider that the information provided indicates that the Offeror has no sustainable design experience, a determination will be made as to the risk this lack of sustainable design experience presents to the Government and the proposal will be evaluated accordingly.

6. OVERALL PROPOSAL RATING

6.1 Each member of the Government evaluation team will independently consider all information provided in the Phase 1 proposal. Once these individual analyses are completed, the team will meet and determine a rating for each of the evaluation factors for Phase 1 by consensus decision.

6.2 Following completion of the consensus rating, each proposal will be assigned a single overall adjectival rating. This final overall rating, along with ratings on individual factors, will be provided to the Contracting Officer/Source Selection Authority and used in making the determination of which Offerors will proceed to Phase 2 of the solicitation. In no case will more than five (5) proposals be included in the Phase 2 process.

6.3 No proposals which receive an overall rating of Unsatisfactory will be forwarded to Phase 2 regardless of the total number of proposals received.

6.4 It is the responsibility of the evaluation team to provide and document sufficient strengths, weaknesses, and omissions to support the assigned rating for each factor as well as the overall Phase 1 rating. Comments are required for all ratings.

Offeror: _____

Evaluator:_____

Factor 1-1 Summary and Overall Rating

OFFEROR PAST PERFORMANCE ON RECENT RELEVANT PROJECTS

Item No.	Description	Rating
1.	Were all required Past Performance of Recent Relevant Projects Evaluation Questionnaires Received? If not, how many were received? _____	YES/NO
2.	Do All the Questionnaires Received Reflect Projects Completed or Substantially Completed Within the Last 3 Years? If not, how many of the projects were completed or substantially completed in the last three years? _____	YES/NO
3.	Did the Offeror provide Past Performance on Recent Relevant Projects Information Sheets?	YES/NO
4.	Were all projects on the Past Performance on Recent Relevant Projects Information Sheets completed or substantially completed within the last 3 years? If not, explain with comments below.	YES/NO
5.	Were ACASS or CCASS Ratings available? If Yes, which? _____	YES/NO
6.	Do you have any Personal Experience with the Offeror?	YES/NO
7.	PAST PERFORMANCE ON RECENT RELEVANT PROJECTS	
OVERALL FACTOR 1-1 RATING		

Offeror: _____

Evaluator:_____

Factor 1-1 Summary and Overall Rating
(continued)

- **Strengths.**

- **Weaknesses.**

- **Other.**

Offeror: _____

Evaluator:_____

Factor 1-2 Summary and Overall Rating

OFFEROR TECHNICAL APPROACH NARRATIVE

Item No.	Description	Rating
1.	Technical Approach Narrative Included in Proposal?	YES – NO
2.	Understanding of the Design/Build Process	
OVERALL FACTOR 1-2 RATING		

- **Strengths.**

- **Weaknesses.**

- **Other.**

Offeror: _____

Evaluator:_____

Factor 1-3 Summary and Overall Rating

INDIVIDUAL RECENT RELEVANT SPECIALIZED EXPERIENCE

Item No.	Description	Rating
1.	Does the Proposal include Individual Recent Relevant Specialized Experience Sheets for the required number of projects for each Key Individual? If not, explain below in weaknesses.	YES – NO
2.	Individual Recent Relevant Specialized Experience	
OVERALL FACTOR 1-3 RATING		

- **Strengths.**

- **Weaknesses.**

- **Other.**

Offeror: _____

Evaluator:_____

Factor 1-4 Summary and Overall Rating

OFFEROR SUSTAINABLE DESIGN EXPERIENCE

Item No.	Description	Rating
1.	Does the Proposal include Sustainable Design Experience sheets for the required number of projects? If not, how many projects were sheets provided for? _____	YES – NO
2.	Offeror's Sustainable Design Experience	
OVERALL FACTOR 1-4 RATING		

- **Strengths.**

- **Weaknesses.**

- **Other.**

Offeror: _____

Evaluator:_____

Phase 1 Summary and Overall Rating

Item No.	Description	Rating
1.	Factor 1-1 Offeror Past Performance on Recent Relevant Projects	
2.	Factor 1-2 Technical Approach Narrative	
3.	Factor 1-3 Individual Recent Relevant Specialized Experience	
4.	Factor 1-4 Offeror Sustainable Design Experience	
OVERALL PHASE 1 RATING		

Offeror: _____

PHASE 1 SOURCE SELECTION BOARD SUMMARY RATINGS

FACTOR No.	Description	Board Member 1	Board Member 2	Board Member 3	Board Member 4	Board Member 5	CONSENSUS
1-1	Offeror Past Performance on Recent Relevant Projects						
1-2	Technical Approach Narrative						
1-3	Individual Recent Relevant Specialized Experience						
1-4	Offeror Sustainable Design Experience						
OVERALL PHASE 1 RATING							

_____
Board Member 1

_____
Board Member 2

_____
Board Member 3

_____
Board Member 4

_____
Board Member 5

_____
Board Chairperson

Offeror: _____

PHASE 1 CONSENSUS SUMMARY RATING

FACTOR 1-1 OFFEROR PAST PERFORMANCE ON RECENT RELEVANT PROJECTS

STRENGTHS:

WEAKNESSES:

OTHER COMMENTS:

Offeror: _____

PHASE 1 CONSENSUS SUMMARY RATING
(Continued)

FACTOR 1-2 OFFEROR TECHNICAL APPROACH NARRATIVE

STRENGTHS:

WEAKNESSES:

OTHER COMMENTS:

Offeror: _____

PHASE 1 CONSENSUS SUMMARY RATING
(Continued)

FACTOR 1-3 INDIVIDUAL RECENT RELEVANT SPECIALIZED EXPERIENCE

STRENGTHS:

WEAKNESSES:

OTHER COMMENTS:

Offeror: _____

PHASE 1 CONSENSUS SUMMARY RATING
(Continued)

FACTOR 1-4 OFFEROR SUSTAINABLE DESIGN EXPERIENCE

STRENGTHS:

WEAKNESSES:

OTHER COMMENTS:

Section 00120 – PART 2
PHASE 2 EVALUATION MANUAL

1. GENERAL. The purpose of this document is to establish a uniform evaluation procedure for Phase 2 of the solicitation based on contractually defined criteria. This process will be an extension of the Phase 1 evaluation process. The Evaluation Team will evaluate each proposal individually using the qualitative/quantitative procedures that follow. Each proposal will be reviewed and rated by each of the evaluators. During this process, discrepancies between evaluations will be discussed and resolved within the team. Following the completion of the individual evaluations, a consensus evaluation will be derived. The results of this consensus evaluation will be used to set the competitive range for the purposes of discussions and as the basis for the best value decision by the Contracting Officer/ Source Selection Authority.

2. PROPOSAL REQUIREMENTS. Section 0110, Proposal Submission Requirements and Instructions identifies all the necessary submittal information to be included in the proposals. Proposals that reach the evaluation stage have passed an initial Contracting Division review to assure that they are complete and responsive. All proposals that are provided to the evaluation team will be evaluated and rated.

3. INDIVIDUAL PROPOSAL RATING WORKSHEETS

3.1 Worksheets are provided on the following pages that the evaluators will use to review and rate the individual proposals.

3.2 Comments are required to support all ratings.

4. RATING METHODOLOGY

4.1 General. The proposals from the Offerors who reach Phase 2 will be evaluated by a team to determine compliance with this solicitation (as a minimum), and to evaluate the quality of the proposed materials, methods, and procedures. Each of the evaluation Factors for Phase 2 will be evaluated by the Government and a final overall rating for the proposals will be determined by consensus of the Government evaluation team. Evaluation criteria (factors and subfactors) will be rated using the following adjectival descriptions. Evaluators will apply the appropriate adjective to each criterion rated. The evaluator's narrative explanation must clearly establish that the Offeror's submittal meets the definitions established below:

> **OUTSTANDING:** Information submitted in the proposal demonstrates the Offeror's potential to significantly exceed performance or capability standards identified in the solicitation. The Offeror has clearly demonstrated an understanding of all aspects of the requirements to the extent that timely and highest quality performance is anticipated and risk to the Government is very low. The Offeror has convincingly demonstrated that the RFP requirements have been analyzed, evaluated, and synthesized into approaches, plans, and techniques that, when implemented, should result in outstanding, effective, efficient, and economical performance under the contract. An assigned rating within the bounds of "outstanding" indicates that, in terms of the specific factor (or subfactor), the submittal contains essentially no significant weaknesses, deficiencies or disadvantages. The proposal has exceptional strengths that will significantly benefit the Government. The proposal exceeds an "Above Average" rating. **The proposal significantly exceeds most or all solicitation requirements. The proposal presents very low risk to the Government.**

ABOVE AVERAGE - Information submitted in the proposal demonstrates the Offeror's potential to exceed performance or capability standards. The proposal has one or more strengths that will benefit the Government. The areas in which the Offeror exceeds the requirements are anticipated to result in a high level of efficiency or productivity or quality. An assigned rating within the bounds of "Above Average" indicates that, in terms of the specific factor (or subfactor), any deficiencies noted are of a minor nature that should not seriously affect the Offeror's performance. The submittal demonstrates that the requirements of the RFP are well understood and the approach will likely result in a high quality of performance which represents low risk to the Government. A rating within the bounds of "Above Average" is used when there are indications of exceptional features or innovations that could prove to be beneficial, or contrarily, there are no weaknesses that could diminish the quality of the effort or increase the risk of failure. Disadvantages are minimal. The submittal contains excellent features that will likely produce results very beneficial to the Government. Response exceeds a "Satisfactory" rating. **The proposal fully meets all RFP requirements and significantly exceeds many of the RFP requirements. The proposal presents low risk to the Government.**

SATISFACTORY - Information submitted in the proposal demonstrates the Offeror's potential to meet performance or capability standards. The proposal presents an acceptable solution to the Government's requirements. The proposal meets minimum RFP requirements. Few or no advantages or strengths are presented. The Offeror's proposal may contain weaknesses in several areas that are offset by strengths in other areas. Complete and comprehensive proposal; exemplifies an understanding of the scope and depth of the task requirements and the Offeror's understanding of the Government's requirements. A rating of "Satisfactory" indicates that, in terms of the specific factor (or subfactor), there is sufficient confidence that a fully compliant level of performance will be achieved with moderate risk to the Government. Response exceeds a "Marginal" rating. **No significant advantages or disadvantages. The proposal presents moderate risk to the Government.**

MARGINAL - Information submitted in the proposal demonstrates the Offeror's potential to marginally meet performance or capability standards necessary for minimal, but still acceptable contract performance. The proposal is not adequately responsive or does not address the specific factor(s) (or subfactor(s)). The Offeror's interpretation of the Government's requirements is so superficial, incomplete, vague, incompatible, incomprehensible, or incorrect as to be unacceptable. The assignment of a rating within the bounds of "Marginal" indicates that the evaluator feels that mandatory corrective action would be required to prevent significant deficiencies from affecting the overall project. The Offeror's qualifications and proposal demonstrate a minimally acceptable understanding of the requirements of the RFP and the approach could result in a barely adequate quality of performance, which represents a high level of risk to the Government. Low probability of success, although the proposal has a reasonable chance of becoming at least acceptable. Response exceeds an "Unsatisfactory" rating. **Significant disadvantages. Substantial doubt exists that the Offeror will successfully perform the required effort. The proposal presents high risk to the Government.**

UNSATISFACTORY - The proposal fails to demonstrate that it meets performance or capability standards required in the RFP. The proposal is unacceptable. Requirements can only be met with major changes to the proposal. The proposal does not meet the minimum requirements of the RFP. There is no reasonable expectation that acceptable performance would be achieved. The Offeror's proposal has many deficiencies and/or gross omissions; fails to provide a reasonable, logical approach to fulfilling much of the Government's requirements; or, fails to meet many of the minimum requirements. The Offeror's proposal is so unacceptable that it would have to be completely revised in order to make it acceptable. **Very significant disadvantages. Significant doubt that the Offeror will perform the required effort. The proposal presents unacceptably high risk to the Government.**

4.2 YES – NO Ratings. Where the specific evaluation sheets indicate a YES – NO Rating these items shall be treated as information items. They are included in the evaluation worksheets to assure a similar focus among the evaluators and to ensure that individual evaluators do not overlook proposal information provided.

4.3 Weighting of Factors. Relative Importance Definitions: For the purpose of this evaluation, the following terms will be used to establish the relative importance of the factors and subfactors:

- **Significantly More Important*:*** The criterion is at least two times greater in value than another criterion.
- **More Important:** The criterion is greater in value than another criterion but less than two times greater.
- **Equal:** The criterion is of the same value or nearly the same as another criterion.

5. EVALUATION FACTORS

5.1 Factor Relative Weights. The following factors will be evaluated and rated for each proposal:

5.1.1 PRICE is equal in importance to TECHNICAL FACTORS.

5.1.2 Weight among technical factors:

- **The Phase 1 Overall Rating is equal in importance to Factor 2-1.**
- **FACTOR 2-1: BUILDING FUNCTION AND AESTHETICS:** This factor is more important than Factors 2-2 and 2-3, and significantly more important than factors 2-4 and 2-5.
- **FACTOR 2-2: BUILDING SYSTEMS:** This factor is equal in importance to Factor 2-3 and more important than Factors 2-4 and 2-5.
- **FACTOR 2-3: SITE DESIGN CONSIDERATIONS:** This factor is equal in importance to Factor 2-2 and more important than Factors 2-4 and 2-5.
- **FACTOR 2-4: SUSTAINABLE DESIGN CONSIDERATIONS:** This factor is equal in importance to Factor 2-5.
- **FACTOR 2-5: OFFEROR MANAGEMENT PLANS AND SCHEDULES:** This factor is equal in importance to Factor 2-4 .

6. OVERALL PROPOSAL RATING

6.1 The intent of the evaluation worksheets that follow is to focus the evaluators on the key issues and concerns with respect to construction, operation, and function of the facilities. These worksheets are meant to stimulate thought and analysis and provide a framework in which to document concerns, strengths, weaknesses, and omissions. Evaluators are encouraged to document all observations and analyses when analyzing the individual proposals, and to share that analysis with the team during the consensus discussions.

6.2 It is the responsibility of the evaluation team to provide and document strengths, weaknesses, and omissions to support the assigned rating in each Factor as well as the overall Phase 2 rating. Comments are required for all ratings.

6.3 The Chairperson shall provide a copy of the Phase 1 ratings for each Offeror. The evaluation team, will then weigh the assigned ratings from Phase 1 and Phase 2, take into account the assembled strengths and weaknesses, and provide an overall proposal rating for each Offeror. During the consensus evaluation, a single “consensus rating”

worksheet shall be completed for each proposal and signed by all the evaluators. It is imperative that all comments and supporting rational for the rating assigned be included on this consensus sheet. This final combined rating shall be used for comparison and in the trade off process as applicable.

6.4 Following the completion of the consensus discussions and rating assignments, the individual rating worksheets from each of the evaluators will be collected by the Chairperson. Each evaluator shall sign the final consensus rating sheet.

7. BASIS OF AWARD

7.1 In order to determine which proposal represents the best overall value, the Government will compare proposals to one another. The Government will award a firm fixed-price contract to that responsible Offeror whose submittal and price proposal contain the combination of those criteria described in this document offering the best overall value to the Government. Best value will be determined by a comparative assessment of proposals against all source selection criteria in this RFP.

7.2 The Government is concerned with striking the most advantageous balance between technical features and cost to the Government..

7.3 As technical ratings and relative advantages and disadvantages become less distinct, differences in price between proposals are of increased importance in determining the most advantageous proposal. Conversely, as differences in price become less distinct, differences in scoring and relative advantages and disadvantages between proposals are of increased importance to the determination.

7.4 The Government reserves the right to accept other than the lowest priced offer. The right is also reserved to reject any and all offers. The basis of award will be a conforming offer, the price or cost of which may or may not be the lowest. If other than the lowest offer, it must be sufficiently more advantageous than the lowest offer to justify the payment of additional amounts.

7.5 Offerors are reminded to include their best technical and price terms in their initial offer and not to automatically assume that they will have an opportunity to participate in discussions or be asked to submit a revised offer. The Government may make award of a conforming proposal without discussions, if in the best interests of the Government.

EVALUATION CRITERIA

FACTOR 2-1: BUILDING FUNCTION AND ASTHETICS

This factor considers the overall functional layout and interaction of the spaces in the facilities as well as the "appeal" of the facility considering interior as well as exterior considerations. The subfactors to be considered deal with the planning and design of the spaces with respect to soldier working conditions. Closely associated with the functional layout of the spaces and facilities, this factor considers the aesthetics of the interior areas as well as the exterior finishes and design of the facilities, up to and including pedestrian ways and the overall environment created by the design proposed. The subfactors described below will be evaluated in the following order of importance:

Subfactors a and b are equal in importance.

Subfactors c and d are "GO/NO GO" factors and will be rated as pass/fail without an adjectival component.

SUBFACTOR 2-1 a. FUNCTIONAL ARRANGEMENT The following items will be considered in the evaluation of the functional arrangement of the various facilities:

(1) Does the building floor plan provide space arrangement well suited to the mission of the facility?

(2) Does the building floor plan provide acceptable life safety and fire safety measures?

(3) Evaluate the Offeror's floor plan with respect to the functional and spatial relationship requirements/adjacencies established in the Statement of Work.

(4) Does the Offeror's floor plan demonstrate a suitable furnishings/work station layout while allowing adequate space for circulation and other requirements?

SUBFACTOR 2-1 b. Building Aesthetics. The following items will be considered (Materials will be evaluated in Factor 2-2):

(1) Exterior Considerations:

(a) Facades, roof lines, and delineation of entrances.
(b) Proportions of fenestration in relation to elevations.
(c) Shadow effects, materials, and textures.
(d) Proportion and scale within the structure.
(e) Compliance with Installation Design Guide Recommendations
(f) Exterior color schemes proposed.
(g) Other aesthetic considerations.

(2) Interior Considerations:

(a) Are the proposed colors and details conducive to the mission of the facility?
(b) Do the proposed materials and finishes represent a positive working environment?
(c) Do the ceiling heights, hallway widths, and other space sizes and configurations provided develop a workable solution to the facility mission?

(d) Is the interior system and finishes proposed suitable for use in a facility where the primary occupants are soldiers? Are these systems suitable for a heavy usage environment?

SUBFACTOR 2-1 c. APPROPRIATE FACILITIES

From an overall perspective, does the proposal include all the required facilities as described in the Statement of Work?

SUBFACTOR 2-1 d. MINIMUM/MAXIMUM SPACE AND FACILITY SIZE

Does the proposal include all the mandatory spaces in response to the requirements set forth in the Statement of Work? For each of the spaces with a minimum or maximum size limitation, does the proposal comply with these requirements? Insufficient information contained in the proposal to evaluate this item will be considered a “NO GO” and will represent a “FAIL” rating. Do the facility square footages fall within (do not exceed) the RFP guidance?

EVALUATION CRITERIA
FACTOR 2-2: BUILDING SYSTEMS

This factor considers the materials, layout, maintainability, quality, durability, maintenance considerations, ease of removal and replacement considerations, and any aspects of the proposed building systems and materials. Additional consideration will be given to all proposed systems or materials which exceed the minimum requirements of the RFP. Offerors are encouraged to present energy, maintenance, and life cycle cost improvements which will lead to the overall improvement in the final facilities constructed. The following subfactors shall be considered in evaluating this factor. The levels of importance are as follows:

Subfactor a is more important than Subfactors b and c.

Subfactor b and c are equal in weight.

SUBFACTOR 2-2 a. Building Heating, Ventilating, Air Conditioning, Plumbing Systems and Fire Protection Systems. Evaluate the heating, air conditioning, and ventilating systems proposed. Evaluation will concentrate on the proposed schematic drawing information presented and the design approach narratives included in the proposals. The systems proposed must meet the minimum requirements set out in the Statement of Work and shall represent systems which are fully integrated into the building structure and are fully capable of environmental control of the spaces. Within this subfactor, the automatic temperature controls will also be considered. Where addressed in the Statement of Work, the proposed automatic temperature controls systems proposed shall be 100% compatible and integrated into the existing Installation-Wide Controls System without translators or third party interface devices. Additional considerations will be given to proposals that incorporate energy recovery systems, high efficiency systems, energy conservation considerations, thermal storage systems, and other systems and features designed to enhance the overall performance of the facility while reducing the operating and maintenance costs expected. Evaluate the proposed fire detection and suppression systems. Ensure that the design will be accomplished by a fire protection professional.

SUBFACTOR 2-2 b. Building Structural Systems. Evaluate the structural systems and sub-systems proposed for installation in the facilities. While no detail drawings or calculations are required or desired, this subfactor will evaluate the narrative descriptions of the structural systems proposed. Consideration will be given to overall life cycle maintenance of the systems and also to considerations of materials selected with respect to the expected use by soldiers. Additional considerations will be given to proposed systems with a long expected life (greater than 25 years) vs. a system requiring greater cyclical replacement.

SUBFACTOR 2-2 c. Electrical Power, Lighting, Grounding, and Communications Systems. Evaluate the electrical power and lighting systems proposed for installation. Evaluation will concentrate on the proposed schematic drawing information presented and the design approach narratives included in the proposals. The systems proposed must meet the minimum requirements set forth in the Statement of Work and shall represent systems that are fully integrated into the building structure. Additional consideration will be given to proposals which incorporate energy saving materials or materials which represent a lower life cycle cost to the Base.

EVALUATION CRITERIA
FACTOR 2-3: SITE DESIGN CONSIDERATIONS

This factor considers the layout and planning of the site and various specialties that comprise a good site development plan. All elements of site design will be considered in this factor. The following subfactors shall be considered in evaluating this factor. The levels of importance are as follows:

Subfactors a and b are equal in importance and are more important than Subfactor c.

SUBFACTOR 2-3 a. Area Development Plan. This subfactor evaluates the overall development concept proposed in the Offeror's plan with respect to the placement and orientation of the facilities, parking areas, pedestrian ways, circulation paths, site lighting, and other aspects which comprise the overall site development. Proposals that reflect the design intent and direction as outlined in the Statement of Work will receive the most consideration during the evaluation process.

SUBFACTOR 2-3 b. Force Protection Considerations. This subfactor evaluates the inclusion in the Offeror's proposal, of the site restraints imposed by the Force Protection requirements in the Statement of Work. The proposal must address this subfactor specifically. If a proposal is rated "unsatisfactory" in this subfactor the proposal may be eliminated from further consideration.

SUBFACTOR 2-3 c. Site Utilities. This factor evaluates the technical performance of the proposed site utility and exterior utility distribution systems. The quality of the proposed design as well as the materials selected will be considered in this item. Emphasis will be placed on durability, corrosion resistance, ease of maintenance, and life cycle cost of materials selected. Consideration will be given to the suitability of the chosen materials for the site soil conditions present.

EVALUATION CRITERIA
FACTOR 2-4: SUSTAINABLE DESIGN CONSIDERATIONS

Offerors shall include a preliminary ranking of the sustainable design considerations included in the proposal. The successful proposal shall be required to complete a detailed analysis on the final design that meets or exceeds the preliminary ranking established at proposal level. The evaluation of this factor shall be as follows:

FACTOR RATING	SPIRIT POINTS PROPOSED
Unsatisfactory	Less than 25 points
Marginal	25 to 29 points
Satisfactory	30 to 39 points
Above Average	40 to 49 points
Outstanding	50 points or more

EVALUATION CRITERIA
FACTOR 2-5: OFFEROR MANAGEMENT PLANS AND SCHEDULES

This factor evaluates the Offeror's Project Management Plans as well as the proposed schedule for completion of the entire design-build project. Through this factor the Government will evaluate the Offeror's understanding of the solicitation provisions with respect to an integrated design-build process and the associated quality control, scheduling, coordination, and contract close out provisions. Subfactor a is more important than subfactor b. Subfactor b is more important than Subfactor c.

SUBFACTOR 2-5 a. Offeror Project Key personnel. Offerors will receive the same evaluation rating for this sub-factor as was given to Phase 1 Factor "Individual Recent Relevant Specialized Experience" unless the offeror changes the key personnel, or the Government determines that the narrative or diagram showing the relationship and interaction between key personnel warrants a change in the rating. The Government will evaluate any key personnel changes and the narrative/diagram to determine a final rating for this subfactor.

SUBFACTOR 2-5 b. Schedule Information. The schedule will be evaluated to assess the rationale of how the Offeror intends to comply with the submitted schedule and with the maximum construction duration identified in the RFP. The schedule must reflect a single task oriented structure for both design and construction. The schedule will be reviewed for completeness, detail, and the inclusion of required milestones.

SUBFACTOR 2-5 c. Small and Small Disadvantaged Business Utilization.
The Government will evaluate narratives provided for the following elements. Greater detail and specificity will be given greater credit than general statements and commitments:

? The extent to which the goals for subcontracting with small and small disadvantaged businesses are realistic, justifiable, positive, and in accordance with the Government's policy to maximize opportunities for these types of businesses.

? The extent to which small disadvantaged businesses, and where appropriate, historically black colleges and universities/minority institutions (HBCU/MI) have been identified for participation as part of the Offeror's team.

? The Offeror's past commitment to providing subcontracting opportunities and encouragement to small and small disadvantaged businesses.

Offeror: _____

Evaluator:_____

PROPOSAL RATING WORKSHEET

FACTOR 2-1

BUILDING FUNCTION AND AESTHETICS

General: In some areas the evaluators will be required to use subjective judgment based on experience and expertise to arrive at a rating adjective. In this most basic area the subfactors are concerned with the "appeal" of the facility as well as its functionality in space arrangement and work space circulation patterns. This subfactor will also consider the aesthetics of the interior and exterior of the proposed facilities. The last two subfactors are GO/NO GO items. If either of these items is a "NO GO" rating, the entire factor (2-1) shall be rated as "UNACCEPTABLE".

SUBFACTOR 2-1 a. Functional Arrangement.

/__ / Outstanding

/__ / Above Average

/__ / Satisfactory

/__ / Marginal

/__ / Unsatisfactory

- Strengths.

- Weaknesses.

- Other Comments.

Offeror: _____

Evaluator:_____

PROPOSAL RATING WORKSHEET

BUILDING FUNCTION AND AESTHETICS
FACTOR 2-1
(Continued)

SUBFACTOR 2-1 b. Building Aesthetics.

/__ / Outstanding

/__ / Above Average

/__ / Satisfactory

/__ / Marginal

/__ / Unsatisfactory

- Strengths.

- Weaknesses.

- Other Comments.

Offeror: _____

Evaluator:_____

PROPOSAL RATING WORKSHEET

BUILDING FUNCTION AND AESTHETICS
FACTOR 2-1
(Continued)

SUBFACTOR 2-1 c. Appropriate Facilities. Has the offeror provided the facilities as required by the Statement of Work? This subfactor is to be evaluated on the "gross scale" of buildings and types of building provided. The actual evaluation of the technical quality of those facilities will be done in other factors and subfactors.

/__ / GO /__ / NO GO

Other Comments.

SUBFACTOR 2-1 d. Minimum Space and Facility Size. Does the proposal include all the spaces required by the statement of work and do those spaces comply with the minimum size or dimension requirements of the statement of work? Insufficient or incomplete information in the proposal will be scored as a "NO GO".

/__ / GO /__ / NO GO

Other Comments.

Offeror: _____

Evaluator:_____

PROPOSAL RATING WORKSHEET

FACTOR 2-2 BUILDING SYSTEMS

SUBFACTOR 2-2 a BUILDING HVAC, PLUMBING, AND FIRE PROTECTION

/__ / Outstanding

/__ / Above Average

/__ / Satisfactory

/__ / Marginal

/__ / Unsatisfactory

- Strengths.

- Weaknesses.

- Other Comments.

Offeror: _____

Evaluator:_____

PROPOSAL RATING WORKSHEET

FACTOR 2-2 BUILDING SYSTEMS

SUBFACTOR 2-2 b BUILDING STRUCTURAL SYSTEMS

/__ / Outstanding

/__ / Above Average

/__ / Satisfactory

/__ / Marginal

/__ / Unsatisfactory

- Strengths.

- Weaknesses.

- Other Comments.

Offeror: _____

Evaluator:_____

PROPOSAL RATING WORKSHEET

FACTOR 2-2 BUILDING SYSTEMS

SUBFACTOR 2-2 c BUILDING ELECTRICAL POWER, LIGHTING, GROUNDING, AND COMMUNICATIONS SYSTEMS

/__ / Outstanding

/__ / Above Average

/__ / Satisfactory

/__ / Marginal

/__ / Unsatisfactory

- Strengths.

- Weaknesses.

- Other Comments.

Offeror: _____

Evaluator:_____

PROPOSAL RATING WORKSHEET

FACTOR 2-3 SITE DESIGN CONSIDERATIONS

SUBFACTOR 2-3 a AREA DEVELOPMENT PLAN

/__ / Outstanding

/__ / Above Average

/__ / Satisfactory

/__ / Marginal

/__ / Unsatisfactory

- Strengths.

- Weaknesses.

- Other Comments.

Offeror: _____

Evaluator:_____

PROPOSAL RATING WORKSHEET

FACTOR 2-3 SITE DESIGN CONSIDERATIONS

SUBFACTOR 2-3 b FORCE PROTECTION CONSIDERATIONS

/__ / Outstanding

/__ / Above Average

/__ / Satisfactory

/__ / Marginal

/__ / Unsatisfactory

- Strengths.

- Weaknesses.

- Other Comments.

Offeror: _____

Evaluator:_____

PROPOSAL RATING WORKSHEET

FACTOR 2-3 SITE DESIGN CONSIDERATIONS

SUBFACTOR 2-3 c SITE UTILITIES

/__ / Outstanding

/__ / Above Average

/__ / Satisfactory

/__ / Marginal

/__ / Unsatisfactory

- Strengths.

- Weaknesses.

- Other Comments.

Offeror: _____

Evaluator:_____

PROPOSAL RATING WORKSHEET

FACTOR 2-4

SUSTAINABLE DESIGN CONSIDERATIONS

SUSTAINABILITY RATINGS		
Offeror Prepared Sustainability Level	***Associated Factor Rating***	***Comments***
SPIRIT POINTS		
50 or more	Outstanding	
40 to 49	Above Average	
30 to 39	Satisfactory	
25 to 29	Marginal	
Less than 25	Unsatisfactory	

Factor Rating: _____

- Strengths.

- Weaknesses.

- Other Comments.

Offeror: _____

Evaluator:_____

PROPOSAL RATING WORKSHEET

FACTOR 2-5

OFFEROR MANAGEMENT PLANS AND SCHEDULES

2-5 a. Key Personnel:

/__/ Outstanding

/__/ Above Average

/__ / Satisfactory

/__ / Marginal

/__ / Unsatisfactory

- Strengths.

- Weaknesses.

- Other Comments.

Offeror: _____

Evaluator:_____

PROPOSAL RATING WORKSHEET
FACTOR 2-5 OFFEROR MANAGEMENT PLANS AND SCHEDULES
(Continued)

SUBFACTOR 2-5 b. Schedule Information.

/__ / Outstanding

/__ / Above Average

/__ / Satisfactory

/__ / Marginal

/__ / Unsatisfactory

- Strengths.

- Weaknesses.

- Other Comments.

Offeror: _____

Evaluator:_____

PROPOSAL RATING WORKSHEET
FACTOR 2-5 OFFEROR MANAGEMENT PLANS AND SCHEDULES
(Continued)

SUBFACTOR 2-5 c Small and Small Disadvantaged Business Utilization.

/__ / Outstanding

/__ / Above Average

/__ / Satisfactory

/__ / Marginal

/__ / Unsatisfactory

- Strengths.

- Weaknesses.

- Other Comments.

Offeror:_____
Evaluator:_____

INDIVIDUAL RATING SUMMARY		
Item No.	**Description**	**Rating**
1.	**Factor 2-1 Building Function and Aesthetics**	
	Subfactor 2-2 a Functional Arrangement	
	Subfactor 2-2 b Building Aesthetics	
	Subfactor 2-2 c Appropriate Facilities	
	Subfactor 2-2 d Minimum Space and Facility Size	
2.	**Factor 2-2 Building Systems**	
	Subfactor 2-2 a HVAC, Plumbing, Fire Protection	
	Subfactor 2-2 b Structural	
	Subfactor 2-2 c Electrical Power, Lighting, Grounding, Communications	
3.	**Factor 2-3 Site Design Considerations**	
	Subfactor 2-3 a Area Development Plan	
	Subfactor 2-3 b Force Protection Considerations	
	Subfactor 2-3 c Site Utilities	
4.	**Factor 2-4 Sustainable Design Considerations**	
5.	**Factor 2-5 Offeror Management Plans and Schedules**	
	Subfactor 2-5 a Key Personnel	
	Subfactor 2-5 b Schedule Information	
	Subfactor 2-5 c Small and SDBusiness Utilization	
OVERALL PHASE 2 RATING		

CONSENSUS SUMMARY RATINGS

FACTOR DESCRIPTION	Board Member 1	Board Member 2	Board Member 3	Board Member 4	Board Member 5	CONSENSUS
Factor 2-1 Building Function and Aesthetics						
Subfactor 2-1 a Functional Arrangement						
Subfactor 2-1 b Building Aesthetics						
Subfactor 2-1 c Appropriate Facilities						
Subfactor 2-1 d Minimum Space & Facility Size						
Factor 2-2 Building Systems						
Subfactor 2-2 a HVAC, Plumbing, Fire Protection						
Subfactor 2-2 b Structural						
Subfactor 2-2 c Electrical Power, Lighting, Grounding, Communications						
Factor 2-3 Site Design Considerations						
Subfactor 2-3 a Area Development Plan						
Subfactor 2-3 b Force Protection						
Subfactor 2-3 c Site Utilities						
Factor 2-4 Sustainable Design Considerations						
Factor 2-5 Offeror Management Plans and Schedules						
Subfactor 2-5 a Key Personnel						
Subfactor 2-5 b Schedule Information						
Subfactor 2-5 c Small and SDB Utilization						
OVERALL PHASE 2 RATING						

Section 00600 - Representations & Certifications

CLAUSES INCORPORATED BY FULL TEXT

52.222-38 COMPLIANCE WITH VETERANS' EMPLOYMENT REPORTING REQUIREMENTS (DEC 2001)

By submission of its offer, the offeror represents that, if it is subject to the reporting requirements of 38 U.S.C. 4212(d) (i.e., if it has any contract containing Federal Acquisition Regulation clause 52.222-37, Employment Reports on Special Disabled Veterans, Veterans of the Vietnam Era, and Other Eligible Veterans), it has submitted the most recent VETS-100 Report required by that clause.

(End of provision)

52.203-2 CERTIFICATE OF INDEPENDENT PRICE DETERMINATION (APR 1985)

(a) The offeror certifies that --

(vi) The prices in this offer have been arrived at independently, without, for the purpose of restricting competition, any consultation, communication, or agreement with any other offeror or competitor relating to –

(i) Those prices,

(ii) The intention to submit an offer, or

(iii) The methods of factors used to calculate the prices offered:

(2) The prices in this offer have not been and will not be knowingly disclosed by the offeror, directly or indirectly, to any other offeror or competitor before bid opening (in the case of a sealed bid solicitation) or contract award (in the case of a negotiated solicitation) unless otherwise required by law; and

(3) No attempt has been made or will be made by the offeror to induce any other concern to submit or not to submit an offer for the purpose of restricting competition.

(b) Each signature on the offer is considered to be a certification by the signatory that the signatory --

(1) Is the person in the offeror's organization responsible for determining the prices offered in this bid or proposal, and that the signatory has not participated and will not participate in any action contrary to subparagraphs (a)(1) through (a)(3) of this provision; or

(2) (i) Has been authorized, in writing, to act as agent for the following principals in certifying that those principals have not participated, and will not participate in any action contrary to subparagraphs (a)(1) through (a)(3) of this provison _____ (insert full name of person(s) in the offeror's organization responsible for determining the prices offered in this bid or proposal, and the title of his or her position in the offeror's organization);

(ii) As an authorized agent, does certify that the principals named in subdivision (b)(2)(i) above have not participated, and will not participate, in any action contrary to subparagraphs (a)(1) through (a)(3) above; and

(iii) As an agent, has not personally participated, and will not participate, in any action contrary to subparagraphs (a)(1) through (a)(3) of this provision.

(c) If the offeror deletes or modifies subparagraph (a)(2) of this provision, the offeror must furnish with its offer a

signed statement setting forth in detail the circumstances of the disclosure.

(End of provision)

52.203-11 CERTIFICATION AND DISCLOSURE REGARDING PAYMENTS TO INFLUENCE CERTAIN FEDERAL TRANSACTIONS (APR 1991)

(a) The definitions and prohibitions contained in the clause, at FAR 52.203-12, Limitation on Payments to Influence Certain Federal Transactions, included in this solicitation, are hereby incorporated by reference in paragraph (b) of this Certification.

(b) The offeror, by signing its offer, hereby certifies to the best of his or her knowledge and belief that on or after December 23, 1989,--

(1) No Federal appropriated funds have been paid or will be paid to any person for influencing or attempting to influence an officer or employee of any agency, a Member of Congress, an officer or employee of Congress, or an employee of a Member of Congress on his or her behalf in connection with the awarding of any Federal contract, the making of any Federal grant, the making of any Federal loan, the entering into of any cooperative agreement, and the extension, continuation, renewal, amendment or modification of any Federal contract, grant, loan, or cooperative agreement;

(2) If any funds other than Federal appropriated funds (including profit or fee received under a covered Federal transaction) have been paid, or will be paid to any person for influencing or attempting to influence an officer or employee of any agency, a Member of Congress, an officer or employee of Congress or an employee of a Member of Congress on his or her behalf in connection with this solicitation, the offeror shall complete and submit, with its offer, OMB standard form LLL, Disclosure of Lobbying Activities, to the Contracting Officer; and

(3) He or she will include the language of this certification in all subcontract awards at any tier and require that all recipients of subcontract awards in excess of $100,000 shall certify and disclose accordingly.

(vii) Submission of this certification and disclosure is a prerequisite for making or entering into this contract imposed by section 1352, title 31, United States Code. Any person who makes an expenditure prohibited under this provision, shall be subject to a civil penalty of not less than $10,000, and not more than $100,000, for each such failure.

(End of provision)

52.204-5 WOMEN-OWNED BUSINESS (OTHER THAN SMALL BUSINESS) (MAY 1999)

(a) Definition. Women-owned business concern, as used in this provision, means a concern that is at least 51 percent owned by one or more women; or in the case of any publicly owned business, at least 51 percent of its stock is owned by one or more women; and whose management and daily business operations are controlled by one or more women.

(b) Representation. [Complete only if the offeror is a women-owned business concern and has not represented itself as a small business concern in paragraph (b)(1) of FAR 52.219-1, Small Business Program Representations, of this solicitation.] The offeror represents that it ( ) is a women-owned business concern.

(End of provision)

52.204-4003 TAXPAYER IDENTIFICATION

Taxpayer Identification Number (TIN)," as used in this provision, means the number required by the Internal Revenue Service (IRS) to be used by the offeror in reporting income tax and other returns. The TIN may be either a Social Security Number or an Employer Identification Number.

(a) Taxpayer Identification Number (TIN).

___ TIN:._____

___ TIN has been applied for.

___ TIN is not required because:

___ Offeror is a nonresident alien, foreign corporation, or foreign partnership that does not have income effectively connected with the conduct of a trade or business in the United States and does not have an office or place of business or a fiscal paying agent in the United States;

___ Offeror is an agency or instrumentality of a foreign government;

___ Offeror is an agency or instrumentality of the Federal Government.

(b) Type of organization.

___ Sole proprietorship;

___ Partnership;

___ Corporate entity (not tax-exempt);

___ Corporate entity (tax-exempt);

___ Government entity (Federal, State, or local);

___ Foreign government;

___ International organization per 26 CFR 1.6049-4;

___ Other _____

(c) Common parent.

___ Offeror is not owned or controlled by a common parent

___ Name and TIN of common parent:

Name _____

TIN _____

(End of provision)

52.209-5 CERTIFICATION REGARDING DEBARMENT, SUSPENSION, PROPOSED DEBARMENT, AND OTHER RESPONSIBILITY MATTERS (DEC 2001)

(a)(1) The Offeror certifies, to the best of its knowledge and belief, that--

(i) The Offeror and/or any of its Principals--

(A) Are ( ) are not ( ) presently debarred, suspended, proposed for debarment, or declared ineligible for the award of contracts by any Federal agency;

(B) Have ( ) have not ( ), within a three-year period preceding this offer, been convicted of or had a civil judgment rendered against them for: commission of fraud or a criminal offense in connection with obtaining, attempting to obtain, or performing a public (Federal, state, or local) contract or subcontract; violation of Federal or state antitrust statutes relating to the submission of offers; or commission of embezzlement, theft, forgery, bribery, falsification or destruction of records, making false statements, tax evasion, or receiving stolen property; and

(C) Are ( ) are not ( ) presently indicted for, or otherwise criminally or civilly charged by a governmental entity with, commission of any of the offenses enumerated in subdivision (a)(1)(i)(B) of this provision.

(ii) The Offeror has ( ) has not ( ), within a three-year period preceding this offer, had one or more contracts terminated for default by any Federal agency.

(2) "Principals," for the purposes of this certification, means officers; directors; owners; partners; and, persons having primary management or supervisory responsibilities within a business entity (e.g., general manager; plant manager; head of a subsidiary, division, or business segment, and similar positions).

THIS CERTIFICATION CONCERNS A MATTER WITHIN THE JURISDICTION OF AN AGENCY OF THE UNITED STATES AND THE MAKING OF A FALSE, FICTITIOUS, OR FRAUDULENT CERTIFICATION MAY RENDER THE MAKER SUBJECT TO PROSECUTION UNDER SECTION 1001, TITLE 18, UNITED STATES CODE.

(b) The Offeror shall provide immediate written notice to the Contracting Officer if, at any time prior to contract award, the Offeror learns that its certification was erroneous when submitted or has become erroneous by reason of changed circumstances.

(c) A certification that any of the items in paragraph (a) of this provision exists will not necessarily result in withholding of an award under this solicitation. However, the certification will be considered in connection with a determination of the Offeror's responsibility. Failure of the Offeror to furnish a certification or provide such additional information as requested by the Contracting Officer may render the Offeror nonresponsible.

(d) Nothing contained in the foregoing shall be construed to require establishment of a system of records in order to render, in good faith, the certification required by paragraph (a) of this provision. The knowledge and information of an Offeror is not required to exceed that which is normally possessed by a prudent person in the ordinary course of business dealings.

(e) The certification in paragraph (a) of this provision is a material representation of fact upon which reliance was placed when making award. If it is later determined that the Offeror knowingly rendered an erroneous certification, in addition to other remedies available to the Government, the Contracting Officer may terminate the contract resulting from this solicitation for default.

(End of provision)

52.219-1 SMALL BUSINESS PROGRAM REPRESENTATIONS (APR 2002) - ALTERNATE I (APR 2002)

(a)(1) The North American Industry Classification System (NAICS) code for this acquisition is 236220.
(2) The small business size standard is $28.5 million

(3) The small business size standard for a concern which submits an offer in its own name, other than on a construction or service contract, but which proposes to furnish a product which it did not itself manufacture, is 500 employees.

(b) Representations. (1) The offeror represents as part of its offer that it ( ) is, ( ) is not a small business concern.

(2) (Complete only if the offeror represented itself as a small business concern in paragraph (b)(1) of this provision.) The offeror represents, for general statistical purposes, that it ( ) is, ( ) is not a small disadvantaged business concern as defined in 13 CFR 124.1002.

(3) (Complete only if the offeror represented itself as a small business concern in paragraph (b)(1) of this provision.) The offeror represents as part of its offer that it ( ) is, ( ) is not a women-owned small business concern.

(4) (Complete only if the offeror represented itself as a small business concern in paragraph (b)(1) of this provision.) The offeror represents as part of its offer that it ( ) is, ( ) is not a veteran-owned small business concern.

(5) (Complete only if the offeror represented itself as a veteran-owned small business concern in paragraph (b)(4) of this provision.) The offeror represents as part of its offer that it ( ) is, ( ) is not a service-disabled veteran-owned small business concern.

(6) [Complete only if the offeror represented itself as a small business concern in paragraph (b)(1) of this provision.] The offeror represents, as part of its offer, that--

(i) It ( ) is, ( ) is not a HUBZone small business concern listed, on the date of this representation, on the List of Qualified HUBZone Small Business Concerns maintained by the Small Business Administration, and no material change in ownership and control, principal office, or HUBZone employee percentage has occurred since it was certified by the Small Business Administration in accordance with 13 CFR part 126; and

(ii) It ( ) is, ( ) is not a joint venture that complies with the requirements of 13 CFR part 126, and the representation in paragraph (b)(6)(i) of this provision is accurate for the HUBZone small business concern or concerns that are participating in the joint venture. (The offeror shall enter the name or names of the HUBZone small business concern or concerns that are participating in the joint venture:_____.) Each HUBZone small business concern participating in the joint venture shall submit a separate signed copy of the HUBZone representation.

(7) (Complete if offeror represented itself as disadvantaged in paragraph (b)(2) of this provision.) The offeror shall check the category in which its ownership falls:

____ Black American.

____ Hispanic American.

____ Native American (American Indians, Eskimos, Aleuts, or Native Hawaiians).

____ Asian-Pacific American (persons with origins from Burma, Thailand, Malaysia, Indonesia, Singapore, Brunei, Japan, China, Taiwan, Laos, Cambodia (Kampuchea), Vietnam, Korea, The Philippines, U.S. Trust Territory of the

Pacific Islands (Republic of Palau), Republic of the Marshall Islands, Federated States of Micronesia, the Commonwealth of the Northern Mariana Islands, Guam, Samoa, Macao, Hong Kong, Fiji, Tonga, Kiribati, Tuvalu, or Nauru).

____ Subcontinent Asian (Asian-Indian) American (persons with origins from India, Pakistan, Bangladesh, Sri Lanka, Bhutan, the Maldives Islands, or Nepal).

____ Individual/concern, other than one of the preceding.

(c) Definitions. As used in this provision--

Service-disabled veteran-owned small business concern--

(1) Means a small business concern--

(i) Not less than 51 percent of which is owned by one or more service-disabled veterans or, in the case of any publicly owned business, not less than 51 percent of the stock of which is owned by one or more service-disabled veterans; and

(ii) The management and daily business operations of which are controlled by one or more service-disabled veterans or, in the case of a veteran with permanent and severe disability, the spouse or permanent caregiver of such veteran.

(2) Service-disabled veteran means a veteran, as defined in 38 U.S.C. 101(2), with a disability that is service-connected, as defined in 38 U.S.C. 101(16).

"Small business concern," means a concern, including its affiliates, that is independently owned and operated, not dominant in the field of operation in which it is bidding on Government contracts, and qualified as a small business under the criteria in 13 CFR Part 121 and the size standard in paragraph (a) of this provision.

Veteran-owned small business concern means a small business concern--

(1) Not less than 51 percent of which is owned by one or more veterans (as defined at 38 U.S.C. 101(2)) or, in the case of any publicly owned business, not less than 51 percent of the stock of which is owned by one or more veterans; and

(2) The management and daily business operations of which are controlled by one or more veterans.

"Women-owned small business concern," means a small business concern --

(1) That is at least 51 percent owned by one or more women or, in the case of any publicly owned business, at least 51 percent of the stock of which is owned by one or more women; or

(2) Whose management and daily business operations are controlled by one or more women.

(d) Notice.

(1) If this solicitation is for supplies and has been set aside, in whole or in part, for small business concerns, then the clause in this solicitation providing notice of the set-aside contains restrictions on the source of the end items to be furnished.

(2) Under 15 U.S.C. 645(d), any person who misrepresents a firm's status as a small, HUBZone small, small disadvantaged, or women-owned small business concern in order to obtain a contract to be awarded under the preference programs established pursuant to section 8(a), 8(d), 9, or 15 of the Small Business Act or any other provision of Federal law that specifically references section 8(d) for a definition of program eligibility, shall--

(i) Be punished by imposition of fine, imprisonment, or both;

(ii) Be subject to administrative remedies, including suspension and debarment; and

(iii) Be ineligible for participation in programs conducted under the authority of the Act.

(End of provision)

52.222-22 PREVIOUS CONTRACTS AND COMPLIANCE REPORTS (FEB 1999)

The offeror represents that --

(a) ( ) It has, ( ) has not participated in a previous contract or subcontract subject to the Equal Opportunity clause of this solicitation;

(b) ( ) It has, ( ) has not, filed all required compliance reports; and

(c) Representations indicating submission of required compliance reports, signed by proposed subcontractors, will be obtained before subcontract awards.

(End of provision)

52.223-4 RECOVERED MATERIAL CERTIFICATION (OCT 1997)

As required by the Resource Conservation and Recovery Act of 1976 (42 U.S.C. 6962(c)(3)(A)(i)), the offeror certifies, by signing this offer, that the percentage of recovered materials to be used in the performance of the contract will be at least the amount required by the applicable contract specifications.

(End of provision)

52.223-13 CERTIFICATION OF TOXIC CHEMICAL RELEASE REPORTING (OCT 2000)

(a) Submission of this certification is a prerequisite for making or entering into this contract imposed by Executive Order 12969, August 8, 1995.

(b) By signing this offer, the offeror certifies that--

(1) As the owner or operator of facilities that will be used in the performance of this contract that are subject to the filing and reporting requirements described in section 313 of the Emergency Planning and Community Right-to-Know Act of 1986 (EPCRA) (42 U.S.C. 11023) and section 6607 of the Pollution Prevention Act of 1990 (PPA) (42 U.S.C. 13106), the offeror will file and continue to file for such facilities for the life of the contract the Toxic Chemical Release Inventory Form (Form R) as described in sections 313(a) and (g) of EPCRA and section 6607 of PPA; or

(2) None of its owned or operated facilities to be used in the performance of this contract is subject to the Form R filing and reporting requirements because each such facility is exempt for at least one of the following reasons: (Check each block that is applicable.)

( ) (i) The facility does not manufacture, process or otherwise use any toxic chemicals listed under section 313(c) of EPCRA, 42 U.S.C. 11023(c);

( ) (ii) The facility does not have 10 or more full-time employees as specified in section 313.(b)(1)(A) of EPCRA 42 U.S.C. 11023(b)(1)(A);

( ) (iii) The facility does not meet the reporting thresholds of toxic chemicals established under section 313(f) of EPCRA, 42 U.S.C. 11023(f) (including the alternate thresholds at 40 CFR 372.27, provided an appropriate certification form has been filed with EPA);

( ) (iv) The facility does not fall within Standard Industrial Classification Code (SIC) major groups 20 through 39 or their corresponding North American Industry Classification System (NAICS) sectors 31 through 33; or

( ) (v) The facility is not located within any State of the United States, the District of Columbia, the Commonwealth of Puerto Rico, Guam, American Samoa, the United States Virgin Islands, the Northern Mariana Islands, or any other territory or possession over which the United States has jurisdiction.

(End of clause)

252.209-7001 DISCLOSURE OF OWNERSHIP OR CONTROL BY THE GOVERNMENT OF A TERRORIST COUNTRY (MAR 1998)

(a) "Definitions."

As used in this provision --

(a) "Government of a terrorist country" includes the state and the government of a terrorist country, as well as any political subdivision, agency, or instrumentality thereof.

(2) "Terrorist country" means a country determined by the Secretary of State, under section 6(j)(1)(A) of the Export Administration Act of 1979 (50 U.S.C. App. 2405(j)(i)(A)), to be a country the government of which has repeatedly provided support for such acts of international terrorism. As of the date of this provision, terrorist countries include: Cuba, Iran, Iraq, Libya, North Korea, Sudan, and Syria.

(3) "Significant interest" means --

(i) Ownership of or beneficial interest in 5 percent or more of the firm's or subsidiary's securities. Beneficial interest includes holding 5 percent or more of any class of the firm's securities in "nominee shares," "street names," or some other method of holding securities that does not disclose the beneficial owner;

(ii) Holding a management position in the firm, such as a director or officer;

(iii) Ability to control or influence the election, appointment, or tenure of directors or officers in the firm;

(iv) Ownership of 10 percent or more of the assets of a firm such as equipment, buildings, real estate, or other tangible assets of the firm; or

(v) Holding 50 percent or more of the indebtness of a firm.

(b) "Prohibition on award."

In accordance with 10 U.S.C. 2327, no contract may be awarded to a firm or a subsidiary of a firm if the government of a terrorist country has a significant interest in the firm or subsidiary or, in the case of a subsidiary, the firm that

owns the subsidiary, unless a waiver is granted by the Secretary of Defense.

(c) "Disclosure."

If the government of a terrorist country has a significant interest in the Offeror or a subsidiary of the Offeror, the Offeror shall disclosure such interest in an attachment to its offer. If the Offeror is a subsidiary, it shall also disclose any significant interest the government of a terrorist country has in any firm that owns or controls the subsidiary. The disclosure shall include --

(1) Identification of each government holding a significant interest; and

(2) A description of the significant interest held by each government.

(End of provision)

252.247-7022 REPRESENTATION OF EXTENT OF TRANSPORTATION BY SEA (AUG 1992)

(a) The Offeror shall indicate by checking the appropriate blank in paragraph (b) of this provision whether transportation of supplies by sea is anticipated under the resultant contract. The term supplies is defined in the Transportation of Supplies by Sea clause of this solicitation.

(b) Representation. The Offeror represents that it:

____ (1) Does anticipate that supplies will be transported by sea in the performance of any contract or subcontract resulting from this solicitation.

____ (2) Does not anticipate that supplies will be transported by sea in the performance of any contract or subcontract resulting from this solicitation.

(c) Any contract resulting from this solicitation will include the Transportation of Supplies by Sea clause. If the Offeror represents that it will not use ocean transportation, the resulting contract will also include the Defense FAR Supplement clause at 252.247-7024, Notification of Transportation of Supplies by Sea.

(End of provision)

Section 00700 - Contract Clauses

CLAUSES INCORPORATED BY FULL TEXT

52.202-1 DEFINITIONS (DEC 2001) --ALTERNATE I (MAY 2001)

(a) Agency head or head of the agency means the Secretary (Attorney General, Administrator, Governor, Chairperson, or other chief official, as appropriate) of the agency, unless otherwise indicated, including any deputy or assistant chief official of the executive agency.

(b) "Commercial component" means any component that is a commercial item.

(c) Any item, other than real property, that is of a type customarily used by the general public or by non-governmental entities for purposes other than governmental purposes, and that--

(i) Has been sold, leased, or licensed to the general public; or

(ii) Has been offered for sale, lease, or license to the general public;

(2) Any item that evolved from an item described in paragraph (c)(1) of this clause through advances in technology or performance and that is not yet available in the commercial marketplace, but will be available in the commercial marketplace in time to satisfy the delivery requirements under a Government solicitation;

(3) Any item that would satisfy a criterion expressed in paragraphs (c)(1) or (c)(2) of this clause, but for--

(i) Modifications of a type customarily available in the commercial marketplace; or

(ii) Minor modifications of a type not customarily available in the commercial marketplace made to meet Federal Government requirements. "Minor" modifications means modifications that do not significantly alter the nongovernmental function or essential physical characteristics of an item or component, or change the purpose of a process. Factors to be considered in determining whether a modification is minor include the value and size of the modification and the comparative value and size of the final product. Dollar values and percentages may be used as guideposts, but are not conclusive evidence that a modification is minor;

(4) Any combination of items meeting the requirements of paragraphs (c)(1), (2), (3), or (5) of this clause that are of a type customarily combined and sold in combination to the general public;

(5) Installation services, maintenance services, repair services, training services, and other services if--

(i) Such services are procured for support of an item referred to in paragraph (c)(1), (2), (3), or (4) of this definition, regardless of whether such services are provided by the same source or at the same time as the item; and

(ii) The source of such services provides similar services contemporaneously to the general public under terms and conditions similar to those offered to the Federal Government;

(6) Services of a type offered and sold competitively in substantial quantities in the commercial marketplace based on established catalog or market prices for specific tasks performed under standard commercial terms and conditions. This does not include services that are sold based on hourly rates without an established catalog or market price for a specific service performed. For purposes of these services--

(i) Catalog price means a price included in a catalog, price list, schedule, or other form that is regularly maintained by the manufacturer or vendor, is either published or otherwise available for inspection by customers, and states

prices at which sales are currently, or were last, made to a significant number of buyers constituting the general public; and

(ii) Market prices means current prices that are established in the course of ordinary trade between buyers and sellers free to bargain and that can be substantiated through competition or from sources independent of the offerors.

(7) Any item, combination of items, or service referred to in subparagraphs (c)(1) through (c)(6), notwithstanding the fact that the item, combination of items, or service is transferred between or among separate divisions, subsidiaries, or affiliates of a Contractor; or

(8) A nondevelopmental item, if the procuring agency determines the item was developed exclusively at private expense and sold in substantial quantities, on a competitive basis, to multiple State and local Governments.

(d) Component means any item supplied to the Government as part of an end item or of another component, except that for use in 52.225-9, and 52.225-11 see the definitions in 52.225-9(a) and 52.225-11(a).

(e) Contracting Officer means a person with the authority to enter into, administer, and/or terminate contracts and make related determinations and findings. The term includes certain authorized representatives of the Contracting Officer acting within the limits of their authority as delegated by the Contracting Officer.

(f) Nondevelopmental item means--

(1) Any previously developed item of supply used exclusively for governmental purposes by a Federal agency, a State or local government, or a foreign government with which the United States has a mutual defense cooperation agreement;

(2) Any item described in paragraph (f)(1) of this definition that requires only minor modification or modifications of a type customarily available in the commercial marketplace in order to meet the requirements of the procuring department or agency; or

(3) Any item of supply being produced that does not meet the requirements of paragraph (f)(1) or (f)(2) solely because the item is not yet in use.

(End of clause)

52.203-3 GRATUITIES (APR 1984)

(a) The right of the Contractor to proceed may be terminated by written notice if, after notice and hearing, the agency head or a designee determines that the Contractor, its agent, or another representative--

(1) Offered or gave a gratuity (e.g., an entertainment or gift) to an officer, official, or employee of the Government; and

(2) Intended, by the gratuity, to obtain a contract or favorable treatment under a contract.

(b) The facts supporting this determination may be reviewed by any court having lawful jurisdiction.

(c) If this contract is terminated under paragraph (a) of this clause, the Government is entitled--

(1) To pursue the same remedies as in a breach of the contract; and

(2) In addition to any other damages provided by law, to exemplary damages of not less than 3 nor more than 10

times the cost incurred by the Contractor in giving gratuities to the person concerned, as determined by the agency head or a designee. (This subparagraph (c)(2) is applicable only if this contract uses money appropriated to the Department of Defense.)

(d) The rights and remedies of the Government provided in this clause shall not be exclusive and are in addition to any other rights and remedies provided by law or under this contract.

(End of clause)

52.203-5 COVENANT AGAINST CONTINGENT FEES (APR 1984)

(a) The Contractor warrants that no person or agency has been employed or retained to solicit or obtain this contract upon an agreement or understanding for a contingent fee, except a bona fide employee or agency. For breach or violation of this warranty, the Government shall have the right to annul this contract without liability or, in its discretion, to deduct from the contract price or consideration, or otherwise recover, the full amount of the contingent fee.

(b) "Bona fide agency," as used in this clause, means an established commercial or selling agency, maintained by a contractor for the purpose of securing business, that neither exerts nor proposes to exert improper influence to solicit or obtain Government contracts nor holds itself out as being able to obtain any Government contract or contracts through improper influence.

"Bona fide employee," as used in this clause, means a person, employed by a contractor and subject to the contractor's supervision and control as to time, place, and manner of performance, who neither exerts nor proposes to exert improper influence to solicit or obtain Government contracts nor holds out as being able to obtain any Government contract or contracts through improper influence.

"Contingent fee," as used in this clause, means any commission, percentage, brokerage, or other fee that is contingent upon the success that a person or concern has in securing a Government contract.

"Improper influence," as used in this clause, means any influence that induces or tends to induce a Government employee or officer to give consideration or to act regarding a Government contract on any basis other than the merits of the matter.

(End of clause)

52.203-6 RESTRICTIONS ON SUBCONTRACTOR SALES TO THE GOVERNMENT (JUL 1995)

(a) Except as provided in (b) of this clause, the Contractor shall not enter into any agreement with an actual or prospective subcontractor, nor otherwise act in any manner, which has or may have the effect of restricting sales by such subcontractors directly to the Government of any item or process (including computer software) made or furnished by the subcontractor under this contract or under any follow-on production contract.

(b) The prohibition in (a) of this clause does not preclude the Contractor from asserting rights that are otherwise authorized by law or regulation.

(c) The Contractor agrees to incorporate the substance of this clause, including this paragraph (c), in all subcontracts under this contract which exceed $100,000.

52.203-7 ANTI-KICKBACK PROCEDURES. (JUL 1995)

(a) Definitions.

"Kickback," as used in this clause, means any money, fee, commission, credit, gift, gratuity, thing of value, or compensation of any kind which is provided, directly or indirectly, to any prime Contractor, prime Contractor employee, subcontractor, or subcontractor employee for the purpose of improperly obtaining or rewarding favorable treatment in connection with a prime contract or in connection with a subcontract relating to a prime contract.

"Person," as used in this clause, means a corporation, partnership, business association of any kind, trust, joint-stock company, or individual.

"Prime contract," as used in this clause, means a contract or contractual action entered into by the United States for the purpose of obtaining supplies, materials, equipment, or services of any kind.

"Prime Contractor," as used in this clause, means a person who has entered into a prime contract with the United States.

"Prime Contractor employee," as used in this clause, means any officer, partner, employee, or agent of a prime Contractor.

"Subcontract," as used in this clause, means a contract or contractual action entered into by a prime Contractor or subcontractor for the purpose of obtaining supplies, materials, equipment, or services of any kind under a prime contract.

"Subcontractor," as used in this clause, (1) means any person, other than the prime Contractor, who offers to furnish or furnishes any supplies, materials, equipment, or services of any kind under a prime contract or a subcontract entered into in connection with such prime contract, and (2) includes any person who offers to furnish or furnishes general supplies to the prime Contractor or a higher tier subcontractor.

"Subcontractor employee," as used in this clause, means any officer, partner, employee, or agent of a subcontractor.

(b) The Anti-Kickback Act of 1986 (41 U.S.C. 51-58) (the Act), prohibits any person from -

(1) Providing or attempting to provide or offering to provide any kickback;

(2) Soliciting, accepting, or attempting to accept any kickback; or

(3) Including, directly or indirectly, the amount of any kickback in the contract price charged by a prime Contractor to the United States or in the contract price charged by a subcontractor to a prime Contractor or higher tier subcontractor.

(c)(1) The Contractor shall have in place and follow reasonable procedures designed to prevent and detect possible violations described in paragraph (b) of this clause in its own operations and direct business relationships.

(2) When the Contractor has reasonable grounds to believe that a violation described in paragraph (b) of this clause may have occurred, the Contractor shall promptly report in writing the possible violation. Such reports shall be made to the inspector general of the contracting agency, the head of the contracting agency if the agency does not have an inspector general, or the Department of Justice.

(3) The Contractor shall cooperate fully with any Federal agency investigating a possible violation described in paragraph (b) of this clause.

(4) The Contracting Officer may (i) offset the amount of the kickback against any monies owed by the United States

under the prime contract and/or (ii) direct that the Prime Contractor withhold, from sums owed a subcontractor under the prime contract, the amount of any kickback. The Contracting Officer may order the monies withheld under subdivision (c)(4)(ii) of this clause be paid over to the Government unless the Government has already offset those monies under subdivision (c)(4)(i) of this clause. In either case, the Prime Contractor shall notify the Contracting Officer when the monies are withheld.

(5) The Contractor agrees to incorporate the substance of this clause, including this subparagraph (c)(5) but excepting subparagraph (c)(1), in all subcontracts under this contract which exceed $100,000.

52.203-8 CANCELLATION, RESCISSION, AND RECOVERY OF FUNDS FOR ILLEGAL OR IMPROPER ACTIVITY (JAN 1997)

(a) If the Government receives information that a contractor or a person has engaged in conduct constituting a violation of subsection (a), (b), (c), or (d) of Section 27 of the Office of Federal Procurement Policy Act (41 U.S.C. 423) (the Act), as amended by section 4304 of the 1996 National Defense Authorization Act for Fiscal Year 1996 (Pub. L. 104-106), the Government may--

(1) Cancel the solicitation, if the contract has not yet been awarded or issued; or

(2) Rescind the contract with respect to which--

(i) The Contractor or someone acting for the Contractor has been convicted for an offense where the conduct constitutes a violation of subsection 27(a) or (b) of the Act for the purpose of either--

(A) Exchanging the information covered by such subsections for anything of value; or

(B) Obtaining or giving anyone a competitive advantage in the award of a Federal agency procurement contract; or

(ii) The head of the contracting activity has determined, based upon a preponderance of the evidence, that the Contractor or someone acting for the Contractor has engaged in conduct constituting an offense punishable under subsections 27(e)(1) of the Act.

(b) If the Government rescinds the contract under paragraph (a) of this clause, the Government is entitled to recover, in addition to any penalty prescribed by law, the amount expended under the contract.

(c) The rights and remedies of the Government specified herein are not exclusive, and are in addition to any other rights and remedies provided by law, regulation, or under this contract.

(End of clause)

52.203-10 PRICE OR FEE ADJUSTMENT FOR ILLEGAL OR IMPROPER ACTIVITY (JAN 1997)

(a) The Government, at its election, may reduce the price of a fixed-price type contract and the total cost and fee under a cost-type contract by the amount of profit or fee determined as set forth in paragraph (b) of this clause if the head of the contracting activity or designee determines that there was a violation of subsection 27 (a), (b), or (c) of the Office of Federal Procurement Policy Act, as amended (41 U.S.C. 423), as implemented in section 3.104 of the Federal Acquisition Regulation.

(b) The price or fee reduction referred to in paragraph (a) of this clause shall be--

(1) For cost-plus-fixed-fee contracts, the amount of the fee specified in the contract at the time of award;

(2) For cost-plus-incentive-fee contracts, the target fee specified in the contract at the time of award, notwithstanding any minimum fee or "fee floor" specified in the contract;

(3) For cost-plus-award-fee contracts--

(i) The base fee established in the contract at the time of contract award;

(ii) If no base fee is specified in the contract, 30 percent of the amount of each award fee otherwise payable to the Contractor for each award fee evaluation period or at each award fee determination point.

(4) For fixed-price-incentive contracts, the Government may--

(i) Reduce the contract target price and contract target profit both by an amount equal to the initial target profit specified in the contract at the time of contract award; or

(ii) If an immediate adjustment to the contract target price and contract target profit would have a significant adverse impact on the incentive price revision relationship under the contract, or adversely affect the contract financing provisions, the Contracting Officer may defer such adjustment until establishment of the total final price of the contract. The total final price established in accordance with the incentive price revision provisions of the contract shall be reduced by an amount equal to the initial target profit specified in the contract at the time of contract award and such reduced price shall be the total final contract price.

(5) For firm-fixed-price contracts, by 10 percent of the initial contract price or a profit amount determined by the Contracting Officer from records or documents in existence prior to the date of the contract award.

(c) The Government may, at its election, reduce a prime contractor's price or fee in accordance with the procedures of paragraph (b) of this clause for violations of the Act by its subcontractors by an amount not to exceed the amount of profit or fee reflected in the subcontract at the time the subcontract was first definitively priced.

(d) In addition to the remedies in paragraphs (a) and (c) of this clause, the Government may terminate this contract for default. The rights and remedies of the Government specified herein are not exclusive, and are in addition to any other rights and remedies provided by law or under this contract.

(End of clause)

52.203-12 LIMITATION ON PAYMENTS TO INFLUENCE CERTAIN FEDERAL TRANSACTIONS (JUN 1997)

(a) Definitions.

"Agency," as used in this clause, means executive agency as defined in 2.101.

"Covered Federal action," as used in this clause, means any of the following Federal actions:

(1) The awarding of any Federal contract.

(2) The making of any Federal grant.

(3) The making of any Federal loan.

(4) The entering into of any cooperative agreement.

(5) The extension, continuation, renewal, amendment, or modification of any Federal contract, grant, loan, or cooperative agreement.

"Indian tribe" and "tribal organization," as used in this clause, have the meaning provided in section 4 of the Indian Self-Determination and Education Assistance Act (25 U.S.C. 450B) and include Alaskan Natives.

"Influencing or attempting to influence," as used in this clause, means making, with the intent to influence, any communication to or appearance before an officer or employee of any agency, a Member of Congress, an officer or employee of Congress, or an employee of a Member of Congress in connection with any covered Federal action.

"Local government," as used in this clause, means a unit of government in a State and, if chartered, established, or otherwise recognized by a State for the performance of a governmental duty, including a local public authority, a special district, an intrastate district, a council of governments, a sponsor group representative organization, and any other instrumentality of a local government.

"Officer or employee of an agency," as used in this clause, includes the following individuals who are employed by an agency:

(1) An individual who is appointed to a position in the Government under Title 5, United States Code, including a position under a temporary appointment.

(2) A member of the uniformed services, as defined in subsection 101(3), Title 37, United States Code.

(3) A special Government employee, as defined in section 202, Title 18, United States Code.

(4) An individual who is a member of a Federal advisory committee, as defined by the Federal Advisory Committee Act, Title 5, United States Code, appendix 2.

"Person," as used in this clause, means an individual, corporation, company, association, authority, firm, partnership, society, State, and local government, regardless of whether such entity is operated for profit, or not for profit. This term excludes an Indian tribe, tribal organization, or any other Indian organization with respect to expenditures specifically permitted by other Federal law.

"Reasonable compensation," as used in this clause, means, with respect to a regularly employed officer or employee of any person, compensation that is consistent with the normal compensation for such officer or employee for work that is not furnished to, not funded by, or not furnished in cooperation with the Federal Government.

"Reasonable payment," as used in this clause, means, with respect to professional and other technical services, a payment in an amount that is consistent with the amount normally paid for such services in the private sector.

"Recipient," as used in this clause, includes the Contractor and all subcontractors. This term excludes an Indian tribe, tribal organization, or any other Indian organization with respect to expenditures specifically permitted by other Federal law.

"Regularly employed," as used in this clause, means, with respect to an officer or employee of a person requesting or receiving a Federal contract, an officer or employee who is employed by such person for at least 130 working days within 1 year immediately preceding the date of the submission that initiates agency consideration of such person for receipt of such contract. An officer or employee who is employed by such person for less than 130 working days within 1 year immediately preceding the date of the submission that initiates agency consideration of such person shall be considered to be regularly employed as soon as he or she is employed by such person for 130 working days.

"State," as used in this clause, means a State of the United States, the District of Columbia, the Commonwealth of Puerto Rico, a territory or possession of the United States, an agency or instrumentality of a State, and multi-State, regional, or interstate entity having governmental duties and powers.

(b) Prohibitions.

(1) Section 1352 of Title 31, United States Code, among other things, prohibits a recipient of a Federal contract, grant, loan, or cooperative agreement from using appropriated funds to pay any person for influencing or attempting to influence an officer or employee of any agency, a Member of Congress, an officer or employee of Congress, or an employee of a Member of Congress in connection with any of the following covered Federal actions: the awarding of any Federal contract; the making of any Federal grant; the making of any Federal loan; the entering into of any cooperative agreement; or the modification of any Federal contract, grant, loan, or cooperative agreement.

(2) The Act also requires Contractors to furnish a disclosure if any funds other than Federal appropriated funds (including profit or fee received under a covered Federal transaction) have been paid, or will be paid, to any person for influencing or attempting to influence an officer or employee of any agency, a Member of Congress, an officer or employee of Congress, or an employee of a Member of Congress in connection with a Federal contract, grant, loan, or cooperative agreement.

(3) The prohibitions of the Act do not apply under the following conditions:

(i) Agency and legislative liaison by own employees.

(A) The prohibition on the use of appropriated funds, in subparagraph (b)(1) of this clause, does not apply in the case of a payment of reasonable compensation made to an officer or employee of a person requesting or receiving a covered Federal action if the payment is for agency and legislative liaison activities not directly related to a covered Federal action.

(B) For purposes of subdivision (b)(3)(i)(A) of this clause, providing any information specifically requested by an agency or Congress is permitted at any time.

(C) The following agency and legislative liaison activities are permitted at any time where they are not related to a specific solicitation for any covered Federal action:

(1) Discussing with an agency the qualities and characteristics (including individual demonstrations) of the person's products or services, conditions or terms of sale, and service capabilities.

(2) Technical discussions and other activities regarding the application or adaptation of the person's products or services for an agency's use.

(D) The following agency and legislative liaison activities are permitted where they are prior to formal solicitation of any covered Federal action--

(1) Providing any information not specifically requested but necessary for an agency to make an informed decision about initiation of a covered Federal action;

(2) Technical discussions regarding the preparation of an unsolicited proposal prior to its official submission; and

(3) Capability presentations by persons seeking awards from an agency pursuant to the provisions of the Small Business Act, as amended by Pub. L. 95-507, and subsequent amendments.

(E) Only those services expressly authorized by subdivision (b)(3)(i)(A) of this clause are permitted under this clause.

(ii) Professional and technical services.

(A) The prohibition on the use of appropriated funds, in subparagraph (b)(1) of this clause, does not apply in the case of--

(1) A payment of reasonable compensation made to an officer or employee of a person requesting or receiving a covered Federal action or an extension, continuation, renewal, amendment, or modification of a covered Federal action, if payment is for professional or technical services rendered directly in the preparation, submission, or negotiation of any bid, proposal, or application for that Federal action or for meeting requirements imposed by or pursuant to law as a condition for receiving that Federal action.

(2) Any reasonable payment to a person, other than an officer or employee of a person requesting or receiving a covered Federal action or an extension, continuation, renewal, amendment, or modification of a covered Federal action if the payment is for professional or technical services rendered directly in the preparation, submission, or negotiation of any bid, proposal, or application for that Federal action or for meeting requirements imposed by or pursuant to law as a condition for receiving that Federal action. Persons other than officers or employees of a person requesting or receiving a covered Federal action include consultants and trade associations.

(B) For purposes of subdivision (b)(3)(ii)(A) of this clause, "professional and technical services" shall be limited to advice and analysis directly applying any professional or technical discipline. For example, drafting of a legal document accompanying a bid or proposal by a lawyer is allowable. Similarly, technical advice provided by an engineer on the performance or operational capability of a piece of equipment rendered directly in the negotiation of a contract is allowable. However, communications with the intent to influence made by a professional (such as a licensed lawyer) or a technical person (such as a licensed accountant) are not allowable under this section unless they provide advice and analysis directly applying their professional or technical expertise and unless the advice or analysis is rendered directly and solely in the preparation, submission or negotiation of a covered Federal action. Thus, for example, communications with the intent to influence made by a lawyer that do not provide legal advice or analysis directly and solely related to the legal aspects of his or her client's proposal, but generally advocate one proposal over another are not allowable under this section because the lawyer is not providing professional legal services. Similarly, communications with the intent to influence made by an engineer providing an engineering analysis prior to the preparation or submission of a bid or proposal are not allowable under this section since the engineer is providing technical services but not directly in the preparation, submission or negotiation of a covered Federal action.

(C) Requirements imposed by or pursuant to law as a condition for receiving a covered Federal award include those required by law or regulation and any other requirements in the actual award documents.

(D) Only those services expressly authorized by subdivisions (b)(3)(ii)(A)(1) and (2) of this clause are permitted under this clause.

(E) The reporting requirements of FAR 3.803(a) shall not apply with respect to payments of reasonable compensation made to regularly employed officers or employees of a person.

(c) Disclosure.

(1) The Contractor who requests or receives from an agency a Federal contract shall file with that agency a disclosure form, OMB standard form LLL, Disclosure of Lobbying Activities, if such person has made or has agreed to make any payment using nonappropriated funds (to include profits from any covered Federal action), which would be prohibited under subparagraph (b)(1) of this clause, if paid for with appropriated funds.

(2) The Contractor shall file a disclosure form at the end of each calendar quarter in which there occurs any event that materially affects the accuracy of the information contained in any disclosure form previously filed by such person under subparagraph (c)(1) of this clause. An event that materially affects the accuracy of the information reported includes--

(i) A cumulative increase of $25,000 or more in the amount paid or expected to be paid for influencing or attempting to influence a covered Federal action; or

(ii) A change in the person(s) or individual(s) influencing or attempting to influence a covered Federal action; or

(iii) A change in the officer(s), employee(s), or Member(s) contacted to influence or attempt to influence a covered Federal action.

(3) The Contractor shall require the submittal of a certification, and if required, a disclosure form by any person who requests or receives any subcontract exceeding $100,000 under the Federal contract.

(4) All subcontractor disclosure forms (but not certifications) shall be forwarded from tier to tier until received by the prime Contractor. The prime Contractor shall submit all disclosures to the Contracting Officer at the end of the calendar quarter in which the disclosure form is submitted by the subcontractor. Each subcontractor certification shall be retained in the subcontract file of the awarding Contractor.

(d) Agreement. The Contractor agrees not to make any payment prohibited by this clause.

(e) Penalties.

(1) Any person who makes an expenditure prohibited under paragraph (a) of this clause or who fails to file or amend the disclosure form to be filed or amended by paragraph (b) of this clause shall be subject to civil penalties as provided for by 31 U.S.C. 1352. An imposition of a civil penalty does not prevent the Government from seeking any other remedy that may be applicable.

(2) Contractors may rely without liability on the representation made by their subcontractors in the certification and disclosure form.

(f) Cost allowability. Nothing in this clause makes allowable or reasonable any costs which would otherwise be unallowable or unreasonable. Conversely, costs made specifically unallowable by the requirements in this clause will not be made allowable under any other provision.

(End of clause)

52.204-4 PRINTED OR COPIED DOUBLE-SIDED ON RECYCLED PAPER (AUG 2000)

(a) Definitions. As used in this clause--

“Postconsumer material” means a material or finished product that has served its intended use and has been discarded for disposal or recovery, having completed its life as a consumer item. Postconsumer material is a part of the broader category of “recovered material.” For paper and paper products, postconsumer material means “postconsumer fiber” defined by the U.S. Environmental Protection Agency (EPA) as--

(1) Paper, paperboard, and fibrous materials from retail stores, office buildings, homes, and so forth, after they have passed through their end-usage as a consumer item, including: used corrugated boxes; old newspapers; old magazines; mixed waste paper; tabulating cards; and used cordage; or

(2) All paper, paperboard, and fibrous materials that enter and are collected from municipal solid waste; but not

(3) Fiber derived from printers' over-runs, converters' scrap, and over-issue publications.

“Printed or copied double-sided” means printing or reproducing a document so that information is on both sides of a sheet of paper.

“Recovered material,” for paper and paper products, is defined by EPA in its Comprehensive Procurement Guideline as “recovered fiber” and means the following materials:

(1) Postconsumer fiber; and

(2) Manufacturing wastes such as--

(i) Dry paper and paperboard waste generated after completion of the papermaking process (that is, those manufacturing operations up to and including the cutting and trimming of the paper machine reel into smaller rolls or rough sheets) including: envelope cuttings, bindery trimmings, and other paper and paperboard waste resulting from printing, cutting, forming, and other converting operations; bag, box, and carton manufacturing wastes; and butt rolls, mill wrappers, and rejected unused stock; and

(ii) Repulped finished paper and paperboard from obsolete inventories of paper and paperboard manufacturers, merchants, wholesalers, dealers, printers, converters, or others.

(b) In accordance with Section 101 of Executive Order 13101 of September 14, 1998, Greening the Government through Waste Prevention, Recycling, and Federal Acquisition, the Contractor is encouraged to submit paper documents, such as offers, letters, or reports, that are printed or copied double-sided on recycled paper that meet minimum content standards specified in Section 505 of Executive Order 13101, when not using electronic commerce methods to submit information or data to the Government.

(c) If the Contractor cannot purchase high-speed copier paper, offset paper, forms bond, computer printout paper, carbonless paper, file folders, white wove envelopes, writing and office paper, book paper, cotton fiber paper, and cover stock meeting the 30 percent postconsumer material standard for use in submitting paper documents to the Government, it should use paper containing no less than 20 percent postconsumer material. This lesser standard should be used only when paper meeting the 30 percent postconsumer material standard is not obtainable at a reasonable price or does not meet reasonable performance standards.

(End of clause)

52.209-6 PROTECTING THE GOVERNMENT'S INTEREST WHEN SUBCONTRACTING WITH CONTRACTORS DEBARRED, SUSPENDED, OR PROPOSED FOR DEBARMENT (JUL 1995)

(a) The Government suspends or debars Contractors to protect the Government's interests. The Contractor shall not enter into any subcontract in excess of the $25,000 with a Contractor that is debarred, suspended, or proposed for debarment unless there is a compelling reason to do so.

(b) The Contractor shall require each proposed first-tier subcontractor, whose subcontract will exceed $25,000, to disclose to the Contractor, in writing, whether as of the time of award of the subcontract, the subcontractor, or its principles, is or is not debarred, suspended, or proposed for debarment by the Federal Government.

(c) A corporate officer or a designee of the Contractor shall notify the Contracting Officer, in writing, before entering into a subcontract with a party that is debarred, suspended, or proposed for debarment (see FAR 9.404 for information on the List of Parties Excluded from Federal Procurement and Nonprocurement Programs). The notice must include the following:

(1) The name of the subcontractor.

(2) The Contractor's knowledge of the reasons for the subcontractor being on the List of Parties Excluded from Federal Procurement and Nonprocurement Programs.

(3) The compelling reason(s) for doing business with the subcontractor notwithstanding its inclusion on the List of Parties Excluded from Federal Procurement and Nonprocurement Programs.

(4) The systems and procedures the Contractor has established to ensure that it is fully protecting the Government's interests when dealing with such subcontractor in view of the specific basis for the party's debarment, suspension, or proposed debarment.

(End of clause)

52.211-15 DEFENSE PRIORITY AND ALLOCATION REQUIREMENTS (SEP 1990)

This is a rated order certified for national defense use, and the Contractor shall follow all the requirements of the Defense Priorities and Allocations System regulation (15 CFR 700).

(End of clause)

52.215-2 AUDIT AND RECORDS--NEGOTIATION (JUN 1999)

(a) As used in this clause, "records" includes books, documents, accounting procedures and practices, and other data, regardless of type and regardless of whether such items are in written form, in the form of computer data, or in any other form.

(b) Examination of costs. If this is a cost-reimbursement, incentive, time-and-materials, labor-hour, or price redeterminable contract, or any combination of these, the Contractor shall maintain and the Contracting Officer, or an authorized representative of the Contracting Officer, shall have the right to examine and audit all records and other evidence sufficient to reflect properly all costs claimed to have been incurred or anticipated to be incurred directly or indirectly in performance of this contract. This right of examination shall include inspection at all reasonable times of the Contractor's plants, or parts of them, engaged in performing the contract.

(c) Cost or pricing data. If the Contractor has been required to submit cost or pricing data in connection with any pricing action relating to this contract, the Contracting Officer, or an authorized representative of the Contracting Officer, in order to evaluate the accuracy, completeness, and currency of the cost or pricing data, shall have the right to examine and audit all of the Contractor's records, including computations and projections, related to--

(1) The proposal for the contract, subcontract, or modification;

(2) The discussions conducted on the proposal(s), including those related to negotiating;

(3) Pricing of the contract, subcontract, or modification; or

(4) Performance of the contract, subcontract or modification.

(d) Comptroller General--(1) The Comptroller General of the United States, or an authorized representative, shall have access to and the right to examine any of the Contractor's directly pertinent records involving transactions related to this contract or a subcontract hereunder.

(2) This paragraph may not be construed to require the Contractor or subcontractor to create or maintain any record

that the Contractor or subcontractor does not maintain in the ordinary course of business or pursuant to a provision of law.

(e) Reports. If the Contractor is required to furnish cost, funding, or performance reports, the Contracting Officer or an authorized representative of the Contracting Officer shall have the right to examine and audit the supporting records and materials, for the purpose of evaluating (1) the effectiveness of the Contractor's policies and procedures to produce data compatible with the objectives of these reports and (2) the data reported.

(f) Availability. The Contractor shall make available at its office at all reasonable times the records, materials, and other evidence described in paragraphs (a), (b), (c), (d), and (e) of this clause, for examination, audit, or reproduction, until 3 years after final payment under this contract or for any shorter period specified in Subpart 4.7, Contractor Records Retention, of the Federal Acquisition Regulation (FAR), or for any longer period required by statute or by other clauses of this contract. In addition--

(1) If this contract is completely or partially terminated, the Contractor shall make available the records relating to the work terminated until 3 years after any resulting final termination settlement; and

(2) The Contractor shall make available records relating to appeals under the Disputes clause or to litigation or the settlement of claims arising under or relating to this contract until such appeals, litigation, or claims are finally resolved.

(g) The Contractor shall insert a clause containing all the terms of this clause, including this paragraph (g), in all subcontracts under this contract that exceed the simplified acquisition threshold, and--

(1) That are cost-reimbursement, incentive, time-and-materials, labor-hour, or price-redeterminable type or any combination of these;

(2) For which cost or pricing data are required; or

(3) That require the subcontractor to furnish reports as discussed in paragraph (e) of this clause.

The clause may be altered only as necessary to identify properly the contracting parties and the Contracting Officer under the Government prime contract.

(End of clause)

52.215-11 PRICE REDUCTION FOR DEFECTIVE COST OR PRICING DATA--MODIFICATIONS (OCT 1997)

(a) This clause shall become operative only for any modification to this contract involving a pricing adjustment expected to exceed the threshold for submission of cost or pricing data at FAR 15.403-4, except that this clause does not apply to any modification if an exception under FAR 15.403-1 applies.

(b) If any price, including profit or fee, negotiated in connection with any modification under this clause, or any cost reimbursable under this contract, was increased by any significant amount because (1) the Contractor or a subcontractor furnished cost or pricing data that were not complete, accurate, and current as certified in its Certificate of Current Cost or Pricing Data, (2) a subcontractor or prospective subcontractor furnished the Contractor cost or pricing data that were not complete, accurate, and current as certified in the Contractor's Certificate of Current Cost or Pricing Data, or (3) any of these parties furnished data of any description that were not accurate, the price or cost shall be reduced accordingly and the contract shall be modified to reflect the reduction. This right to a price reduction is limited to that resulting from defects in data relating to modifications for which this clause becomes operative under paragraph (a) of this clause.

(c) Any reduction in the contract price under paragraph (b) of this clause due to defective data from a prospective subcontractor that was not subsequently awarded the subcontract shall be limited to the amount, plus applicable overhead and profit markup, by which--

(1) The actual subcontract; or

(2) The actual cost to the Contractor, if there was no subcontract, was less than the prospective subcontract cost estimate submitted by the Contractor; provided, that the actual subcontract price was not itself affected by defective cost or pricing data.

(d)(1) If the Contracting Officer determines under paragraph (b) of this clause that a price or cost reduction should be made, the Contractor agrees not to raise the following matters as a defense:

(i) The Contractor or subcontractor was a sole source supplier or otherwise was in a superior bargaining position and thus the price of the contract would not have been modified even if accurate, complete, and current cost or pricing data had been submitted.

(ii) The Contracting Officer should have known that the cost or pricing data in issue were defective even though the Contractor or subcontractor took no affirmative action to bring the character of the data to the attention of the Contracting Officer.

(iii) The contract was based on an agreement about the total cost of the contract and there was no agreement about the cost of each item procured under the contract.

(iv) The Contractor or subcontractor did not submit a Certificate of Current Cost or Pricing Data.

(2)(i) Except as prohibited by subdivision (d)(2)(ii) of this clause, an offset in an amount determined appropriate by the Contracting Officer based upon the facts shall be allowed against the amount of a contract price reduction if--

(A) The Contractor certifies to the Contracting Officer that, to the best of the Contractor's knowledge and belief, the Contractor is entitled to the offset in the amount requested; and

(B) The Contractor proves that the cost or pricing data were available before the “as of” date specified on its Certificate of Current Cost or Pricing Data, and that the data were not submitted before such date.

(ii) An offset shall not be allowed if--

(A) The understated data were known by the Contractor to be understated before the “as of” date specified on its Certificate of Current Cost or Pricing Data; or

(B) The Government proves that the facts demonstrate that the contract price would not have increased in the amount to be offset even if the available data had been submitted before the “as of” date specified on its Certificate of Current Cost or Pricing Data.

(e) If any reduction in the contract price under this clause reduces the price of items for which payment was made prior to the date of the modification reflecting the price reduction, the Contractor shall be liable to and shall pay the United States at the time such overpayment is repaid--

(1) Simple interest on the amount of such overpayment to be computed from the date(s) of overpayment to the Contractor to the date the Government is repaid by the Contractor at the applicable underpayment rate effective for each quarter prescribed by the Secretary of the Treasury under 26 U.S.C. 6621(a)(2); and

A penalty equal to the amount of the overpayment, if the Contractor or subcontractor knowingly submitted cost or pricing data that were incomplete, inaccurate, or noncurrent.

(End of clause)

52.215-13 SUBCONTRACTOR COST OR PRICING DATA--MODIFICATIONS (OCT 1997)

(a) The requirements of paragraphs (b) and (c) of this clause shall--

(1) Become operative only for any modification to this contract involving a pricing adjustment expected to exceed the threshold for submission of cost or pricing data at FAR 15.403-4; and

(2) Be limited to such modifications.

(b) Before awarding any subcontract expected to exceed the threshold for submission of cost or pricing data at FAR 15.403-4, on the date of agreement on price or the date of award, whichever is later; or before pricing any subcontract modification involving a pricing adjustment expected to exceed the threshold for submission of cost or pricing data at FAR 15.403-4, the Contractor shall require the subcontractor to submit cost or pricing data (actually or by specific identification in writing), unless an exception under FAR 15.403-1 applies.

(c) The Contractor shall require the subcontractor to certify in substantially the form prescribed in FAR 15.406-2 that, to the best of its knowledge and belief, the data submitted under paragraph (b) of this clause were accurate, complete, and current as of the date of agreement on the negotiated price of the subcontract or subcontract modification.

The Contractor shall insert the substance of this clause, including this paragraph (d), in each subcontract that exceeds the threshold for submission of cost or pricing data at FAR 15.403-4 on the date of agreement on price or the date of award, whichever is later.

(End of clause)

52.215-21 REQUIREMENTS FOR COST OR PRICING DATA OR INFORMATION OTHER THAN COST OR PRICING DATA--MODIFICATIONS (OCT 1997)

(a) Exceptions from cost or pricing data. (1) In lieu of submitting cost or pricing data for modifications under this contract, for price adjustments expected to exceed the threshold set forth at FAR 15.403-4 on the date of the agreement on price or the date of the award, whichever is later, the Contractor may submit a written request for exception by submitting the information described in the following subparagraphs. The Contracting Officer may require additional supporting information, but only to the extent necessary to determine whether an exception should be granted, and whether the price is fair and reasonable--

(i) Identification of the law or regulation establishing the price offered. If the price is controlled under law by periodic rulings, reviews, or similar actions of a governmental body, attach a copy of the controlling document, unless it was previously submitted to the contracting office.

(ii) Information on modifications of contracts or subcontracts for commercial items. (A) If--

(1) The original contract or subcontract was granted an exception from cost or pricing data requirements because the price agreed upon was based on adequate price competition or prices set by law or regulation, or was a contract or subcontract for the acquisition of a commercial item; and

(2) The modification (to the contract or subcontract) is not exempted based on one of these exceptions, then the Contractor may provide information to establish that the modification would not change the contract or subcontract from a contract or subcontract for the acquisition of a commercial item to a contract or subcontract for the

acquisition of an item other than a commercial item.

(B) For a commercial item exception, the Contractor shall provide, at a minimum, information on prices at which the same item or similar items have previously been sold that is adequate for evaluating the reasonableness of the price of the modification. Such information may include--

(1) For catalog items, a copy of or identification of the catalog and its date, or the appropriate pages for the offered items, or a statement that the catalog is on file in the buying office to which the proposal is being submitted. Provide a copy or describe current discount policies and price lists (published or unpublished), e.g., wholesale, original equipment manufacturer, or reseller. Also explain the basis of each offered price and its relationship to the established catalog price, including how the proposed price relates to the price of recent sales in quantities similar to the proposed quantities.

(2) For market-priced items, the source and date or period of the market quotation or other basis for market price, the base amount, and applicable discounts. In addition, describe the nature of the market.

(3) For items included on an active Federal Supply Service Multiple Award Schedule contract, proof that an exception has been granted for the schedule item.

(2) The Contractor grants the Contracting Officer or an authorized representative the right to examine, at any time before award, books, records, documents, or other directly pertinent records to verify any request for an exception under this clause, and the reasonableness of price. For items priced using catalog or market prices, or law or regulation , access does not extend to cost or profit information or other data relevant solely to the Contractor's determination of the prices to be offered in the catalog or marketplace.

(b) Requirements for cost or pricing data. If the Contractor is not granted an exception from the requirement to submit cost or pricing data, the following applies:

(1) The Contractor shall submit cost or pricing data and supporting attachments in accordance with Table 15-2 of FAR 15.408.

As soon as practicable after agreement on price, but before award (except for unpriced actions), the Contractor shall submit a Certificate of Current Cost or Pricing Data, as prescribed by FAR 15.406-2.

(End of clause)

52.219-4 NOTICE OF PRICE EVALUATION PREFERENCE FOR HUBZONE SMALL BUSINESS CONCERNS (JAN 1999)

(a) Definition. HUBZone small business concern, as used in this clause, means a small business concern that appears on the List of Qualified HUBZone Small Business Concerns maintained by the Small Business Administration.

(b) Evaluation preference. (1) Offers will be evaluated by adding a factor of 10 percent to the price of all offers, except--

(i) Offers from HUBZone small business concerns that have not waived the evaluation preference;

(ii) Otherwise successful offers from small business concerns;

(iii) Otherwise successful offers of eligible products under the Trade Agreements Act when the dollar threshold for application of the Act is exceeded (see 25.402 of the Federal Acquisition Regulation (FAR)); and

(iv) Otherwise successful offers where application of the factor would be inconsistent with a Memorandum of Understanding or other international agreement with a foreign government.

(2) The factor of 10 percent shall be applied on a line item basis or to any group of items on which award may be made. Other evaluation factors described in the solicitation shall be applied before application of the factor.

(3) A concern that is both a HUBZone small business concern and a small disadvantaged business concern will receive the benefit of both the HUBZone small business price evaluation preference and the small disadvantaged business price evaluation adjustment (see FAR clause 52.219-23). Each applicable price evaluation preference or adjustment shall be calculated independently against an offeror's base offer.

These individual preference amounts shall be added together to arrive at the total evaluated price for that offer.

(c) Waiver of evaluation preference. A HUBZone small business concern may elect to waive the evaluation preference, in which case the factor will be added to its offer for evaluation purposes. The agreements in paragraph (d) of this clause do not apply if the offeror has waived the evaluation preference.

___ Offeror elects to waive the evaluation preference.

(d) Agreement. A HUBZone small business concern agrees that in the performance of the contract, in the case of a contract for

(1) Services (except construction), at least 50 percent of the cost of personnel for contract performance will be spent for employees of the concern or employees of other HUBZone small business concerns;

(2) Supplies (other than procurement from a nonmanufacturer of such supplies), at least 50 percent of the cost of manufacturing, excluding the cost of materials, will be performed by the concern or other HUBZone small business concerns;

(3) General construction, at least 15 percent of the cost of the contract performance incurred for personnel will be will be spent on the concern's employees or the employees of other HUBZone small business concerns; or

(4) Construction by special trade contractors, at least 25 percent of the cost of the contract performance incurred for personnel will be spent on the concern's employees or the employees of other HUBZone small business concerns.

(e) A HUBZone joint venture agrees that in the performance of the contract, the applicable percentage specified in paragraph (d) of this clause will be performed by the HUBZone small business participant or participants.

(f) A HUBZone small business concern nonmanufacturer agrees to furnish in performing this contract only end items manufactured or produced by HUBZone small business manufacturer concerns. This paragraph does not apply in connection with construction or service contracts.

(End of clause)

52.219-8 UTILIZATION OF SMALL BUSINESS CONCERNS (OCT 2000)

(a) It is the policy of the United States that small business concerns, veteran-owned small business concerns, service-disabled veteran-owned small business concerns, HUBZone small business concerns, small disadvantaged business concerns, and women-owned small business concerns shall have the maximum practicable opportunity to participate in performing contracts let by any Federal agency, including contracts and subcontracts for subsystems, assemblies, components, and related services for major systems. It is further the policy of the United States that its prime contractors establish procedures to ensure the timely payment of amounts due pursuant to the terms of their subcontracts with small business concerns, veteran-owned small business concerns, service-disabled veteran-owned

small business concerns, HUBZone small business concerns, small disadvantaged business concerns, and women-owned small business concerns.

(b) The Contractor hereby agrees to carry out this policy in the awarding of subcontracts to the fullest extent consistent with efficient contract performance. The Contractor further agrees to cooperate in any studies or surveys as may be conducted by the United States Small Business Administration or the awarding agency of the United States as may be necessary to determine the extent of the Contractor's compliance with this clause.

Definitions. As used in this contract--

HUBZone small business concern means a small business concern that appears on the List of Qualified HUBZone Small Business Concerns maintained by the Small Business Administration.

Service-disabled veteran-owned small business concern--

(1) Means a small business concern--

(i) Not less than 51 percent of which is owned by one or more service-disabled veterans or, in the case of any publicly owned business, not less than 51 percent of the stock of which is owned by one or more service-disabled veterans; and

(ii) The management and daily business operations of which are controlled by one or more service-disabled veterans or, in the case of a veteran with permanent and severe disability, the spouse or permanent caregiver of such veteran.

(2) Service-disabled veteran means a veteran, as defined in 38 U.S.C. 101(2), with a disability that is service-connected, as defined in 38 U.S.C. 101(16).

Small business concern means a small business as defined pursuant to Section 3 of the Small Business Act and relevant regulations promulgated pursuant thereto.

Small disadvantaged business concern means a small business concern that represents, as part of its offer that--

(1) It has received certification as a small disadvantaged business concern consistent with 13 CFR part 124, subpart B;

(2) No material change in disadvantaged ownership and control has occurred since its certification;

(3) Where the concern is owned by one or more individuals, the net worth of each individual upon whom the certification is based does not exceed $750,000 after taking into account the applicable exclusions set forth at 13 CFR 124.104(c)(2); and

(4) It is identified, on the date of its representation, as a certified small disadvantaged business in the database maintained by the Small Business Administration (PRO-Net).

Veteran-owned small business concern means a small business concern--

(1) Not less than 51 percent of which is owned by one or more veterans (as defined at 38 U.S.C. 101(2)) or, in the case of any publicly owned business, not less than 51 percent of the stock of which is owned by one or more veterans; and

(2) The management and daily business operations of which are controlled by one or more veterans.

Women-owned small business concern means a small business concern--

(1) That is at least 51 percent owned by one or more women, or, in the case of any publicly owned business, at least 51 percent of the stock of which is owned by one or more women; and

(2) Whose management and daily business operations are controlled by one or more women.

(d) Contractors acting in good faith may rely on written representations by their subcontractors regarding their status as a small business concern, a veteran-owned small business concern, a service-disabled veteran-owned small business concern, a HUBZone small business concern, a small disadvantaged business concern, or a women-owned small business concern.

(End of clause)

52.219-9 SMALL BUSINESS SUBCONTRACTING PLAN (JAN 2002)--ALTERNATE II (OCT 2001).

(a) This clause does not apply to small business concerns.

(b) Definitions. As used in this clause--

Commercial item means a product or service that satisfies the definition of commercial item in section 2.101 of the Federal Acquisition Regulation.

Commercial plan means a subcontracting plan (including goals) that covers the offeror's fiscal year and that applies to the entire production of commercial items sold by either the entire company or a portion thereof (e.g., division, plant, or product line).

Individual contract plan means a subcontracting plan that covers the entire contract period (including option periods), applies to a specific contract, and has goals that are based on the offeror's planned subcontracting in support of the specific contract, except that indirect costs incurred for common or joint purposes may be allocated on a prorated basis to the contract.

Master plan means a subcontracting plan that contains all the required elements of an individual contract plan, except goals, and may be incorporated into individual contract plans, provided the master plan has been approved.

Subcontract means any agreement (other than one involving an employer-employee relationship) entered into by a Federal Government prime Contractor or subcontractor calling for supplies or services required for performance of the contract or subcontract.

(c) Proposals submitted in response to this solicitation shall include a subcontracting plan that separately addresses subcontracting with small business, veteran-owner small business, HUBZone small business, small disadvantaged business, and women-owned small business concerns. If the offeror is submitting an individual contract plan, the plan must separately address subcontracting with small business, veteran-owner small business, HUBZone small business, small disadvantaged business, and women-owned small business concerns, with a separate part for the basic contract and separate parts for each option (if any). The plan shall be included in and made a part of the resultant contract. The subcontracting plan shall be negotiated within the time specified by the Contracting Officer. Failure to submit and negotiate a subcontracting plan shall make the offeror ineligible for award of a contract.

(d) The offeror's subcontracting plan shall include the following:

(1) Goals, expressed in terms of percentages of total planned subcontracting dollars, for the use of small business, veteran-owned small business, HUBZone small business, small disadvantaged business, and women-owned small business concerns as subcontractors. The offeror shall include all subcontracts that contribute to contract performance, and may include a proportionate share of products and services that are normally allocated as indirect costs.

(2) A statement of--

(i) Total dollars planned to be subcontracted for an individual contract plan; or the offeror's total projected sales, expressed in dollars, and the total value of projected subcontracts to support the sales for a commercial plan;

(ii) Total dollars planned to be subcontracted to small business concerns;

(iii) Total dollars planned to be subcontracted to veteran-owned small business concerns;

(iv) Total dollars planned to be subcontracted to HUBZone small business concerns;

(v) Total dollars planned to be subcontracted to small disadvantaged business concerns; and

(vi) Total dollars planned to be subcontracted to women-owned small business concerns.

(3) A description of the principal types of supplies and services to be subcontracted, and an identification of the types planned for subcontracting to--

(i) Small business concerns;

(ii) Veteran-owned small business concerns;

(iii) HUBZone small business concerns;

(iv) Small disadvantaged business concerns; and

(v) Women-owned small business concerns.

(4) A description of the method used to develop the subcontracting goals in paragraph (d)(1) of this clause.

(5) A description of the method used to identify potential sources for solicitation purposes (e.g., existing company source lists, the Procurement Marketing and Access Network (PRO-Net) of the Small Business Administration (SBA), veterans service organizations, the National Minority Purchasing Council Vendor Information Service, the Research and Information Division of the Minority Business Development Agency in the Department of Commerce, or small, HUBZone, small disadvantaged, and women-owned small business trade associations). A firm may rely on the information contained in PRO-Net as an accurate representation of a concern's size and ownership characteristics for the purposes of maintaining a small, veteran-owned small, HUBZone small, small disadvantaged, and women-owned small business source list. Use of PRO-Net as its source list does not relieve a firm of its responsibilities (e.g., outreach, assistance, counseling, or publicizing subcontracting opportunities) in this clause.

(6) A statement as to whether or not the offeror in included indirect costs in establishing subcontracting goals, and a description of the method used to determine the proportionate share of indirect costs to be incurred with—

(i) Small business concerns;

(ii) Veteran-owned small business concerns;

(iii) HUBZone small business concerns;

(iv) Small disadvantaged business concerns; and

(v) Women-owned small business concerns.

(7) The name of the individual employed by the offeror who will administer the offeror's subcontracting program, and a description of the duties of the individual.

(8) A description of the efforts the offeror will make to assure that small business, veteran-owned small business, HUBZone small business, small disadvantaged business and women-owned small business concerns have an equitable opportunity to compete for subcontracts.

(9) Assurances that the offeror will include the clause of this contract entitled ``Utilization of Small Business Concerns'' in all subcontracts that offer further subcontracting opportunities, and that the offeror will require all subcontractors (except small business concerns) that receive subcontracts in excess of $500,000 ($1,000,000 for construction of any public facility) to adopt a subcontracting plan that complies with the requirements of this clause.

(10) Assurances that the offeror will--

(i) Cooperate in any studies or surveys as may be required;

(ii) Submit periodic reports so that the Government can determine the extent of compliance by the offeror with the subcontracting plan;

(iii) Submit Standard Form (SF) 294, Subcontracting Report for Individual Contracts, and/or SF 295, Summary Subcontract Report, in accordance with paragraph (j) of this clause. The reports shall provide information on subcontract awards to small business concerns, veteran-owned small business concerns, service-disabled veteran-owned small business concerns, small disadvantaged business concerns, women-owned small business concerns, and Historically Black Colleges and Universities and Minority Institutions. Reporting shall be in accordance with the instructions on the forms or as provided in agency regulations.

(iv) Ensure that its subcontractors agree to submit SF 294 and SF 295.

(11) A description of the types of records that will be maintained concerning procedures that have been adopted to comply with the requirements and goals in the plan, including establishing source lists; and a description of the offeror's efforts to locate small business, veteran-owned small business, HUBZone small business, small disadvantaged business, and women-owned small business concerns and award subcontracts to them. The records shall include at least the following (on a plant-wide or company-wide basis, unless otherwise indicated)

(i) Source lists (e.g., PRO-Net), guides, and other data that identify small business, veteran-owner small business, HUBZone small business, small disadvantaged business, and women-owned small business concerns.

(ii) Organizations contacted in an attempt to locate sources that are small business, veteran-owned small business, HUBZone small business, small disadvantaged business, or women-owned small business concerns.

(iii) Records on each subcontract solicitation resulting in an award of more than $100,000, indicating--

(A) Whether small business concerns were solicited and, if not, why not;

(B) Whether veteran-owned small business concerns were solicited and, if not, why not;

(C) Whether HUBZone small business concerns were solicited and, if not, why not;

(D) Whether small disadvantaged business concerns were solicited and, if not, why not;

(E) Whether women-owned small business concerns were solicited and, if not, why not; and

(F) If applicable, the reason award was not made to a small business concern.

(iv) Records of any outreach efforts to contact--

(A) Trade associations;

(B) Business development organizations;

(C) Conferences and trade fairs to locate small, HUBZone small, small disadvantaged, and women-owned small business sources; and

(D) Veterans service organizations.

(v) Records of internal guidance and encouragement provided to buyers through--

(A) Workshops, seminars, training, etc.; and

(B) Monitoring performance to evaluate compliance with the program's requirements.

(vi) On a contract-by-contract basis, records to support award data submitted by the offeror to the Government, including the name, address, and business size of each subcontractor. Contractors having commercial plans need not comply with this requirement.

(e) In order to effectively implement this plan to the extent consistent with efficient contract performance, the Contractor shall perform the following functions:

(1) Assist small business, veteran-owner small business, HUBZone small business, small disadvantaged business, and women-owned small business concerns by arranging solicitations, time for the preparation of bids, quantities, specifications, and delivery schedules so as to facilitate the participation by such concerns. Where the Contractor's lists of potential small business, veteran-owner small business, HUBZone small business, small disadvantaged business, and women-owned small business subcontractors are excessively long, reasonable effort shall be made to give all such small business concerns an opportunity to compete over a period of time.

(2) Provide adequate and timely consideration of the potentialities of small business, veteran-owner small business, HUBZone small business, small disadvantaged business, and women-owned small business concerns in all ``make-or-buy'' decisions.

(3) Counsel and discuss subcontracting opportunities with representatives of small business, veteran-owner small business, HUBZone small business, small disadvantaged business, and women-owned small business firms.

(4) Provide notice to subcontractors concerning penalties and remedies for misrepresentations of business status as small, veteran-owner small business, HUBZone small, small disadvantaged, or women-owned small business for the purpose of obtaining a subcontract that is to be included as part or all of a goal contained in the Contractor's subcontracting plan.

(f) A master plan on a plant or division-wide basis that contains all the elements required by paragraph (d) of this clause, except goals, may be incorporated by reference as a part of the subcontracting plan required of the offeror by this clause; provided--
(1) the master plan has been approved, (2) the offeror ensures that the master plan is updated as necessary and provides copies of the approved master plan, including evidence of its approval, to the Contracting Officer, and (3) goals and any deviations from the master plan deemed necessary by the Contracting Officer to satisfy the requirements of this contract are set forth in the individual subcontracting plan.

(g) A commercial plan is the preferred type of subcontracting plan for contractors furnishing commercial items. The commercial plan shall relate to the offeror's planned subcontracting generally, for both commercial and Government business, rather than solely to the Government contract. Commercial plans are also preferred for subcontractors that

provide commercial items under a prime contract, whether or not the prime contractor is supplying a commercial item.

(h) Prior compliance of the offeror with other such subcontracting plans under previous contracts will be considered by the Contracting Officer in determining the responsibility of the offeror for award of the contract.

(i) The failure of the Contractor or subcontractor to comply in good faith with (1) the clause of this contract entitled "Utilization Of Small Business Concerns," or (2) an approved plan required by this clause, shall be a material breach of the contract.

(j) The Contractor shall submit the following reports:

(1) Standard Form 294, Subcontracting Report for Individual Contracts. This report shall be submitted to the Contracting Officer semiannually and at contract completion. The report covers subcontract award data related to this contract. This report is not required for commercial plans.

(2) Standard Form 295, Summary Subcontract Report. This report encompasses all of the contracts with the awarding agency. It must be submitted semi-annually for contracts with the Department of Defense and annually for contracts with civilian agencies. If the reporting activity is covered by a commercial plan, the reporting activity must report annually all subcontract awards under that plan. All reports submitted at the close of each fiscal year (both individual and commercial plans) shall include a breakout, in the Contractor's format, of subcontract awards, in whole dollars, to small disadvantaged business concerns by North American Industry Classification System (NAICS) Industry Subsector. For a commercial plan, the Contractor may obtain from each of its subcontractors a predominant NAICS Industry Subsector and report all awards to that subcontractor under its predominant NAICS Industry Subsector.

(End of clause)

52.219-16 LIQUIDATED DAMAGES-SUBCONTRACTING PLAN (JAN 1999)

(a) Failure to make a good faith effort to comply with the subcontracting plan, as used in this clause, means a willful or intentional failure to perform in accordance with the requirements of the subcontracting plan approved under the clause in this contract entitled "Small Business Subcontracting Plan," or willful or intentional action to frustrate the plan.

(b) Performance shall be measured by applying the percentage goals to the total actual subcontracting dollars or, if a commercial plan is involved, to the pro rata share of actual subcontracting dollars attributable to Government contracts covered by the commercial plan. If, at contract completion or, in the case of a commercial plan, at the close of the fiscal year for which the plan is applicable, the Contractor has failed to meet its subcontracting goals and the Contracting Officer decides in accordance with paragraph (c) of this clause that the Contractor failed to make a good faith effort to comply with its subcontracting plan, established in accordance with the clause in this contract entitled “Small Business Subcontracting Plan,” the Contractor shall pay the Government liquidated damages in an amount stated. The amount of probable damages attributable to the Contractor's failure to comply shall be an amount equal to the actual dollar amount by which the Contractor failed to achieve each subcontract goal.

(c) Before the Contracting Officer makes a final decision that the Contractor has failed to make such good faith effort, the Contracting Officer shall give the Contractor written notice specifying the failure and permitting the Contractor to demonstrate what good faith efforts have been made and to discuss the matter. Failure to respond to the notice may be taken as an admission that no valid explanation exists. If, after consideration of all the pertinent data, the Contracting Officer finds that the Contractor failed to make a good faith effort to comply with the subcontracting plan, the Contracting Officer shall issue a final decision to that effect and require that the Contractor pay the Government liquidated damages as provided in paragraph (b) of this clause.

(d) With respect to commercial plans, the Contracting Officer who approved the plan will perform the functions of the Contracting Officer under this clause on behalf of all agencies with contracts covered by the commercial plan.

(e) The Contractor shall have the right of appeal, under the clause in this contract entitled Disputes, from any final decision of the Contracting Officer.

(f) Liquidated damages shall be in addition to any other remedies that the Government may have.

(End of clause)

52.222-3 CONVICT LABOR (AUG 1996)

The Contractor agrees not to employ in the performance of this contract any person undergoing a sentence of imprisonment which has been imposed by any court of a State, the District of Columbia, the Commonwealth of Puerto Rico, the Virgin Islands, Guam, American Samoa, the Commonwealth of the Northern Mariana Islands, or the Trust Territory of the Pacific Islands. This limitation, however, shall not prohibit the employment by the Contractor in the performance of this contract of persons on parole or probation to work at paid employment during the term of their sentence or persons who have been pardoned or who have served their terms. Nor shall it prohibit the employment by the Contractor in the performance of this contract of persons confined for violation of the laws of any of the States, the District of Columbia, the Commonwealth of Puerto Rico, the Virgin Islands, Guam, American Samoa, the Commonwealth of the Northern Mariana Islands, or the Trust Territory of the Pacific Islands who are authorized to work at paid employment in the community under the laws of such jurisdiction, if--

(a)(1) The worker is paid or is in an approved work training program on a voluntary basis;

(2) Representatives of local union central bodies or similar labor union organizations have been consulted;

(3) Such paid employment will not result in the displacement of employed workers, or be applied in skills, crafts, or trades in which there is a surplus of available gainful labor in the locality, or impair existing contracts for services; and

(4) The rates of pay and other conditions of employment will not be less than those paid or provided for work of a similar nature in the locality in which the work is being performed; and

(b) The Attorney General of the United States has certified that the work-release laws or regulations of the jurisdiction involved are in conformity with the requirements of Executive Order 11755, as amended by Executive Orders 12608 and 12943.

(End of clause)

52.222-4 CONTRACT WORK HOURS AND SAFETY STANDARDS ACT - OVERTIME COMPENSATION. (SEP 2000)

(a) Overtime requirements. No Contractor or subcontractor employing laborers or mechanics (see Federal Acquisition Regulation 22.300) shall require or permit them to work over 40 hours in any workweek unless they are paid at least 1 and 1/2 times the basic rate of pay for each hour worked over 40 hours.

(b) Violation; liability for unpaid wages; liquidated damages. The responsible Contractor and subcontractor are liable for unpaid wages if they violate the terms in paragraph (a) of this clause. In addition, the Contractor and subcontractor are liable for liquidated damages payable to the Government. The Contracting Officer will assess liquidated damages at the rate of $10 per affected employee for each calendar day on which the employer required or

permitted the employee to work in excess of the standard workweek of 40 hours without paying overtime wages required by the Contract Work Hours and Safety Standards Act.

(c) Withholding for unpaid wages and liquidated damages. The Contracting Officer will withhold from payments due under the contract sufficient funds required to satisfy any Contractor or subcontractor liabilities for unpaid wages and liquidated damages. If amounts withheld under the contract are insufficient to satisfy Contractor or subcontractor liabilities, the Contracting Officer will withhold payments from other Federal or Federally assisted contracts held by the same Contractor that are subject to the Contract Work Hours and Safety Standards Act.

(d) Payrolls and basic records.

(1) The Contractor and its subcontractors shall maintain payrolls and basic payroll records for all laborers and mechanics working on the contract during the contract and shall make them available to the Government until 3 years after contract completion. The records shall contain the name and address of each employee, social security number, labor classifications, hourly rates of wages paid, daily and weekly number of hours worked, deductions made, and actual wages paid. The records need not duplicate those required for construction work by Department of Labor regulations at 29 CFR 5.5(a)(3) implementing the Davis-Bacon Act.

(2) The Contractor and its subcontractors shall allow authorized representatives of the Contracting Officer or the Department of Labor to inspect, copy, or transcribe records maintained under paragraph (d)(1) of this clause. The Contractor or subcontractor also shall allow authorized representatives of the Contracting Officer or Department of Labor to interview employees in the workplace during working hours.

(e) Subcontracts. The Contractor shall insert the provisions set forth in paragraphs (a) through (d) of this clause in subcontracts exceeding $100,000 and require subcontractors to include these provisions in any lower tier subcontracts. The Contractor shall be responsible for compliance by any subcontractor or lower-tier subcontractor with the provisions set forth in paragraphs (a) through (d) of this clause.

(End of clause)

52.222-6 DAVIS-BACON ACT (FEB 1995)

(a) All laborers and mechanics employed or working upon the site of the work will be paid unconditionally and not less often than once a week, and without subsequent deduction or rebate on any account (except such payroll deductions as are permitted by regulations issued by the Secretary of Labor under the Copeland Act (29 CFR Part 3), the full amount of wages and bona fide fringe benefits (or cash equivalents thereof) due at time of payment computed at rates not less than those contained in the wage determination of the Secretary of Labor which is attached hereto and made a part hereof, regardless of any contractual relationship which may be alleged to exist between the Contractor and such laborers and mechanics. Contributions made or costs reasonably anticipated for bona fide fringe benefits under section 1(b)(2) of the Davis-Bacon Act on behalf of laborers or mechanics are considered wages paid to such laborers or mechanics, subject to the provisions of paragraph (d) of this clause; also, regular contributions made or costs incurred for more than a weekly period (but not less often than quarterly) under plans, funds, or programs which cover the particular weekly period, are deemed to be constructively made or incurred during such period. Such laborers and mechanics shall be paid not less than the appropriate wage rate and fringe benefits in the wage determination for the classification of work actually performed, without regard to skill, except as provided in the clause entitled Apprentices and Trainees. Laborers or mechanics performing work in more than one classification may be compensated at the rate specified for each classification for the time actually worked therein; provided, That the employer's payroll records accurately set forth the time spent in each classification in which work is performed. The wage determination (including any additional classifications and wage rates conformed under paragraph (b) of this clause) and the Davis-Bacon poster (WH-1321) shall be posted at all times by the Contractor and its subcontractors at the site of the work in a prominent and accessible place where it can be easily seen by the workers.

(b)(1) The Contracting Officer shall require that any class of laborers or mechanics which is not listed in the wage determination and which is to be employed under the contract shall be classified in conformance with the wage determination. The Contracting Officer shall approve an additional classification and wage rate and fringe benefits therefor only when all the following criteria have been met:

(i) The work to be performed by the classification requested is not performed by a classification in the wage determination.

(ii) The classification is utilized in the area by the construction industry.

(iii) The proposed wage rate, including any bona fide fringe benefits, bears a reasonable relationship to the wage rates contained in the wage determination.

(2) If the Contractor and the laborers and mechanics to be employed in the classification (if known), or their representatives, and the Contracting Officer agree on the classification and wage rate (including the amount designated for fringe benefits, where appropriate), a report of the action taken shall be sent by the Contracting Officer to the Administrator of the Wage and Hour Division, Employment Standards Administration, U.S. Department of Labor, Washington, DC 20210. The Administrator or an authorized representative will approve, modify, or disapprove every additional classification action within 30 days of receipt and so advise the Contracting Officer or will notify the Contracting Officer within the 30-day period that additional time is necessary.

(3) In the event the Contractor, the laborers or mechanics to be employed in the classification, or their representatives, and the Contracting Officer do not agree on the proposed classification and wage rate (including the amount designated for fringe benefits, where appropriate), the Contracting Officer shall refer the questions, including the views of all interested parties and the recommendation of the Contracting Officer, to the Administrator of the Wage and Hour Division for determination. The Administrator, or an authorized representative, will issue a determination within 30 days of receipt and so advise the Contracting Officer or will notify the Contracting Officer within the 30-day period that additional time is necessary.

(4) The wage rate (including fringe benefits, where appropriate) determined pursuant to subparagraphs (b)(2) and (b)(3) of this clause shall be paid to all workers performing work in the classification under this contract from the first day on which work is performed in the classification.

(c) Whenever the minimum wage rate prescribed in the contract for a class of laborers or mechanics includes a fringe benefit which is not expressed as an hourly rate, the Contractor shall either pay the benefit as stated in the wage determination or shall pay another bona fide fringe benefit or an hourly cash equivalent thereof.

(viii) If the Contractor does not make payments to a trustee or other third person, the Contractor may consider as part of the wages of any laborer or mechanic the amount of any costs reasonably anticipated in providing bona fide fringe benefits under a plan or program; provided, That the Secretary of Labor has found, upon the written request of the Contractor, that the applicable standards of the Davis-Bacon Act have been met. The Secretary of Labor may require the Contractor to set aside in a separate account assets for the meeting of obligations under the plan or program.

(End of clause)

52.222-7 WITHHOLDING OF FUNDS (FEB 1988)

The Contracting Officer shall, upon his or her own action or upon written request of an authorized representative of the Department of Labor, withhold or cause to be withheld from the Contractor under this contract or any other Federal contract with the same Prime Contractor, or any other Federally assisted contract subject to Davis-Bacon prevailing wage requirements, which is held by the same Prime Contractor, so much of the accrued payments or

advances as may be considered necessary to pay laborers and mechanics, including apprentices, trainees, and helpers, employed by the Contractor or any subcontractor the full amount of wages required by the contract. In the event of failure to pay any laborer or mechanic, including any apprentice, trainee, or helper, employed or working on the site of the work, all or part of the wages required by the contract, the Contracting Officer may, after written notice to the Contractor, take such action as may be necessary to cause the suspension of any further payment, advance, or guarantee of funds until such violations have ceased.

(End of clause)

52.222-8 PAYROLLS AND BASIC RECORDS (FEB 1988)

(a) Payrolls and basic records relating thereto shall be maintained by the Contractor during the course of the work and preserved for a period of 3 years thereafter for all laborers and mechanics working at the site of the work. Such records shall contain the name, address, and social security number of each such worker, his or her correct classification, hourly rates of wages paid (including rates of contributions or costs anticipated for bona fide fringe benefits or cash equivalents thereof of the types described in section 1(b)(2)(B) of the Davis-Bacon Act), daily and weekly number of hours worked, deductions made, and actual wages paid. Whenever the Secretary of Labor has found, under paragraph (d) of the clause entitled Davis-Bacon Act, that the wages of any laborer or mechanic include the amount of any costs reasonably anticipated in providing benefits under a plan or program described in section 1(b)(2)(B) of the Davis-Bacon Act, the Contractor shall maintain records which show that the commitment to provide such benefits is enforceable, that the plan or program is financially responsible, and that the plan or program has been communicated in writing to the laborers or mechanics affected, and records which show the costs anticipated or the actual cost incurred in providing such benefits. Contractors employing apprentices or trainees under approved programs shall maintain written evidence of the registration of apprenticeship programs and certification of trainee programs, the registration of the apprentices and trainees, and the ratios and wage rates prescribed in the applicable programs.

(b)(1) The Contractor shall submit weekly for each week in which any contract work is performed a copy of all payrolls to the Contracting Officer. The payrolls submitted shall set out accurately and completely all of the information required to be maintained under paragraph (a) of this clause. This information may be submitted in any form desired. Optional Form WH-347 (Federal Stock Number 029-005-00014-1) is available for this purpose and may be purchased from the Superintendent of Documents, U.S. Government Printing Office, Washington, DC 20402. The Prime Contractor is responsible for the submission of copies of payrolls by all subcontractors.

(2) Each payroll submitted shall be accompanied by a "Statement of Compliance," signed by the Contractor or subcontractor or his or her agent who pays or supervises the payment of the persons employed under the contract and shall certify--

(i) That the payroll for the payroll period contains the information required to be maintained under paragraph (a) of this clause and that such information is correct and complete;

(ii) That each laborer or mechanic (including each helper, apprentice, and trainee) employed on the contract during the payroll period has been paid the full weekly wages earned, without rebate, either directly or indirectly, and that no deductions have been made either directly or indirectly from the full wages earned, other than permissible deductions as set forth in the Regulations, 29 CFR Part 3; and

(iii) That each laborer or mechanic has been paid not less than the applicable wage rates and fringe benefits or cash equivalents for the classification of work performed, as specified in the applicable wage determination incorporated into the contract.

(3) The weekly submission of a properly executed certification set forth on the reverse side of Optional Form WH-347 shall satisfy the requirement for submission of the "Statement of Compliance" required by subparagraph (b)(2) of this clause.

(4) The falsification of any of the certifications in this clause may subject the Contractor or subcontractor to civil or criminal prosecution under Section 1001 of Title 18 and Section 3729 of Title 31 of the United States Code.

(c) The Contractor or subcontractor shall make the records required under paragraph (a) of this clause available for inspection, copying, or transcription by the Contracting Officer or authorized representatives of the Contracting Officer or the Department of Labor. The Contractor or subcontractor shall permit the Contracting Officer or representatives of the Contracting Officer or the Department of Labor to interview employees during working hours on the job. If the Contractor or subcontractor fails to submit required records or to make them available, the Contracting Officer may, after written notice to the Contractor, take such action as may be necessary to cause the suspension of any further payment. Furthermore, failure to submit the required records upon request or to make such records available may be grounds for debarment action pursuant to 29 CFR 5.12.

(End of clause)

52.222-9 APPRENTICES AND TRAINEES (FEB 1988)

(a) Apprentices. Apprentices will be permitted to work at less than the predetermined rate for the work they performed when they are employed pursuant to and individually registered in a bona fide apprenticeship program registered with the U.S. Department of Labor, Employment and Training Administration, Bureau of Apprenticeship and Training, or with a State Apprenticeship Agency recognized by the Bureau, or if a person is employed in his or her first 90 days of probationary employment as an apprentice in such an apprenticeship program, who is not individually registered in the program, but who has been certified by the Bureau of Apprenticeship and Training or a State Apprenticeship Agency (where appropriate) to be eligible for probationary employment as an apprentice. The allowable ratio of apprentices to journeymen on the job site in any craft classification shall not be greater than the ratio permitted to the Contractor as to the entire work force under the registered program. Any worker listed on a payroll at an apprentice wage rate, who is not registered or otherwise employed as stated in this paragraph, shall be paid not less than the applicable wage determination for the classification of work actually performed. In addition, any apprentice performing work on the job site in excess of the ratio permitted under the registered program shall be paid not less than the applicable wage rate on the wage determination for the work actually performed. Where a contractor is performing construction on a project in a locality other than that in which its program is registered, the ratios and wage rates (expressed in percentages of the journeyman's hourly rate) specified in the Contractor's or subcontractor's registered program shall be observed. Every apprentice must be paid at not less than the rate specified in the registered program for the apprentice's level of progress, expressed as a percentage of the journeyman hourly rate specified in the applicable wage determination. Apprentices shall be paid fringe benefits in accordance with the provisions of the apprenticeship program. If the apprenticeship program does not specify fringe benefits, apprentices must be paid the full amount of fringe benefits listed on the wage determination for the applicable classification. If the Administrator determines that a different practice prevails for the applicable apprentice classification, fringes shall be paid in accordance with that determination. In the event the Bureau of Apprenticeship and Training, or a State Apprenticeship Agency recognized by the Bureau, withdraws approval of an apprenticeship program, the Contractor will no longer be permitted to utilize apprentices at less than the applicable predetermined rate for the work performed until an acceptable program is approved.

(b) Trainees. Except as provided in 29 CFR 5.16, trainees will not be permitted to work at less than the predetermined rate for the work performed unless they are employed pursuant to and individually registered in a program which has received prior approval, evidenced by formal certification by the U.S. Department of Labor, Employment and Training Administration. The ratio of trainees to journeymen on the job site shall not be greater than permitted under the plan approved by the Employment and Training Administration. Every trainee must be paid at not less than the rate specified in the approved program for the trainee's level of progress, expressed as a percentage of the journeyman hourly rate specified in the applicable wage determination. Trainees shall be paid fringe benefits in accordance with the provisions of the trainee program. If the trainee program does not mention fringe benefits, trainees shall be paid the full amount of fringe benefits listed in the wage determination unless the Administrator of the Wage and Hour Division determines that there is an apprenticeship program associated with the

corresponding journeyman wage rate in the wage determination which provides for less than full fringe benefits for apprentices. Any employee listed on the payroll at a trainee rate who is not registered and participating in a training plan approved by the Employment and Training Administration shall be paid not less than the applicable wage rate in the wage determination for the classification of work actually performed. In addition, any trainee performing work on the job site in excess of the ratio permitted under the registered program shall be paid not less than the applicable wage rate in the wage determination for the work actually performed. In the event the Employment and Training Administration withdraws approval of a training program, the Contractor will no longer be permitted to utilize trainees at less than the applicable predetermined rate for the work performed until an acceptable program is approved.

(c) Equal employment opportunity. The utilization of apprentices, trainees, and journeymen under this clause shall be in conformity with the equal employment opportunity requirements of Executive Order 11246, as amended, and 29 CFR Part 30.

(End of clause)

52.222-10 COMPLIANCE WITH COPELAND ACT REQUIREMENTS (FEB 1988)

The Contractor shall comply with the requirements of 29 CFR Part 3, which are hereby incorporated by reference in this contract.

(End of clause)

52.222-11 SUBCONTRACTS (LABOR STANDARDS (FEB 1988)

(a) The Contractor or subcontractor shall insert in any subcontracts the clauses entitled Davis-Bacon Act, Contract Work Hours and Safety Standards Act-Overtime Compensation, Apprentices and Trainees, Payrolls and Basic Records, Compliance with Copeland Act Requirements, Withholding of Funds, Subcontracts (Labor Standards), Contract Termination-Debarment, Disputes Concerning Labor Standards, Compliance with Davis-Bacon and Related Act Regulations, and Certification of Eligibility, and such other clauses as the Contracting Officer may, by appropriate instructions, require, and also a clause requiring subcontractors to include these clauses in any lower tier subcontracts. The Prime Contractor shall be responsible for compliance by any subcontractor or lower tier subcontractor with all the contract clauses cited in this paragraph.

(b)(1) Within 14 days after award of the contract, the Contractor shall deliver to the Contracting Officer a completed Statement and Acknowledgment Form (SF 1413) for each subcontract, including the subcontractor's signed and dated acknowledgment that the clauses set forth in paragraph (a) of this clause have been included in the subcontract.

(2) Within 14 days after the award of any subsequently awarded subcontract the Contractor shall deliver to the Contracting Officer an updated completed SF 1413 for such additional subcontract.

(End of clause)

52.222-12 CONTRACT TERMINATION--DEBARMENT (FEB 1988)

A breach of the contract clauses entitled Davis-Bacon Act, Contract Work Hours and Safety Standards Act--Overtime Compensation, Apprentices and Trainees, Payrolls and Basic Records, Compliance with Copeland Act Requirements, Subcontracts (Labor Standards), Compliance with Davis-Bacon and Related Act Regulations, or Certification of Eligibility may be grounds for termination of the contract, and for debarment as a Contractor and subcontractor as provided in 29 CFR 5.12.

(End of clause)

52.222-13 COMPLIANCE WITH DAVIS-BACON AND RELATED ACT REGULATIONS (FEB 1988)

All rulings and interpretations of the Davis-Bacon and Related Acts contained in 29 CFR Parts 1, 3, and 5 are hereby incorporated by reference in this contract.

(End of clause)

52.222-14 DISPUTES CONCERNING LABOR STANDARDS (FEB 1988)

The United States Department of Labor has set forth in 29 CFR Parts 5, 6, and 7 procedures for resolving disputes concerning labor standards requirements. Such disputes shall be resolved in accordance with those procedures and not the Disputes clause of this contract. Disputes within the meaning of this clause include disputes between the Contractor (or any of its subcontractors) and the contracting agency, the U.S. Department of Labor, or the employees or their representatives.

(End of clause)

52.222-15 CERTIFICATION OF ELIGIBILITY (FEB 1988)

(a) By entering into this contract, the Contractor certifies that neither it (nor he or she) nor any person or firm who has an interest in the Contractor's firm is a person or firm ineligible to be awarded Government contracts by virtue of section 3(a) of the Davis-Bacon Act or 29 CFR 5.12(a)(1).

(b) No part of this contract shall be subcontracted to any person or firm ineligible for award of a Government contract by virtue of section 3(a) of the Davis-Bacon Act or 29 CFR 5.12(a)(1).

(c) The penalty for making false statements is prescribed in the U.S. Criminal Code, 18 U.S.C. 1001.

(End of clause)

52.222-21 PROHIBITION OF SEGREGATED FACILITIES (FEB 1999)

(a) Segregated facilities, as used in this clause, means any waiting rooms, work areas, rest rooms and wash rooms, restaurants and other eating areas, time clocks, locker rooms and other storage or dressing areas, parking lots, drinking fountains, recreation or entertainment areas, transportation, and housing facilities provided for employees, that are segregated by explicit directive or are in fact segregated on the basis of race, color, religion, sex, or national origin because of written or oral policies or employee custom. The term does not include separate or single-user rest rooms or necessary dressing or sleeping areas provided to assure privacy between the sexes.

(b) The Contractor agrees that it does not and will not maintain or provide for its employees any segregated facilities at any of its establishments, and that it does not and will not permit its employees to perform their services at any location under its control where segregated facilities are maintained. The Contractor agrees that a breach of this clause is a violation of the Equal Opportunity clause in this contract.

(c) The Contractor shall include this clause in every subcontract and purchase order that is subject to the Equal Opportunity clause of this contract.

(End of clause)

52.222-26 EQUAL OPPORTUNITY (APR 2002)

(a) Definition. United States, as used in this clause, means the 50 States, the District of Columbia, Puerto Rico, the Northern Mariana Islands, American Samoa, Guam, the U.S. Virgin Islands, and Wake Island.

(b) If, during any 12-month period (including the 12 months preceding the award of this contract), the Contractor has been or is awarded nonexempt Federal contracts and/or subcontracts that have an aggregate value in excess of $10,000, the Contractor shall comply with paragraphs (b)(1) through (b)(11) of this clause, except for work performed outside the United States by employees who were not recruited within the United States. Upon request, the Contractor shall provide information necessary to determine the applicability of this clause.

(1) The Contractor shall not discriminate against any employee or applicant for employment because of race, color, religion, sex, or national origin. However, it shall not be a violation of this clause for the Contractor to extend a publicly announced preference in employment to Indians living on or near an Indian reservation, in connection with employment opportunities on or near an Indian reservation, as permitted by 41 CFR 60-1.5.

(2) The Contractor shall take affirmative action to ensure that applicants are employed, and that employees are treated during employment, without regard to their race, color, religion, sex, or national origin. This shall include, but not be limited to, (i) employment, (ii) upgrading, (iii) demotion, (iv) transfer, (v) recruitment or recruitment advertising, (vi) layoff or termination, (vii) rates of pay or other forms of compensation, and (viii) selection for training, including apprenticeship.

(3) The Contractor shall post in conspicuous places available to employees and applicants for employment the notices to be provided by the Contracting Officer that explain this clause.

(4) The Contractor shall, in all solicitations or advertisements for employees placed by or on behalf of the Contractor, state that all qualified applicants will receive consideration for employment without regard to race, color, religion, sex, or national origin.

(5) The Contractor shall send, to each labor union or representative of workers with which it has a collective bargaining agreement or other contract or understanding, the notice to be provided by the Contracting Officer advising the labor union or workers' representative of the Contractor's commitments under this clause, and post copies of the notice in conspicuous places available to employees and applicants for employment.

(6) The Contractor shall comply with Executive Order 11246, as amended, and the rules, regulations, and orders of the Secretary of Labor.

(7) The Contractor shall furnish to the contracting agency all information required by Executive Order 11246, as amended, and by the rules, regulations, and orders of the Secretary of Labor. The Contractor shall also file Standard Form 100 (EEO-1), or any successor form, as prescribed in 41 CFR part 60-1. Unless the Contractor has filed within the 12 months preceding the date of contract award, the Contractor shall, within 30 days after contract award, apply to either the regional Office of Federal Contract Compliance Programs (OFCCP) or the local office of the Equal Employment Opportunity Commission for the necessary forms.

(8) The Contractor shall permit access to its premises, during normal business hours, by the contracting agency or the OFCCP for the purpose of conducting on-site compliance evaluations and complaint investigations. The Contractor shall permit the Government to inspect and copy any books, accounts, records (including computerized records), and other material that may be relevant to the matter under investigation and pertinent to compliance with Executive Order 11246, as amended, and rules and regulations that implement the Executive Order.

(9) If the OFCCP determines that the Contractor is not in compliance with this clause or any rule, regulation, or

order of the Secretary of Labor, this contract may be canceled, terminated, or suspended in whole or in part and the Contractor may be declared ineligible for further Government contracts, under the procedures authorized in Executive Order 11246, as amended. In addition, sanctions may be imposed and remedies invoked against the Contractor as provided in Executive Order 11246, as amended; in the rules, regulations, and orders of the Secretary of Labor; or as otherwise provided by law.

(10) The Contractor shall include the terms and conditions of subparagraphs (b)(1) through (11) of this clause in every subcontract or purchase order that is not exempted by the rules, regulations, or orders of the Secretary of Labor issued under Executive Order 11246, as amended, so that these terms and conditions will be binding upon each subcontractor or vendor.

(11) The Contractor shall take such action with respect to any subcontract or purchase order as the contracting officer may direct as a means of enforcing these terms and conditions, including sanctions for noncompliance; provided, that if the Contractor becomes involved in, or is threatened with, litigation with a subcontractor or vendor as a result of any direction, the Contractor may request the United States to enter into the litigation to protect the interests of the United States.

(c) Notwithstanding any other clause in this contract, disputes relative to this clause will be governed by the procedures in 41 CFR 60-1.1.

(End of clause)

52.222-27 AFFIRMATIVE ACTION COMPLIANCE REQUIREMENTS FOR CONSTRUCTION (FEB 1999)

(a) Definitions. "Covered area," as used in this clause, means the geographical area described in the solicitation for this contract.

"Deputy Assistant Secretary," as used in this clause, means Deputy Assistant Secretary for Federal Contract Compliance, U.S. Department of Labor, or a designee.

"Employer's identification number," as used in this clause, means the Federal Social Security number used on the employer's quarterly federal tax return, U.S. Treasury Department Form 941.

"Minority," as used in this clause, means--

(1) American Indian or Alaskan Native (all persons having origins in any of the original peoples of North America and maintaining identifiable tribal affiliations through membership and participation or community identification).

(2) Asian and Pacific Islander (all persons having origins in any of the original peoples of the Far East, Southeast Asia, the Indian Subcontinent, or the Pacific Islands);

(3) Black (all persons having origins in any of the black African racial groups not of Hispanic origin); and

(4) Hispanic (all persons of Mexican, Puerto Rican, Cuban, Central or South American, or other Spanish culture or origin, regardless of race).

(b) If the Contractor, or a subcontractor at any tier, subcontracts a portion of the work involving any construction trade, each such subcontract in excess of $10,000 shall include this clause and the Notice containing the goals for minority and female participation stated in the solicitation for this contract.

(c) If the Contractor is participating in a Hometown Plan (41 CFR 60-4) approved by the U.S. Department of Labor in a covered area, either individually or through an association, its affirmative action obligations on all work in the plan area (including goals) shall comply with the plan for those trades that have unions participating in the plan.

Contractors must be able to demonstrate participation in, and compliance with, the provisions of the plan. Each Contractor or subcontractor participating in an approved plan is also required to comply with its obligations under the Equal Opportunity clause, and to make a good faith effort to achieve each goal under the plan in each trade in which it has employees. The overall good-faith performance by other Contractors or subcontractors toward a goal in an approved plan does not excuse any Contractor's or subcontractor's failure to make good-faith efforts to achieve the plan's goals.

(d) The Contractor shall implement the affirmative action procedures in subparagraphs (g)(1) through (16) of this clause. The goals stated in the solicitation for this contract are expressed as percentages of the total hours of employment and training of minority and female utilization that the Contractor should reasonably be able to achieve in each construction trade in which it has employees in the covered area. If the Contractor performs construction work in a geographical area located outside of the covered area, it shall apply the goals established for the geographical area where that work is actually performed. The Contractor is expected to make substantially uniform progress toward its goals in each craft.

(e) Neither the terms and conditions of any collective bargaining agreement, nor the failure by a union with which the Contractor has a collective bargaining agreement, to refer minorities or women shall excuse the Contractor's obligations under this clause, Executive Order 11246, as amended, or the regulations thereunder.

(f) In order for the nonworking training hours of apprentices and trainees to be counted in meeting the goals, apprentices and trainees must be employed by the Contractor during the training period, and the Contractor must have made a commitment to employ the apprentices and trainees at the completion of their training, subject to the availability of employment opportunities. Trainees must be trained pursuant to training programs approved by the U.S. Department of Labor.

(g) The Contractor shall take affirmative action to ensure equal employment opportunity. The evaluation of the Contractor's compliance with this clause shall be based upon its effort to achieve maximum results from its actions. The Contractor shall document these efforts fully and implement affirmative action steps at least as extensive as the following:

(1) Ensure a working environment free of harassment, intimidation, and coercion at all sites and in all facilities where the Contractor's employees are assigned to work. The Contractor, if possible, will assign two or more women to each construction project. The Contractor shall ensure that foremen, superintendents, and other onsite supervisory personnel are aware of and carry out the Contractor's obligation to maintain such a working environment, with specific attention to minority or female individuals working at these sites or facilities.

(2) Establish and maintain a current list of sources for minority and female recruitment. Provide written notification to minority and female recruitment sources and community organizations when the Contractor or its unions have employment opportunities available, and maintain a record of the organizations' responses.

(3) Establish and maintain a current file of the names, addresses, and telephone numbers of each minority and female off-the-street applicant, referrals of minorities or females from unions, recruitment sources, or community organizations, and the action taken with respect to each individual. If an individual was sent to the union hiring hall for referral and not referred back to the Contractor by the union or, if referred back, not employed by the Contractor, this shall be documented in the file, along with whatever additional actions the Contractor may have taken.

(4) Immediately notify the Deputy Assistant Secretary when the union or unions with which the Contractor has a collective bargaining agreement has not referred back to the Contractor a minority or woman sent by the Contractor, or when the Contractor has other information that the union referral process has impeded the Contractor's efforts to meet its obligations.

(5) Develop on-the-job training opportunities and/or participate in training programs for the area that expressly include minorities and women, including upgrading programs and apprenticeship and trainee programs relevant to

the Contractor's employment needs, especially those programs funded or approved by the Department of Labor. The Contractor shall provide notice of these programs to the sources compiled under subparagraph (g)(2) of this clause.

(6) Disseminate the Contractor's equal employment policy by--

(i) Providing notice of the policy to unions and to training, recruitment, and outreach programs, and requesting their cooperation in assisting the Contractor in meeting its contract obligations;

(ii) Including the policy in any policy manual and in collective bargaining agreements;

(iii) Publicizing the policy in the company newspaper, annual report, etc.;

(iv) Reviewing the policy with all management personnel and with all minority and female employees at least once a year; and

(v) Posting the policy on bulletin boards accessible to employees at each location where construction work is performed.

(7) Review, at least annually, the Contractor's equal employment policy and affirmative action obligations with all employees having responsibility for hiring, assignment, layoff, termination, or other employment decisions. Conduct review of this policy with all on-site supervisory personnel before initiating construction work at a job site. A written record shall be made and maintained identifying the time and place of these meetings, persons attending, subject matter discussed, and disposition of the subject matter.

(8) Disseminate the Contractor's equal employment policy externally by including it in any advertising in the news media, specifically including minority and female news media. Provide written notification to, and discuss this policy with, other Contractors and subcontractors with which the Contractor does or anticipates doing business.

(9) Direct recruitment efforts, both oral and written, to minority, female, and community organizations, to schools with minority and female students, and to minority and female recruitment and training organizations serving the Contractor's recruitment area and employment needs. Not later than 1 month before the date for acceptance of applications for apprenticeship or training by any recruitment source, send written notification to organizations such as the above, describing the openings, screening procedures, and tests to be used in the selection process.

(10) Encourage present minority and female employees to recruit minority persons and women. Where reasonable, provide after-school, summer, and vacation employment to minority and female youth both on the site and in other areas of the Contractor's workforce.

(11) Validate all tests and other selection requirements where required under 41 CFR 60-3.

(12) Conduct, at least annually, an inventory and evaluation at least of all minority and female personnel for promotional opportunities. Encourage these employees to seek or to prepare for, through appropriate training, etc., opportunities for promotion.

(13) Ensure that seniority practices, job classifications, work assignments, and other personnel practices do not have a discriminatory effect by continually monitoring all personnel and employment-related activities to ensure that the Contractor's obligations under this contract are being carried out.

(14) Ensure that all facilities and company activities are nonsegregated except that separate or single-user rest rooms and necessary dressing or sleeping areas shall be provided to assure privacy between the sexes.

(15) Maintain a record of solicitations for subcontracts for minority and female construction contractors and suppliers, including circulation of solicitations to minority and female contractor associations and other business associations.

(16) Conduct a review, at least annually, of all supervisors' adherence to and performance under the Contractor's equal employment policy and affirmative action obligations.

(h) The Contractor is encouraged to participate in voluntary associations that may assist in fulfilling one or more of the affirmative action obligations contained in subparagraphs (g)(1) through (16) of this clause. The efforts of a contractor association, joint contractor-union, contractor-community, or similar group of which the contractor is a member and participant may be asserted as fulfilling one or more of its obligations under subparagraphs (g)(1) through (16) of this clause, provided the Contractor--

(1) Actively participates in the group;

(2) Makes every effort to ensure that the group has a positive impact on the employment of minorities and women in the industry;

(3) Ensures that concrete benefits of the program are reflected in the Contractor's minority and female workforce participation;

(4) Makes a good-faith effort to meet its individual goals and timetables; and

(5) Can provide access to documentation that demonstrates the effectiveness of actions taken on behalf of the Contractor. The obligation to comply is the Contractor's, and failure of such a group to fulfill an obligation shall not be a defense for the Contractor's noncompliance.

(i) A single goal for minorities and a separate single goal for women shall be established. The Contractor is required to provide equal employment opportunity and to take affirmative action for all minority groups, both male and female, and all women, both minority and nonminority. Consequently, the Contractor may be in violation of Executive Order 11246, as amended, if a particular group is employed in a substantially disparate manner.

(j) The Contractor shall not use goals or affirmative action standards to discriminate against any person because of race, color, religion, sex, or national origin.

(k) The Contractor shall not enter into any subcontract with any person or firm debarred from Government contracts under Executive Order 11246, as amended.

(l) The Contractor shall carry out such sanctions and penalties for violation of this clause and of the Equal Opportunity clause, including suspension, termination, and cancellation of existing subcontracts, as may be imposed or ordered under Executive Order 11246, as amended, and its implementing regulations, by the OFCCP. Any failure to carry out these sanctions and penalties as ordered shall be a violation of this clause and Executive Order 11246, as amended.

(m) The Contractor in fulfilling its obligations under this clause shall implement affirmative action procedures at least as extensive as those prescribed in paragraph (g) of this clause, so as to achieve maximum results from its efforts to ensure equal employment opportunity. If the Contractor fails to comply with the requirements of Executive Order 11246, as amended, the implementing regulations, or this clause, the Deputy Assistant Secretary shall take action as prescribed in 41 CFR 60-4.8.

(n) The Contractor shall designate a responsible official to--

(1) Monitor all employment-related activity to ensure that the Contractor's equal employment policy is being carried out;

(2) Submit reports as may be required by the Government; and

(3) Keep records that shall at least include for each employee the name, address, telephone number, construction trade, union affiliation (if any), employee identification number, social security number, race, sex, status (e.g., mechanic, apprentice, trainee, helper, or laborer), dates of changes in status, hours worked per week in the indicated trade, rate of pay, and locations at which the work was performed. Records shall be maintained in an easily understandable and retrievable form; however, to the degree that existing records satisfy this requirement, separate records are not required to be maintained.

Nothing contained herein shall be construed as a limitation upon the application of other laws that establish different standards of compliance or upon the requirements for the hiring of local or other area residents (e.g., those under the Public Works Employment Act of 1977 and the Community Development Block Grant Program).

(End of clause)

52.222-35 AFFIRMATIVE ACTION FOR DISABLED VETERANS AND VETERANS OF THE VIETNAM ERA (APR 1998)

(a)) Definitions. As used in this clause--

All employment openings includes all positions except executive and top management, those positions that will be filled from within the contractor's organization, and positions lasting 3 days or less. This term includes full-time employment, temporary employment of more than 3 days' duration, and part-time employment.

Appropriate office of the State employment service system means the local office of the Federal-State national system of public employment offices with assigned responsibility to serve the area where the employment opening is to be filled, including the District of Columbia, Guam, the Commonwealth of Puerto Rico, and the Virgin Islands.

Positions that will be filled from within the Contractor's organization means employment openings for which no consideration will be given to persons outside the Contractor's organization (including any affiliates, subsidiaries, and parent companies) and includes any openings that the Contractor proposes to fill from regularly established “recall” lists. The exception does not apply to a particular opening once an employer decides to consider applicants outside of its organization.

Veteran of the Vietnam era means a person who--

(1) Served on active duty for a period of more than 180 days, any part of which occurred between August 5, 1964, and May 7, 1975, and was discharged or released therefrom with other than a dishonorable discharge; or

(2) Was discharged or released from active duty for a service-connected disability if any part of such active duty was performed between August 5, 1964, and May 7, 1975.

(b) General. (1) Regarding any position for which the employee or applicant for employment is qualified, the Contractor shall not discriminate against the individual because the individual is a disabled veteran or a veteran of the Vietnam era. The Contractor agrees to take affirmative action to employ, advance in employment, and otherwise treat qualified disabled veterans and veterans of the Vietnam era without discrimination based upon their disability or veterans' status in all employment practices such as--

(i) Employment;

(ii) Upgrading;

(iii) Demotion or transfer;

(iv) Recruitment;

(v) Advertising;

(vi) Layoff or termination;

(vii) Rates of pay or other forms of compensation; and

(viii) Selection for training, including apprenticeship.

(2) The Contractor agrees to comply with the rules, regulations, and relevant orders of the Secretary of Labor (Secretary) issued under the Vietnam Era Veterans' Readjustment Assistance Act of 1972 (the Act), as amended.

(c) Listing openings. (1) The Contractor agrees to list all employment openings existing at contract award or occurring during contract performance, at an appropriate office of the State employment service system in the locality where the opening occurs. These openings include those occurring at any Contractor facility, including one not connected with performing this contract. An independent corporate affiliate is exempt from this requirement.

(2) State and local government agencies holding Federal contracts of $10,000 or more shall also list all their employment openings with the appropriate office of the State employment service.

(3) The listing of employment openings with the State employment service system is required at least concurrently with using any other recruitment source or effort and involves the obligations of placing a bona fide job order, including accepting referrals of veterans and nonveterans. This listing does not require hiring any particular job applicant or hiring from any particular group of job applicants and is not intended to relieve the Contractor from any requirements of Executive orders or regulations concerning nondiscrimination in employment.

(4) Whenever the Contractor becomes contractually bound to the listing terms of this clause, it shall advise the State employment service system, in each State where it has establishments, of the name and location of each hiring location in the State. As long as the Contractor is contractually bound to these terms and has so advised the State system, it need not advise the State system of subsequent contracts. The Contractor may advise the State system when it is no longer bound by this contract clause.

(d) Applicability. This clause does not apply to the listing of employment openings that occur and are filled outside the 50 States, the District of Columbia, the Commonwealth of Puerto Rico, Guam, and the Virgin Islands.

(e) Postings. (1) The Contractor agrees to post employment notices stating (i) the Contractor's obligation under the law to take affirmative action to employ and advance in employment qualified disabled veterans and veterans of the Vietnam era, and (ii) the rights of applicants and employees.

(2) These notices shall be posted in conspicuous places that are available to employees and applicants for employment. They shall be in a form prescribed by the Deputy Assistant Secretary for Federal Contract Compliance Programs, Department of Labor (Deputy Assistant Secretary), and provided by or through the Contracting Officer.

(3) The Contractor shall notify each labor union or representative of workers with which it has a collective bargaining agreement or other contract understanding, that the Contractor is bound by the terms of the Act, and is committed to take affirmative action to employ, and advance in employment, qualified disabled veterans and veterans of the Vietnam Era.

(f) Noncompliance. If the Contractor does not comply with the requirements of this clause, appropriate actions may be taken under the rules, regulations, and relevant orders of the Secretary issued pursuant to the Act.

(g) Subcontracts. The Contractor shall include the terms of this clause in every subcontract or purchase order of $10,000 or more unless exempted by rules, regulations, or orders of the Secretary. The Contractor shall act as specified by the Deputy Assistant Secretary to enforce the terms, including action for noncompliance.

(End of clause)

52.222-36 AFFIRMATIVE ACTION FOR WORKERS WITH DISABILITIES (JUN 1998)

(a) General. (1) Regarding any position for which the employee or applicant for employment is qualified, the Contractor shall not discriminate against any employee or applicant because of physical or mental disability. The Contractor agrees to take affirmative action to employ, advance in employment, and otherwise treat qualified individuals with disabilities without discrimination based upon their physical or mental disability in all employment practices such as--

(i) Recruitment, advertising, and job application procedures;

(ii) Hiring, upgrading, promotion, award of tenure, demotion, transfer, layoff, termination, right of return from layoff, and rehiring;

(iii) Rates of pay or any other form of compensation and changes in compensation;

(iv) Job assignments, job classifications, organizational structures, position descriptions, lines of progression, and seniority lists;

(v) Leaves of absence, sick leave, or any other leave;

(vi) Fringe benefits available by virtue of employment, whether or not administered by the Contractor;

(vii) Selection and financial support for training, including apprenticeships, professional meetings, conferences, and other related activities, and selection for leaves of absence to pursue training;

(viii) Activities sponsored by the Contractor, including social or recreational programs; and

(ix) Any other term, condition, or privilege of employment.

(2) The Contractor agrees to comply with the rules, regulations, and relevant orders of the Secretary of Labor (Secretary) issued under the Rehabilitation Act of 1973 (29 U.S.C. 793) (the Act), as amended.

(b) Postings. (1) The Contractor agrees to post employment notices stating--

(i) The Contractor's obligation under the law to take affirmative action to employ and advance in employment qualified individuals with disabilities; and

(ii) The rights of applicants and employees.

(2) These notices shall be posted in conspicuous places that are available to employees and applicants for employment. The Contractor shall ensure that applicants and employees with disabilities are informed of the contents of the notice (e.g., the Contractor may have the notice read to a visually disabled individual, or may lower the posted notice so that it might be read by a person in a wheelchair). The notices shall be in a form prescribed by the Deputy Assistant Secretary for Federal Contract Compliance of the U.S. Department of Labor (Deputy Assistant Secretary) and shall be provided by or through the Contracting Officer.

(3) The Contractor shall notify each labor union or representative of workers with which it has a collective bargaining agreement or other contract understanding, that the Contractor is bound by the terms of Section 503 of the Act and is committed to take affirmative action to employ, and advance in employment, qualified individuals with physical or mental disabilities.

(c) Noncompliance. If the Contractor does not comply with the requirements of this clause, appropriate actions may be taken under the rules, regulations, and relevant orders of the Secretary issued pursuant to the Act.

(d) Subcontracts. The Contractor shall include the terms of this clause in every subcontract or purchase order in excess of $10,000 unless exempted by rules, regulations, or orders of the Secretary. The Contractor shall act as specified by the Deputy Assistant Secretary to enforce the terms, including action for noncompliance.

(End of clause)

52.222-37 EMPLOYMENT REPORTS ON DISABLED VETERANS AND VETERANS OF THE VIETNAM ERA (JAN 1999)

(a) Unless the Contractor is a State or local government agency, the Contractor shall report at least annually, as required by the Secretary of Labor, on--

(1) The number of disabled veterans and the number of veterans of the Vietnam era in the workforce of the contractor by job category and hiring location; and

(2) The total number of new employees hired during the period covered by the report, and of that total, the number of disabled veterans, and the number of veterans of the Vietnam era.

(b) The above items shall be reported by completing the form entitled "Federal Contractor Veterans' Employment Report VETS-100."

(c) Reports shall be submitted no later than September 30 of each year beginning September 30, 1988.

(d) The employment activity report required by paragraph (a)(2) of this clause shall reflect total hires during the most recent 12-month period as of the ending date selected for the employment profile report required by paragraph (a)(1) of this clause. Contractors may select an ending date: (1) As of the end of any pay period during the period January through March 1st of the year the report is due, or (2) as of December 31, if the contractor has previous written approval from the Equal Employment Opportunity Commission to do so for purposes of submitting the Employer Information Report EEO-1 (Standard Form 100).

(e) The count of veterans reported according to paragraph (a) of this clause shall be based on voluntary disclosure. Each Contractor subject to the reporting requirements at 38 U.S.C. 4212 shall invite all disabled veterans and veterans of the Vietnam era who wish to benefit under the affirmative action program at 38 U.S.C. 4212 to identify themselves to the Contractor. The invitation shall state that the information is voluntarily provided; that the information will be kept confidential; that disclosure or refusal to provide the information will not subject the applicant or employee to any adverse treatment; and that the information will be used only in accordance with the regulations promulgated under 38 U.S.C. 4212.

(f) Subcontracts. The Contractor shall include the terms of this clause in every subcontract or purchase order of $10,000 or more unless exempted by rules, regulations, or orders of the Secretary.

(End of clause)

52.222-41 SERVICE CONTRACT ACT OF 1965, AS AMENDED (MAY 1989)

(a) Definitions. "Act," as used in this clause, means the Service Contract Act of 1965, as amended (41 U.S.C. 351, et seq.).

"Contractor," as used in this clause or in any subcontract, shall be deemed to refer to the subcontractor, except in the term "Government Prime Contractor."

"Service employee," as used in this clause, means any person engaged in the performance of this contract other than any person employed in a bona fide executive, administrative, or professional capacity, as these terms are defined in Part 541 of Title 29, Code of Federal Regulations, as revised. It includes all such persons regardless of any contractual relationship that may be alleged to exist between a Contractor or subcontractor and such persons.

(b) Applicability. This contract is subject to the following provisions and to all other applicable provisions of the Act and regulations of the Secretary of Labor (29 CFR Part 4). This clause does not apply to contracts or subcontracts administratively exempted by the Secretary of Labor or exempted by 41 U.S.C. 356, as interpreted in Subpart C of 29 CFR Part 4.

(c) Compensation. (1) Each service employee employed in the performance of this contract by the Contractor or any subcontractor shall be paid not less than the minimum monetary wages and shall be furnished fringe benefits in accordance with the wages and fringe benefits determined by the Secretary of Labor, or authorized representative, as specified in any wage determination attached to this contract.

(2)(i) If a wage determination is attached to this con- tract, the Contractor shall classify any class of service employee which is not listed therein and which is to be employed under the contract (i.e., the work to be performed is not performed by any classification listed in the wage determination) so as to provide a reasonable relationship (i.e., appropriate level of skill comparison) between such unlisted classifications and the classifications listed in the wage determination. Such conformed class of employees shall be paid the monetary wages and furnished the fringe benefits as are determined pursuant to the procedures in this paragraph (c).

(ii) This conforming procedure shall be initiated by the Contractor prior to the performance of contract work by the unlisted class of employee. The Contractor shall submit Standard Form (SF) 1444, Request For Authorization of Additional Classification and Rate, to the Contracting Officer no later than 30 days after the unlisted class of employee performs any contract work. The Contracting Officer shall review the proposed classification and rate and promptly submit the completed SF 1444 (which must include information regarding the agreement or disagreement of the employees' authorized representatives or the employees themselves together with the agency recommendation), and all pertinent informa-tion to the Wage and Hour Division, Employment Standards Administration, U.S. Department of Labor. The Wage and Hour Division will approve, modify, or disapprove the action or render a final determination in the event of disagreement within 30 days of receipt or will notify the Contracting Officer within 30 days of receipt that additional time is necessary.

(iii) The final determination of the conformance action by the Wage and Hour Division shall be transmitted to the Contracting Officer who shall promptly notify the Contractor of the action taken. Each affected employee shall be furnished by the Contractor with a written copy of such determination or it shall be posted as a part of the wage determination.

(iv)(A) The process of establishing wage and fringe benefit rates that bear a reasonable relationship to those listed in a wage determination cannot be reduced to any single formula. The approach used may vary from wage determination to wage determination depending on the circumstances. Standard wage and salary administration practices which rank various job classifications by pay grade pursuant to point schemes or other job factors may, for example, be relied upon. Guidance may also be obtained from the way different jobs are rated under Federal pay systems (Federal Wage Board Pay System and the General Schedule) or from other wage determina- tions issued in the same locality. Basic to the establishment of any conformable wage rate(s) is the concept that a pay relationship should be maintained between job classifications based on the skill required and the duties performed.

(B) In the case of a contract modification, an exercise of an option, or extension of an existing contract, or in any other case where a Contractor succeeds a contract under which the classification in question was previously conformed pursuant to paragraph (c) of this clause, a new conformed wage rate and fringe benefits may be assigned to the conformed classification by indexing (i.e., adjusting) the previous conformed rate and fringe benefits by an

amount equal to the average (mean) percentage increase (or decrease, where appropriate) between the wages and fringe benefits specified for all classifications to be used on the contract which are listed in the current wage determination, and those specified for the corresponding classifications in the previously applicable wage determination. Where conforming actions are accomplished in accordance with this paragraph prior to the performance of contract work by the unlisted class of employees, the Contractor shall advise the Contracting Officer of the action taken but the other procedures in subdivision (c)(2)(ii) of this clause need not be followed.

(C) No employee engaged in performing work on this contract shall in any event be paid less than the currently applicable minimum wage specified under section 6(a)(1) of the Fair Labor Standards Act of 1938, as amended.

(v) The wage rate and fringe benefits finally determined under this subparagraph (c)(2) of this clause shall be paid to all employees performing in the classification from the first day on which contract work is performed by them in the classification. Failure to pay the unlisted employees the compensation agreed upon by the interested parties and/or finally determined by the Wage and Hour Division retroactive to the date such class of employees commenced contract work shall be a violation of the Act and this contract.

(vi) Upon discovery of failure to comply with subparagraph (c)(2) of this clause, the Wage and Hour Division shall make a final determination of conformed classification, wage rate, and/or fringe benefits which shall be retroactive to the date such class or classes of employees commenced contract work.

(3) Adjustment of Compensation. If the term of this contract is more than 1 year, the minimum monetary wages and fringe benefits required to be paid or fur- nished thereunder to service employees under this contract shall be subject to adjustment after 1 year and not less often than once every 2 years, under wage determinations issued by the Wage and Hour Division.

(d) Obligation to Furnish Fringe Benefits. The Contractor or subcontractor may discharge the obligation to furnish fringe benefits specified in the attachment or determined under subparagraph (c)(2) of this clause by furnishing equivalent combinations of bona fide fringe benefits, or by making equivalent or differential cash payments, only in accordance with Subpart D of 29 CFR Part 4.

(e) Minimum Wage. In the absence of a minimum wage attachment for this contract, neither the Contractor nor any subcontractor under this contract shall pay any person performing work under this contract (regardless of whether the person is a service employee) less than the minimum wage specified by section 6(a)(1) of the Fair Labor Standards Act of 1938. Nothing in this clause shall relieve the Contractor or any subcontractor of any other obligation under law or contract for payment of a higher wage to any employee.

(f) Successor Contracts. If this contract succeeds a contract subject to the Act under which substantially the same services were furnished in the same locality and service employees were paid wages and fringe benefits provided for in a collective bargaining agreement, in the absence of the minimum wage attachment for this contract setting forth such collectively bargained wage rates and fringe benefits, neither the Contractor nor any subcontractor under this contract shall pay any service employee performing any of the contract work (regardless of whether or not such employee was employed under the predecessor contract), less than the wages and fringe benefits provided for in such collective bargaining agreement, to which such employee would have been entitled if employed under the predecessor contract, including accrued wages and fringe benefits and any prospective increases in wages and fringe benefits provided for under such agreement. No Contractor or subcontractor under this contract may be relieved of the foregoing obligation unless the limitations of 29 CFR 4.1b(b) apply or unless the Secretary of Labor or the Secretary's authorized representative finds, after a hearing as provided in 29 CFR 4.10 that the wages and/or fringe benefits provided for in such agreement are substantially at variance with those which prevail for services of a character similar in the locality, or determines, as provided in 29 CFR 4.11, that the collective bargaining agreement applicable to service employees employed under the predecessor contract was not entered into as a result of arm's length negotiations. Where it is found in accordance with the review procedures provided in 29 CFR 4.10 and/or 4.11 and Parts 6 and 8 that some or all of the wages and/or fringe benefits contained in a predecessor Contractor's collective bargaining agreement are substantially at variance with those which prevail for services of a character similar in the locality, and/or that the collective bargaining agreement applicable to service employees employed

under the predecessor contract was not entered into as a result of arm's length negotiations, the Department will issue a new or revised wage determination setting forth the applicable wage rates and fringe benefits. Such determination shall be made part of the contract or subcontract, in accordance with the decision of the Administrator, the Administrative Law Judge, or the Board of Service Contract Appeals, as the case may be, irrespective of whether such issuance occurs prior to or after the award of a contract or subcontract (53 Comp. Gen. 401 (1973)). In the case of a wage determination issued solely as a result of a finding of substantial variance, such determination shall be effective as of the date of the final administrative decision.

(g) Notification to Employees. The Contractor and any subcontractor under this contract shall notify each service employee commencing work on this contract of the minimum monetary wage and any fringe benefits required to be paid pursuant to this contract, or shall post the wage determination attached to this contract. The poster provided by the Department of Labor (Publication WH 1313) shall be posted in a prominent and accessible place at the worksite. Failure to comply with this requirement is a violation of section 2(a)(4) of the Act and of this contract.

(h) Safe and Sanitary Working Conditions. The Contractor or subcontractor shall not permit any part of the services called for by this contract to be performed in buildings or surroundings or under working conditions provided by or under the control or supervision of the Contractor or subcontractor which are unsanitary, hazardous, or dangerous to the health or safety of the service employees. The Contractor or subcontractor shall comply with the safety and health standards applied under 29 CFR Part 1925.

(i) Records. (1) The Contractor and each subcontractor performing work subject to the Act shall make and maintain for 3 years from the completion of the work, and make them available for inspection and transcription by authorized representatives of the Wage and Hour Division, Employment Standards Administration, a record of the following:

(i) For each employee subject to the Act--

(A) Name and address and social security number;

(B) Correct work classification or classifications, rate or rates of monetary wages paid and fringe benefits provided, rate or rates of payments in lieu of fringe benefits, and total daily and weekly compensation;

(C) Daily and weekly hours worked by each employee; and

(D) Any deductions, rebates, or refunds from the total daily or weekly compensation of each employee.

(ii) For those classes of service employees not included in any wage determination attached to this contract, wage rates or fringe benefits determined by the interested parties or by the Administrator or authorized representative under the terms of paragraph (c) of this clause. A copy of the report required by subdivision (c)(2)(ii) of this clause will fulfill this requirement.

(iii) Any list of the predecessor Contractor's employees which had been furnished to the Contractor as prescribed by paragraph (n) of this clause.

(2) The Contractor shall also make available a copy of this contract for inspection or transcription by authorized representatives of the Wage and Hour Division.

(3) Failure to make and maintain or to make available these records for inspection and transcription shall be a violation of the regulations and this contract, and in the case of failure to produce these records, the Contracting Officer, upon direction of the Department of Labor and notification to the Contractor, shall take action to cause suspension of any further payment or advance of funds until the violation ceases.

(4) The Contractor shall permit authorized representatives of the Wage and Hour Division to conduct interviews with employees at the worksite during normal working hours.

(j) Pay Periods. The Contractor shall unconditionally pay to each employee subject to the Act all wages due free and clear and without subsequent deduction (except as otherwise provided by law or regulations, 29 CFR Part 4), rebate, or kickback on any account. These payments shall be made no later than one pay period following the end of the regular pay period in which the wages were earned or accrued. A pay period under this Act may not be of any duration longer than semi-monthly.

(k) Withholding of Payments and Termination of Contract. The Contracting Officer shall withhold or cause to be withheld from the Government Prime Contractor under this or any other Government contract with the Prime Contractor such sums as an appropriate official of the Department of Labor requests or such sums as the Contracting Officer decides may be necessary to pay underpaid employees employed by the Contractor or subcontractor. In the event of failure to pay any employees subject to the Act all or part of the wages or fringe benefits due under the Act, the Contracting Officer may, after authorization or by direction of the Department of Labor and written notification to the Contractor, take action to cause suspension of any further payment or advance of funds until such violations have ceased. Additionally, any failure to comply with the requirements of this clause may be grounds for termination of the right to proceed with the contract work. In such event, the Government may enter into other contracts or arrangements for completion of the work, charging the Contractor in default with any additional cost.

(l) Subcontracts. The Contractor agrees to insert this clause in all subcontracts subject to the Act.

(m) Collective Bargaining Agreements Applicable to Service Employees. If wages to be paid or fringe benefits to be furnished any service employees employed by the Government Prime Contractor or any subcontractor under the contract are provided for in a collective bargaining agreement which is or will be effective during any period in which the contract is being performed, the Government Prime Contractor shall report such fact to the Contracting Officer, together with full information as to the application and accrual of such wages and fringe benefits, including any prospective increases, to service employees engaged in work on the contract, and a copy of the collective bargaining agreement. Such report shall be made upon commencing performance of the contract, in the case of collective bargaining agreements effective at such time, and in the case of such agreements or provisions or amendments thereof effective at a later time during the period of contract performance such agreements shall be reported promptly after negotiation thereof.

(n) Seniority List. Not less than 10 days prior to completion of any contract being performed at a Federal facility where service employees may be retained in the performance of the succeeding contract and subject to a wage determination which contains vacation or other benefit provisions based upon length of service with a Contractor (predecessor) or successor (29 CFR 4.173), the incumbent Prime Contractor shall furnish the Contracting Officer a certified list of the names of all service employees on the Contractor's or subcontractor's payroll during the last month of contract performance. Such list shall also contain anniversary dates of employment on the contract either with the current or predecessor Contractors of each such service employee. The Contracting Officer shall turn over such list to the successor Contractor at the commencement of the succeeding contract.

(o) Rulings and Interpretations. Rulings and interpretations of the Act are contained in Regulations, 29 CFR Part 4.

(p) Contractor's Certification. (1) By entering into this contract, the Contractor (and officials thereof) certifies that neither it (nor he or she) nor any person or firm who has a substantial interest in the Contractor's firm is a person or firm ineligible to be awarded Government contracts by virtue of the sanctions imposed under section 5 of the Act.

(2) No part of this contract shall be subcontracted to any person or firm ineligible for award of a Government contract under section 5 of the Act.

(3) The penalty for making false statements is prescribed in the U.S. Criminal Code, 18 U.S.C. 1001.

(q) Variations, Tolerances, and Exemptions Involving Employment. Notwithstanding any of the provisions in paragraphs (b) through (o) of this clause, the following employees may be employed in accordance with the following variations, tolerances, and exemptions, which the Secretary of Labor, pursuant to section 4(b) of the Act prior to its amendment by Pub. L. 92-473, found to be necessary and proper in the public interest or to avoid serious

impairment of the conduct of Government business:

(1) Apprentices, student-learners, and workers whose earning capacity is impaired by age, physical or mental deficiency, or injury may be employed at wages lower than the minimum wages otherwise required by section 2(a)(1) or 2(b)(1) of the Act without diminishing any fringe benefits or cash payments in lieu thereof required under section 2(a)(2) of the Act, in accordance with the conditions and procedures prescribed for the employment of apprentices, student-learners, handicapped persons, and handicapped clients of sheltered workshops under section 14 of the Fair Labor Standards Act of 1938, in the regulations issued by the Administrator (29 CFR Parts 520, 521, 524, and 525).

(2) The Administrator will issue certificates under the Act for the employment of apprentices, student-learners, handicapped persons, or handicapped clients of sheltered workshops not subject to the Fair Labor Standards Act of 1938, or subject to different minimum rates of pay under the two acts, authorizing appropriate rates of minimum wages (but without changing requirements concerning fringe benefits or supplementary cash payments in lieu thereof), applying procedures prescribed by the applicable regulations issued under the Fair Labor Standards Act of 1938 (29 CFR Parts 520, 521, 524, and 525).

(3) The Administrator will also withdraw, annul, or cancel such certificates in accordance with the regulations in 29 CFR Parts 525 and 528.

(r) Apprentices. Apprentices will be permitted to work at less than the predetermined rate for the work they perform when they are employed and individually registered in a bona fide apprenticeship program registered with a State Apprenticeship Agency which is recognized by the U.S. Department of Labor, or if no such recognized agency exists in a State, under a program registered with the Bureau of Apprenticeship and Training, Employment and Training Administration, U.S. Department of Labor. Any employee who is not registered as an apprentice in an approved program shall be paid the wage rate and fringe benefits contained in the applicable wage determination for the journeyman classification of work actually performed. The wage rates paid apprentices shall not be less than the wage rate for their level of progress set forth in the registered program, expressed as the appropriate percentage of the journeyman's rate contained in the applicable wage determination. The allowable ratio of apprentices to journeymen employed on the contract work in any craft classification shall not be greater than the ratio permitted to the Contractor as to his entire work force under the registered program.

(s) Tips. An employee engaged in an occupation in which the employee customarily and regularly receives more than $30 a month in tips may have the amount of these tips credited by the employer against the minimum wage required by section 2(a)(1) or section 2(b)(1) of the Act, in accordance with section 3(m) of the Fair Labor Standards Act and Regulations, 29 CFR Part 531. However, the amount of credit shall not exceed $1.34 per hour beginning January 1, 1981. To use this provision--

(1) The employer must inform tipped employees about this tip credit allowance before the credit is utilized;

(2) The employees must be allowed to retain all tips (individually or through a pooling arrangement and regardless of whether the employer elects to take a credit for tips received);

(3) The employer must be able to show by records that the employee receives at least the applicable Service Contract Act minimum wage through the combination of direct wages and tip credit; and

(4) The use of such tip credit must have been permitted under any predecessor collective bargaining agreement applicable by virtue of section 4(c) of the Act.

Disputes Concerning Labor Standards. The U.S. Department of Labor has set forth in 29 CFR Parts 4, 6, and 8 procedures for resolving disputes concerning labor standards requirements. Such disputes shall be resolved in accordance with those procedures and not the Disputes clause of this contract. Disputes within the meaning of this clause include disputes between the Contractor (or any of its subcontractors) and the contracting agency, the U.S. Department of Labor, or the employees or their representatives.

(End of clause)

52.222-42 STATEMENT OF EQUIVALENT RATES FOR FEDERAL HIRES (MAY 1989)

In compliance with the Service Contract Act of 1965, as amended, and the regulations of the Secretary of Labor (29 CFR Part 4), this clause identifies the classes of service employees expected to be employed under the contract and states the wages and fringe benefits payable to each if they were employed by the contracting agency subject to the provisions of 5 U.S.C. 5341 or 5332.

THIS STATEMENT IS FOR INFORMATION ONLY: IT IS NOT A WAGE DETERMINATION

Employee Class	Monetary Wage-Fringe Benefits
General Clerk IV	$ 9.58
Secretary V	$15.97
Civil Engineer Technician	$14.83
Engineering Technician I	$11.86

(End of clause)

52.222-44 FAIR LABOR STANDARDS ACT AND SERVICE CONTRACT ACT--PRICE ADJUSTMENT (FEB 2002)

(a) This clause applies to both contracts subject to area prevailing wage determinations and contracts subject to Contractor collective bargaining agreements.

(b) The Contractor warrants that the prices in this contract do not include any allowance for any contingency to cover increased costs for which adjustment is provided under this clause.

(c) The contract price or contract unit price labor rates will be adjusted to reflect increases or decreases by the Contractor in wages and fringe benefits to the extent that these increases or decreases are made to comply with--

(1) An increased or decreased wage determination applied to this contract by operation of law; or

(2) An amendment to the Fair Labor Standards Act of 1938 that is enacted subsequent to award of this contract, affects the minimum wage, and becomes applicable to this contract under law.

(d) Any such adjustment will be limited to increases or decreases in wages and fringe benefits as described in paragraph (c) of this clause, and to the accompanying increases or decreases in social security and unemployment taxes and workers' compensation insurance; it shall not otherwise include any amount for general and administrative costs, overhead, or profit.

(e) The Contractor shall notify the Contracting Officer of any increase claimed under this clause within 30 days after the effective date of the wage change, unless this period is extended by the Contracting Officer in writing. The Contractor shall promptly notify the Contracting Officer of any decrease under this clause, but nothing in the clause shall preclude the Government from asserting a claim within the period permitted by law. The notice shall contain a statement of the amount claimed and any relevant supporting data that the Contracting Officer may reasonably require. Upon agreement of the parties, the contract price or contract unit price labor rates shall be modified in writing. The Contractor shall continue performance pending agreement on or determination of any such adjustment and its effective date.

(f) The Contracting Officer or an authorized representative shall, until the expiration of 3 years after final payment under the contract, have access to and the right to examine any directly pertinent books, documents, papers, and records of the Contractor.

(End of clause)

52.223-5 POLLUTION PREVENTION AND RIGHT-TO-KNOW INFORMATION (APR 1998)

(a) Executive Order 12856 of August 3, 1993, requires Federal facilities to comply with the provisions of the Emergency Planning and Community Right-to-Know Act of 1986 (EPCRA)(42 U.S.C. 11001-11050) and the Pollution Prevention Act of 1990 (PPA)(42 U.S.C. 13101-13109).

(b) The Contractor shall provide all information needed by the Federal facility to comply with the emergency planning reporting requirements of Section 302 of EPCRA; the emergency notice requirements of Section 304 of EPCRA; the list of Material Safety Data Sheets required by Section 311 of EPCRA; the emergency and hazardous chemical inventory forms of Section 312 of EPCRA; the toxic chemical release inventory of Section 313 of EPCRA, which includes the reduction and recycling information required by Section 6607 of PPA; and the toxic chemical reduction goals requirements of Section 3-302 of Executive Order 12856.

(End of clause)

52.223-6 DRUG-FREE WORKPLACE (MAY 2001)

(a) Definitions. As used in this clause --

"Controlled substance" means a controlled substance in schedules I through V of section 202 of the Controlled Substances Act (21 U.S.C. 812) and as further defined in regulation at 21 CFR 1308.11 - 1308.15.

"Conviction" means a finding of guilt (including a plea of nolo contendere) or imposition of sentence, or both, by any judicial body charged with the responsibility to deter- mine violations of the Federal or State criminal drug statutes.

"Criminal drug statute" means a Federal or non-Federal criminal statute involving the manufacture, distribution, dispensing, possession, or use of any controlled substance.

"Drug-free workplace" means the site(s) for the performance of work done by the Contractor in connection with a specific contract at which employees of the Contractor are prohibited from engaging in the unlawful manufacture, distribution, dispensing, possession, or use of a controlled substance.

"Employee" means an employee of a Contractor directly engaged in the performance of work under a Government contract. "Directly engaged" is defined to include all direct cost employees and any other Contractor employee who has other than a minimal impact or involvement in contract performance.

"Individual" means an offeror/contractor that has no more than one employee including the offeror/contractor.

(b) The Contractor, if other than an individual, shall-- within 30 days after award (unless a longer period is agreed to in writing for contracts of 30 days or more performance duration), or as soon as possible for contracts of less than 30 days performance duration--

(1) Publish a statement notifying its employees that the unlawful manufacture, distribution, dispensing, possession, or use of a controlled substance is prohibited in the Contractor's workplace and specifying the actions that will be taken against employees for violations of such prohibition;

(2) Establish an ongoing drug-free awareness program to inform such employees about--

(i) The dangers of drug abuse in the workplace;

(ii) The Contractor's policy of maintaining a drug-free workplace;

(iii) Any available drug counseling, rehabilitation, and employee assistance programs; and

(iv) The penalties that may be imposed upon employees for drug abuse violations occurring in the workplace;

(3) Provide all employees engaged in performance of the contract with a copy of the statement required by subparagraph (b)(1) of this clause;

(4) Notify such employees in writing in the statement required by subparagraph (b)(1) of this clause that, as a condition of continued employment on this contract, the employee will--

(i) Abide by the terms of the statement; and

(ii) Notify the employer in writing of the employee's conviction under a criminal drug statute for a violation occurring in the workplace no later than 5 days after such conviction.

(5) Notify the Contracting Officer in writing within 10 days after receiving notice under subdivision (b)(4)(ii) of this clause, from an employee or otherwise receiving actual notice of such conviction. The notice shall include the position title of the employee;

(6) Within 30 days after receiving notice under subdivision (b)(4)(ii) of this clause of a conviction, take one of the following actions with respect to any employee who is convicted of a drug abuse violation occurring in the workplace:

(i) Taking appropriate personnel action against such employee, up to and including termination; or

(ii) Require such employee to satisfactorily participate in a drug abuse assistance or rehabilitation program approved for such purposes by a Federal, State, or local health, law enforcement, or other appropriate agency; and

(7) Make a good faith effort to maintain a drug-free workplace through implementation of subparagraphs (b)(1) though (b)(6) of this clause.

(c) The Contractor, if an individual, agrees by award of the contract or acceptance of a purchase order, not to engage in the unlawful manufacture, distribution, dispensing, possession, or use of a controlled substance while performing this contract.

(d) In addition to other remedies available to the Government, the Contractor's failure to comply with the requirements of paragraph (b) or (c) of this clause may, pursuant to FAR 23.506, render the Contractor subject to suspension of contract payments, termination of the contract for default, and suspension or debarment.

(End of clause)

52.223-14 TOXIC CHEMICAL RELEASE REPORTING (OCT 2000)

(a) Unless otherwise exempt, the Contractor, as owner or operator of a facility used in the performance of this contract, shall file by July 1 for the prior calendar year an annual Toxic Chemical Release Inventory Form (Form R) as described in sections 313(a) and (g) of the Emergency Planning and Community Right-to-Know Act of 1986

(EPCRA) (42 U.S.C. 11023(a) and (g)), and section 6607 of the Pollution Prevention Act of 1990 (PPA) (42 U.S.C. 13106). The Contractor shall file, for each facility subject to the Form R filing and reporting requirements, the annual Form R throughout the life of the contract.

(b) A Contractor owned or operated facility used in the performance of this contract is exempt from the requirement to file an annual Form R if--

(1) The facility does not manufacture, process, or otherwise use any toxic chemicals listed under section 313(c) of EPCRA, 42 U.S.C. 11023(c);

(2) The facility does not have 10 or more full-time employees as specified in section 313(b)(1)(A) of EPCRA, 42 U.S.C. 11023(b)(1)(A);

(3) The facility does not meet the reporting thresholds of toxic chemicals established under of EPCRA, 42 U.S.C. 11023(f) (including the alternate thresholds at 40 CFR 372.27, provided an appropriate certification form has been filed with EPA);

(4) The facility does not fall within Standard Industrial Classification Code (SIC) major groups 20 through 39 or their corresponding North American Industry Classification System (NAICS) sectors 31 through 33; or

(5) The facility is not located within any State of the United States, the District of Columbia, the Commonwealth of Puerto Rico, Guam, American Samoa, the United States Virgin Islands, the Northern Mariana Islands, or any other territory or possession over which the United States has jurisdiction.

(c) If the Contractor has certified to an exemption in accordance with one or more of the criteria in paragraph (b) of this clause, and after award of the contract circumstances change so that any of its owned or operated facilities used in the performance of this contract is no longer exempt--

(1) The Contractor shall notify the Contracting Officer; and

(2) The Contractor, as owner or operator of a facility used in the performance of this contract that is no longer exempt, shall (i) submit a Toxic Chemical Release Inventory Form (Form R) on or before July 1 for the prior calendar year during which the facility becomes eligible; and (ii) continue to file the annual Form R for the life of the contract for such facility.

(d) The Contracting Officer may terminate this contract or take other action as appropriate, if the Contractor fails to comply accurately and fully with the EPCRA and PPA toxic chemical release filing and reporting requirements.

(e) Except for acquisitions of commercial items, as defined in FAR Part 2, the Contractor shall--

(1) For competitive subcontracts expected to exceed $100,000 (including all options), include a solicitation provision substantially the same as the provision at FAR 52.223-13, Certification of Toxic Chemical Release Reporting; and

(2) Include in any resultant subcontract exceeding $100,000 (including all options), the substance of this clause, except this paragraph (e).

(End of clause)

52.225-9 BUY AMERICAN ACT—CONSTRUCTION MATERIALS (MAY 2002)

(a) Definitions. As used in this clause--

Component means an article, material, or supply incorporated directly into a construction material.

Construction material means an article, material, or supply brought to the construction site by the Contractor or a subcontractor for incorporation into the building or work. The term also includes an item brought to the site preassembled from articles, materials, or supplies. However, emergency life safety systems, such as emergency lighting, fire alarm, and audio evacuation systems, that are discrete systems incorporated into a public building or work and that are produced as complete systems, are evaluated as a single and distinct construction material regardless of when or how the individual parts or components of those systems are delivered to the construction site. Materials purchased directly by the Government are supplies, not construction material.

Cost of components means--

(1) For components purchased by the Contractor, the acquisition cost, including transportation costs to the place of incorporation into the end product (whether or not such costs are paid to a domestic firm), and any applicable duty (whether or not a duty-free entry certificate is issued); or

(2) For components manufactured by the Contractor, all costs associated with the manufacture of the component, including transportation costs as described in paragraph (1) of this definition, plus allocable overhead costs, but excluding profit. Cost of components does not include any costs associated with the manufacture of the end product.

Domestic construction material means--

(1) An unmanufactured construction material mined or produced in the United States; or

(2) A construction material manufactured in the United States, if the cost of its components mined, produced, or manufactured in the United States exceeds 50 percent of the cost of all its components. Components of foreign origin of the same class or kind for which nonavailability determinations have been made are treated as domestic.

Foreign construction material means a construction material other than a domestic construction material.

United States means the 50 States and the District of Columbia, U.S. territories and possessions, Puerto Rico, the Northern Mariana Islands, and any other place subject to U.S. jurisdiction, but does not include leased bases.

(b) Domestic preference. (1) This clause implements the Buy American Act (41 U.S.C. 10a-10d) by providing a preference for domestic construction material. The Contractor shall use only domestic construction material in performing this contract, except as provided in paragraphs (b)(2) and (b)(3) of this clause.

(2) This requirement does not apply to the construction material or components listed by the Government as follows:
[Contracting Officer to list applicable excepted materials or indicate “none”]

(3) The Contracting Officer may add other foreign construction material to the list in paragraph (b)(2) of this clause if the Government determines that

(i) The cost of domestic construction material would be unreasonable. The cost of a particular domestic construction material subject to the requirements of the Buy American Act is unreasonable when the cost of such material exceeds the cost of foreign material by more than 6 percent;

(ii) The application of the restriction of the Buy American Act to a particular construction material would be impracticable or inconsistent with the public interest; or

(iii) The construction material is not mined, produced, or manufactured in the United States in sufficient and reasonably available commercial quantities of a satisfactory quality.

(c) Request for determination of inapplicability of the Buy American Act. (1)(i) Any Contractor request to use foreign construction material in accordance with paragraph (b)(3) of this clause shall include adequate information for Government evaluation of the request, including--

(A) A description of the foreign and domestic construction materials;

(B) Unit of measure;

(C) Quantity;

(D) Price;

(E) Time of delivery or availability;

(F) Location of the construction project;

(G) Name and address of the proposed supplier; and

(H) A detailed justification of the reason for use of foreign construction materials cited in accordance with paragraph (b)(3) of this clause.

(ii) A request based on unreasonable cost shall include a reasonable survey of the market and a completed price comparison table in the format in paragraph (d) of this clause.

(iii) The price of construction material shall include all delivery costs to the construction site and any applicable duty (whether or not a duty-free certificate may be issued).

(iv) Any Contractor request for a determination submitted after contract award shall explain why the Contractor could not reasonably foresee the need for such determination and could not have requested the determination before contract award. If the Contractor does not submit a satisfactory explanation, the Contracting Officer need not make a determination.

(2) If the Government determines after contract award that an exception to the Buy American Act applies and the Contracting Officer and the Contractor negotiate adequate consideration, the Contracting Officer will modify the contract to allow use of the foreign construction material. However, when the basis for the exception is the unreasonable price of a domestic construction material, adequate consideration is not less than the differential established in paragraph (b)(3)(i) of this clause.

(3) Unless the Government determines that an exception to the Buy American Act applies, use of foreign construction material is noncompliant with the Buy American Act.

(d) Data. To permit evaluation of requests under paragraph (c) of this clause based on unreasonable cost, the Contractor shall include the following information and any applicable supporting data based on the survey of suppliers:

Foreign and Domestic Construction Materials Price Comparison

Construction material description	Unit of measure	Quantity	Price (dollars) \1\
Item 1			
Foreign construction material....	.....	.....	.....
Domestic construction material...	.....	.....	.....
Item 2			
Foreign construction material....	.....	.....	.....

Domestic construction material... ....

Include all delivery costs to the construction site and any applicable duty (whether or not a duty-free entry certificate is issued).
List name, address, telephone number, and contact for suppliers surveyed. Attach copy of response; if oral, attach summary.
Include other applicable supporting information.

(End of clause)

52.225-13 RESTRICTIONS ON CERTAIN FOREIGN PURCHASES (JUL 2000)

(a) The Contractor shall not acquire, for use in the performance of this contract, any supplies or services originating from sources within, or that were located in or transported from or through, countries whose products are banned from importation into the United States under regulations of the Office of Foreign Assets Control, Department of the Treasury. Those countries are Cuba, Iran, Iraq, Libya, North Korea, Sudan, the territory of Afghanistan controlled by the Taliban, and Serbia (excluding the territory of Kosovo).

(b) The Contractor shall not acquire for use in the performance of this contract any supplies or services from entities controlled by the government of Iraq.

(c) The Contractor shall insert this clause, including this paragraph (c), in all subcontracts.

(End of clause)

52.227-1 AUTHORIZATION AND CONSENT (JUL 1995)

(a) The Government authorizes and consents to all use and manufacture, in performing this contract or any subcontract at any tier, of any invention described in and covered by a United States patent (1) embodied in the structure or composition of any article the delivery of which is accepted by the Government under this contract or (2) used in machinery, tools, or methods whose use necessarily results from compliance by the Contractor or a subcontractor with (i) specifications or written provisions forming a part of this contract or (ii) specific written instructions given by the Contracting Officer directing the manner of performance. The entire liability to the Government for infringement of a patent of the United States shall be determined solely by the provisions of the indemnity clause, if any, included in this contract or any subcontract hereunder (including any lower-tier subcontract), and the Government assumes liability for all other infringement to the extent of the authorization and consent hereinabove granted.

(b) The Contractor agrees to include, and require inclusion of, this clause, suitably modified to identify the parties, in all subcontracts at any tier for supplies or services (including construction, architect-engineer services, and materials, supplies, models, samples, and design or testing services expected to exceed the simplified acquisition threshold (however, omission of this clause from any subcontract, including those at or below the simplified acquisition threshold, does not affect this authorization and consent.)

(End of clause)

52.227-2 NOTICE AND ASSISTANCE REGARDING PATENT AND COPYRIGHT INFRINGEMENT (AUG 1996)

(a) The Contractor shall report to the Contracting Officer, promptly and in reasonable written detail, each notice or claim of patent or copyright infringement based on the performance of this contract of which the Contractor has knowledge.

(b) In the event of any claim or suit against the Government on account of any alleged patent or copyright infringement arising out of the performance of this contract or out of the use of any supplies furnished or work or services performed under this contract, the Contractor shall furnish to the Government, when requested by the Contracting Officer, all evidence and information in possession of the Contractor pertaining to such suit or claim. Such evidence and information shall be furnished at the expense of the Government except where the Contractor has agreed to indemnify the Government.

(ix) The Contractor agrees to include, and require inclusion of, this clause in all subcontracts at any tier for supplies or services (including construction and architect-engineer subcontracts and those for material, supplies, models, samples, or design or testing services) expected to exceed the simplified acquisition threshold at (FAR) 2.101.to exceed the dollar amount set forth in 13.000 of the Federal Acquisition Regulation (FAR).

(End of clause)

52.227-4 PATENT INDEMNITY--CONSTRUCTION CONTRACTS (APR 1984)

Except as otherwise provided, the Contractor agrees to indemnify the Government and its officers, agents, and employees against liability, including costs and expenses, for infringement upon any United States patent (except a patent issued upon an application that is now or may hereafter be withheld from issue pursuant to a Secrecy Order under 35 U.S.C. 181) arising out of performing this contract or out of the use or disposal by or for the account of the Government of supplies furnished or work performed under this contract.

(End of clause)

52.228-1 BID GUARANTEE (SEP 1996)

(a) Failure to furnish a bid guarantee in the proper form and amount, by the time set for opening of bids, may be cause for rejection of the bid.

(b) The bidder shall furnish a bid guarantee in the form of a firm commitment, e.g., bid bond supported by good and sufficient surety or sureties acceptable to the Government, postal money order, certified check, cashier's check, irrevocable letter of credit, or, under Treasury Department regulations, certain bonds or notes of the United States. The Contracting Officer will return bid guarantees, other than bid bonds, (1) to unsuccessful bidders as soon as practicable after the opening of bids, and (2) to the successful bidder upon execution of contractual documents and bonds (including any necessary coinsurance or reinsurance agreements), as required by the bid as accepted.-

(c) The amount of the bid guarantee shall be twenty (20%) percent of the bid price or $3,000,000.00, whichever is less.-

(d) If the successful bidder, upon acceptance of its bid by the Government within the period specified for acceptance, fails to execute all contractual documents or furnish executed bond(s) within 10 days after receipt of the forms by the bidder, the Contracting Officer may terminate the contract for default.-

(e) In the event the contract is terminated for default, the bidder is liable for any cost of acquiring the work that exceeds the amount of its bid, and the bid guarantee is available to offset the difference.

(End of clause)

52.228-2 ADDITIONAL BOND SECURITY (OCT 1997)

The Contractor shall promptly furnish additional security required to protect the Government and persons supplying labor or materials under this contract if--

(a) Any surety upon any bond, or issuing financial institution for other security, furnished with this contract becomes unacceptable to the Government.

(b) Any surety fails to furnish reports on its financial condition as required by the Government;

(c) The contract price is increased so that the penal sum of any bond becomes inadequate in the opinion of the Contracting Officer; or

(d) An irrevocable letter of credit (ILC) used as security will expire before the end of the period of required security. If the Contractor does not furnish an acceptable extension or replacement ILC, or other acceptable substitute, at least 30 days before an ILC's scheduled expiration, the Contracting officer has the right to immediately draw on the ILC.

(End of clause)

52.228-5 INSURANCE--WORK ON A GOVERNMENT INSTALLATION (JAN 1997)

(a) The Contractor shall, at its own expense, provide and maintain during the entire performance of this contract, at least the kinds and minimum amounts of insurance required in the Schedule or elsewhere in the contract.

(b) Before commencing work under this contract, the Contractor shall notify the Contracting Officer in writing that the required insurance has been obtained. The policies evidencing required insurance shall contain an endorsement to the effect that any cancellation or any material change adversely affecting the Government's interest shall not be effective (1) for such period as the laws of the State in which this contract is to be performed prescribe, or (2) until 30 days after the insurer or the Contractor gives written notice to the Contracting Officer, whichever period is longer.

(c) The Contractor shall insert the substance of this clause, including this paragraph (c), in subcontracts under this contract that require work on a Government installation and shall require subcontractors to provide and maintain the insurance required in the Schedule or elsewhere in the contract. The Contractor shall maintain a copy of all subcontractors' proofs of required insurance, and shall make copies available to the Contracting Officer upon request.

(End of clause)

52.228-11 PLEDGES OF ASSETS (FEB 1992)

(a) Offerors shall obtain from each person acting as an individual surety on a bid guarantee, a performance bond, or a payment bond--

(1) Pledge of assets; and

(2) Standard Form 28, Affidavit of Individual Surety.

(b) Pledges of assets from each person acting as an individual surety shall be in the form of--

(1) Evidence of an escrow account containing cash, certificates of deposit, commercial or Government securities, or other assets described in FAR 28.203-2 (except see 28.203-2(b)(2) with respect to Government securities held in book entry form) and/or;

(2) A recorded lien on real estate. The offeror will be required to provide--

(i) Evidence of title in the form of a certificate of title prepared by a title insurance company approved by the United States Department of Justice. This title evidence must show fee simple title vested in the surety along with any concurrent owners; whether any real estate taxes are due and payable; and any recorded encumbrances against the property, including the lien filed in favor of the Government as required by FAR 28.203-3(d);

(ii) Evidence of the amount due under any encumbrance shown in the evidence of title;

(iii) A copy of the current real estate tax assessment of the property or a current appraisal dated no earlier than 6 months prior to the date of the bond, prepared by a professional appraiser who certifies that the appraisal has been conducted in accordance with the generally accepted appraisal standards as reflected in the Uniform Standards of Professional Appraisal Practice, as promulgated by the Appraisal Foundation.

(End of clause)

52.228-12 PROSPECTIVE SUBCONTRACTOR REQUESTS FOR BONDS. (OCT 1995)

In accordance with Section 806(a)(3) of Pub. L. 102-190, as amended by Sections 2091 and 8105 of Pub. L. 103-355, upon the request of a prospective subcontractor or supplier offering to furnish labor or material for the performance of this contract for which a payment bond has been furnished to the Government pursuant to the Miller Act, the Contractor shall promptly provide a copy of such payment bond to the requester.

(End of clause)

52.228-14 IRREVOCABLE LETTER OF CREDIT (DEC 1999)

(a) “Irrevocable letter of credit” (ILC), as used in this clause, means a written commitment by a federally insured financial institution to pay all or part of a stated amount of money, until the expiration date of the letter, upon presentation by the Government (the beneficiary) of a written demand therefor. Neither the financial institution nor the offeror/Contractor can revoke or condition the letter of credit.

(b) If the offeror intends to use an ILC in lieu of a bid bond, or to secure other types of bonds such as performance and payment bonds, the letter of credit and letter of confirmation formats in paragraphs (e) and (f) of this clause shall be used.

(c) The letter of credit shall be irrevocable, shall require presentation of no document other than a written demand and the ILC (including confirming letter, if any), shall be issued/confirmed by an acceptable federally insured financial institution as provided in paragraph (d) of this clause, and--

(1) If used as a bid guarantee, the ILC shall expire no earlier than 60 days after the close of the bid acceptance period;

(2) If used as an alternative to corporate or individual sureties as security for a performance or payment bond, the offeror/Contractor may submit an ILC with an initial expiration date estimated to cover the entire period for which financial security is required or may submit an ILC with an initial expiration date that is a minimum period of one year from the date of issuance. The ILC shall provide that, unless the issuer provides the beneficiary written notice of non-renewal at least 60 days in advance of the current expiration date, the ILC is automatically extended without

amendment for one year from the expiration date, or any future expiration date, until the period of required coverage is completed and the Contracting Officer provides the financial institution with a written statement waiving the right to payment. The period of required coverage shall be:

(i) For contracts subject to the Miller Act, the later of--

(A) One year following the expected date of final payment;

(B) For performance bonds only, until completion of any warranty period; or

(C) For payment bonds only, until resolution of all claims filed against the payment bond during the one-year period following final payment.

(ii) For contracts not subject to the Miller Act, the later of--

(A) 90 days following final payment; or

(B) For performance bonds only, until completion of any warranty period.

(d) Only federally insured financial institutions rated investment grade or higher shall issue or confirm the ILC. The offeror/Contractor shall provide the Contracting Officer a credit rating that indicates the financial institution has the required rating(s) as of the date of issuance of the ILC. Unless the financial institution issuing the ILC had letter of credit business of less than $25 million in the past year, ILCs over $5 million must be confirmed by another acceptable financial institution that had letter of credit business of less than $25 million in the past year.

(e) The following format shall be used by the issuing financial institution to create an ILC:

_____

[Issuing Financial Institution's Letterhead or Name and Address]

Issue Date _____

IRREVOCABLE LETTER OF CREDIT NO. _____

Account party's name _____

Account party's address _____

For Solicitation No. _____(for reference only)

TO: [U.S. Government agency]

[U.S. Government agency's address]

1. We hereby establish this irrevocable and transferable Letter of Credit in your favor for one or more drawings up to United States $_____. This Letter of Credit is payable at [issuing financial institution's and, if any, confirming financial institution's] office at [issuing financial institution's address and, if any, confirming financial institution's address] and expires with our close of business on _____, or any automatically extended expiration date.

2. We hereby undertake to honor your or the transferee's sight draft(s) drawn on the issuing or, if any, the confirming financial institution, for all or any part of this credit if presented with this Letter of Credit and confirmation, if any, at the office specified in paragraph 1 of this Letter of Credit on or before the expiration date or any automatically extended expiration date.

3. [This paragraph is omitted if used as a bid guarantee, and subsequent paragraphs are renumbered.] It is a condition of this Letter of Credit that it is deemed to be automatically extended without amendment for one year from the expiration date hereof, or any future expiration date, unless at least 60 days prior to any expiration date, we notify you or the transferee by registered mail, or other receipted means of delivery, that we elect not to consider this Letter of Credit renewed for any such additional period. At the time we notify you, we also agree to notify the account party (and confirming financial institution, if any) by the same means of delivery.

4. This Letter of Credit is transferable. Transfers and assignments of proceeds are to be effected without charge to either the beneficiary or the transferee/assignee of proceeds. Such transfer or assignment shall be only at the written direction of the Government (the beneficiary) in a form satisfactory to the issuing financial institution and the confirming financial institution, if any.

5. This Letter of Credit is subject to the Uniform Customs and Practice (UCP) for Documentary Credits, 1993 Revision, International Chamber of Commerce Publication No. 500, and to the extent not inconsistent therewith, to the laws of _____ [state of confirming financial institution, if any, otherwise state of issuing financial institution].

6. If this credit expires during an interruption of business of this financial institution as described in Article 17 of the UCP, the financial institution specifically agrees to effect payment if this credit is drawn against within 30 days after the resumption of our business.

Sincerely,

_____

[Issuing financial institution]

(f) The following format shall be used by the financial institution to confirm an ILC:

_____
[Confirming Financial Institution's Letterhead or Name and Address]

(Date) _____

Our Letter of Credit Advice Number _____

Beneficiary: _____ [U.S. Government agency]

Issuing Financial Institution: _____

Issuing Financial Institution's LC No.: _____

Gentlemen:

1. We hereby confirm the above indicated Letter of Credit, the original of which is attached, issued by _____ [name of issuing financial institution] for drawings of up to United States dollars _____/U.S. $_____ and expiring with our close of business on _____ [the expiration date], or any automatically extended expiration date.

2. Draft(s) drawn under the Letter of Credit and this Confirmation are payable at our office located at _____.

3. We hereby undertake to honor sight draft(s) drawn under and presented with the Letter of Credit and this

Confirmation at our offices as specified herein.

4. [This paragraph is omitted if used as a bid guarantee, and subsequent paragraphs are renumbered.] It is a condition of this confirmation that it be deemed automatically extended without amendment for one year from the expiration date hereof, or any automatically extended expiration date, unless:

(a) At least 60 days prior to any such expiration date, we shall notify the Contracting Officer, or the transferee and the issuing financial institution, by registered mail or other receipted means of delivery, that we elect not to consider this confirmation extended for any such additional period; or

(b) The issuing financial institution shall have exercised its right to notify you or the transferee, the account party, and ourselves, of its election not to extend the expiration date of the Letter of Credit.

5. This confirmation is subject to the Uniform Customs and Practice (UCP) for Documentary Credits, 1993 Revision, International Chamber of Commerce Publication No. 500, and to the extent not inconsistent therewith, to the laws of _____ [state of confirming financial institution].

6. If this confirmation expires during an interruption of business of this financial institution as described in Article 17 of the UCP, we specifically agree to effect payment if this credit is drawn against within 30 days after the resumption of our business.

Sincerely,

_____

[Confirming financial institution]

(g) The following format shall be used by the Contracting Officer for a sight draft to draw on the Letter of Credit:

SIGHT DRAFT

_____

[City, State]

(Date) _____

[Name and address of financial institution]

Pay to the order of _____ [Beneficiary Agency] _____ the sum of United States $_____.
This draft is drawn under Irrevocable Letter of Credit No. _____.

_____

[Beneficiary Agency]

By: _____

(End of clause)

52.228-15 PERFORMANCE AND PAYMENT BONDS--CONSTRUCTION (JUL 2000)-

(a) Definitions. As used in this clause--

Original contract price means the award price of the contract; or, for requirements contracts, the price payable for the estimated total quantity; or, for indefinite-quantity contracts, the price payable for the specified minimum quantity. Original contract price does not include the price of any options, except those options exercised at the time of contract award.

(b) Amount of required bonds. Unless the resulting contract price is $100,000 or less, the successful offeror shall furnish performance and payment bonds to the Contracting Officer as follows:

(1) Performance bonds (Standard Form 25). The penal amount of performance bonds at the time of contract award shall be 100 percent of the original contract price.

(2) Payment Bonds (Standard Form 25-A). The penal amount of payment bonds at the time of contract award shall be 100 percent of the original contract price.

(3) Additional bond protection. (i) The Government may require additional performance and payment bond protection if the contract price is increased. The increase in protection generally will equal 100 percent of the increase in contract price.

(ii) The Government may secure the additional protection by directing the Contractor to increase the penal amount of the existing bond or to obtain an additional bond.

(c) Furnishing executed bonds. The Contractor shall furnish all executed bonds, including any necessary reinsurance agreements, to the Contracting Officer, within the time period specified in the Bid Guarantee provision of the solicitation, or otherwise specified by the Contracting Officer, but in any event, before starting work.

(d) Surety or other security for bonds. The bonds shall be in the form of firm commitment, supported by corporate sureties whose names appear on the list contained in Treasury Department Circular 570, individual sureties, or by other acceptable security such as postal money order, certified check, cashier's check, irrevocable letter of credit, or, in accordance with Treasury Department regulations, certain bonds or notes of the United States. Treasury Circular 570 is published in the Federal Register or may be obtained from the U.S. Department of Treasury, Financial Management Service, Surety Bond Branch, 401 14th Street, NW, 2nd Floor, West Wing, Washington, DC 20227.

(e) Notice of subcontractor waiver of protection (40 U.S.C. 270b(c). Any waiver of the right to sue on the payment bond is void unless it is in writing, signed by the person whose right is waived, and executed after such person has first furnished labor or material for use in the performance of the contract.

(End of clause)

52.229-3 FEDERAL, STATE, AND LOCAL TAXES (JAN 1991)

(a) "Contract date," as used in this clause, means the date set for bid opening or, if this is a negotiated contract or a modification, the effective date of this contract or modification.

"All applicable Federal, State, and local taxes and duties," as used in this clause, means all taxes and duties, in effect on the contract date, that the taxing authority is imposing and collecting on the transactions or property covered by this contract.

"After-imposed Federal tax," as used in this clause, means any new or increased Federal excise tax or duty, or tax that was exempted or excluded on the contract date but whose exemption was later revoked or reduced during the contract period, on the transactions or property covered by this contract that the Contractor is required to pay or bear as the result of legislative, judicial, or administrative action taking effect after the contract date. It does not include

social security tax or other employment taxes.
"After-relieved Federal tax," as used in this clause, means any amount of Federal excise tax or duty, except social security or other employment taxes, that would otherwise have been payable on the transactions or property covered by this contract, but which the Contractor is not required to pay or bear, or for which the Contractor obtains a refund or drawback, as the result of legislative, judicial, or administrative action taking effect after the contract date.

(b) The contract price includes all applicable Federal, State, and local taxes and duties.

(c) The contract price shall be increased by the amount of any after-imposed Federal tax, provided the Contractor warrants in writing that no amount for such newly imposed Federal excise tax or duty or rate increase was included in the contract price, as a contingency reserve or otherwise.

(d) The contract price shall be decreased by the amount of any after-relieved Federal tax.

(e) The contract price shall be decreased by the amount of any Federal excise tax or duty, except social security or other employment taxes, that the Contractor is required to pay or bear, or does not obtain a refund of, through the Contractor's fault, negligence, or failure to follow instructions of the Contracting Officer.

(f) No adjustment shall be made in the contract price under this clause unless the amount of the adjustment exceeds $250.

(g) The Contractor shall promptly notify the Contracting Officer of all matters relating to any Federal excise tax or duty that reasonably may be expected to result in either an increase or decrease in the contract price and shall take appropriate action as the Contracting Officer directs.

(h) The Government shall, without liability, furnish evidence appropriate to establish exemption from any Federal, State, or local tax when the Contractor requests such evidence and a reasonable basis exists to sustain the exemption.

(End of clause)

52.229-5 TAXES--CONTRACTS PERFORMED IN U.S. POSSESSIONS OR PUERTO RICO (APR 1984)

The term "local taxes," as used in the Federal, State, and local taxes clause of this contract, includes taxes imposed by a possession of the United States or by Puerto Rico.

(End of clause)

52.232-5 PAYMENTS UNDER FIXED-PRICE CONSTRUCTION CONTRACTS (MAY 1997)

(a) Payment of price. The Government shall pay the Contractor the contract price as provided in this contract.

(b) Progress payments. The Government shall make progress payments monthly as the work proceeds, or at more frequent intervals as determined by the Contracting Officer, on estimates of work accomplished which meets the standards of quality established under the contract, as approved by the Contracting Officer.

(1) The Contractor's request for progress payments shall include the following substantiation:

(i) An itemization of the amounts requested, related to the various elements of work required by the contract covered by the payment requested.

(ii) A listing of the amount included for work performed by each subcontractor under the contract.

(iii) A listing of the total amount of each subcontract under the contract.

(iv) A listing of the amounts previously paid to each such subcontractor under the contract.

(v) Additional supporting data in a form and detail required by the Contracting Officer.

(2) In the preparation of estimates, the Contracting Officer may authorize material delivered on the site and preparatory work done to be taken into consideration. Material delivered to the Contractor at locations other than the site also may be taken into consideration if--

(i) Consideration is specifically authorized by this contract; and

(ii) The Contractor furnishes satisfactory evidence that it has acquired title to such material and that the material will be used to perform this contract.

(c) Contractor certification. Along with each request for progress payments, the Contractor shall furnish the following certification, or payment shall not be made: (However, if the Contractor elects to delete paragraph (c)(4) from the certification, the certification is still acceptable.)

I hereby certify, to the best of my knowledge and belief, that--

(1) The amounts requested are only for performance in accordance with the specifications, terms, and conditions of the contract;

(2) Payments to subcontractors and suppliers have been made from previous payments received under the contract, and timely payments will be made from the proceeds of the payment covered by this certification, in accordance with subcontract agreements and the requirements of chapter 39 of Title 31, United States Code;

(3) This request for progress payments does not include any amounts which the prime contractor intends to withhold or retain from a subcontractor or supplier in accordance with the terms and conditions of the subcontract; and

(4) This certification is not to be construed as final acceptance of a subcontractor's performance.

_____

(Name)

_____

(Title)

_____

(Date)

(d) Refund of unearned amounts. If the Contractor, after making a certified request for progress payments, discovers that a portion or all of such request constitutes a payment for performance by the Contractor that fails to conform to the specifications, terms, and conditions of this contract (hereinafter referred to as the "unearned amount"), the Contractor shall--

(1) Notify the Contracting Officer of such performance deficiency; and

(2) Be obligated to pay the Government an amount (computed by the Contracting Officer in the manner provided in paragraph (j) of this clause) equal to interest on the unearned amount from the 8th day after the date of receipt of the

unearned amount until--

(i) The date the Contractor notifies the Contracting Officer that the performance deficiency has been corrected; or

(ii) The date the Contractor reduces the amount of any subsequent certified request for progress payments by an amount equal to the unearned amount.

(e) Retainage. If the Contracting Officer finds that satisfactory progress was achieved during any period for which a progress payment is to be made, the Contracting Officer shall authorize payment to be made in full. However, if satisfactory progress has not been made, the Contracting Officer may retain a maximum of 10 percent of the amount of the payment until satisfactory progress is achieved. When the work is substantially complete, the Contracting Officer may retain from previously withheld funds and future progress payments that amount the Contracting Officer considers adequate for protection of the Government and shall release to the Contractor all the remaining withheld funds. Also, on completion and acceptance of each separate building, public work, or other division of the contract, for which the price is stated separately in the contract, payment shall be made for the completed work without retention of a percentage.

(f) Title, liability, and reservation of rights. All material and work covered by progress payments made shall, at the time of payment, become the sole property of the Government, but this shall not be construed as--

(1) Relieving the Contractor from the sole responsibility for all material and work upon which payments have been made or the restoration of any damaged work; or

(2) Waiving the right of the Government to require the fulfillment of all of the terms of the contract.

(g) Reimbursement for bond premiums. In making these progress payments, the Government shall, upon request, reimburse the Contractor for the amount of premiums paid for performance and payment bonds (including coinsurance and reinsurance agreements, when applicable) after the Contractor has furnished evidence of full payment to the surety. The retainage provisions in paragraph (e) of this clause shall not apply to that portion of progress payments attributable to bond premiums.

(h) Final payment. The Government shall pay the amount due the Contractor under this contract after--

(1) Completion and acceptance of all work;

(2) Presentation of a properly executed voucher; and

(3) Presentation of release of all claims against
the Government arising by virtue of this contract, other than claims, in stated amounts, that the Contractor has specifically excepted from the operation of the release. A release may also be required of the assignee if the Contractor's claim to amounts payable under this contract has been assigned under the Assignment of Claims Act of 1940 (31 U.S.C. 3727 and 41 U.S.C. 15).

(i) Limitation because of undefinitized work. Notwithstanding any provision of this contract, progress payments shall not exceed 80 percent on work accomplished on undefinitized contract actions. A "contract action" is any action resulting in a contract, as defined in FAR Subpart 2.1, including contract modifications for additional supplies or services, but not including contract modifications that are within the scope and under the terms of the contract, such as contract modifications issued pursuant to the Changes clause, or funding and other administrative changes.

(j) Interest computation on unearned amounts. In accordance with 31 U.S.C. 3903(c)(1), the amount payable under subparagraph (d)(2) of this clause shall be--

(1) Computed at the rate of average bond equivalent rates of 91-day Treasury bills auctioned at the most recent auction of such bills prior to the date the Contractor receives the unearned amount; and

(2) Deducted from the next available payment to the Contractor.

(End of clause)

52.232-10 PAYMENTS UNDER FIXED-PRICE ARCHITECT-ENGINEER CONTRACTS (AUG 1987)

(a) Estimates shall be made monthly of the amount and value of the work and services performed by the Contractor under this contract which meet the standards of quality established under this contract. The estimates shall be prepared by the Contractor and accompanied by any supporting data required by the Contracting Officer.

(b) Upon approval of the estimate by the Contracting Officer, payment upon properly executed vouchers shall be made to the Contractor, as soon as practicable, of 90 percent of the approved amount, less all previous payments; provided, that payment may be made in full during any months in which the Contracting Officer determines that performance has been satisfactory. Also, whenever the Contracting Officer determines that the work is substantially complete and that the amount retained is in excess of the amount adequate for the protection of the Government, the Contracting Officer may release the excess amount to the Contractor.

(c) Upon satisfactory completion by the Contractor and acceptance by the Contracting Officer of the work done by the Contractor under the "Statement of Architect-Engineer Services", the Contractor will be paid the unpaid balance of any money due for work under the statement, including retained percentages relating to this portion of the work. Upon satisfactory completion and final acceptance of the construction work, the Contractor shall be paid any unpaid balance of money due under this contract.

(d) Before final payment under the contract, or before settlement upon termination of the contract, and as a condition precedent thereto, the Contractor shall execute and deliver to the Contracting Officer a release of all claims against the Government arising under or by virtue of this contract, other than any claims that are specifically excepted by the Contractor from the operation of the release in amounts stated in the release.

(e) Notwithstanding any other provision in this contract, and specifically paragraph (b) of this clause, progress payments shall not exceed 80 percent on work accomplished on undefinitized contract actions. A "contract action" is any action resulting in a contract, as defined in FAR Subpart 2.1, including contract modifications for additional supplies or services, but not including contract modifications that are within the scope and under the terms of the contract, such as contract modifications issued pursuant to the Changes clause, or funding and other administrative changes.

(End of clause)

52.232-17 INTEREST (JUNE 1996)

(a) Except as otherwise provided in this contract under a Price Reduction for Defective Cost or Pricing Data clause or a Cost Accounting Standards clause, all amounts that become payable by the Contractor to the Government under this contract (net of any applicable tax credit under the Internal Revenue Code (26 U.S.C. 1481)) shall bear simple interest from the date due until paid unless paid within 30 days of becoming due. The interest rate shall be the interest rate established by the Secretary of the Treasury as provided in Section 12 of the Contract Disputes Act of 1978 (Public Law 95-563), which is applicable to the period in which the amount becomes due, as provided in paragraph (b) of this clause, and then at the rate applicable for each six-month period as fixed by the Secretary until the amount is paid. reproduce, prepare derivative works, distribute copies to the public, and (b) Amounts shall be due at the earliest of the following dates:

(1) The date fixed under this contract.

(2) The date of the first written demand for payment consistent with this contract, including any demand resulting from a default termination.

(3) The date the Government transmits to the Contractor a proposed supplemental agreement to confirm completed negotiations establishing the amount of debt.

(4) If this contract provides for revision of prices, the date of written notice to the Contractor stating the amount of refund payable in connection with a pricing proposal or a negotiated pricing agreement not confirmed by contract modification.

(c) The interest charge made under this clause may be reduced under the procedures prescribed in 32.614-2 of the Federal Acquisition Regulation in effect on the date of this contract.

(End of clause)

52.232-23 ASSIGNMENT OF CLAIMS (JAN 1986) - ALTERNATE I (APR 1984)

(a) The Contractor, under the Assignment of Claims Act, as amended, 31 U.S.C. 3727, 41 U.S.C. 15 (hereafter referred to as "the Act"), may assign its rights to be paid amounts due or to become due as a result of the performance of this contract to a bank, trust company, or other financing institution, including any Federal lending agency. The assignee under such an assignment may thereafter further assign or reassign its right under the original assignment to any type of financing institution described in the preceding sentence. Unless otherwise stated in this contract, payments to an assignee of any amounts due or to become due under this contract shall not, to the extent specified in the Act, be subject to reduction or setoff.

(b) Any assignment or reassignment authorized under the Act and this clause shall cover all unpaid amounts payable under this contract, and shall not be made to more than one party, except that an assignment or reassignment may be made to one party as agent or trustee for two or more parties participating in the financing of this contract.

(c) The Contractor shall not furnish or disclose to any assignee under this contract any classified document (including this contract) or information related to work under this contract until the Contracting Officer authorizes such action in writing.

(End of clause)

52.232-26 PROMPT PAYMENT FOR FIXED-PRICE ARCHITECT-ENGINEER CONTRACTS (FEB 2002)

Notwithstanding any other payment terms in this contract, the Government will make invoice payments under the terms and conditions specified in this clause. The Government considers payment as being made on the day a check is dated or the date of an electronic funds transfer. Definitions of pertinent terms are set forth in sections 2.101, 32.001, and 32.902 of the Federal Acquisition Regulation. All days referred to in this clause are calendar days, unless otherwise specified. (However, see paragraph (a)(3) of this clause concerning payments due on Saturdays, Sundays, and legal holidays.)

(a) Invoice payments--(1) Due date. The due date for making invoice payments is--

(i) For work or services completed by the Contractor, the later of the following two events:

(A) The 30th day after the designated billing office receives a proper invoice from the Contractor (except as provided in paragraph (a)(1)(iii) of this clause).

(B) The 30th day after Government acceptance of the work or services completed by the Contractor. For a final invoice, when the payment amount is subject to contract settlement actions (e.g., release of claims), acceptance is deemed to occur on the effective date of the settlement.

(ii) The due date for progress payments is the 30th day after Government approval of Contractor estimates of work or services accomplished.

(iii) If the designated billing office fails to annotate the invoice or payment request with the actual date of receipt at the time of receipt, the payment due date is the 30th day after the date of the Contractor's invoice or payment request, provided the designated billing office receives a proper invoice or payment request and there is no disagreement over quantity, quality, or Contractor compliance with contract requirements.

(2) Contractor's invoice. The Contractor shall prepare and submit invoices to the designated billing office specified in the contract. A proper invoice must include the items listed in paragraphs (a)(2)(i) through (a)(2)(x) of this clause. If the invoice does not comply with these requirements, the designated billing office will return it within 7 days after receipt, with the reasons why it is not a proper invoice. When computing any interest penalty owed the Contractor, the Government will take into account if the Government notifies the Contractor of an improper invoice in an untimely manner.

(i) Name and address of the Contractor.

(ii) Invoice date and invoice number. (The Contractor should date invoices as close as possible to the date of mailing or transmission.)

(iii) Contract number or other authorization for work or services performed (including order number and contract line item number).

(iv) Description of work or services performed.

(v) Delivery and payment terms (e.g., discount for prompt payment terms).

(vi) Name and address of Contractor official to whom payment is to be sent (must be the same as that in the contract or in a proper notice of assignment).

(vii) Name (where practicable), title, phone number, and mailing address of person to notify in the event of a defective invoice.

(viii) Taxpayer Identification Number (TIN). The Contractor shall include its TIN on the invoice only if required elsewhere in this contract.

(ix) Electronic funds transfer (EFT) banking information.

(A) The Contractor shall include EFT banking information on the invoice only if required elsewhere in this contract.

(B) If EFT banking information is not required to be on the invoice, in order for the invoice to be a proper invoice, the Contractor shall have submitted correct EFT banking information in accordance with the applicable solicitation provision (e.g., 52.232-38, Submission of Electronic Funds Transfer Information with Offer), contract clause (e.g., 52.232-33, Payment by Electronic Funds Transfer--Central Contractor Registration, or 52.232-34,Payment by Electronic Funds Transfer--Other Than Central Contractor Registration), or applicable agency procedures.

(C) EFT banking information is not required if the Government waived the requirement to pay by EFT.

(x) Any other information or documentation required by the contract.

(3) Interest penalty. The designated payment office will pay an interest penalty automatically, without request from the Contractor, if payment is not made by the due date and the conditions listed in paragraphs (a)(3)(i) through (a)(3)(iii) of this clause are met, if applicable. However, when the due date falls on a Saturday, Sunday, or legal holiday, the designated payment office may make payment on the following working day without incurring a late payment interest penalty.

(i) The designated billing office received a proper invoice.

(ii) The Government processed a receiving report or other Government documentation authorizing payment and there was no disagreement over quantity, quality, Contractor compliance with any contract term or condition, or requested progress payment amount.

(iii) In the case of a final invoice for any balance of funds due the Contractor for work or services performed, the amount was not subject to further contract settlement actions between the Government and the Contractor.

(4) Computing penalty amount. The Government will compute the interest penalty in accordance with the Office of Management and Budget prompt payment regulations at 5 CFR part 1315.

(i) For the sole purpose of computing an interest penalty that might be due the Contractor, Government acceptance or approval is deemed to occur constructively as shown in paragraphs (a)(4)(i)(A) and (B) of this clause. If actual acceptance or approval occurs within the constructive acceptance or approval period, the Government will base the determination of an interest penalty on the actual date of acceptance or approval. Constructive acceptance or constructive approval requirements do not apply if there is a disagreement over quantity, quality, Contractor compliance with a contract provision, or requested progress payment amounts. These requirements also do not compel Government officials to accept work or services, approve Contractor estimates, perform contract administration functions, or make payment prior to fulfilling their responsibilities.

(A) For work or services completed by the Contractor, Government acceptance is deemed to occur constructively on the 7th day after the Contractor completes the work or services in accordance with the terms and conditions of the contract.

(B) For progress payments, Government approval is deemed to occur on the 7th day after the designated billing office receives the Contractor estimates.

(ii) The prompt payment regulations at 5 CFR 1315.10(c) do not require the Government to pay interest penalties if payment delays are due to disagreement between the Government and the Contractor over the payment amount or other issues involving contract compliance, or on amounts temporarily withheld or retained in accordance with the terms of the contract. The Government and the Contractor shall resolve claims involving disputes, and any interest that may be payable in accordance with the clause at FAR 52.233-1, Disputes.

(5) Discounts for prompt payment. The designated payment office will pay an interest penalty automatically, without request from the Contractor, if the Government takes a discount for prompt payment improperly. The Government will calculate the interest penalty in accordance with 5 CFR part 1315.

(6) Additional interest penalty. (i) The designated payment office will pay a penalty amount, calculated in accordance with the prompt payment regulations at 5 CFR part 1315, in addition to the interest penalty amount only if--

(A) The Government owes an interest penalty of $1 or more;

(B) The designated payment office does not pay the interest penalty within 10 days after the date the invoice amount is paid; and

(C) The contractor makes a written demand to the designated payment office for additional penalty payment, in accordance with paragraph (a)(6)(ii) of this clause, postmarked not later than 40 days after the date the invoice amount is paid.

(ii)(A) The Contractor shall support written demands for additional penalty payments with the following data. The Government will not request any additional data. The Contractor shall--

(1) Specifically assert that late payment interest is due under a specific invoice, and request payment of all overdue late payment interest penalty and such additional penalty as may be required;

(2) Attach a copy of the invoice on which the unpaid late payment interest is due; and

(3) State that payment of the principal has been received, including the date of receipt.

(B) If there is no postmark or the postmark is illegible--

(1) The designated payment office that receives the demand will annotate it with the date of receipt, provided the demand is received on or before the 40th day after payment was made; or

(2) If the designated payment office fails to make the required annotation, the Government will determine the demand's validity based on the date the Contractor has placed on the demand, provided such date is no later than the 40th day after payment was made.

(iii) The additional penalty does not apply to payments regulated by other Government regulations (e.g., payments under utility contracts subject to tariffs and regulation).

(b) Contract financing payments. If this contract provides for contract financing, the Government will make contract financing payments in accordance with the applicable contract financing clause.

(c) Overpayments. If the Contractor becomes aware of a duplicate payment or that the Government has otherwise overpaid on an invoice payment, the Contractor shall immediately notify the Contracting Officer and request instructions for disposition of the overpayment.

(End of clause)

52.232-27 PROMPT PAYMENT FOR CONSTRUCTION CONTRACTS (FEB 2002)

Notwithstanding any other payment terms in this contract, the Government will make invoice payments under the terms and conditions specified in this clause. The Government considers payment as being made on the day a check is dated or the date of an electronic funds transfer. Definitions of pertinent terms are set forth in sections 2.101, 32.001, and 32.902 of the Federal Acquisition Regulation. All days referred to in this clause are calendar days, unless otherwise specified. (However, see paragraph (a)(3) concerning payments due on Saturdays, Sundays, and legal holidays.)

(a) Invoice payments--(1) Types of invoice payments. For purposes of this clause, there are several types of invoice payments that may occur under this contract, as follows:

(i) Progress payments, if provided for elsewhere in this contract, based on Contracting Officer approval of the estimated amount and value of work or services performed, including payments for reaching milestones in any project.

(A) The due date for making such payments is 14 days after the designated billing office receives a proper payment request. If the designated billing office fails to annotate the payment request with the actual date of receipt at the time of receipt, the payment due date is the 14th day after the date of the Contractor's payment request, provided the designated billing office receives a proper payment request and there is no disagreement over quantity, quality, or Contractor compliance with contract requirements.

(B) The due date for payment of any amounts retained by the Contracting Officer in accordance with the clause at 52.232-5, Payments Under Fixed-Price Construction Contracts, is as specified in the contract or, if not specified, 30 days after approval by the Contracting Officer for release to the Contractor.

(ii) Final payments based on completion and acceptance of all work and presentation of release of all claims against the Government arising by virtue of the contract, and payments for partial deliveries that have been accepted by the Government (e.g., each separate building, public work, or other division of the contract for which the price is stated separately in the contract).

(A) The due date for making such payments is the later of the following two events:

(1) The 30th day after the designated billing office receives a proper invoice from the Contractor.

(2) The 30th day after Government acceptance of the work or services completed by the Contractor. For a final invoice when the payment amount is subject to contract settlement actions (e.g., release of claims), acceptance is deemed to occur on the effective date of the contract settlement.

(B) If the designated billing office fails to annotate the invoice with the date of actual receipt at the time of receipt, the invoice payment due date is the 30th day after the date of the Contractor's invoice, provided the designated billing office receives a proper invoice and there is no disagreement over quantity, quality, or Contractor compliance with contract requirements.

(2) Contractor's invoice. The Contractor shall prepare and submit invoices to the designated billing office specified in the contract. A proper invoice must include the items listed in paragraphs (a)(2)(i) through (a)(2)(xi) of this clause. If the invoice does not comply with these requirements, the designated billing office must return it within 7 days after receipt, with the reasons why it is not a proper invoice. When computing any interest penalty owed the Contractor, the Government will take into account if the Government notifies the Contractor of an improper invoice in an untimely manner.

(i) Name and address of the Contractor.

(ii) Invoice date and invoice number. (The Contractor should date invoices as close as possible to the date of mailing or transmission.)

(iii) Contract number or other authorization for work or services performed (including order number and contract line item number).

(iv) Description of work or services performed.

(v) Delivery and payment terms (e.g., discount for prompt payment terms).

(vi) Name and address of Contractor official to whom payment is to be sent (must be the same as that in the contract or in a proper notice of assignment).

(vii) Name (where practicable), title, phone number, and mailing address of person to notify in the event of a defective invoice.

(viii) For payments described in paragraph (a)(1)(i) of this clause, substantiation of the amounts requested and certification in accordance with the requirements of the clause at 52.232-5, Payments Under Fixed-Price Construction Contracts.

(ix) Taxpayer Identification Number (TIN). The Contractor shall include its TIN on the invoice only if required elsewhere in this contract.

(x) Electronic funds transfer (EFT) banking information.

(A) The Contractor shall include EFT banking information on the invoice only if required elsewhere in this contract.

(B) If EFT banking information is not required to be on the invoice, in order for the invoice to be a proper invoice, the Contractor shall have submitted correct EFT banking information in accordance with the applicable solicitation provision (e.g., 52.232-38, Submission of Electronic Funds Transfer Information with Offer), contract clause (e.g., 52.232-33, Payment by Electronic Funds Transfer--Central Contractor Registration, or 52.232-34, Payment by Electronic Funds Transfer--Other Than Central Contractor Registration), or applicable agency procedures.

(C) EFT banking information is not required if the Government waived the requirement to pay by EFT.

(xi) Any other information or documentation required by the contract.

(3) Interest penalty. The designated payment office will pay an interest penalty automatically, without request from the Contractor, if payment is not made by the due date and the conditions listed in paragraphs (a)(3)(i) through (a)(3)(iii) of this clause are met, if applicable. However, when the due date falls on a Saturday, Sunday, or legal holiday, the designated payment office may make payment on the following working day without incurring a late payment interest penalty.

(i) The designated billing office received a proper invoice.

(ii) The Government processed a receiving report or other Government documentation authorizing payment and there was no disagreement over quantity, quality, Contractor compliance with any contract term or condition, or requested progress payment amount.

(iii) In the case of a final invoice for any balance of funds due the Contractor for work or services performed, the amount was not subject to further contract settlement actions between the Government and the Contractor.

(4) Computing penalty amount. The Government will compute the interest penalty in accordance with the Office of Management and Budget prompt payment regulations at 5 CFR part 1315.

(i) For the sole purpose of computing an interest penalty that might be due the Contractor for payments described in paragraph (a)(1)(ii) of this clause, Government acceptance or approval is deemed to occur constructively on the 7th day after the Contractor has completed the work or services in accordance with the terms and conditions of the contract. If actual acceptance or approval occurs within the constructive acceptance or approval period, the Government will base the determination of an interest penalty on the actual date of acceptance or approval. Constructive acceptance or constructive approval requirements do not apply if there is a disagreement over quantity, quality, or Contractor compliance with a contract provision. These requirements also do not compel Government officials to accept work or services, approve Contractor estimates, perform contract administration functions, or make payment prior to fulfilling their responsibilities.

(ii) The prompt payment regulations at 5 CFR 1315.10(c) do not require the Government to pay interest penalties if payment delays are due to disagreement between the Government and the Contractor over the payment amount or other issues involving contract compliance, or on amounts temporarily withheld or retained in accordance with the terms of the contract. The Government and the Contractor shall resolve claims involving disputes, and any interest that may be payable in accordance with the clause at FAR 52.233-1, Disputes.

(5) Discounts for prompt payment. The designated payment office will pay an interest penalty automatically, without request from the Contractor, if the Government takes a discount for prompt payment improperly. The Government will calculate the interest penalty in accordance with the prompt payment regulations at 5 CFR part 1315.

(6) Additional interest penalty. (i) The designated payment office will pay a penalty amount, calculated in accordance with the prompt payment regulations at 5 CFR part 1315 in addition to the interest penalty amount only if--

(A) The Government owes an interest penalty of $1 or more;

(B) The designated payment office does not pay the interest penalty within 10 days after the date the invoice amount is paid; and

(C) The Contractor makes a written demand to the designated payment office for additional penalty payment, in accordance with paragraph (a)(6)(ii) of this clause, postmarked not later than 40 days after the date the invoice amount is paid.

(ii)(A) The Contractor shall support written demands for additional penalty payments with the following data. The Government will not request any additional data. The Contractor shall--

(1) Specifically assert that late payment interest is due under a specific invoice, and request payment of all overdue late payment interest penalty and such additional penalty as may be required;

(2) Attach a copy of the invoice on which the unpaid late payment interest was due; and

(3) State that payment of the principal has been received, including the date of receipt.

(B) If there is no postmark or the postmark is illegible--

(1) The designated payment office that receives the demand will annotate it with the date of receipt provided the demand is received on or before the 40th day after payment was made; or

(2) If the designated payment office fails to make the required annotation, the Government will determine the demand's validity based on the date the Contractor has placed on the demand, provided such date is no later than the 40th day after payment was made.

(b) Contract financing payments. If this contract provides for contract financing, the Government will make contract financing payments in accordance with the applicable contract financing clause.

(c) Subcontract clause requirements. The Contractor shall include in each subcontract for property or services (including a material supplier) for the purpose of performing this contract the following:

(1) Prompt payment for subcontractors. A payment clause that obligates the Contractor to pay the subcontractor for satisfactory performance under its subcontract not later than 7 days from receipt of payment out of such amounts as are paid to the Contractor under this contract.

(2) Interest for subcontractors. An interest penalty clause that obligates the Contractor to pay to the subcontractor an interest penalty for each payment not made in accordance with the payment clause--

(i) For the period beginning on the day after the required payment date and ending on the date on which payment of the amount due is made; and

(ii) Computed at the rate of interest established by the Secretary of the Treasury, and published in the Federal Register, for interest payments under section 12 of the Contract Disputes Act of 1978 (41 U.S.C. 611) in effect at the time the Contractor accrues the obligation to pay an interest penalty.

(3) Subcontractor clause flowdown. A clause requiring each subcontractor to use:

(i) Include a payment clause and an interest penalty clause conforming to the standards set forth in paragraphs (c)(1) and (c)(2) of this clause in each of its subcontracts; and

(ii) Require each of its subcontractors to include such clauses in their subcontracts with each lower-tier subcontractor or supplier.

(d) Subcontract clause interpretation. The clauses required by paragraph (c) of this clause shall not be construed to impair the right of the Contractor or a subcontractor at any tier to negotiate, and to include in their subcontract, provisions that--

(1) Retainage permitted. Permit the Contractor or a subcontractor to retain (without cause) a specified percentage of each progress payment otherwise due to a subcontractor for satisfactory performance under the subcontract without incurring any obligation to pay a late payment interest penalty, in accordance with terms and conditions agreed to by the parties to the subcontract, giving such recognition as the parties deem appropriate to the ability of a subcontractor to furnish a performance bond and a payment bond;

(2) Withholding permitted. Permit the Contractor or subcontractor to make a determination that part or all of the subcontractor's request for payment may be withheld in accordance with the subcontract agreement; and

(3) Withholding requirements. Permit such withholding without incurring any obligation to pay a late payment penalty if--

(i) A notice conforming to the standards of paragraph (g) of this clause previously has been furnished to the subcontractor; and

(ii) The Contractor furnishes to the Contracting Officer a copy of any notice issued by a Contractor pursuant to paragraph (d)(3)(i) of this clause.

(e) Subcontractor withholding procedures. If a Contractor, after making a request for payment to the Government but before making a payment to a subcontractor for the subcontractor's performance covered by the payment request, discovers that all or a portion of the payment otherwise due such subcontractor is subject to withholding from the subcontractor in accordance with the subcontract agreement, then the Contractor shall--

(1) Subcontractor notice. Furnish to the subcontractor a notice conforming to the standards of paragraph (g) of this clause as soon as practicable upon ascertaining the cause giving rise to a withholding, but prior to the due date for subcontractor payment;

(2) Contracting Officer notice. Furnish to the Contracting Officer, as soon as practicable, a copy of the notice furnished to the subcontractor pursuant to paragraph (e)(1) of this clause;

(3) Subcontractor progress payment reduction. Reduce the subcontractor's progress payment by an amount not to exceed the amount specified in the notice of withholding furnished under paragraph (e)(1) of this clause;

(4) Subsequent subcontractor payment. Pay the subcontractor as soon as practicable after the correction of the identified subcontract performance deficiency, and--

(i) Make such payment within--

(A) Seven days after correction of the identified subcontract performance deficiency (unless the funds therefor must be recovered from the Government because of a reduction under paragraph
(e)(5)(i)) of this clause; or

(B) Seven days after the Contractor recovers such funds from the Government; or

(ii) Incur an obligation to pay a late payment interest penalty computed at the rate of interest established by the Secretary of the Treasury, and published in the Federal Register, for interest payments under section 12 of the Contracts Disputes Act of 1978 (41 U.S.C. 611) in effect at the time the Contractor accrues the obligation to pay an interest penalty;

(5) Notice to Contracting Officer. Notify the Contracting Officer upon--

(i) Reduction of the amount of any subsequent certified application for payment; or

(ii) Payment to the subcontractor of any withheld amounts of a progress payment, specifying--

(A) The amounts withheld under paragraph (e)(1) of this clause; and

(B) The dates that such withholding began and ended; and

(6) Interest to Government. Be obligated to pay to the Government an amount equal to interest on the withheld payments (computed in the manner provided in 31 U.S.C. 3903(c)(1)), from the 8th day after receipt of the withheld amounts from the Government until--

(i) The day the identified subcontractor performance deficiency is corrected; or

(ii) The date that any subsequent payment is reduced under paragraph (e)(5)(i) of this clause.

(f) Third-party deficiency reports--(1) Withholding from subcontractor. If a Contractor, after making payment to a first-tier subcontractor, receives from a supplier or subcontractor of the first-tier subcontractor (hereafter referred to as a “second-tier subcontractor”) a written notice in accordance with section 2 of the Act of August 24, 1935 (40 U.S.C. 270b, Miller Act), asserting a deficiency in such first-tier subcontractor's performance under the contract for which the Contractor may be ultimately liable, and the Contractor determines that all or a portion of future payments otherwise due such first-tier subcontractor is subject to withholding in accordance with the subcontract agreement, the Contractor may, without incurring an obligation to pay an interest penalty under paragraph (e)(6) of this clause--

(i) Furnish to the first-tier subcontractor a notice conforming to the standards of paragraph (g) of this clause as soon as practicable upon making such determination; and

(ii) Withhold from the first-tier subcontractor's next available progress payment or payments an amount not to exceed the amount specified in the notice of withholding furnished under paragraph (f)(1)(i) of this clause.

(2) Subsequent payment or interest charge. As soon as practicable, but not later than 7 days after receipt of satisfactory written notification that the identified subcontract performance deficiency has been corrected, the Contractor shall--

(i) Pay the amount withheld under paragraph (f)(1)(ii) of this clause to such first-tier subcontractor; or

(ii) Incur an obligation to pay a late payment interest penalty to such first-tier subcontractor computed at the rate of interest established by the Secretary of the Treasury, and published in the Federal Register, for interest payments under section 12 of the Contracts DisputesAct of 1978 (41 U.S.C. 611) in effect at the time the Contractor accrues the obligation to pay an interest penalty.

(g) Written notice of subcontractor withholding. The Contractor shall issue a written notice of any withholding to a subcontractor (with a copy furnished to the Contracting Officer), specifying--

(1) The amount to be withheld;

(2) The specific causes for the withholding under the terms of the subcontract; and

(3) The remedial actions to be taken by the subcontractor in order to receive payment of the amounts withheld.

(h) Subcontractor payment entitlement. The Contractor may not request payment from the Government of any amount withheld or retained in accordance with paragraph (d) of this clause until such time as the Contractor has determined and certified to the Contracting Officer that the subcontractor is entitled to the payment of such amount.

(i) Prime-subcontractor disputes. A dispute between the Contractor and subcontractor relating to the amount or entitlement of a subcontractor to a payment or a late payment interest penalty under a clause included in the subcontract pursuant to paragraph (c) of this clause does not constitute a dispute to which the Government is a party. The Government may not be interpleaded in any judicial or administrative proceeding involving such a dispute.

(j) Preservation of prime-subcontractor rights. Except as provided in paragraph (i) of this clause, this clause shall not limit or impair any contractual, administrative, or judicial remedies otherwise available to the Contractor or a subcontractor in the event of a dispute involving late payment or nonpayment by the Contractor or deficient subcontract performance or nonperformance by a subcontractor.

(k) Non-recourse for prime contractor interest penalty. The Contractor's obligation to pay an interest penalty to a subcontractor pursuant to the clauses included in a subcontract under paragraph (c) of this clause shall not be construed to be an obligation of the Government for such interest penalty. A cost-reimbursement claim may not include any amount for reimbursement of such interest penalty.

(l) Overpayments. If the Contractor becomes aware of a duplicate payment or that the Government has otherwise overpaid on an invoice payment, the Contractor shall immediately notify the Contracting Officer and request instructions for disposition of the overpayment.

(End of clause)

52.232-33 PAYMENT BY ELECTRONIC FUNDS TRANSFER—CENTRAL CONTRACTOR REGISTRATION (MAY 1999)

(a) Method of payment. (1) All payments by the Government under this contract shall be made by electronic funds transfer (EFT), except as provided in paragraph (a)(2) of this clause. As used in this clause, the term “EFT” refers to the funds transfer and may also include the payment information transfer.

(2) In the event the Government is unable to release one or more payments by EFT, the Contractor agrees to either--

(i) Accept payment by check or some other mutually agreeable method of payment; or

(ii) Request the Government to extend the payment due date until such time as the Government can make payment by EFT (but see paragraph (d) of this clause).

(b) Contractor's EFT information. The Government shall make payment to the Contractor using the EFT information contained in the Central Contractor Registration (CCR) database. In the event that the EFT information changes, the Contractor shall be responsible for providing the updated information to the CCR database.

(c) Mechanisms for EFT payment. The Government may make payment by EFT through either the Automated Clearing House (ACH) network, subject to the rules of the National Automated Clearing House Association, or the Fedwire Transfer System. The rules governing Federal payments through the ACH are contained in 31 CFR part 210.

(d) Suspension of payment. If the Contractor's EFT information in the CCR database is incorrect, then the Government need not make payment to the Contractor under this contract until correct EFT information is entered into the CCR database; and any invoice or contract financing request shall be deemed not to be a proper invoice for the purpose of prompt payment under this contract. The prompt payment terms of the contract regarding notice of an improper invoice and delays in accrual of interest penalties apply.

(e) Contractor EFT arrangements. If the Contractor has identified multiple payment receiving points (i.e., more than one remittance address and/or EFT information set) in the CCR database, and the Contractor has not notified the Government of the payment receiving point applicable to this contract, the Government shall make payment to the first payment receiving point (EFT information set or remittance address as applicable) listed in the CCR database.

(f) Liability for uncompleted or erroneous transfers. (1) If an uncompleted or erroneous transfer occurs because the Government used the Contractor's EFT information incorrectly, the Government remains responsible for--

(i) Making a correct payment;

(ii) Paying any prompt payment penalty due; and

(iii) Recovering any erroneously directed funds.

(2) If an uncompleted or erroneous transfer occurs because the Contractor's EFT information was incorrect, or was revised within 30 days of Government release of the EFT payment transaction instruction to the Federal Reserve System, and--

(i) If the funds are no longer under the control of the payment office, the Government is deemed to have made payment and the Contractor is responsible for recovery of any erroneously directed funds; or

(ii) If the funds remain under the control of the payment office, the Government shall not make payment, and the provisions of paragraph (d) of this clause shall apply.

(g) EFT and prompt payment. A payment shall be deemed to have been made in a timely manner in accordance with the prompt payment terms of this contract if, in the EFT payment transaction instruction released to the Federal Reserve System, the date specified for settlement of the payment is on or before the prompt payment due date, provided the specified payment date is a valid date under the rules of the Federal Reserve System.

(h) EFT and assignment of claims. If the Contractor assigns the proceeds of this contract as provided for in the assignment of claims terms of this contract, the Contractor shall require as a condition of any such assignment, that the assignee shall register in the CCR database and shall be paid by EFT in accordance with the terms of this clause. In all respects, the requirements of this clause shall apply to the assignee as if it were the Contractor. EFT information that shows the ultimate recipient of the transfer to be other than the Contractor, in the absence of a proper assignment of claims acceptable to the Government, is incorrect EFT information within the meaning of paragraph (d) of this clause.

(i) Liability for change of EFT information by financial agent. The Government is not liable for errors resulting from changes to EFT information made by the Contractor's financial agent.

(j) Payment information. The payment or disbursing office shall forward to the Contractor available payment information that is suitable for transmission as of the date of release of the EFT instruction to the Federal Reserve System. The Government may request the Contractor to designate a desired format and method(s) for delivery of

payment information from a list of formats and methods the payment office is capable of executing. However, the Government does not guarantee that any particular format or method of delivery is available at any particular payment office and retains the latitude to use the format and delivery method most convenient to the Government. If the Government makes payment by check in accordance with paragraph (a) of this clause, the Government shall mail the payment information to the remittance address contained in the CCR database.

(End of Clause)

52.233-1 DISPUTES. (DEC 1998)

(a) This contract is subject to the Contract Disputes Act of 1978, as amended (41 U.S.C. 601-613).

(b) Except as provided in the Act, all disputes arising under or relating to this contract shall be resolved under this clause.

(c) "Claim," as used in this clause, means a written demand or written assertion by one of the contracting parties seeking, as a matter of right, the payment of money in a sum certain, the adjustment or interpretation of contract terms, or other relief arising under or relating to this contract. A claim arising under a contract, unlike a claim relating to that contract, is a claim that can be resolved under a contract clause that provides for the relief sought by the claimant. However, a written demand or written assertion by the Contractor seeking the payment of money exceeding $100,000 is not a claim under the Act until certified as required by subparagraph (d)(2) of this clause. A voucher, invoice, or other routine request for payment that is not in dispute when submitted is not a claim under the Act. The submission may be converted to a claim under the Act, by complying with the submission and certification requirements of this clause, if it is disputed either as to liability or amount or is not acted upon in a reasonable time.

(d)(1) A claim by the Contractor shall be made in writing and, unless otherwise stated in this contract, submitted within 6 years after accrual of the claim to the Contracting Officer for a written decision. A claim by the Government against the Contractor shall be subject to a written decision by the Contracting Officer.

(2)(i) The contractors shall provide the certification specified in subparagraph (d)(2)(iii) of this clause when submitting any claim -

(A) Exceeding $100,000; or

(B) Regardless of the amount claimed, when using -

(1) Arbitration conducted pursuant to 5 U.S.C. 575-580; or

(2) Any other alternative means of dispute resolution (ADR) technique that the agency elects to handle in accordance with the Administrative Dispute Resolution Act (ADRA).

(ii) The certification requirement does not apply to issues in controversy that have not been submitted as all or part of a claim.

(iii) The certification shall state as follows: "I certify that the claim is made in good faith; that the supporting data are accurate and complete to the best of my knowledge and belief; that the amount requested accurately reflects the contract adjustment for which the Contractor believes the Government is liable; and that I am duly authorized to certify the claim on behalf of the Contractor.

(3) The certification may be executed by any person duly authorized to bind the Contractor with respect to the claim.

(e) For Contractor claims of $100,000 or less, the Contracting Officer must, if requested in writing by the Contractor,

render a decision within 60 days of the request. For Contractor-certified claims over $100,000, the Contracting Officer must, within 60 days, decide the claim or notify the Contractor of the date by which the decision will be made.

(f) The Contracting Officer's decision shall be final unless the Contractor appeals or files a suit as provided in the Act.

(g) If the claim by the Contractor is submitted to the Contracting Officer or a claim by the Government is presented to the Contractor, the parties, by mutual consent, may agree to use alternative disput resolution (ADR). If the Contractor refuses an offer for ADR, the Contractor shall inform the Contracting Officer, in writing, of the Contractor's specific reasons for rejecting the request.

(h) The Government shall pay interest on the amount found due and unpaid from (1) the date the Contracting Officer receives the claim (certified, if required); or (2) the date that payment otherwise would be due, if that date is later, until the date of payment. With regard to claims having defective certifications, as defined in (FAR) 48 CFR 33.201, interest shall be paid from the date that the Contracting Officer initially receives the claim. Simple interest on claims shall be paid at the rate, fixed by the Secretary of the Treasury as provided in the Act, which is applicable to the period during which the Contracting Officer receives the claim and then at the rate applicable for each 6-month period as fixed by the Treasury Secretary during the pendency of the claim.

(i) The Contractor shall proceed diligently with performance of this contract, pending final resolution of any request for relief, claim, appeal, or action arising under the contract, and comply with any decision of the Contracting Officer.

(End of clause)

52.233-3 PROTEST AFTER AWARD (AUG. 1996)

(a) Upon receipt of a notice of protest (as defined in FAR 33.101) or a determination that a protest is likely (see FAR 33.102(d)), the Contracting Officer may, by written order to the Contractor, direct the Contractor to stop performance of the work called for by this contract. The order shall be specifically identified as a stop-work order issued under this clause. Upon receipt of the order, the Contractor shall immediately comply with its terms and take all reasonable steps to minimize the incurrence of costs allocable to the work covered by the order during the period of work stoppage. Upon receipt of the final decision in the protest, the Contracting Officer shall either--

(1) Cancel the stop-work order; or

(2) Terminate the work covered by the order as provided in the Default, or the Termination for Convenience of the Government, clause of this contract.

(b) If a stop-work order issued under this clause is canceled either before or after a final decision in the protest, the Contractor shall resume work. The Contracting Officer shall make an equitable adjustment in the delivery schedule or contract price, or both, and the contract shall be modified, in writing, accordingly, if--

(1) The stop-work order results in an increase in the time required for, or in the Contractor's cost properly allocable to, the performance of any part of this contract; and

(2) The Contractor asserts its right to an adjustment within 30 days after the end of the period of work stoppage; provided, that if the Contracting Officer decides the facts justify the action, the Contracting Officer may receive and act upon a proposal at any time before final payment under this contract.

(c) If a stop-work order is not canceled and the work covered by the order is terminated for the convenience of the Government, the Contracting Officer shall allow reasonable costs resulting from the stop-work order in arriving at

the termination settlement.

(d) If a stop-work order is not canceled and the work covered by the order is terminated for default, the Contracting Officer shall allow, by equitable adjustment or otherwise, reasonable costs resulting from the stop-work order.

(e) The Government's rights to terminate this contract at any time are not affected by action taken under this clause.

(f) If, as the result of the Contractor's intentional or negligent misstatement, misrepresentation, or miscertification, a protest related to this contract is sustained, and the Government pays costs, as provided in FAR 33.102(b)(2) or 33.104(h)(1), the Government may require the Contractor to reimburse the Government the amount of such costs. In addition to any other remedy available, and pursuant to the requirements of Subpart 32.6, the Government may collect this debt by offsetting the amount against any payment due the Contractor under any contract between the Contractor and the Government.

(End of clause)

52.236-2 DIFFERING SITE CONDITIONS (APR 1984)

As prescribed in 36.502, insert the following clause in solicitations and contracts when a fixed-price construction contract or a fixed-price dismantling, demolition, or removal of improvements contract is contemplated and the contract amount is expected to exceed the small purchase limitation. The Contracting Officer may insert the clause in solicitations and contracts when a fixed-price construction or a fixed-price contract for dismantling, demolition, or removal of improvements is contemplated and the contract amount is expected to be within the small purchase limitation.

(a) The Contractor shall promptly, and before the conditions are disturbed, give a written notice to the Contracting Officer of

(1) subsurface or latent physical conditions at the site which differ materially from those indicated in this contract, or

(2) unknown physical conditions at the site, of an unusual nature, which differ materially from those ordinarily encountered and generally recognized as inhering in work of the character provided for in the contract.

(b) The Contracting Officer shall investigate the site conditions promptly after receiving the notice. If the conditions do materially so differ and cause an increase or decrease in the Contractor's cost of, or the time required for, performing any part of the work under this contract, whether or not changed as a result of the conditions, an equitable adjustment shall be made under this clause and the contract modified in writing accordingly.

(c) No request by the Contractor for an equitable adjustment to the contract under this clause shall be allowed, unless the Contractor has given the written notice required; provided, that the time prescribed in (a) above for giving written notice may be extended by the Contracting Officer.

(d) No request by the Contractor for an equitable adjustment to the contract for differing site conditions shall be allowed if made after final payment under this contract.

(End of clause)

52.236-3 SITE INVESTIGATION AND CONDITIONS AFFECTING THE WORK (APR 1984)

(a) The Contractor acknowledges that it has taken steps reasonably necessary to ascertain the nature and location of the work, and that it has investigated and satisfied itself as to the general and local conditions which can affect the work or its cost, including but not limited to

(1) conditions bearing upon transportation, disposal, handling, and storage of materials;

(2) the availability of labor, water, electric power, and roads;

(3) uncertainties of weather, river stages, tides, or similar physical conditions at the site;

(4) the conformation and conditions of the ground; and (5) the character of equipment and facilities needed preliminary to and during work performance. The Contractor also acknowledges that it has satisfied itself as to the character, quality, and quantity of surface and subsurface materials or obstacles to be encountered insofar as this information is reasonably ascertainable from an inspection of the site, including all exploratory work done by the Government, as well as from the drawings and specifications made a part of this contract. Any failure of the Contractor to take the actions described and acknowledged in this paragraph will not relieve the Contractor from responsibility for estimating properly the difficulty and cost of successfully performing the work, or for proceeding to successfully perform the work without additional expense to the Government.

(b) The Government assumes no responsibility for any conclusions or interpretations made by the Contractor based on the information made available by the Government. Nor does the Government assume responsibility for any understanding reached or representation made concerning conditions which can affect the work by any of its officers or agents before the execution of this contract, unless that understanding or representation is expressly stated in this contract.

(End of clause)

52.236-5 MATERIAL AND WORKMANSHIP (APR 1984)

(a) All equipment, material, and articles incorporated into the work covered by this contract shall be new and of the most suitable grade for the purpose intended, unless otherwise specifically provided in this contract. References in the specifications to equipment, material, articles, or patented processes by trade name, make, or catalog number, shall be regarded as establishing a standard of quality and shall not be construed as limiting competition. The Contractor may, at its option, use any equipment, material, article, or process that, in the judgment of the Contracting Officer, is equal to that named in the specifications, unless otherwise specifically provided in this contract.

(b) The Contractor shall obtain the Contracting Officer's approval of the machinery and mechanical and other equipment to be incorporated into the work. When requesting approval, the Contractor shall furnish to the Contracting Officer the name of the manufacturer, the model number, and other information concerning the performance, capacity, nature, and rating of the machinery and mechanical and other equipment. When required by this contract or by the Contracting Officer, the Contractor shall also obtain the Contracting Officer's approval of the material or articles which the Contractor contemplates incorporating into the work. When requesting approval, the Contractor shall provide full information concerning the material or articles. When directed to do so, the Contractor shall submit samples for approval at the Contractor's expense, with all shipping charges prepaid. Machinery, equipment, material, and articles that do not have the required approval shall be installed or used at the risk of subsequent rejection.

(c) All work under this contract shall be performed in a skillful and workmanlike manner. The Contracting Officer may require, in writing, that the Contractor remove from the work any employee the Contracting Officer deems incompetent, careless, or otherwise objectionable.

(End of clause)

52.236-6 SUPERINTENDENCE BY THE CONTRACTOR (APR 1984)

At all times during performance of this contract and until the work is completed and accepted, the Contractor shall directly superintend the work or assign and have on the worksite a competent superintendent who is satisfactory to the Contracting Officer and has authority to act for the Contractor.

(End of clause)

52.236-7 PERMITS AND RESPONSIBILITIES (NOV 1991)

The Contractor shall, without additional expense to the Government, be responsible for obtaining any necessary licenses and permits, and for complying with any Federal, State, and municipal laws, codes, and regulations applicable to the performance of the work. The Contractor shall also be responsible for all damages to persons or property that occur as a result of the Contractor's fault or negligence. The Contractor shall also be responsible for all materials delivered and work performed until completion and acceptance of the entire work, except for any completed unit of work which may have been accepted under the contract.

(End of clause)

52.236-8 OTHER CONTRACTS (APR 1984)

The Government may undertake or award other contracts for additional work at or near the site of the work under this contract. The Contractor shall fully cooperate with the other contractors and with Government employees and shall carefully adapt scheduling and performing the work under this contract to accommodate the additional work, heeding any direction that may be provided by the Contracting Officer. The Contractor shall not commit or permit any act that will interfere with the performance of work by any other contractor or by Government employees.

(End of clause)

52.236-9 PROTECTION OF EXISTING VEGETATION, STRUCTURES, EQUIPMENT, UTILITIES, AND IMPROVEMENTS (APR 1984)

(a) The Contractor shall preserve and protect all structures, equipment, and vegetation (such as trees, shrubs, and grass) on or adjacent to the work site, which are not to be removed and which do not unreasonably interfere with the work required under this contract. The Contractor shall only remove trees when specifically authorized to do so, and shall avoid damaging vegetation that will remain in place. If any limbs or branches of trees are broken during contract performance, or by the careless operation of equipment, or by workmen, the Contractor shall trim those limbs or branches with a clean cut and paint the cut with a tree-pruning compound as directed by the Contracting Officer.

(b) The Contractor shall protect from damage all existing improvements and utilities

(1) at or near the work site, and

(2) on adjacent property of a third party, the locations of which are made known to or should be known by the Contractor. The Contractor shall repair any damage to those facilities, including those that are the property of a third party, resulting from failure to comply with the requirements of this contract or failure to exercise reasonable care in performing the work. If the Contractor fails or refuses to repair the damage promptly, the Contracting Officer may have the necessary work performed and charge the cost to the Contractor.

(End of clause)

52.236-10 OPERATIONS AND STORAGE AREAS (APR 1984)

(a) The Contractor shall confine all operations (including storage of materials) on Government premises to areas authorized or approved by the Contracting Officer. The Contractor shall hold and save the Government, its officers and agents, free and harmless from liability of any nature occasioned by the Contractor's performance.

(b) Temporary buildings (e.g., storage sheds, shops, offices) and utilities may be erected by the Contractor only with the approval of the Contracting Officer and shall be built with labor and materials furnished by the Contractor without expense to the Government. The temporary buildings and utilities shall remain the property of the Contractor and shall be removed by the Contractor at its expense upon completion of the work. With the written consent of the Contracting Officer, the buildings and utilities may be abandoned and need not be removed.

(c) The Contractor shall, under regulations prescribed by the Contracting Officer, use only established roadways, or use temporary roadways constructed by the Contractor when and as authorized by the Contracting Officer. When materials are transported in prosecuting the work, vehicles shall not be loaded beyond the loading capacity recommended by the manufacturer of the vehicle or prescribed by any Federal, State, or local law or regulation. When it is necessary to cross curbs or sidewalks, the Contractor shall protect them from damage. The Contractor shall repair or pay for the repair of any damaged curbs, sidewalks, or roads.

(End of clause)

52.236-11 USE AND POSSESSION PRIOR TO COMPLETION (APR 1984)

(a) The Government shall have the right to take possession of or use any completed or partially completed part of the work. Before taking possession of or using any work, the Contracting Officer shall furnish the Contractor a list of items of work remaining to be performed or corrected on those portions of the work that the Government intends to take possession of or use. However, failure of the Contracting Officer to list any item of work shall not relieve the Contractor of responsibility for complying with the terms of the contract. The Government's possession or use shall not be deemed an acceptance of any work under the contract.

(b) While the Government has such possession or use, the Contractor shall be relieved of the responsibility for the loss of or damage to the work resulting from the Government's possession or use, notwithstanding the terms of the clause in this contract entitled "Permits and Responsibilities." If prior possession or use by the Government delays the progress of the work or causes additional expense to the Contractor, an equitable adjustment shall be made in the contract price or the time of completion, and the contract shall be modified in writing accordingly.

(End of clause)

52.236-12 CLEANING UP (APR 1984)

The Contractor shall at all times keep the work area, including storage areas, free from accumulations of waste materials. Before completing the work, the Contractor shall remove from the work and premises any rubbish, tools, scaffolding, equipment, and materials that are not the property of the Government. Upon completing the work, the Contractor shall leave the work area in a clean, neat, and orderly condition satisfactory to the Contracting Officer.

(End of clause)

52.236-13 ACCIDENT PREVENTION (NOV 1991) – ALTERNATE I (NOV 1991)

(a) The Contractor shall provide and maintain work environments and procedures which will

(1) safeguard the public and Government personnel, property, materials, supplies, and equipment exposed to Contractor operations and activities;

(2) avoid interruptions of Government operations and delays in project completion dates; and

(3) control costs in the performance of this contract.

(b) For these purposes on contracts for construction or dismantling, demolition, or removal of improvements, the Contractor shall-

(1) Provide appropriate safety barricades, signs, and signal lights;

(2) Comply with the standards issued by the Secretary of Labor at 29 CFR Part 1926 and 29 CFR Part 1910; and

(3) Ensure that any additional measures the Contracting Officer determines to be reasonably necessary for the purposes are taken.

(x) If this contract is for construction or dismantling, demolition or removal of improvements with any Department of Defense agency or component, the Contractor shall comply with all pertinent provisions of the latest version of U.S. Army Corps of Engineers Safety and Health Requirements Manual, EM 385-1-1, in effect on the date of the solicitation.

(ii) Whenever the Contracting Officer becomes aware of any noncompliance with these requirements or any condition which poses a serious or imminent danger to the health or safety of the public or Government personnel, the Contracting Officer shall notify the Contractor orally, with written confirmation, and request immediate initiation of corrective action. This notice, when delivered to the Contractor or the Contractor's representative at the work site, shall be deemed sufficient notice of the noncompliance and that corrective action is required. After receiving the notice, the Contractor shall immediately take corrective action. If the Contractor fails or refuses to promptly take corrective action, the Contracting Officer may issue an order stopping all or part of the work until satisfactory corrective action has been taken. The Contractor shall not be entitled to any equitable adjustment of the contract price or extension of the performance schedule on any stop work order issued under this clause.

(e) The Contractor shall insert this clause, including this paragraph (e), with appropriate changes in the designation of the parties, in subcontracts.

(f) Before commencing the work, the Contractor shall-

(1) Submit a written proposed plan for implementing this clause. The plan shall include an analysis of the significant hazards to life, limb, and property inherent in contract work performance and a plan for controlling these hazards; and

(2) Meet with representatives of the Contracting Officer to discuss and develop a mutual understanding relative to administration of the overall safety program.

(End of clause)

52.236-15 SCHEDULES FOR CONSTRUCTION CONTRACTS (APR 1984)

(a) The Contractor shall, within five days after the work commences on the contract or another period of time determined by the Contracting Officer, prepare and submit to the Contracting Officer for approval three copies of a practicable schedule showing the order in which the Contractor proposes to perform the work, and the dates on which the Contractor contemplates starting and completing the several salient features of the work (including acquiring materials, plant, and equipment). The schedule shall be in the form of a progress chart of suitable scale to

indicate appropriately the percentage of work scheduled for completion by any given date during the period. If the Contractor fails to submit a schedule within the time prescribed, the Contracting Officer may withhold approval of progress payments until the Contractor submits the required schedule.

(b) The Contractor shall enter the actual progress on the chart as directed by the Contracting Officer, and upon doing so shall immediately deliver three copies of the annotated schedule to the Contracting Officer. If, in the opinion of the Contracting Officer, the Contractor falls behind the approved schedule, the Contractor shall take steps necessary to improve its progress, including those that may be required by the Contracting Officer, without additional cost to the Government. In this circumstance, the Contracting Officer may require the Contractor to increase the number of shifts, overtime operations, days of work, and/or the amount of construction plant, and to submit for approval any supplementary schedule or schedules in chart form as the Contracting Officer deems necessary to demonstrate how the approved rate of progress will be regained.

(c) Failure of the Contractor to comply with the requirements of the Contracting Officer under this clause shall be grounds for a determination by the Contracting Officer that the Contractor is not prosecuting the work with sufficient diligence to ensure completion within the time specified in the contract. Upon making this determination, the Contracting Officer may terminate the Contractor's right to proceed with the work, or any separable part of it, in accordance with the default terms of this contract.

(End of clause)

52.236-17 LAYOUT OF WORK (APR 1984)

The Contractor shall lay out its work from Government established base lines and bench marks indicated on the drawings, and shall be responsible for all measurements in connection with the layout. The Contractor shall furnish, at its own expense, all stakes, templates, platforms, equipment, tools, materials, and labor required to lay out any part of the work. The Contractor shall be responsible for executing the work to the lines and grades that may be established or indicated by the Contracting Officer. The Contractor shall also be responsible for maintaining and preserving all stakes and other marks established by the Contracting Officer until authorized to remove them. If such marks are destroyed by the Contractor or through its negligence before their removal is authorized, the Contracting Officer may replace them and deduct the expense of the replacement from any amounts due or to become due to the Contractor.

(End of clause)

52.236-21 SPECIFICATIONS AND DRAWINGS FOR CONSTRUCTION (FEB 1997)

(a) The Contractor shall keep on the work site a copy of the drawings and specifications and shall at all times give the Contracting Officer access thereto. Anything mentioned in the specifications and not shown on the drawings, or shown on the drawings and not mentioned in the specifications, shall be of like effect as if shown or mentioned in both. In case of difference between drawings and specifications, the specifications shall govern. In case of discrepancy in the figures, in the drawings, or in the specifications, the matter shall be promptly submitted to the Contracting Officer, who shall promptly make a determination in writing. Any adjustment by the Contractor without such a determination shall be at its own risk and expense. The Contracting Officer shall furnish from time to time such detailed drawings and other information as considered necessary, unless otherwise provided.

(b) Wherever in the specifications or upon the drawings the words "directed", "required", "ordered", "designated", "prescribed", or words of like import are used, it shall be understood that the "direction", "requirement", "order", "designation", or "prescription", of the Contracting Officer is intended and similarly the words "approved", "acceptable", "satisfactory", or words of like import shall mean "approved by," or "acceptable to", or "satisfactory to" the Contracting Officer, unless otherwise expressly stated.

(c) Where "as shown," as indicated", "as detailed", or words of similar import are used, it shall be understood that the reference is made to the drawings accompanying this contract unless stated otherwise. The word "provided" as used herein shall be understood to mean "provide complete in place," that is "furnished and installed".

(d) Shop drawings means drawings, submitted to the Government by the Contractor, subcontractor, or any lower tier subcontractor pursuant to a construction contract, showing in detail (1) the proposed fabrication and assembly of structural elements, and (2) the installation (i.e., fit, and attachment details) of materials or equipment. It includes drawings, diagrams, layouts, schematics, descriptive literature, illustrations, schedules, performance and test data, and similar materials furnished by the contractor to explain in detail specific portions of the work required by the contract. The Government may duplicate, use, and disclose in any manner and for any purpose shop drawings delivered under this contract.

(e) If this contract requires shop drawings, the Contractor shall coordinate all such drawings, and review them for accuracy, completeness, and compliance with contract requirements and shall indicate its approval thereon as evidence of such coordination and review. Shop drawings submitted to the Contracting Officer without evidence of the Contractor's approval may be returned for resubmission. The Contracting Officer will indicate an approval or disapproval of the shop drawings and if not approved as submitted shall indicate the Government's reasons therefor. Any work done before such approval shall be at the Contractor's risk. Approval by the Contracting Officer shall not relieve the Contractor from responsibility for any errors or omissions in such drawings, nor from responsibility for complying with the requirements of this contract, except with respect to variations described and approved in accordance with (f) below.

(f) If shop drawings show variations from the contract requirements, the Contractor shall describe such variations in writing, separate from the drawings, at the time of submission. If the Contracting Officer approves any such variation, the Contracting Officer shall issue an appropriate contract modification, except that, if the variation is minor or does not involve a change in price or in time of performance, a modification need not be issued.

(g) The Contractor shall submit to the Contracting Officer for approval four copies (unless otherwise indicated) of all shop drawings as called for under the various headings of these specifications. Three sets (unless otherwise indicated) of all shop drawings, will be retained by the Contracting Officer and one set will be returned to the Contractor.

(End of clause)

52.236-22 DESIGN WITHIN FUNDING LIMITATIONS (APR 1984)

(a) The Contractor shall accomplish the design services required under this contract so as to permit the award of a contract, using standard Federal Acquisition Regulation procedures for the construction of the facilities designed at a price that does not exceed the estimated construction contract price as set forth in paragraph (c) below. When bids or proposals for the construction contract are received that exceed the estimated price, the contractor shall perform such redesign and other services as are necessary to permit contract award within the funding limitation. These additional services shall be performed at no increase in the price of this contract. However, the Contractor shall not be required to perform such additional services at no cost to the Government if the unfavorable bids or proposals are the result of conditions beyond its reasonable control.

(b) The Contractor will promptly advise the Contracting Officer if it finds that the project being designed will exceed or is likely to exceed the funding limitations and it is unable to design a usable facility within these limitations. Upon receipt of such information, the Contracting Officer will review the Contractor's revised estimate of construction cost. The Government may, if it determines that the estimated construction contract price set forth in this contract is so low that award of a construction contract not in excess of such estimate is improbable, authorize a change in scope or materials as required to reduce the estimated construction cost to an amount within the estimated construction contract price set forth in paragraph (c) below, or the Government may adjust such estimated construction contract price. When bids or proposals are not solicited or are unreasonably delayed, the Government shall prepare an

estimate of constructing the design submitted and such estimate shall be used in lieu of bids or proposals to determine compliance with the funding limitation.

(c) The estimated construction contract price for the project described in this contract is $ 5,235,000.00

(End of clause)

52.236-24 WORK OVERSIGHT IN ARCHITECT-ENGINEER CONTRACTS (APR 1984)

The extent and character of the work to be done by the Contractor shall be subject to the general oversight, supervision, direction, control, and approval of the Contracting Officer.

(End of clause)

52.236-25 REQUIREMENTS FOR REGISTRATION OF DESIGNERS (APR 1984)

The design of architectural, structural, mechanical, electrical, civil, or other engineering features of the work shall be accomplished or reviewed and approved by architects or engineers registered to practice in the particular professional field involved in a State or possession of the United States, in Puerto Rico, or in the District of Columbia.

(End of clause)

52.236-26 PRECONSTRUCTION CONFERENCE (FEB 1995)

If the Contracting Officer decides to conduct a preconstruction conference, the successful offeror will be notified and will be required to attend. The Contracting Officer's notification will include specific details regarding the date, time, and location of the conference, any need for attendance by subcontractors, and information regarding the items to be discussed.

(End of clause)

52.239-4001 Year 2000 Compliance

The contractor shall ensure products provided under this contract, to include hardware, software, firmware, and middleware, whether acting alone or combined as a system, are Year 2000 compliant as defined as follows: Year 2000 compliant means with respect to information technology, that the information technology accurately processes date/time data (including, but not limited to, calculating, comparing, and sequencing) from, into, and between the twentieth and twenty-first centuries, and the years 1999 and 2000 and leap year calculations, to the extent that other information, used in combination with the information technology being acquired, properly exchanges date/time data with it.

52.239-4005 Year 2000 Compliance - Construction Contracts

a. In accordance with FAR 39.106, the contractor shall ensure that with respect to any design, construction, goods, or services under this contract as well as any subsequent task/delivery orders issued under this contract (if applicable), all information technology contained therein shall be Year 2000 compliant. Specifically:

The contractor shall:

(1) Perform, maintain, and provide an inventory of all major components to include structures, equipment, items, parts, and furnishings under this contract and each task/delivery order which may be affected by the Y2K compliance requirement.

(2) Indicate whether each component is currently Year 2000 compliant or requires an upgrade for compliance prior to government acceptance.

(End of Clause)

52.242-13 BANKRUPTCY (JUL 1995)

In the event the Contractor enters into proceedings relating to bankruptcy, whether voluntary or involuntary, the Contractor agrees to furnish, by certified mail or electronic commerce method authorized by the contract, written notification of the bankruptcy to the Contracting Officer responsible for administering the contract. This notification shall be furnished within five days of the initiation of the proceedings relating to bankruptcy filing. This notification shall include the date on which the bankruptcy petition was filed, the identity of the court in which the bankruptcy petition was filed, and a listing of Government contract numbers and contracting offices for all Government contracts against which final payment has not been made. This obligation remains in effect until final payment under this contract.

(End of clause)

52.242-14 SUSPENSION OF WORK (APR 1984)

(a) The Contracting Officer may order the Contractor, in writing, to suspend, delay, or interrupt all or any part of the work of this contract for the period of time that the Contracting Officer determines appropriate for the convenience of the Government.

(b) If the performance of all or any part of the work is, for an unreasonable period of time, suspended, delayed, or interrupted (1) by an act of the Contracting Officer in the administration of this contract, or (2) by the Contracting Officer's failure to act within the time specified in this contract (or within a reasonable time if not specified), an adjustment shall be made for any increase in the cost of performance of this contract (excluding profit) necessarily caused by the unreasonable suspension, delay, or interruption, and the contract modified in writing accordingly. However, no adjustment shall be made under this clause for any suspension, delay, or interruption to the extent that performance would have been so suspended, delayed, or interrupted by any other cause, including the fault or negligence of the Contractor, or for which an equitable adjustment is provided for or excluded under any other term or condition of this contract. (c) A claim under this clause shall not be allowed (1) for any costs incurred more than 20 days before the Contractor shall have notified the Contracting Officer in writing of the act or failure to act involved (but this requirement shall not apply as to a claim resulting from a suspension order), and (2) unless the claim, in an amount stated, is asserted in writing as soon as practicable after the termination of the suspension, delay,

or interruption, but not later than the date of final payment under the contract.

(End of clause)

52.243-1 CHANGES--FIXED-PRICE (AUG 1987) - ALTERNATE III (APR 1984)

(a) The Contracting Officer may at any time, by written order, and without notice to the sureties, if any, make changes within the general scope of this contract in the services to be performed.

(b) If any such change causes an increase or decrease in the cost of, or the time required for, performance of any part of the work under this contract, whether or not changed by the order, the Contracting Officer shall make an equitable adjustment in the contract price, the delivery schedule, or both, and shall modify the contract.

(c) The Contractor must assert its right to an adjustment under this clause within 30 days from the date of receipt of the written order. However, if the Contracting Officer decides that the facts justify it, the Contracting Officer may receive and act upon a proposal submitted before final payment of the contract.

(d) If the Contractor's proposal includes the cost of property made obsolete or excess by the change, the Contracting Officer shall have the right to prescribe the manner of the disposition of the property.

(e) Failure to agree to any adjustment shall be a dispute under the Disputes clause. However, nothing in this clause shall excuse the Contractor from proceeding with the contract as changed.

(f) No services for which an additional cost or fee will be charged by the Contractor shall be furnished without the prior written authorization of the Contracting Officer.

(End of clause)

52.243-4 CHANGES (AUG 1987)

(a) The Contracting Officer may, at any time, without notice to the sureties, if any, by written order designated or indicated to be a change order, make changes in the work within the general scope of the contract, including changes--

(1) In the specifications (including drawings and designs);

(2) In the method or manner of performance of the work;

(3) In the Government-furnished facilities, equipment, materials, services, or site; or

(4) Directing acceleration in the performance of the work.

(b) Any other written or oral order (which, as used in this paragraph (b), includes direction, instruction, interpretation, or determination) from the Contracting Officer that causes a change shall be treated as a change order under this clause; provided, that the Contractor gives the Contracting Officer written notice stating

(1) the date, circumstances, and source of the order and

(2) that the Contractor regards the order as a change order.

(c) Except as provided in this clause, no order, statement, or conduct of the Contracting Officer shall be treated as a change under this clause or entitle the Contractor to an equitable adjustment.

(d) If any change under this clause causes an increase or decrease in the Contractor's cost of, or the time required for, the performance of any part of the work under this contract, whether or not changed by any such order, the Contracting Officer shall make an equitable adjustment and modify the contract in writing. However, except for an adjustment based on defective specifications, no adjustment for any change under paragraph (b) of this clause shall be made for any costs incurred more than 20 days before the Contractor gives written notice as required. In the case of defective specifications for which the Government is responsible, the equitable adjustment shall include any increased cost reasonably incurred by the Contractor in attempting to comply with the defective specifications.

(e) The Contractor must assert its right to an adjustment under this clause within 30 days after

(1) receipt of a written change order under paragraph (a) of this clause or (2) the furnishing of a written notice under paragraph (b) of this clause, by submitting to the Contracting Officer a written statement describing the general nature and amount of the proposal, unless this period is extended by the Government. The statement of proposal for adjustment may be included in the notice under paragraph (b) above.

(f) No proposal by the Contractor for an equitable adjustment shall be allowed if asserted after final payment under this contract.

(End of clause)

52.244-5 COMPETITION IN SUBCONTRACTING (DEC 1996)

(a) The Contractor shall select subcontractors (including suppliers) on a competitive basis to the maximum practical extent consistent with the objectives and requirements of the contract.

(b) If the Contractor is an approved mentor under the Department of Defense Pilot Mentor-Protege Program (Pub. L. 101–510, section 831 as amended), the Contractor may award subcontracts under this contract on a noncompetitive basis to its proteges.

(End of clause)

52.244-6 SUBCONTRACTS FOR COMMERCIAL ITEMS (MAY 2002)

(a) Definitions. As used this clause--

"Commercial item", has the meaning contained in the clause at 52.202-1, Definitions.

"Subcontract", includes a transfer of commercial items between divisions, subsidiaries, or affiliates of the Contractor or subcontractor at any tier.

(b) To the maximum extent practicable, the Contractor shall incorporate, and require its subcontractors at all tiers to incorporate, commercial items or nondevelopmental items as components of items to be supplied under this contract.

(c)(1) The Contractor shall insert the following clauses in subcontracts for commercial items:

(i) 52.219-8, Utilization of Small Business Concerns (OCT 2000) (15 U.S.C. 637(d)(2) and (3)), in all subcontracts that offer further subcontracting opportunities. If the subcontract (except subcontracts to small business concerns) exceeds $500,000 ($1,000,000 for construction of any public facility), the subcontractor must include 52.219-8 in lower tier subcontracts that offer subcontracting opportunities.

(ii) 52.222-26, Equal Opportunity (APR 2002) (E.O. 11246).

(iii) 52.222-35, Equal Opportunity for Special Disabled Veterans, Veterans of the Vietnam Era and Other Eligible Veterans (DEC 2001) (38 U.S.C. 4212(a)).

(iv) 52.222-36, Affirmative Action for Workers with Disabilities (JUN 1998) (29 U.S.C. 793).

(v) 52.247-64, Preference for Privately Owned U.S.-Flag Commercial Vessels (JUN 2000) (46 U.S.C. Appx 1241) (flowdown not required for subcontracts awarded beginning May 1, 1996).

(2) While not required, the Contractor may flow down to subcontracts for commercial items a minimal number of additional clauses necessary to satisfy its contractual obligations.

(d) The Contractor shall include the terms of this clause, including this paragraph (d), in subcontracts awarded under this contract.

(End of clause)

52.249-2 TERMINATION FOR CONVENIENCE OF THE GOVERNMENT (FIXED-PRICE) (SEP 1996) - ALTERNATE I (SEP 1996)

(a) The Government may terminate performance of work under this contract in whole or, from time to time, in part if the Contracting Officer determines that a termination is in the Government's interest. The Contracting Officer shall terminate by delivering to the Contractor a Notice of Termination specifying the extent of termination and the effective date.

(b) After receipt of a Notice of Termination, and except as directed by the Contracting Officer, the Contractor shall immediately proceed with the following obligations, regardless of any delay in determining or adjusting any amounts due under this clause:

(1) Stop work as specified in the notice.

(2) Place no further subcontracts or orders (referred to as subcontracts in this clause) for materials, services, or facilities, except as necessary to complete the continued portion of the contract.

(3) Terminate all subcontracts to the extent they relate to the work terminated.

(4) Assign to the Government, as directed by the Contracting Officer, all right, title, and interest of the Contractor under the subcontracts terminated, in which case the Government shall have the right to settle or to pay any termination settlement proposal arising out of those terminations.

(5) With approval or ratification to the extent required by the Contracting Officer, settle all outstanding liabilities and termination settlement proposals arising from the termination of subcontracts; the approval or ratification will be final for purposes of this clause.

(6) As directed by the Contracting Officer, transfer title and deliver to the Government (i) the fabricated or unfabricated parts, work in process, completed work, supplies, and other material produced or acquired for the work terminated, and (ii) the completed or partially completed plans, drawings, information, and other property that, if the contract had been completed, would be required to be furnished to the Government.

(7) Complete performance of the work not terminated.

(8) Take any action that may be necessary, or that the Contracting Officer may direct, for the protection and preservation of the property related to this contract that is in the possession of the Contractor and in which the Government has or may acquire an interest.

(9) Use its best efforts to sell, as directed or authorized by the Contracting Officer, any property of the types referred to in subparagraph (b)(6) of this clause; provided, however, that the Contractor (i) is not required to extend credit to any purchaser and (ii) may acquire the property under the conditions prescribed by, and at prices approved by, the Contracting Officer. The proceeds of any transfer or disposition will be applied to reduce any payments to be made by the Government under this contract, credited to the price or cost of the work, or paid in any other manner directed by the Contracting Officer.

(c) The Contractor shall submit complete termination inventory schedules no later than 120 days from the effective date of termination, unless extended in writing by the Contracting Officer upon written request of the Contractor within this 120-day period.

(d) After expiration of the plant clearance period as defined in Subpart 45.6 of the Federal Acquisition Regulation, the Contractor may submit to the Contracting Officer a list, certified as to quantity and quality, of termination inventory not previously disposed of, excluding items authorized for disposition by the Contracting Officer. The Contractor may request the Government to remove those items or enter into an agreement for their storage. Within 15 days, the Government will accept title to those items and remove them or enter into a storage agreement. The Contracting Officer may verify the list upon removal of the items, or if stored, within 45 days from submission of the list, and shall correct the list, as necessary, before final settlement.

(e) After termination, the Contractor shall submit a final termination settlement proposal to the Contracting Officer in the form and with the certification prescribed by the Contracting Officer. The Contractor shall submit the proposal promptly, but no later than 1 year from the effective date of termination, unless extended in writing by the Contracting Officer upon written request of the Contractor within this 1-year period. However, if the Contracting Officer determines that the facts justify it, a termination settlement proposal may be received and acted on after 1 year or any extension. If the Contractor fails to submit the proposal within the time allowed, the Contracting Officer may determine, on the basis of information available, the amount, if any, due the Contractor because of the termination and shall pay the amount determined.

(f) Subject to paragraph (e) of this clause, the Contractor and the Contracting Officer may agree upon the whole or any part of the amount to be paid or remaining to be paid because of the termination. The amount may include a reasonable allowance for profit on work done. However, the agreed amount, whether under this paragraph (g) or paragraph (g) of this clause, exclusive of costs shown in subparagraph (g)(3) of this clause, may not exceed the total contract price as reduced by (1) the amount of payments previously made and (2) the contract price of work not terminated. The contract shall be modified, and the Contractor paid the agreed amount. Paragraph (g) of this clause shall not limit, restrict, or affect the amount that may be agreed upon to be paid under this paragraph.

(g) If the Contractor and Contracting Officer fail to agree on the whole amount to be paid the Contractor because of the termination of work, the Contracting Officer shall pay the Contractor the amounts determined as follows, but without duplication of any amounts agreed upon under paragraph (f) of this clause:

(1) For contract work performed before the effective date of termination, the total (without duplication of any items) of--

(i) The cost of this work;

(ii) The cost of settling and paying termination settlement proposals under terminated subcontracts that are properly chargeable to the terminated portion of the contract if not included in subdivision (g)(1)(i) of this clause; and

(iii) A sum, as profit on subdivision (g)(1)(i) of this clause, determined by the Contracting Officer under 49.202 of the Federal Acquisition Regulation, in effect on the date of this contract, to be fair and reasonable; however, if it

appears that the Contractor would have sustained a loss on the entire contract had it been completed, the Contracting Officer shall allow no profit under this subdivision (iii) and shall reduce the settlement to reflect the indicated rate of loss.

(2) The reasonable costs of settlement of the work terminated, including--

(i) Accounting, legal, clerical, and other expenses reasonably necessary for the preparation of termination settlement proposals and supporting data;

(ii) The termination and settlement of subcontracts (excluding the amounts of such settlements); and

(iii) Storage, transportation, and other costs incurred, reasonably necessary for the preservation, protection, or disposition of the termination inventory.

(h) Except for normal spoilage, and except to the extent that the Government expressly assumed the risk of loss, the Contracting Officer shall exclude from the amounts payable to the Contractor under paragraph (g) of this clause, the fair value, as determined by the Contracting Officer, of property that is destroyed, lost, stolen, or damaged so as to become undeliverable to the Government or to a buyer.

(i) The cost principles and procedures of Part 31 of the Federal Acquisition Regulation, in effect on the date of this contract, shall govern all costs claimed, agreed to, or determined under this clause.

(j) The Contractor shall have the right of appeal, under the Disputes clause, from any determination made by the Contracting Officer under paragraph (e), (g), or (l) of this clause, except that if the Contractor failed to submit the termination settlement proposal or request for equitable adjustment within the time provided in paragraph (e) or (l), respectively, and failed to request a time extension, there is no right of appeal.

(k) In arriving at the amount due the Contractor under this clause, there shall be deducted--

(1) All unliquidated advance or other payments to the Contractor under the terminated portion of this contract;

(2) Any claim which the Government has against the Contractor under this contract; and

(3) The agreed price for, or the proceeds of sale of, materials, supplies, or other things acquired by the Contractor or sold under the provisions of this clause and not recovered by or credited to the Government.

(l) If the termination is partial, the Contractor may file a proposal with the Contracting Officer for an equitable adjustment of the price(s) of the continued portion of the contract. The Contracting Officer shall make any equitable adjustment agreed upon. Any proposal by the Contractor for an equitable adjustment under this clause shall be requested within 90 days from the effective date of termination unless extended in writing by the Contracting Officer.

(m)(1) The Government may, under the terms and conditions it prescribes, make partial payments and payments against costs incurred by the Contractor for the terminated portion of the contract, if the Contracting Officer believes the total of these payments will not exceed the amount to which the Contractor will be entitled.

(2) If the total payments exceed the amount finally determined to be due, the Contractor shall repay the excess to the Government upon demand, together with interest computed at the rate established by the Secretary of the Treasury under 50 U.S.C. App. 1215(b)(2). Interest shall be computed for the period from the date the excess payment is received by the Contractor to the date the excess is repaid. Interest shall not be charged on any excess payment due to a reduction in the Contractor's termination settlement proposal because of retention or other disposition of termination inventory until 10 days after the date of the retention or disposition, or a later date determined by the Contracting Officer because of the circumstances.

(n) Unless otherwise provided in this contract or by statute, the Contractor shall maintain all records and documents relating to the terminated portion of this contract for 3 years after final settlement. This includes all books and other evidence bearing on the Contractor's costs and expenses under this contract. The Contractor shall make these records and documents available to the Government, at the Contractor's office, at all reasonable times, without any direct charge. If approved by the Contracting Officer, photographs, microphotographs, or other authentic reproductions may be maintained instead of original records and documents.

(End of clause)

52.249-7 TERMINATION (FIXED-PRICE ARCHITECT-ENGINEER) (APR 1984)

(a) The Government may terminate this contract in whole or, from time to time, in part, for the Government's convenience or because of the failure of the Contractor to fulfill the contract obligations. The Contracting Officer shall terminate by delivering to the Contractor a Notice of Termination specifying the nature, extent, and effective date of the termination. Upon receipt of the notice, the Contractor shall (1) immediately discontinue all services affected (unless the notice directs otherwise), and (2) deliver to the Contracting Officer all data, drawings, specifications, reports, estimates, summaries, and other information and materials accumulated in performing this contract, whether completed or in process.

(b) If the termination is for the convenience of the Government, the Contracting Officer shall make an equitable adjustment in the contract price but shall allow no anticipated profit on unperformed services.

(c) If the termination is for failure of the Contractor to fulfill the contract obligations, the Government may complete the work by contract or otherwise and the Contractor shall be liable for any additional cost incurred by the Government.

(d) If, after termination for failure to fulfill contract obligations, it is determined that the Contractor had not failed, the rights and obligations of the parties shall be the same as if the termination had been issued for the convenience of the Government.

(xi) The rights and remedies of the Government provided in this clause are in addition to any other rights and remedies provided by law or under this contract.

(End of clause)

52.249-10 DEFAULT (FIXED-PRICE CONSTRUCTION) (APR 1984)

(a) If the Contractor refuses or fails to prosecute the work or any separable part, with the diligence that will insure its completion within the time specified in this contract including any extension, or fails to complete the work within this time, the Government may, by written notice to the Contractor, terminate the right to proceed with the work (or the separable part of the work) that has been delayed. In this event, the Government may take over the work and complete it by contract or otherwise, and may take possession of and use any materials, appliances, and plant on the work site necessary for completing the work. The Contractor and its sureties shall be liable for any damage to the Government resulting from the Contractor's refusal or failure to complete the work within the specified time, whether or not the Contractor's right to proceed with the work is terminated. This liability includes any increased costs incurred by the Government in completing the work.

(b) The Contractor's right to proceed shall not be terminated nor the Contractor charged with damages under this clause, if--

(1) The delay in completing the work arises from unforeseeable causes beyond the control and without the fault or negligence of the Contractor. Examples of such causes include

(i) acts of God or of the public enemy,

(ii) acts of the Government in either its sovereign or contractual capacity,

(iii) acts of another Contractor in the performance of a contract with the Government,

(iv) fires,

(v) floods,

(vi) epidemics,

(vii) quarantine restrictions,

(viii) strikes,

(ix) freight embargoes,

(x) unusually severe weather, or delays of subcontractors or suppliers at any tier arising from unforeseeable causes beyond the control and without the fault or negligence of both the Contractor and the subcontractors or suppliers; and

(2) The Contractor, within 10 days from the beginning of any delay (unless extended by the Contracting Officer), notifies the Contracting Officer in writing of the causes of delay. The Contracting Officer shall ascertain the facts and the extent of delay. If, in the judgment of the Contracting Officer, the findings of fact warrant such action, the time for completing the work shall be extended. The findings of the Contracting Officer shall be final and conclusive on the parties, but subject to appeal under the Disputes clause.

(c) If, after termination of the Contractor's right to proceed, it is determined that the Contractor was not in default, or that the delay was excusable, the rights and obligations of the parties will be the same as if the termination had been issued for the convenience of the Government.

The rights and remedies of the Government in this clause are in addition to any other rights and remedies provided by law or under this contract.

(End of clause)

52.253-1 COMPUTER GENERATED FORMS (JAN 1991)

(a) Any data required to be submitted on a Standard or Optional Form prescribed by the Federal Acquisition Regulation (FAR) may be submitted on a computer generated version of the form, provided there is no change to the name, content, or sequence of the data elements on the form, and provided the form carries the Standard or Optional Form number and edition date.

(b) Unless prohibited by agency regulations, any data required to be submitted on an agency unique form prescribed by an agency supplement to the FAR may be submitted on a computer generated version of the form provided there is no change to the name, content, or sequence of the data elements on the form and provided the form carries the agency form number and edition date.

(xii) If the Contractor submits a computer generated version of a form that is different than the required form, then the rights and obligations of the parties will be determined based on the content of the required form.

(End of clause)

252.201-7000 CONTRACTING OFFICER'S REPRESENTATIVE (DEC 1991)

(a) "Definition. Contracting officer's representative" means an individual designated in accordance with subsection 201.602-2 of the Defense Federal Acquisition Regulation Supplement and authorized in writing by the contracting officer to perform specific technical or administrative functions.

(b) If the Contracting Officer designates a contracting officer's representative (COR), the Contractor will receive a copy of the written designation. It will specify the extent of the COR's authority to act on behalf of the contracting officer. The COR is not authorized to make any commitments or changes that will affect price, quality, quantity, delivery, or any other term or condition of the contract.

(End of clause)

252.203-7001 PROHIBITION ON PERSONS CONVICTED OF FRAUD OR OTHER DEFENSE-CONTRACT-RELATED FELONIES (MAR 1999)

(a) Definitions. As used in this clause—

(1) “Arising out of a contract with the DoD” means any act in connection with—

(i) Attempting to obtain;

(ii) Obtaining, or

(iii) Performing a contract or first-tier subcontract of any agency, department, or component of the Department of Defense (DoD).

(2) “Conviction of fraud or any other felony” means any conviction for fraud or a felony in violation of state or Federal criminal statutes, whether entered on a verdict or plea, including a plea of *nolo contendere*, for which sentence has been imposed.

(3) “Date of conviction” means the date judgment was entered against the individual.

(b) Any individual who is convicted after September 29, 1988, of fraud or any other felony arising out of a contract with the DoD is prohibited from serving--

(1) In a management or supervisory capacity on any DoD contract or first-tier subcontract;

(2) On the board of directors of any DoD contractor or first-tier subcontractor;

(3) As a consultant, agent, or representative for any DoD contractor or first-tier subcontractor; or

(4) In any other capacity with the authority to influence, advise, or control the decisions of any DoD contractor or subcontractor with regard to any DoD contract or first-tier subcontract.

(c) Unless waived, the prohibition in paragraph (b) of this clause applies for not less than 5 years from the date of conviction.

(d) 10 U.S.C. 2408 provides that a defense contractor or first-tier subcontractor shall be subject to a criminal penalty of not more than $500,000 if convicted of knowingly—

(1) Employing a person under a prohibition specified in paragraph (b) of this clause; or

(2) Allowing such a person to serve on the board of directors of the contractor or first-tier subcontractor.

(e) In addition to the criminal penalties contained in 10 U.S.C. 2408, the Government may consider other available remedies, such as—

(1) Suspension or debarment;

(2) Cancellation of the contract at no cost to the Government; or

(3) Termination of the contract for default.

(f) The Contractor may submit written requests for waiver of the prohibition in paragraph (b) of this clause to the Contracting Officer. Requests shall clearly identify—

(1) The person involved;

(2) The nature of the conviction and resultant sentence or punishment imposed;

(3) The reasons for the requested waiver; and

(4) An explanation of why a waiver is in the interest of national security.

(g) The Contractor agrees to include the substance of this clause, appropriately modified to reflect the identity and relationship of the parties, in all first-tier subcontracts exceeding the simplified acquisition threshold in Part 2 of the Federal Acquisition Regulation, except those for commercial items or components.

(h) Pursuant to 10 U.S.C. 2408(c), defense contractors and subcontractors may obtain information as to whether a particular person has been convicted of fraud or any other felony arising out of a contract with the DoD by contacting The Office of Justice Programs, The Denial of Federal Benefits Office, U.S. Department of Justice, telephone (202) 616-3507.

(End of clause)

252.203-7002 DISPLAY OF DOD HOTLINE POSTER (DEC 1991)

(a) The Contractor shall display prominently in common work areas within business segments performing work under Department of Defense (DoD) contracts, DoD Hotline Posters prepared by the DoD Office of the Inspector General.

(b) DoD Hotline Posters may be obtained from the DoD Inspector General, ATTN: Defense Hotline, 400 Army Navy Drive, Washington, DC 22202-2884.

(xiii) The Contractor need not comply with paragraph (a) of this clause if it has established a mechanism, such as a hotline, by which employees may report suspected instances of improper conduct, and instructions that encourage employees to make such reports.

(End of clause)

252.204-7000 DISCLOSURE OF INFORMATION (DEC 1991)

(a) The Contractor shall not release to anyone outside the Contractor's organization any unclassified information, regardless of medium (e.g., film, tape, document), pertaining to any part of this contract or any program related to this contract, unless--

(1) The Contracting Officer has given prior written approval; or

(2) The information is otherwise in the public domain before the date of release.

(b) Requests for approval shall identify the specific information to be released, the medium to be used, and the purpose for the release. The Contractor shall submit its request to the Contracting Officer at least 45 days before the proposed date for release.

(c) The Contractor agrees to include a similar requirement in each subcontract under this contract. Subcontractors shall submit requests for authorization to release through the prime contractor to the Contracting Officer.

(End of clause)

252.204-7003 CONTROL OF GOVERNMENT PERSONNEL WORK PRODUCT (APR 1992)

The Contractor's procedures for protecting against unauthorized disclosure of information shall not require Department of Defense employees or members of the Armed Forces to relinquish control of their work products, whether classified or not, to the contractor.

(End of clause)

252.204-7004 REQUIRED CENTRAL CONTRACTOR REGISTRATION (NOV 2001)

(a) Definitions.

As used in this clause--

(1) Central Contractor Registration (CCR) database means the primary DoD repository for contractor information required for the conduct of business with DoD.

(2) Data Universal Numbering System (DUNS) number means the 9-digit number assigned by Dun and Bradstreet Information Services to identify unique business entities.

(3) Data Universal Numbering System +4 (DUNS+4) number means the DUNS number assigned by Dun and Bradstreet plus a 4-digit suffix that may be assigned by a parent (controlling) business concern. This 4-digit suffix may be assigned at the discretion of the parent business concern for such purposes as identifying subunits or affiliates of the parent business concern.

(4) Registered in the CCR database means that all mandatory information, including the DUNS number or the DUNS+4 number, if applicable, and the corresponding Commercial and Government Entity (CAGE) code, is in the CCR database; the DUNS number and the CAGE code have been validated; and all edits have been successfully completed.

(b)(1) By submission of an offer, the offeror acknowledges the requirement that a prospective awardee must be registered in the CCR database prior to award, during performance, and through final payment of any contract resulting from this solicitation, except for awards to foreign vendors for work to be performed outside the United States.

(2) The offeror shall provide its DUNS or, if applicable, its DUNS+4 number with its offer, which will be used by the Contracting Officer to verify that the offeror is registered in the CCR database.

(3) Lack of registration in the CCR database will make an offeror ineligible for award.

(4) DoD has established a goal of registering an applicant in the CCR database within 48 hours after receipt of a complete and accurate application via the Internet. However, registration of an applicant submitting an application through a method other than the Internet may take up to 30 days. Therefore, offerors that are not registered should consider applying for registration immediately upon receipt of this solicitation.

(c) The Contractor is responsible for the accuracy and completeness of the data within the CCR, and for any liability resulting from the Government's reliance on inaccurate or incomplete data. To remain registered in the CCR database after the initial registration, the Contractor is required to confirm on an annual basis that its information in the CCR database is accurate and complete.

(d) Offerors and contractors may obtain information on registration and annual confirmation requirements by calling 1-888-227-2423, or via the Internet at http://www.ccr.gov.

(End of clause)

252.205-7000 PROVISION OF INFORMATION TO COOPERATIVE AGREEMENT HOLDERS (DEC 1991)

(a) Definition.

"Cooperative agreement holder" means a State or local government; a private, nonprofit organization; a tribal organization (as defined in section 4(c) of the Indian Self-Determination and Education Assistance Act (Pub. L. 93-268; 25 U.S.C. 450 (c))); or an economic enterprise (as defined in section 3(e) of the Indian Financing Act of 1974 (Pub. L. 93-362; 25 U.S.C. 1452(e))) whether such economic enterprise is organized for profit or nonprofit purposes; which has an agreement with the Defense Logistics Agency to furnish procurement technical assistance to business entities.

(b) The Contractor shall provide cooperative agreement holders, upon their request, with a list of those appropriate employees or offices responsible for entering into subcontracts under defense contracts. The list shall include the business address, telephone number, and area of responsibility of each employee or office.

(c) The Contractor need not provide the listing to a particular cooperative agreement holder more frequently than once a year.

(End of clause)

252.209-7000 ACQUISITION FROM SUBCONTRACTORS SUBJECT TO ONSITE INSPECTION UNDER THE INTERMEDIATE-RANGE NUCLEAR FORCES (INF) TREATY (NOV 1995)

(a) The Contractor shall not deny consideration for a subcontract award under this contract to a potential subcontractor subject to on-site inspection under the INF Treaty, or a similar treaty, solely or in part because of the actual or potential presence of Soviet inspectors at the subcontractor's facility, unless the decision is approved by the Contracting Officer.

(b) The Contractor shall incorporate this clause, including this paragraph (b), in all solicitations and contracts exceeding the simplified acquisition threshold in part 13 of the Federal Acquisition Regulation, except those for commercial items.

(End of clause)

252.209-7004 SUBCONTRACTING WITH FIRMS THAT ARE OWNED OR CONTROLLED BY THE GOVERNMENT OF A TERRORIST COUNTRY (MAR 1998)

(a) Unless the Government determines that there is a compelling reason to do so, the Contractor shall not enter into any subcontract in excess of $25,000 with a firm, or subsidiary of a firm, that is identified, on the List of Parties Excluded from Federal Procurement and Nonprocurement Programs, as being ineligible for the award of Defense contracts or subcontracts because it is owned or controlled by the government of a terrorist country.

(b) A corporate officer or a designee of the Contractor shall notify the Contracting Officer, in writing, before entering into a subcontract with a party that is identified, on the List of Parties Excluded from Federal Procurement and Nonprocurement Programs, as being ineligible for the award of Defense contracts or subcontracts because it is owned or controlled by the government of a terrorist country. The notice must include the name of the proposed subcontractor notwithstanding its inclusion on the List of Parties Excluded From Federal Procurement and Nonprocurement Programs.

(End of clause)

252.215-7000 PRICING ADJUSTMENTS (DEC 1991)

The term "pricing adjustment," as used in paragraph (a) of the clauses entitled "Price Reduction for Defective Cost or Pricing Data - Modifications," "Subcontractor Cost or Pricing Data," and "Subcontractor Cost or Pricing Data - Modifications," means the aggregate increases and/or decreases in cost plus applicable profits.

(End of clause)

252.219-7003 SMALL, SMALL DISADVANTAGED AND WOMEN-OWNED SMALL BUSINESS SUBCONTRACTING PLAN (DOD CONTRACTS) (APR. 1996)

This clause supplements the Federal Acquisition Regulation 52.219-9, Small, Small Disadvantaged and Women-Owned Small Business Subcontracting Plan, clause of this contract.

(a) *Definitions. Historically black colleges and universities,* as used in this clause, means institutions determined by the Secretary of Education to meet the requirements of 34 CFR 608.2. The term also means any nonprofit research institution that was an integral part of such a college or university before November 14, 1986.

Minority institutions, as used in this clause, means institutions meeting the requirements of section 1046(3) of the Higher Education Act of 1965 (20 U.S.C. 1135d-5(3)). The term also includes Hispanic-serving institutions as defined in section 316(b)(1) of such Act (20 U.S.C. 1059c(b)(1)).

(b) Except for company or division-wide commercial items subcontracting plans, the term *small disadvantaged business*, when used in the FAR 52.219-9 clause, includes historically black colleges and universities and minority institutions, in addition to small disadvantaged business concerns.

(c) Work under the contract or its subcontracts shall be credited toward meeting the small disadvantaged business concern goal required by paragraph (d) of the FAR 52.219-9 clause when:

(1) It is performed on Indian lands or in joint venture with an Indian tribe or a tribally-owned corporation, and

(2) It meets the requirements of 10 U.S.C. 2323a.

(d) Subcontracts awarded to workshops approved by the Committee for Purchase from People Who are Blind or Severely Disabled (41 U.S.C. 46-48), may be counted toward the Contractor's small business subcontracting goal.

(e) A mentor firm, under the Pilot Mentor-Protege Program established under Section 831 of Pub. L. 101-510, as amended, may count toward its small disadvantaged business goal, subcontracts awarded--

(f) The master plan approval referred to in paragraph (f) of the FAR 52.219-9 clause is approval by the Contractor's cognizant contract administration activity.

(g) In those subcontracting plans which specifically identify small, small disadvantaged, and women-owned small businesses, the Contractor shall notify the Administrative Contracting Officer of any substitutions of firms that are not small, small disadvantaged, or women-owned small businesses for the firms listed in the subcontracting plan. Notifications shall be in writing and shall occur within a reasonable period of time after award of the subcontract. Contractor-specified formats shall be acceptable.

(End of clause)

252.223-7001 HAZARD WARNING LABELS (DEC 1991)

(a) "Hazardous material," as used in this clause, is defined in the Hazardous Material Identification and Material Safety Data clause of this contract.

(b) The Contractor shall label the item package (unit container) of any hazardous material to be delivered under this contract in accordance with the Hazard Communication Standard (29 CFR 1910.1200 et seq). The Standard requires that the hazard warning label conform to the requirements of the standard unless the material is otherwise subject to the labeling requirements of one of the following statutes:

(1) Federal Insecticide, Fungicide and Rodenticide Act;

(2) Federal Food, Drug and Cosmetics Act;

(3) Consumer Product Safety Act;

(4) Federal Hazardous Substances Act; or

(5) Federal Alcohol Administration Act.

(c) The Offeror shall list which hazardous material listed in the Hazardous Material Identification and Material Safety Data clause of this contract will be labeled in accordance with one of the Acts in paragraphs (b)(1) through (5) of this clause instead of the Hazard Communication Standard. Any hazardous material not listed will be interpreted to mean that a label is required in accordance with the Hazard Communication Standard.

MATERIAL (If None, Insert "None.")	ACT
_____	_____
_____	_____

(d) The apparently successful Offeror agrees to submit, before award, a copy of the hazard warning label for all hazardous materials not listed in paragraph (c) of this clause. The Offeror shall submit the label with the Material Safety Data Sheet being furnished under the Hazardous Material Identification and Material Safety Data clause of this contract.

(e) The Contractor shall also comply with MIL-STD-129, Marking for Shipment and Storage (including revisions adopted during the term of this contract).

(End of clause)

252.223-7006 PROHIBITION ON STORAGE AND DISPOSAL OF TOXIC AND HAZARDOUS MATERIALS (APR 1993)

(a) "Definitions".

As used in this clause --

(1) "Storage" means a non-transitory, semi-permanent or permanent holding, placement, or leaving of material. It does not include a temporary accumulation of a limited quantity of a material used in or a waste generated or resulting from authorized activities, such as servicing, maintenance, or repair of Department of Defense (DoD) items, equipment, or facilities.

(2) "Toxic or hazardous materials" means:

(i) Materials referred to in section 101(14) of the Comprehensive Environmental Response, Compensation, and Liability Act (CERCLA) of 1980 (42 U.S.C. 9601(14)) and materials designated under section 102 of CERCLA (42 U.S.C. 9602) (40 CFR part 302);

(ii) Materials that are of an explosive, flammable, or pyrotechnic nature; or

(iii) Materials otherwise identified by the Secretary of Defense as specified in DoD regulations.

(b) In accordance with 10 U.S.C. 2692, the Contractor is prohibited from storing or disposing of non-DoD-owned toxic or hazardous materials on a DoD installation, except to the extent authorized by a statutory exception to 10 U.S.C. 2692 or as authorized by the Secretary of Defense or his designee.

(End of clause)

252.225-7012 PREFERENCE FOR CERTAIN DOMESTIC COMMODITIES (APR 2002)

(a) Definitions. As used in this clause--

(1) Component means any item supplied to the Government as part of an end product or of another component.

(2) End product means supplies delivered under a line item of this contract.

(b) The Contractor shall deliver under this contract only such of the following items, either as end products or components, that have been grown, reprocessed, reused, or produced in the United States, its possessions, or Puerto Rico:

(1) Food.

(2) Clothing.

(3) Tents, tarpaulins, or covers.

(4) Cotton and other natural fiber products.

(5) Woven silk or woven silk blends.

(6) Spun silk yarn for cartridge cloth.

(7) Synthetic fabric, and coated synthetic fabric, including all textile fibers and yarns that are for use in such fabrics.

(8) Canvas products.

(9) Wool (whether in the form of fiber or yarn or contained in fabrics, materials, or manufactured articles).

(10) Any item of individual equipment (Federal Supply Class 8465) manufactured from or containing fibers, yarns, fabrics, or materials listed in this paragraph (b).

(c) This clause does not apply--

(1) To items listed in section 25.104(a) of the Federal Acquisition Regulation (FAR), or other items for which the Government has determined that a satisfactory quality and sufficient quantity cannot be acquired as and when needed at U.S. market prices;

(2) To end products incidentally incorporating cotton, other natural fibers, or wool, for which the estimated value of the cotton, other natural fibers, or wool--

(i) Is not more than 10 percent of the total price of the end product; and (ii) Does not exceed the simplified acquisition threshold in FAR part 2;

(3) To foods that have been manufactured or processed in the United States, its possessions, or Puerto Rico, regardless of where the foods (and any component if applicable) were grown or produced;

(4) To chemical warfare protective clothing produced in the countries listed in subsection 225.872-1 of the Defense FAR Supplement; or

(5) To fibers and yarns that are for use in synthetic fabric or coated synthetic fabric (but does apply to the synthetic or coated synthetic fabric itself), if--

(i) The fabric is to be used as a component of an end product that is not a textile product. Examples of textile products, made in whole or in part of fabric, include--

(A) Draperies, floor coverings, furnishings, and bedding (Federal Supply Group 72, Household and Commercial Furnishings and Appliances);

(B) Items made in whole or in part of fabric in Federal Supply Group 83, Textile/leather/furs/apparel/findings/ tents/flags, or Federal Supply Group 84, Clothing, Individual Equipment and Insignia;

(C) Upholstered seats (whether for household, office, or other use); and

(D) Parachutes (Federal Supply Class 1670); or

(ii) The fibers and yarns are para-aramid fibers and yarns manufactured in the Netherlands.

(End of clause)

252.225-7031 SECONDARY ARAB BOYCOTT OF ISRAEL (JUN 1992)

(a) Definitions. As used in this clause--

(1) "Foreign person" means any person other than a United States person as defined in Section 16(2) of the Export Administration Act of 1979 (50 U.S.C. App. Sec 2415).

(2) "United States person" is defined in Section 16(2) of the Export Administration Act of 1979 and means any United States resident or national (other than an individual resident outside the United States and employed by other than a United States person), any domestic concern (including any permanent domestic establishment of any foreign concern), and any foreign subsidiary or affiliate (including any permanent foreign establishment) of any domestic concern which is controlled in fact by such domestic concerns, as determined under regulations of the President.

(b) Certification. By submitting this offer, the Offeror, if a foreign person, company or entity, certifies that it--

(1) Does not comply with the Secondary Arab Boycott of Israel; and

(2) Is not taking or knowingly agreeing to take any action, with respect to the Secondary Boycott of Israel by Arab countries, which 50 U.S.C. App. Sec 2407(a) prohibits a United States person from taking.

(End of clause)

252.226-7001 UTILIZATION OF INDIAN ORGANIZATIONS AND INDIAN-OWNED ECONOMIC ENTERPRISES-DOD CONTRACTS (SEP 2001)

(a) Definitions. As used in this clause--

“Indian” means any person who is a member of any Indian tribe, band, group, pueblo, or community that is recognized by the Federal Government as eligible for services from the Bureau of Indian Affairs (BIA) in accordance with 25 U.S.C. 1452(c) and any “Native” as defined in the Alaska Native Claims Settlement Act (43 U.S.C. 1601).

“Indian organization” means the governing body of any Indian tribe or entity established or recognized by the governing body of an Indian tribe for the purposes of 25 U.S.C. Chapter 17.

“Indian-owned economic enterprise” means any Indian-owned (as determined by the Secretary of the Interior) commercial, industrial, or business activity established or organized for the purpose of profit, provided that Indian ownership constitutes not less than 51 percent of the enterprise.

“Indian tribe” means any Indian tribe, band, group, pueblo, or community, including native villages and native groups (including corporations organized by Kenai, Juneau, Sitka, and Kodiak) as defined in the

Alaska Native Claims Settlement Act, that is recognized by the Federal Government as eligible for services from BIA in accordance with 25 U.S.C. 1452 (c).

“Interested party” means a contractor or an actual or prospective offeror whose direct economic interest would be affected by the award of a subcontract or by the failure to award a subcontract.

(b) The Contract shall use its best efforts to give Indian organizations and Indian-owned economic enterprises the maximum practicable opportunity to participate in the subcontracts it awards, to the fullest extent consistent with efficient performance of the contract.

(c) The Contracting Officer and the Contractor, acting in good faith, may rely on the representation of an Indian organization or Indian-owned economic enterprise as to its eligibility, unless and interested party challenges its status or the Contracting Officer has independent reason to question that status.

(d) In the event of a challenge to the representation of a subcontractor, the Contracting Officer will refer the matter to the U.S. Department of the Interior, Bureau of Indian Affairs, Attn: Chief, Division of Contracting and Grants Administration, 1849 C Street NW, MS-2626-MIB, Washington, DC 20240-4000. The BIA will determine the eligibility and will notify the Contracting Officer. No incentive payment will be made--

(1) Within 59 working days of subcontract award;

(2) While a challenge is pending; or

(3) If a subcontractor is determined to be an ineligible participant.

(e)(1) The Contractor, on its own behalf or on behalf of a subcontractor at any tier, may request an adjustment under the Indian Incentive Program to the following:

(i) The estimated cost of cost-type contract.

(ii) The target cost of a cost-plus-incentive-fee contract.

(iii) The target cost and ceiling price of a fixed-price incentive contract.

(iv) The price of a firm-fixed-price contract.

(2) The amount of the adjustment that may be made to the contract is 5 percent of the estimated cost, target cost, or firm-fixed price included in the subcontract initially awarded to the Indian organization or Indian-owned economic enterprise.

(3) The Contractor has the burden of proving the amount claimed and must assert its request for an adjustment prior to completion of contract performance.

(4) The Contracting Officer, subject to the terms and conditions of the contract and the availability of funds, will authorize an incentive payment of 5 percent of the amount paid to the subcontractor.

(5) If the Contractor requests and receives an adjustment on behalf of a subcontractor, the Contractor is obligated to pay the subcontractor the adjustment.

(f) The Contractor shall insert the substance of this clause, including this paragraph (f), in all subcontracts that--

(1) Are for other than commercial items; and

(2) Are expected to exceed the simplified acquisition threshold in Part 2 of the Federal Acquisition Regulation.

(End of clause)

252.227-7022 GOVERNMENT RIGHTS (UNLIMITED) (MAR 1979)

The Government shall have unlimited rights, in all drawings, designs, specifications, notes and other works developed in the performance of this contract, including the right to use same on any other Government design or construction without additional compensation to the Contractor. The Contractor hereby grants to the Government a paid-up license throughout the world to all such works to which he may assert or establish any claim under design patent or copyright laws. The Contractor for a period of three (3) years after completion of the project agrees to furnish the original or copies of all such works on the request of the Contracting Officer.

(End of clause)

252.227-7033 RIGHTS IN SHOP DRAWINGS (APR 1966)

(a) Shop drawings for construction means drawings, submitted to the Government by the Construction Contractor, subcontractor or any lower-tier subcontractor pursuant to a construction contract, showing in detail (i) the proposed fabrication and assembly of structural elements and (ii) the installation (i.e., form, fit, and attachment details) of materials or equipment. The Government may duplicate, use, and disclose in any manner and for any purpose shop drawings delivered under this contract.

(b) This clause, including this paragraph (b), shall be included in all subcontracts hereunder at any tier.

252.236-7000 MODIFICATION PROPOSALS - PRICE BREAKDOWN. (DEC 1991)

(a) The Contractor shall furnish a price breakdown, itemized as required and within the time specified by the Contracting Officer, with any proposal for a contract modification.

(b) The price breakdown --

(1) Must include sufficient detail to permit an analysis of profit, and of all costs for --

(i) Material;

(ii) Labor;

(iii) Equipment;

(iv) Subcontracts; and

(v) Overhead; and

(2) Must cover all work involved in the modification, whether the work was deleted, added, or changed.

(c) The Contractor shall provide similar price breakdowns to support any amounts claimed for subcontracts.

(d) The Contractor's proposal shall include a justification for any time extension proposed.

252.236-7005 AIRFIELD SAFETY PRECAUTIONS. (DEC 1991)

(a) Definitions. As used in this clause --

(1) "Landing areas means" --

(i) The primary surfaces, comprising the surface of the runway, runway shoulders, and lateral safety zones. The length of each primary surface is the same as the runway length. The width of each primary surface is 2,000 feet (1,000 feet on each side of the runway centerline);

(ii) The "clear zone" beyond the ends of each runway, i.e., the extension of the primary surface for a distance of 1,000 feet beyond each end of each runway;

(iii) All taxiways, plus the lateral clearance zones along each side for the length of the taxiways (the outer edge of each lateral clearance zone is laterally 250 feet from the far or opposite edge of the taxiway, e.g., a 75-foot-wide taxiway would have a combined width of taxiway and lateral clearance zones of 425 feet); and

(iv) All aircraft parking aprons, plus the area 125 feet in width extending beyond each edge all around the aprons.

(2) "Safety precaution" areas means those portions of approach-departure clearance zones and transitional zones where placement of objects incident to contract performance might result in vertical projections at or above the approach-departure clearance, or the transitional surface.

(i) "The approach-departure clearance surface" is an extension of the primary surface and the clear zone at each end of each runway, for a distance of 50,000 feet, first along an inclined (glide angle) and then along a horizontal plane, both flaring symmetrically about the runway centerline extended.

(A) The inclined plane (glide angle) begins in the clear zone 200 feet past the end of the runway (and primary surface) at the same elevation as the end of the runway. It continues upward at a slope of 50:1 (1 foot vertically for each 50 feet horizontally) to an elevation of 500 feet above the established airfield elevation. At that point the plane becomes horizontal, continuing at that same uniform elevation to a point 50,000 feet longitudinally from the beginning of the inclined plane (glide angle) and ending there.

(B) The width of the surface at the beginning of the inclined plane (glide angle) is the same as the width of the clear zone. It then flares uniformly, reaching the maximum width of 16,000 feet at the end.

(ii) The "approach-departure clearance zone" is the ground area under the approach-departure clearance surface.

(iii) The "transitional surface" is a sideways extension of all primary surfaces, clear zones, and approach-departure clearance surfaces along inclined planes.

(A) The inclined plane in each case begins at the edge of the surface.

(B) The slope of the incline plane is 7:1 (1 foot vertically for each 7 feet horizontally). It continues to the point of intersection with the --

(1) Inner horizontal surface (which is the horizontal plane 150 feet above the established airfield elevation); or

(2) Outer horizontal surface (which is the horizontal plane 500 feet above the established airfield elevation),

whichever is applicable.

(iv) The "transitional zone" is the ground area under the transitional surface. (It adjoins the primary surface, clear zone, and approach-departure clearance zone.)

(b) General. (1) The Contractor shall comply with the requirements of this clause while --

(i) Operating all ground equipment (mobile or stationary);

(ii) Placing all materials; and

(iii) Performing all work, upon and around all airfields.

(2) The requirements of this clause are in addition to any other safety requirements of this contract.

(c) The Contractor shall -

(1) Report to the Contracting Officer before initiating any work;

(2) Notify the Contracting Officer of proposed changes to locations and operations;

(3) Not permit either its equipment or personnel to use any runway for purposes other than aircraft operation without permission of the Contracting Officer, unless the runway is -

(i) Closed by order of the Contracting Officer; and

(ii) Marked as provided in paragraph (d)(2) of this clause;

(4) Keep all paved surfaces, such as runways, taxiways, and hardstands, clean at all times and, specifically, free from small stones which might damage aircraft propellers or jet aircraft;

(5) Operate mobile equipment according to the safety provisions of this clause, while actually performing work on the airfield. At all other times, the Contractor shall remove all mobile equipment to locations -

(i) Approved by the Contracting Officer;

(ii) At a distance of at least 750 feet from the runway centerline, plus any additional distance; and

(iii) Necessary to ensure compliance with the other provisions of this clause; and

(6) Not open a trench unless material is on hand and ready for placing in the trench. As soon as practicable after material has been placed and work approved, the Contractor shall backfill and compact trenches as required by the contract. Meanwhile, all hazardous conditions shall be marked and lighted in accordance with the other provisions of this clause.

(d) Landing areas. The Contractor shall -

(1) Place nothing upon the landing areas without the authorization of the Contracting Officer;

(2) Outline those landing areas hazardous to aircraft, using (unless otherwise authorized by the Contracting Officer) red flags by day, and electric, battery-operated low-intensity red flasher lights by night;

(3) Obtain, at an airfield where flying is controlled, additional permission from the control tower operator every time before entering any landing area, unless the landing area is marked as hazardous in accordance with paragraph (d)(2)

of this clause;

(4) Identify all vehicles it operates in landing areas by means of a flag on a staff attached to, and flying above, the vehicle. The flag shall be three feet square, and consist of a checkered pattern of international orange and white squares of 1 foot on each side (except that the flag may vary up to ten percent from each of these dimensions);

(5) Mark all other equipment and materials in the landing areas, using the same marking devices as in paragraph (d)(2) of this clause; and

(6) Perform work so as to leave that portion of the landing area which is available to aircraft free from hazards, holes, piles of material, and projecting shoulders that might damage an airplane tire.

(e) Safety precaution areas. The Contractor shall -

(1) Place nothing upon the safety precaution areas without authorization of the Contracting Officer;

(2) Mark all equipment and materials in safety precaution areas, using (unless otherwise authorized by the Contracting Officer) red flags by day, and electric, battery-operated, low-intensity red flasher lights by night; and

(3) Provide all objects placed in safety precaution areas with a red light or red lantern at night, if the objects project above the approach-departure clearance surface or above the transitional surface.

252.242-7000 POSTAWARD CONFERENCE (DEC 1991)

The Contractor agrees to attend any postaward conference convened by the contracting activity or contract administration office in accordance with Federal Acquisition Regulation subpart 42.5.

(End of clause)

252.242-7004 MATERIAL MANAGEMENT AND ACCOUNTING SYSTEM (SEP 1996)

(a) Definitions. As used in this clause--

(1) Material management and accounting system means the Contractor's system or systems for planning, controlling, and accounting for the acquisition, use, issuing, and disposition of material. Material management and accounting systems may be manual or automated. They may be stand-alone systems or they may be integrated with planning, engineering, estimating, purchasing, inventory, accounting, or other systems.

(2) Valid time-phased requirements means material which is--

Needed to fulfill the production plan, including reasonable quantities for scrap, shrinkage, yield, etc.; and

(ii) Charged/billed to contracts or other cost objectives in a manner consistent with the need to fulfill the production plan.

(3) Contractor means a business unit as defined in section 31.001 of the Federal Acquisition Regulation (FAR).

(b) General. The Contractor agrees to--

(1) Maintain a material management and accounting system (MMAS) that--

(i) Reasonably forecasts material requirements;

(ii) Ensures that costs of purchased and fabricated material charged or allocated to a contract are based on valid time-phased requirements; and

(iii) Maintains a consistent, equitable, and unbiased logic for costing of material transactions.

(2) Assess its MMAS and take reasonable action to comply with the MMAS standards in paragraph (f) of this clause.

(c) Applicability. Paragraphs (d) and (e) of this clause apply only if the Contractor--

(1) Is a large business; and

(2) Received, in its fiscal year preceding award of this contract, Department of Defense prime contracts or subcontracts, and their modifications totaling--

(i) $70 million or more; or

(ii) $30 million or more (but less than $70 million), and is notified in writing by the Contracting Officer that paragraphs (d) and (e) apply.

(d) Disclosure, demonstration, and maintenance requirements. (1) The Contractor shall--

Disclose its MMAS to the Administrative Contracting Officer in writing; and

(ii) If requested by the Administrative Contracting Officer, demonstrate that the MMAS conforms to the standards in paragraph (f) of this clause.

(2) An MMAS disclosure is adequate when the Contractor has provided the Administrative Contracting Officer with documentation which--

(i) Accurately describes those policies, procedures, and practices that the Contractor currently uses in its MMAS; and

(ii) Provides sufficient detail for the Government to reasonably make an informed judgment regarding the adequacy of the MMAS.

(3) An MMAS demonstration is adequate when the Contractor has provided the Administrative Contracting Officer--

(i) Sufficient evidence to demonstrate the degree of compliance of its MMAS with the standards at paragraph (f) of this clause; and

(ii) Identification of any significant deficiencies, the estimated cost impact of the deficiency, and a comprehensive corrective action plan.

(4) The Contractor shall disclose significant changes in its MMAS to the Administrative Contracting Officer within 30 days of implementation.

(5) If the contractor desires the Government to protect such information as privileged or confidential, the Contractor shall--

(i) Notify the Government representative to whom the information is submitted, i.e., the ACO, or the auditor; and

(ii) Ensure an appropriate legend is on the face of the document(s) at the time of submission.

(e) Deficiencies. (1) If the Contractor receives a report which identifies deficiencies in its MMAS, the Contractor agrees to respond as follows--

(i) If the Contractor agrees with the report findings and recommendations, the Contractor shall--

(A) Within 30 days, state its agreement in writing; and

(B) Within 60 days, correct the deficiencies or submit a corrective action plan.

(ii) If the Contractor disagrees with the report findings and recommendations, the Contractor shall, within 30 days, state its rationale for each area of disagreement.

(2) The Administrative Contracting Officer shall evaluate the Contractor's response and notify the Contractor of the--

(i) Determination concerning remaining deficiencies;

(ii) Adequacy of any proposed or completed corrective action plan; and

(iii) Need for any new or revised corrective action plan.

(f) MMAS standards. MMAS systems shall have adequate internal accounting and administrative controls to ensure system and data integrity, and comply with the following:

(1) Have an adequate system description including policies, procedures, and operating instructions which comply with the Federal Acquisition Regulation and Defense FAR Supplement;

(2) Ensure that costs of purchased and fabricated material charged or allocated to a contract are based on valid time-phased requirements as impacted by minimum/economic order quantity restrictions--

(i) A 98 percent bill of material accuracy and a 95 percent master production schedule accuracy are desirable as a goal in order to ensure that requirements are both valid and appropriately time-phased.

(ii) If systems have accuracy levels below these, the Contractor shall demonstrate that--

(A) There is no material harm to the Government due to lower accuracy levels; and

(B) The cost to meet the accuracy goals is excessive in relation to the impact on the Government;

(3) Provide a mechanism to identify, report, and resolve system control weaknesses and manual override. Systems should identify operational exceptions such as excess/residual inventory as soon as known;

(4) Provide audit trails and maintain records (manual and those in machine readable form) necessary to evaluate system logic and to verify through transaction testing that the system is operating as desired;

(5) Establish and maintain adequate levels of record accuracy, and include reconciliation of recorded inventory quantities to physical inventory by part number on a periodic basis. A 95 percent accuracy level is desirable. If systems have an accuracy level below 95 percent, the Contractor shall demonstrate that--

(i) There is no material harm to the Government due to lower accuracy levels; and

(ii) The cost to meet the accuracy goal is excessive in relation to the impact on the Government;

(6) Provide detailed descriptions of circumstances which will result in manual or system generated transfers of parts;

(7) Maintain a consistent, equitable, and unbiased logic for costing of material transactions--

(i) The Contractor shall maintain and disclose written policies describing the transfer methodology and the loan/pay-back technique.

(ii) The costing methodology may be standard or actual cost, or any of the inventory costing methods in 48 CFR 9904.411-50(b). Consistency shall be maintained across all contract and customer types, and from accounting period to accounting period for initial charging and transfer charging.

(iii) The system should transfer parts and associated costs within the same billing period. In the few instances where this may not be appropriate, the Contractor may accomplish the material transaction using a loan/pay-back technique. The “loan/pay-back technique” means that the physical part is moved temporarily from the contract, but the cost of the part remains on the contract. The procedures for the loan/pay-back technique must be approved by the Administrative Contracting Officer. When the technique is used, the Contractor shall have controls to ensure--

(A) Parts are paid back expeditiously;

(B) Procedures and controls are in place to correct any overbilling that might occur;

(C) Monthly, at a minimum, identification of the borrowing contract and the date the part was borrowed; and

(D) The cost of the replacement part is charged to the borrowing contract;

(8) Where allocations from common inventory accounts are used, have controls (in addition to those in paragraphs (b)(2) and (7) of this clause) to ensure that--

(i) Reallocations and any credit due are processed no less frequently than the routine billing cycle;

(ii) Inventories retained for requirements which are not under contract are not allocated to contracts; and

(iii) Algorithms are maintained based on valid and current data;

(9) Notwithstanding FAR 45.505-3(f)(1)(ii), have adequate controls to ensure that physically commingled inventories that may include material for which costs are charged or allocated to fixed-price, cost-reimbursement, and commercial contracts do not compromise requirements of any of the standards in paragraphs (f)(1) through (8) of this clause. Government furnished material shall not be--

(i) Physically commingled with other material; or

(ii) Used on commercial work; and

(10) Be subjected to periodic internal audits to ensure compliance with established policies and procedures.

(End of clause)

252.243-7001 PRICING OF CONTRACT MODIFICATIONS (DEC 1991)

When costs are a factor in any price adjustment under this contract, the contract cost principles and procedures in FAR part 31 and DFARS part 231, in effect on the date of this contract, apply.

252.243-7002 REQUESTS FOR EQUITABLE ADJUSTMENT (MAR 1998)

(a) The amount of any request for equitable adjustment to contract terms shall accurately reflect the contract adjustment for which the Contractor believes the Government is liable. The request shall include only costs for performing the change, and shall not include any costs that already have been reimbursed or that have been separately claimed. All indirect costs included in the request shall be properly allocable to the change in accordance with applicable acquisition regulations.

(b) In accordance with 10 U.S.C. 2410(a), any request for equitable adjustment to contract terms that exceeds the simplified acquisition threshold shall bear, at the time of submission, the following certificate executed by an individual authorized to certify the request on behalf of the Contractor:

I certify that the request is made in good faith, and that the supporting data are accurate and complete to the best of my knowledge and belief.

(Official's Name)

(Title)

(c) The certification in paragraph (b) of this clause requires full disclosure of all relevant facts, including--

(1) Cost or pricing data if required in accordance with subsection 15.403-4 of the Federal Acquisition Regulation (FAR); and

(2) Information other than cost or pricing data, in accordance with subsection 15.403-3 of the FAR, including actual cost data and data to support any estimated costs, even if cost or pricing data are not required.

(d) The certification requirement in paragraph (b) of this clause does not apply to----

(1) Requests for routine contract payments; for example, requests for payment for accepted supplies and services, routine vouchers under a cost-reimbursement type contract, or progress payment invoices; or

(2) Final adjustment under an incentive provision of the contract.

252.244-7000 SUBCONTRACTS FOR COMMERCIAL ITEMS AND COMMERCIAL COMPONENTS (DOD) (MAR 2000)

In addition to the clauses listed in paragraph (c) of the Subcontracts for Commercial Items and Commercial Components clause of this contract (Federal Acquisition Regulation 52.244-6), the Contractor shall include the terms of the following clauses, if applicable, in subcontracts for commercial items or commercial components, awarded at any tier under this contract:

252.225-7014 Preference for Domestic Specialty Metals, Alternate I (10 U.S.C. 2241 note).

252.247-7023 Transportation of Supplies by Sea (10 U.S.C. 2631).

252.247-7024 Notification of Transportation of Supplies by Sea (10 U.S.C. 2631).

(End of clause)

252.247-7023 TRANSPORTATION OF SUPPLIES BY SEA (MAY 2002)

(a) Definitions. As used in this clause --

(1) "Components" means articles, materials, and supplies incorporated directly into end products at any level of manufacture, fabrication, or assembly by the Contractor or any subcontractor.

(2) "Department of Defense" (DoD) means the Army, Navy, Air Force, Marine Corps, and defense agencies.

(3) "Foreign flag vessel" means any vessel that is not a U.S.-flag vessel.

(4) "Ocean transportation" means any transportation aboard a ship, vessel, boat, barge, or ferry through international waters.

(5) "Subcontractor" means a supplier, materialman, distributor, or vendor at any level below the prime contractor whose contractual obligation to perform results from, or is conditioned upon, award of the prime contract and who is performing any part of the work or other requirement of the prime contract.

(6) "Supplies" means all property, except land and interests in land, that is clearly identifiable for eventual use by or owned by the DoD at the time of transportation by sea.

(i) An item is clearly identifiable for eventual use by the DoD if, for example, the contract documentation contains a reference to a DoD contract number or a military destination.

(ii) "Supplies" includes (but is not limited to) public works; buildings and facilities; ships; floating equipment and vessels of every character, type, and description, with parts, subassemblies, accessories, and equipment; machine tools; material; equipment; stores of all kinds; end items; construction materials; and components of the foregoing.

(7) "U.S.-flag vessel" means a vessel of the United States or belonging to the United States, including any vessel registered or having national status under the laws of the United States.

(b)(1) The Contractor shall use U.S.-flag vessels when transporting any supplies by sea under this contract.

(2) A subcontractor transporting supplies by sea under this contract shall use U.S.-flag vessels if--

(i) This contract is a construction contract; or

(ii) The supplies being transported are--

(A) Noncommercial items; or

(B) Commercial items that--

(1) The Contractor is reselling or distributing to the Government without adding value (generally, the Contractor does not add value to items that it contracts for f.o.b. destination shipment);

(2) Are shipped in direct support of U.S. military contingency operations, exercises, or forces deployed in humanitarian or peacekeeping operations; or

(3) Are commissary or exchange cargoes transported outside of the Defense Transportation System in accordance with 10 U.S.C. 2643.

(c) The Contractor and its subcontractors may request that the Contracting Officer authorize shipment in foreign-flag vessels, or designate available U.S.-flag vessels, if the Contractor or a subcontractor believes that --

(1) U.S.-flag vessels are not available for timely shipment;

(2) The freight charges are inordinately excessive or unreasonable; or

(3) Freight charges are higher than charges to private persons for transportation of like goods.

(d) The Contractor must submit any request for use of other than U.S.-flag vessels in writing to the Contracting Officer at least 45 days prior to the sailing date necessary to meet its delivery schedules. The Contracting Officer will process requests submitted after such date(s) as expeditiously as possible, but the Contracting Officer's failure to grant approvals to meet the shipper's sailing date will not of itself constitute a compensable delay under this or any other clause of this contract. Requests shall contain at a minimum --

(1) Type, weight, and cube of cargo;

(2) Required shipping date;

(3) Special handling and discharge requirements;

(4) Loading and discharge points;

(5) Name of shipper and consignee;

(6) Prime contract number; and

(7) A documented description of efforts made to secure U.S.-flag vessels, including points of contact (with names and telephone numbers) with at least two U.S.-flag carriers contacted. Copies of telephone notes, telegraphic and facsimile message or letters will be sufficient for this purpose.

(e) The Contractor shall, within 30 days after each shipment covered by this clause, provide the Contracting Officer and the Maritime Administration, Office of Cargo Preference, U.S. Department of Transportation, 400 Seventh Street SW., Washington, DC 20590, one copy of the rated on board vessel operating carrier's ocean bill of lading, which shall contain the following information:

(1) Prime contract number;

(2) Name of vessel;

(3) Vessel flag of registry;

(4) Date of loading;

(5) Port of loading;

(6) Port of final discharge;

(7) Description of commodity;

(8) Gross weight in pounds and cubic feet if available;

(9) Total ocean freight in U.S. dollars; and

(10) Name of the steamship company.

(f) The Contractor shall provide with its final invoice under this contract a representation that to the best of its knowledge and belief--

(1) No ocean transportation was used in the performance of this contract;

(2) Ocean transportation was used and only U.S.-flag vessels were used for all ocean shipments under the contract;

(3) Ocean transportation was used, and the Contractor had the written consent of the Contracting Officer for all non-U.S.-flag ocean transportation; or

(4) Ocean transportation was used and some or all of the shipments were made on non-U.S.-flag vessels without the written consent of the Contracting Officer. The Contractor shall describe these shipments in the following format:

ITEM DESCRIPTION	CONTRACT LINE ITEMS	QUANTITY

TOTAL_____

(g) If the final invoice does not include the required representation, the Government will reject and return it to the Contractor as an improper invoice for the purposes of the Prompt Payment clause of this contract. In the event there has been unauthorized use of non-U.S.-flag vessels in the performance of this contract, the Contracting Officer is entitled to equitably adjust the contract, based on the unauthorized use.

(h) In the award of subcontracts for the types of supplies described in paragraph (b)(2) of this clause, the Contractor shall flow down the requirements of this clause as follows:

(1) The Contractor shall insert the substance of this clause, including this paragraph (h), in subcontracts that exceed the simplified acquisition threshold in part 2 of the Federal Acquisition Regulation.

(2) The Contractor shall insert the substance of paragraphs (a) through (e) of this clause, and this paragraph (h), in subcontracts that are at or below the simplified acquisition threshold in part 2 of the Federal Acquisition Regulation.

(End of clause)

252.247-7024 NOTIFICATION OF TRANSPORTATION OF SUPPLIES BY SEA (MAR 2000)

(a) The Contractor has indicated by the response to the solicitation provision, Representation of Extent of Transportation by Sea, that it did not anticipate transporting by sea any supplies. If, however, after the award of this contract, the Contractor learns that supplies, as defined in the Transportation of Supplies by Sea clause of this contract, will be transported by sea, the Contractor --

(1) Shall notify the Contracting Officer of that fact; and

(2) Hereby agrees to comply with all the terms and conditions of the Transportation of Supplies by Sea clause of this contract.

(b) The Contractor shall include this clause; including this paragraph (b), revised as necessary to reflect the relationship of the contracting parties--

(1) In all subcontracts under this contract, if this contract is a construction contract; or

(2) If this contract is not a construction contract, in all subcontracts under this contract that are for--

(i) Noncommercial items; or

(ii) Commercial items that--

(A) The Contractor is reselling or distributing to the Government without adding value (generally, the Contractor does not add value to items that it subcontracts for f.o.b. destination shipment);

(B) Are shipped in direct support of U.S. military contingency operations, exercises, or forces deployed in humanitarian or peacekeeping operations; or

(C) Are commissary or exchange cargoes transported outside of the Defense Transportation System in accordance with 10 U.S.C. 2643.

(End of clause)

Section 00800 - Special Contract Requirements

CLAUSES INCORPORATED BY FULL TEXT

52.211-10 COMMENCEMENT, PROSECUTION, AND COMPLETION OF WORK (APR 1984)

The Contractor shall be required to (a) commence work under this contract within 10 calendar days after the date the Contractor receives the notice to proceed, (b) prosecute the work diligently, and (c) complete the entire work ready for use not later than 600 calendars days after Notice to Proceed . The time stated for completion shall include final cleanup of the premises.

(End of clause)

52.211-12 LIQUIDATED DAMAGES--CONSTRUCTION (SEP 2000)

(a) If the Contractor fails to complete the work within the time specified in the contract, the Contractor shall pay liquidated damages to the Government in the amount of $766.00 for each calendar day of delay until the work is completed or accepted.

(b) If the Government terminates the Contractor's right to proceed, liquidated damages will continue to accrue until the work is completed. These liquidated damages are in addition to excess costs of repurchase under the Termination clause.

(End of clause)

52.211-13 TIME EXTENSIONS (SEP 2000)

Time extensions for contract changes will depend upon the extent, if any, by which the changes cause delay in the completion of the various elements of construction. The change order granting the time extension may provide that the contract completion date will be extended only for those specific elements related to the changed work and that the remaining contract completion dates for all other portions of the work will not be altered. The change order also may provide an equitable readjustment of liquidated damages under the new completion schedule.

(End of clause)

52.217-7 OPTION FOR INCREASED QUANTITY--SEPARATELY PRICED LINE ITEM (MAR 1989)

The Government may require the delivery of the numbered line item, identified in the Schedule as an option item, in the quantity and at the price stated in the Schedule. The Contracting Officer may exercise the option by written notice to the Contractor within 60 days of award of the basic contract. Delivery of added items shall continue at the same rate that like items are called for under the contract, unless the parties otherwise agree.

(End of clause)

52.219-4002 REPORTING REQUIREMENTS--SUBCONTRACTING PLAN (CESAD-CT JUL 1993)

(a) Retainage will be withheld from progress payments in an amount sufficient to protect the Government's ability to assess Liquidated Damages in accordance with FAR clause 52.219-0016 for failure to submit timely SF 294 and SF 295 Reports. The amount of retainage will be determined in accordance with the following formula:
(b) Total dollar amount proposed for subcontracting to small business multiplied by percentage of actual progress on the contract, up to a maximum of 10% of the given progress payment, shall be withheld from the next progress payment due after a contractor fails to submit a required report. If one or more reports have been submitted before such failure, formula for determining the amount of retainage will be adjusted by deducting any amounts reported as subcontracted to small business from the total dollar amount proposed to be subcontracted and the difference multiplied by the percent of actual progress, up to a maximum of 10% of the given progress payment.
(End of clause)

52.223-9 ESTIMATE OF PERCENTAGE OF RECOVERED MATERIAL CONTENT FOR EPA-DESIGNATED PRODUCTS (AUG 2000)

(a) Definitions. As used in this clause--

Postconsumer material means a material or finished product that has served its intended use and has been discarded for disposal or recovery, having completed its life as a consumer item. Postconsumer material is a part of the broader category of “recovered material.”

Recovered material means waste materials and by-products recovered or diverted from solid waste, but the term does not include those materials and by-products generated from, and commonly reused within, an original manufacturing process.

(b) The Contractor, on completion of this contract, shall--

(1) Estimate the percentage of the total recovered material used in contract performance, including, if applicable, the percentage of postconsumer material content; and

(2) Submit this estimate to US Army Engineer District, Savannah
ATTN: CESAS-CT-C
100 West Oglethorpe Avenue
Savnnah, Georgia 31401
(End of clause)

52.223-4002 U.S. ARMY CORPS OF ENGINEERS SAFETY AND HEALTH REQUIREMENTS MANUAL, EM 385-1-1

This paragraph applies to contracts and purchase orders that require the contractor to comply with EM 385-1-1 (e.g., contracts that include the Accident Prevention clause at FAR 52.236-13 and/or other safety provisions). EM 385-1-1 and its changes are available at http://www.hq.usace.army.mil. (At the HQ homepage, select Safety and Occupational Health.) The Contractor shall be responsible for complying with the current edition and all changes posted on the web through the date that is 10 calendar days prior to the date offers are due. If the solicitation is amended to extend the time set for receipt of offers, the 10 calendar days rule stated above shall be applied against the amended date. (For example, if offers are due on 10 April, all changes posted on or before 31 March shall apply to the contract. If the time for receipt of offers is extended from 10 April to 20 April, all changes posted on or before 10 April shall apply to the contract.)

52.228-4001 RECOMMENDED INSURANCE COVERAGE – MAY 2000

The Design-Build Contractor's attention is invited to the contract requirements concerning "RESPONSIBILITY OF THE CONTRACTOR FOR DESIGN' and 'WARRANTY OF CONSTURCTION WORK". These requirements vest in the Contractor complete responsibility for the professional quality, technical accuracy, and coordination of all design, drawings, specifications and other work or materials furnished by his in-house or consultant forces. The Design-Build Contractor must correct and revise any errors or deficiencies in his work, notwithstanding any review, approval, acceptance or payment by the Government. The Contractor must correct and change any work resulting from his defective design at no additional cost to the Government. The requirements further stipulate that the Design-Build Contractor shall be liable to the Government for the damages to the Government caused by negligent performance. Though it is not am mandatory requirement, this is to recommend that the Design-Build Contractor investigate and obtain appropriate insurance coverage for such liability protection.

(End of Clause)

52.228-4002 REQUIRED INSURANCE (FEB 1987 SAS) (Ref. FAR 28.307)

(a) The Contractor shall procure and maintain during the entire period of his performance under this contract the following minimum insurance:

Comprehensive and Employer's Liability Insurance in the amount required by the State law in which the work is to be performed under this contract.

Comprehensive General Liability Insurance in an amount not less than $500,000 per accident.

Automobile Liability Insurance: $200,000 per person and $500,000 per accident for bodily injury liability and $20,000 property damage liability.

(b) Prior to the commencement of work hereunder, the Contractor shall furnish to the Contracting Officer a certificate or written statement of the above-required insurance. The policies evidencing required insurance shall contain an endorsement to the effect that cancellation, or any material change in the policies adversely affecting the interests of the Government in such insurance, shall not be effective for such period as may be prescribed by the laws of the State in which this contract is to be performed and in no event less than 30 days after written notice thereof to the Contracting Officer.

(c) The Contractor agrees to insert the substance of this clause, including this subparagraph (c), in all subcontracts hereunder.

(End of clause)

52.231-5000 EQUIPMENT OWNERSHIP AND OPERATING EXPENSE SCHEDULE
MAR 1995)--EFARS

(a) This clause does not apply to terminations. See 52.249-5000, Basis for Settlement of Proposals and FAR Part 49.

(b) Allowable cost for construction and marine plant and equipment in sound workable condition owned or controlled and furnished by a contractor or subcontractor at any tier shall be based on actual cost data for each piece of equipment or groups of similar serial and series for which the Government can determine both ownership and operating costs from the contractor's accounting records. When both ownership and operating costs cannot be determined for any piece of equipment or groups of similar serial or series equipment from the contractor's accounting records, costs for that equipment shall be based upon the applicable provisions of EP 1110-1-8, Construction Equipment Ownership and Operating Expense Schedule, Region III. Working conditions shall be

considered to be average for determining equipment rates using the schedule unless specified otherwise by the contracting officer. For equipment not included in the schedule, rates for comparable pieces of equipment may be used or a rate may be developed using the formula provided in the schedule. For forward pricing, the schedule in effect at the time of negotiations shall apply. For retroactive pricing, the schedule in effect at the time the work was performed shall apply.

(c) Equipment rental costs are allowable, subject to the provisions of FAR 31.105(d)(ii) and FAR 31.205-36. Rates for equipment rented from an organization under common control, lease-purchase arrangements, and sale-leaseback arrangements, will be determined using the schedule, except that actual rates will be used for equipment leased from an organization under common control that has an established practice of leasing the same or similar equipment to unaffiliated lessees.

(d) When actual equipment costs are proposed and the total amount of the pricing action exceeds the small purchase threshold, the contracting officer shall request the contractor to submit either certified cost or pricing data, or partial/limited data, as appropriate. The data shall be submitted on Standard Form 1411, Contract Pricing Proposal Cover Sheet.

(End of clause)

52.232-4007 ACCOUNTING AND APPROPRIATION DATA (APR 1989 CESAS-RM)

See Section 00100, Instructions, Conditions, and Notice to Bidders.

(End of clause)

52.232-4008 DESIGNATED BILLING OFFICE (APR 1989 CESAS-RM)

Invoices will be mailed to:

U.S. Army Corps of Engineers
Attn: CESAS-CD-STH (Resident Engineer)
Post Office Box 22684
Savannah, GA 31403

Physical Address:

U.S. Army Corps of Engineers
PB 101, Billy Mitchell Blvd
Hunter AAF, GA 31409

(End of Clause)

52.232-4009 DESIGNATED PAYMENT OFFICE (AUG 1998 CESAS-RM-F)

Payment will be made by:

U.S. Army Corps of Engineers Finance Center
ATTN: CEFC-AO-P
5720 Integrity Drive
Millington, TN 38054-5005

(End of clause)

52.232-5000 PAYMENT FOR MATERIALS DELIVERED OFF-SITE (MAR 1995)--EFARS

(a) Pursuant to FAR clause 52.232-5, Payments Under Fixed Priced Construction Contracts, materials delivered to the contractor at locations other than the site of the work may be taken into consideration in making payments if included in payment estimates and if all the conditions of the General Provisions are fulfilled. Payment for items delivered to locations other than the work site will be limited to: (1) materials required by the technical provisions; or (3) materials that have been fabricated to the point where they are identifiable to an item of work required under this contract.

(b) Such payment will be made only after receipt of paid or receipted invoices or invoices with canceled check showing title to the items in the prime contractor and including the value of material and labor incorporated into the item. In addition to petroleum products, payment for materials delivered off-site is limited to the following items: _____

(End of clause)

52.236-1 PERFORMANCE OF WORK BY THE CONTRACTOR (APR 1984)

The Contractor shall perform on the site, and with its own organization, work equivalent to at least twenty (20) percent of the total amount of work to be performed under the contract. This percentage may be reduced by a supplemental agreement to this contract if, during performing the work, the Contractor requests a reduction and the Contracting Officer determines that the reduction would be to the advantage of the Government.

(End of clause)

52.236-14 AVAILABILITY AND USE OF UTILITY SERVICES (APR 1984)

(a) The Government shall make all reasonably required amounts of utilities available to the Contractor from existing outlets and supplies, as specified in the contract. Unless otherwise provided in the contract, the amount of each utility service consumed shall be charged to or paid for by the Contractor at prevailing rates charged to the Government or, where the utility is produced by the Government, at reasonable rates determined by the Contracting Officer. The Contractor shall carefully conserve any utilities furnished without charge.

(b) The Contractor, at its expense and in a workmanlike manner satisfactory to the Contracting Officer, shall install and maintain all necessary temporary connections and distribution lines, and all meters required to measure the amount of each utility used for the purpose of determining charges. Before final acceptance of the work by the Government, the Contractor shall remove all the temporary connections, distribution lines, meters, and associated paraphernalia.

(End of clause)

52.236-4001 DESIGN-BUILD CONTRACT-ORDER OF PRECEDENCE – AUG 1997

(a) The contract includes the standard contract clauses and schedules current at the time of award. It also entails: (1) the solicitation in its entirety, including all drawings, cuts and illustrations, and any amendments during proposal evaluation and selection, and (2) the successful Offeror’s accepted proposal. The contract constitutes and defines the entire agreement between the Contractor and the Government. No documentation shall be omitted which in any ways bears upon the terms of that agreement.

(b) In the event of conflict or inconsistency between any of the provisions of the various portions of this contract, precedence shall be given in the following order:

(1) Betterments: Any portions of the Offeror's proposal which both meet and exceed the provisions of the solicitation

(2) The provisions of the solicitation. (see also Contract Clause: SPECIFICATIONS AND DRAWINGS FOR CONSTRUCTION.)

(3) All other provisions of the accepted proposal.

(4)Any design products, including but not limited to plans, specifications, engineering studies and analyses, shop drawings, equipment installation drawings, etc. These are "deliverables" under the contract and are not part of the contract itself. Design products must conform to all provisions of the contract, in the order of precedence herein.

(End of Clause)

52.236-4003 RESPONSIBILITY OF THE CONTRACTOR FOR DESIGN – FEB 2000

(a) The Contractor shall be responsible for the professional quality, technical accuracy, and the coordination of all designs, drawings, specifications, and other non-construction services furnished by the Contractor under this contract. The Contractor shall, without additional compensation, correct or revise any errors or deficiency in its designs, drawings, specifications, and other non-construction services and perform any necessary rework or modifications, including any damage to real or personal property, resulting from the design error or omission.

(b) Neither the Government's review, approval or acceptance of, nor payment for, the services required under this contract shall be construed to operate as a waiver of any rights under this contract or of any cause of action arising out of the performance of this contract. The Contractor shall be and remain liable to the Government in accordance wit applicable law for all damages to the Government caused by the Contractor's negligent performance of any of these services furnished under this contract.

(c) The rights and remedies of the Government provided for under this contract are in addition to any other rights and remedies provided by law

(d) If the Contractor is comprised of more than one legal entity shall be jointly and severally liable thereunder.

(End of Clause)

52.236-4004 SEQUENCE OF DESIGN-CONSTRUCTION – AUG 1997

(a) After receipt of the Contract Notice to Proceed (NTP) the Contractor shall initiate design, comply with all design submission requirements as covered under Division 01 General Requirements, and obtain Government review of each submission. No construction may be started, until the Government reviews the Corrected Final Design submission and determines it satisfactory for purposes of beginning construction. The Contracting Officer will notify the Contractor when the design is cleared for construction. The Government will not grant any time extension for any design resubmittal required when, in the opinion of the Contracting Officer, the initial submission failed to meet the minimum quality requirements as set forth in the Contract.

(b) If the Government allows the Contractor to proceed with limited construction based on pending minor revisions to the reviewed Final Design submission, no payment will be made for any in-place construction related to the pending revisions until they are completed, resubmitted and are satisfactory to the Government.

(c) No payment will be made for any in-place construction until all required submittals have been made, reviewed and are satisfactory to the Government.

(End of Clause)

52.236-4005 SEQUENCE OF DESIGN- CONSTRUCTION (FAST TRACK) – AUG 1997

(iii) After receipt of the Contract Notice to Proceed (NTP) the Contractor shall initiate design, comply with all design submissions requirements as covered under Division 01 General Requirements, and obtain Government review of each submission. The contractor may begin construction on portions of the work for which the Government has reviewed the final design submission and has determined satisfactory for purposes of beginning construction. The Contracting Officer will notify the Contractor when the design is cleared for construction. The Government will not grant any time extension for any design resubmittal required when, in the opinion of the Contracting Officer, the initial submission failed to meet the minimum quality requirements as set forth in the Contract.

(iv) If the Government allows the Contractor to proceed with the construction based on pending minor revisions to the reviewed Final Design submission, no payment will be made for any in-place construction related to the pending revisions until they are completed, resubmitted and are satisfactory to the Government.

(v) No payment will be made for any in-place construction until all required submittals have been made, reviewed and are satisfactory to the Government.

(End of Clause)

52.236-4006 CONSTRUCTOR'S ROLE DURING DESIGN – JUN 1998

The Contractor's construction management key personnel shall be actively involved during the design process to effectively integrate the design and construction requirements of this contract. In addition to the typical required construction activities, the constructor's involvement includes, but is not limited to actions such as: integrating the design schedule into the Master Schedule to maximize the effectiveness of fast-tracking design and construction (within the limits allowed in the contract), ensuring constructability and economy of the design, integrating the shop drawing and installation drawing process into the design, executing the material and equipment acquisition programs to meet critical schedules, effectively interfacing the construction QC program with the design QC program, and maintaining and providing the design team with accurate, up-to-date redline and as-built documentation. The Contractor shall require and manage the active involvement of key trade subcontractors in the above activities.

(End of Clause)

52.236-4007 TRAINING – FEB 2000

The Contractor shall provide operational and maintenance training for all systems furnished under this contract for the operating and maintenance personnel. The system manufacturer shall conduct the training, where feasible. All operation and maintenance manuals shall be submitted and approved prior to conducting the training, where feasible. All operation and maintenance manuals shall be submitted and approved prior to conducting the training and shall be used during training. The Contractor shall video tape the training session on VHS tapes and provide the tapes to the Government.

(End of Clause)

52.236-4008 DESIGN CONFERENCES – AUG 1997

(a) Pre-Work: As part of the Pre-Work Conference conducted after contract award, key representatives of the Government and the Contractor will review the design submission and procedures specified herein, discuss the preliminary design schedule and provisions for phase completion of the D-B documents with construction activities (fast tracking), as appropriate, meet with Corps of Engineers Design Review personnel and key Using Agency points of contract and any other appropriate pre-design discussion items.

(b) Design Charette: After award of the contract, the Contractor shall visit the site and conduct extensive interviews, and problem solving discussions with the individual users, base personnel, Corps of Engineers personnel to acquire all necessary site information, review user options, and discuss user needs. The Contractor shall document all discussions. The design shall be finalized as direct result of these meetings.

(c) Design Review Conferences: Review conferences will be held on base for each design submittal. The Contractor will bring the personnel that developed the design submittal to the review conference. The conferences will take place the week after the review is complete.

(End of Clause)

52.236-4009 PARTNERING – FEB 2000

In order to most effectively accomplish this contract, the Government proposes to form a partnership with the Contractor to develop a cohesive building team. It is anticipated that this partnership would involve the Marine and Navy Representatives, Installation Representative, the Contractor, primary subcontractors and designers and the Corps of Engineers. This partnership would strive to develop a cooperative management team drawing on the strengths of each team member in an effort to achieve quality project within budget and on schedule. This partnership would be bilateral in membership and participation will be totally voluntary. Any cost associated with effectuating this partnership, excluding travel and lodging cost of Government personnel, will be borne by each party. The partnering meetings shall be held at Hunter Army Airfield, Georgia.

End of Clause)

52.236-4013 CONTRACTOR-PREPARED NETWORK ANALYSIS SYSTEM
(January 2002 SAS) (Ref. DFARS 236.273)

The progress chart to be prepared by the contractor pursuant to FAR 52.236-15, Schedules for Construction Contracts, shall utilize the Critical Path Method (CPM) of network calculation. (See Attachment 1 to Section 00800).

52.236-4015 PRECONSTRUCTION CONFERENCE (OCT 1988 SAS) (Ref. FAR 36.305)

(a) A preconstruction conference will be arranged by the Area/Resident Engineer after award of contract and before commencement of work. The Area/Resident Engineer will notify the Contractor of the time and date set for the meeting. At this conference, the Contractor shall be oriented with respect to Government procedures and line of authority, contractual, administrative, and construction matters.

(b) The Contractor shall bring to this conference, in completed form, a Certificate of Insurance, plus the following items in either completed or draft form:

Accident Prevention Plan (5 copies)
(use format shown in Attachment 1 to SECTION 00800)
Quality Control Plan (5 copies)
Letter Appointing Superintendent
Transmittal Register
Power of Attorney and Certified Copy of Resolution
Network Analysis System, when applicable
List of Subcontractors

(c) A letter of record will be written documenting all items discussed at the conference, and a copy will be furnished by the Area/Resident Engineer to all in attendance.

(End of clause)

52.236-4016 VIDEO TAPING OPERATING AND MAINTENANCE INSTRUCTIONS (MAR 1987 SASCD-SQ)

For all of the operating and maintenance instructions which are required in the contract specifications, the Contractor shall video tape these instructions as they are presented to the Government representatives.
These tapes shall provide clear and understandable detailed instructions for all items required by the contract specifications. The tapes shall be prepared by an experienced video director/cameraman using good quality half-inch VHS color tape with correct sound equipment, lighting, and backdrop. The sound and picture quality shall be high and subject to approval by the Contracting Officer. The tapes are intended as followup training for other Government representatives at a later date. They must be suitable for this purpose. The Contractor shall be responsible for the contents of the instructions and shall verify that they are correct prior to taping. The Contractor may submit individual equipment manufacturer's instructional tape(s), provided they meet the above qualifications and cover the actual equipment that is installed. The tape(s) shall be for specific equipment identified by contents and contract name and number. The Contractor shall submit one copy of the tape(s) to the Contracting Officer for review and approval. Unacceptable tapes are to be corrected by the Contractor as indicated by the Contracting Officer at no additional cost to the Government.

(End of clause)

52.236-4017 SUBMITTAL OF MODIFICATION COST ESTIMATE PROPOSALS (MAR 1992 SAS)
(Ref. DFARS 52.236-7000)

When submittals of Cost Estimate Proposals are required for additions or deletions to work under this contract by modification, the Contractor shall use DA Form 5418-R titled "Cost Estimate Analysis" (see Attachment 1 to SECTION 00800). A separate assemblage will be prepared for submittal by each trade affected by the proposed work.
(End of clause)

52.244-4001 KEY PERSONNEL, SUBCONTRACTORS AND OUTSIDE ASSOCIATES OR CONSULTANTS – AUG 1997

In connection with the services covered by this contract, any in-house personnel, subcontractors, and outside associates or consultants will be limited to the individuals or firms that were specifically identified and agreed to during negotiations. The contractor shall obtain the Contracting Officer's written consent before making any substitution for these designated in-house personnel, subcontractors, associates, or consultants.

(End of Clause)

52.246-12 INSPECTION OF CONSTRUCTION (AUG 1996)

(a) Definition. "Work" includes, but is not limited to, materials, workmanship, and manufacture and fabrication of components.

(b) The Contractor shall maintain an adequate inspection system and perform such inspections as will ensure that the work performed under the contract conforms to contract requirements. The Contractor shall maintain complete inspection records and make them available to the Government. All work shall be conducted under the general direction of the Contracting Officer and is subject to Government inspection and test at all places and at all reasonable times before acceptance to ensure strict compliance with the terms of the contract.

(c) Government inspections and tests are for the sole benefit of the Government and do not--

(1) Relieve the Contractor of responsibility for providing adequate quality control measures;

(2) Relieve the Contractor of responsibility for damage to or loss of the material before acceptance;

(3) Constitute or imply acceptance; or

(4) Affect the continuing rights of the Government after acceptance of the completed work under paragraph (i) of this section.

(d) The presence or absence of a Government inspector does not relieve the Contractor from any contract requirement, nor is the inspector authorized to change any term or condition of the specification without the Contracting Officer's written authorization.

(e) The Contractor shall promptly furnish, at no increase in contract price, all facilities, labor, and material reasonably needed for performing such safe and convenient inspections and tests as may be required by the Contracting Officer. The Government may charge to the Contractor any additional cost of inspection or test when work is not ready at the time specified by the Contractor for inspection or test, or when prior rejection makes reinspection or retest necessary. The Government shall perform all inspections and tests in a manner that will not unnecessarily delay the work. Special, full size, and performance tests shall be performed as described in the contract.

(f) The Contractor shall, without charge, replace or correct work found by the Government not to conform to contract requirements, unless in the public interest the Government consents to accept the work with an appropriate adjustment in contract price. The Contractor shall promptly segregate and remove rejected material from the premises.

(g) If the Contractor does not promptly replace or correct rejected work, the Government may (1) by contract or

otherwise, replace or correct the work and charge the cost to the Contractor or (2) terminate for default the Contractor's right to proceed.

(h) If, before acceptance of the entire work, the Government decides to examine already completed work by removing it or tearing it out, the Contractor, on request, shall promptly furnish all necessary facilities, labor, and material. If the work is found to be defective or nonconforming in any material respect due to the fault of the Contractor or its subcontractors, the Contractor shall defray the expenses of the examination and of satisfactory reconstruction. However, if the work is found to meet contract requirements, the Contracting Officer shall make an equitable adjustment for the additional services involved in the examination and reconstruction, including, if completion of the work was thereby delayed, an extension of time.

(i) Unless otherwise specified in the contract, the Government shall accept, as promptly as practicable after completion and inspection, all work required by the contract or that portion of the work the Contracting Officer determines can be accepted separately. Acceptance shall be final and conclusive except for latent defects, fraud, gross mistakes amounting to fraud, or the Government's rights under any warranty or guarantee.

(End of clause)

52.246-4001 WARRANTY OF CONSTRUCTION WORK – AUG 1997

(a) In addition to any other warranties in this contract, the Contractor warrants, except as provided in paragraph (1) of this clause, that work performed under this contract conforms to the contract requirements and is free of any defect in equipment, material, or workmanship performed by the Contractor or any subcontractor or supplier at any tier.

(b) This warranty shall contain for a period of year from the date of final acceptance of the work. If the Government takes possession of any part of the work before final acceptance, this warranty shall continue for a period of 1 year from the date the Government takes possession.

(c) The Contractor shall remedy at the Contractor’s expense any failure to conform, or any defect. In addition, the Contractor shall remedy at the Contractor’s expense any damage to Government-owned or controlled real or personal property, when that damage is the result of –

(1) The Contractor’s failure to conform to contract requirements; or

(2) Any defect of equipment, material, or workmanship.

(d) The Contractor shall restore any work damaged in fulfilling the terms and conditions of this clause. The Contractor’s warranty with respect to work repaired or replaced will run for 1 year from the date of repair or replacement.

(e) The Contracting Officer shall notify the Contractor, in writing, within a reasonable time after the discovery of any failure, defect, or damage.

(f) If the Contractor fails to remedy any failure, defect, or damage within a reasonable time after receipt of notice, the Government shall have the right to replace, repair, or otherwise remedy the failure, defect, or damage at the Contractor’s expense.

(g) With respect to all warranties, express or implied, from subcontractors, manufacturers, or suppliers for work performed and materials furnished under this contract, the Contractor shall –

(1) Obtain all warranties that would be given in normal commercial practice:

(2) Require all warranties to be executed, in writing for the benefit of the Government, if directed by the Contracting Officer; and

(3)Enforce warranties for the benefit of the Government, if directed by the Contracting Officer.

(h) In the event the Contractor's warranty under paragraph (b) of this clause has expired, the Government may bring suit at its expense to enforce a subcontractor's, manufacturer's or supplier's warranty.

(i) Unless a defect is caused by the negligence of the Contractor or subcontractor or supplier at any tier, the Contractor shall not be liable for the repair of any defects of material furnished by the Government nor for the repair of any damage that results from any defect in Government-furnished material or design.

(j) This warranty shall not limit the Government's rights under the Inspection and Acceptance clause of this contract with respect to latent defects, gross mistakes, or fraud.

(End of Clause)

52.248-4003 VALUE ENGINEERING AFTER AWARD

(xiv) In reference to Contract Clause 52.248-3, "Value Engineering – Construction", the Government may refuse to entertain a "Value Engineering Change Proposal" (VECP) for those "performance oriented" aspects of the Solicitation documents which were addressed in the Contractor's accepted contract proposal and which were evaluated in competition with other offerors for award of this contract.

(xv) The Government may consider a VECP for those "prescriptive" aspects of the Solicitation documents, not addressed in the Contractor's accepted contract proposal or addressed but evaluated only for minimum conformance with the Solicitation requirements.

(xvi) For purposes of this clause, the term "performance oriented" refers to those aspects of the design criteria or other contract requirements which allow the Offeror or Contractor certain latitude, choice of and flexibility to propose in its accepted contract offer a choice of design, technical approach, design solution, construction approach or other approach to fulfil the contract requirements. Such requirements generally tend to be expressed in terms of functions to be performed, performance required or essential physical characteristics, without dictating a specific process or specific design solution for achieving the desired result.

(xvii) In contrast, for purposes of this clause, the term "prescriptive" refers to those aspects of the design criteria or other Solicitation requirements wherein the Government expressed the design solution or other requirements in terms of specific materials, approaches, systems and/or processes to be used. Prescriptive aspects typically allow the Offerors little or no freedom in the choice of design approach, materials, fabrication techniques, methods of installation or other approach to fulfill the contract requirements.

(End of Clause)

52.249-4001 TIME EXTENSIONS FOR UNUSUALLY SEVERE WEATHER (APR 1991 OCE)
(Ref. FAR 52.249-10)

(a) This provision specifies the procedure for the determination of time extensions for unusually severe weather in accordance with the contract clause entitled DEFAULT (FIXED-PRICE CONSTRUCTION). In order for the Contracting Officer to award a time extension under this clause, the following conditions must be satisfied:

(1) The weather experienced at the project site during the contract period must be found to be unusually severe, that is, more severe than the adverse weather anticipated for the project location during any given month.

(2) The unusually severe weather must actually cause a delay to the completion of the project. The delay must be beyond the control and without the fault or negligence of the Contractor.

(b) The following schedule of monthly anticipated adverse weather delays is based on National Oceanic and Atmospheric Administration (NOAA) or similar data for the project location and will constitute the base line for monthly weather time evaluations. The Contractor's progress schedule must reflect these anticipated adverse weather delays in all weather dependent activities.

MONTHLY ANTICIPATED ADVERSE WEATHER DELAY
WORKDAYS BASED ON 5-DAY WORK WEEK

JAN	FEB	MAR	APR	MAY	JUN	JUL	AUG	SEP	OCT	NOV	DEC
6	6	5	4	5	7	9	8	5	2	3	6

(c) Upon acknowledgment of the Notice to Proceed and continuing through-out the contract, the Contractor will record on the daily Contractor Quality Control report the occurrence of adverse weather and resultant impact to normally scheduled work. Actual adverse weather delay days must prevent work on critical activities for 50 percent or more of the Contractor's scheduled workday. The number of actual adverse weather delay days shall include days impacted by actual adverse weather (even if adverse weather occurred in previous month), be calculated chronologically from the first to the last day in each month, and be recorded as full days. If the number of actual adverse weather delay days exceeds the number of days anticipated in paragraph (b) above, the Contracting Officer will convert any qualifying delays to calendar days, giving full consideration for equivalent fair weather workdays, and issue a modification in accordance with the contract clause entitled DEFAULT (FIXED PRICE CONSTRUCTION).

(End of clause)

52.249-5000 BASIS FOR SETTLEMENT OF PROPOSALS - EFARS

Actual costs will be used to determine equipment costs for a settlement proposal submitted on the total cost basis under FAR 49.206-2(b). In evaluating a terminations settlement proposal using the total cost basis, the following principles will be applied to determine allowable equipment costs:

Actual costs for each piece of equipment, or groups of similar serial or series equipment, need not be available in the contractor's accounting records to determine total actual equipment costs. If equipment costs have been allocated to a contract using predetermined rates , those charges will be adjusted to actual costs.

(3) Recorded job costs adjusted for unallowable expenses will be used to determine equipment operating expenses.

(4) Ownership costs (depreciation) will be determined using the contractor's depreciation schedule (subject to the provisions of FAR 31.205-11).

(5) License, taxes, storage and insurance costs are normally recovered as an indirect expense and unless the contractor charges these costs directly to contracts, they will be recovered through the indirect expense rate.

(End of Clause)

ATTACHMENT 1 TO SECTION 00800

LIST OF ATTACHMENTS

1. Contract Drawings: File No. 171-15-01, Sheets 1 through 29

2. Rates of Wages:

3. Formats:

   Sign

   Project Sign Legend Defined

   Corps of Engineers Logo

   Accident Prevention Plan (Ref. FAR 52.236-13 and EM 385-1-1)

   Construction Quality Control Report

   Small and Disadvantaged Business Subcontracting Plan

   Weekly Temporary Electrical Inspection

4. Minimum Standard for Temporary Electrical Service (Ref. FAR 52.236-14)

5. Forms:

   SAS Form 9 - Activity Hazard Analysis

   SAD Form 1666a-R - Safety Checklist for Crawler, Truck & Wheel Mounted Cranes

   SAD Form 1666b-R - Safety Checklist for Portal, Tower, and Pillar Cranes

   SAD Form 1666c-R - Safety Checklist for Rigging

   SAD Form 1666d-R - Safety Checklist for Motor Vehicles, Trailers and Trucks

   SAD Form 1666e-R - Safety Checklist for Crawler Tractors and Dozers

   SAD Form 1666f-R - Safety Checklist for Scrapers, Motor Graders, and Other Mobile Equipment

   SAD Form 1666g-R - Safety Checklist for Material Hoists

   SAD Form 1666h-R - Safety Checklist for Earth Drilling Equipment

   ENG Form 4025 - Transmittal of Shop Drawings, Equipment Data, Material Samples, or Manufacturer's Certificates of Compliance

   DA Form 5418-R - Cost Estimate Analysis

   Standard Form LLL-A - Disclosure of Lobbying Activities

   Real Property Inventory

General Decision Number GA020004

General Decision Number **GA020004**
Superseded General Decision No. GA010004
State: **Georgia**
Construction Type:
BUILDING
County(ies):
CHATHAM
BUILDING CONSTRUCTION PROJECTS (does not include residential construction consisting of single family homes and apartments up to and including 4 stories)

Modification Number	Publication Date
0	03/01/2002
1	02/28/2003
2	03/07/2003
3	04/18/2003

COUNTY(ies):
CHATHAM

BOIL0026A 01/01/2003

	Rates	Fringes
BOILERMAKER	25.30	11.29

---

* ELEC0508A 09/01/2002

	Rates	Fringes
ELECTRICIANS:		
Instrumentation Technician	20.00	5.20
Nuclear Work	21.75	5.20
Journeyman Wireman	15.35	5.20

IRON0709A 01/01/2003

	Rates	Fringes
IRONWORKERS, REINFORCING & STRUCTURAL:		
General contracts of $5,000,000 or more, or work performed on a nuclear facility	18.90	5.67
General contracts below $5,000,000	17.40	5.67

SUGA1004A 03/01/1988

	Rates	Fringes
ASPHALT RAKER	6.75	
BRICKLAYER	11.00	
CARPENTER (excluding drywall hanger & insulator)	10.04	
CEMENT MASON	9.95	
LABORER	5.53	
MASON TENDER	5.50	
PAINTER (excluding drywall finisher)	9.54	
PIPEFITTER	12.78	
PLASTERER	9.00	
PLUMBER	11.09	
ROOFER	7.03	
SHEET METAL WORKER	8.29	
TRUCK DRIVER	6.75	

WELDERS - Receive rate prescribed for craft performing operation to which welding is incidental.

==========

Unlisted classifications needed for work not included within the scope of the classifications listed may be added after award only as provided in the labor standards contract clauses (29 CFR 5.5(a)(1)(ii)).

In the listing above, the "SU" designation means that rates listed under that identifier do not reflect collectively bargained wage and fringe benefit rates. Other designations indicate unions whose rates have been determined to be prevailing.

WAGE DETERMINATION APPEALS PROCESS

1.) Has there been an initial decision in the matter? This can be:

* an existing published wage determination
* a survey underlying a wage determination
* a Wage and Hour Division letter setting forth a position on a wage determination matter
* a conformance (additional classification and rate) ruling

On survey related matters, initial contact, including requests for summaries of surveys, should be with the Wage and Hour Regional Office for the area in which the survey was conducted because those Regional Offices have responsibility for the Davis-Bacon survey program. If the response from this initial contact is not satisfactory, then the process described in 2.) and 3.) should be followed.

With regard to any other matter not yet ripe for the formal process described here, initial contact should be with the Branch of Construction Wage Determinations. Write to:

Branch of Construction Wage Determinations
Wage and Hour Division
U. S. Department of Labor
200 Constitution Avenue, N. W.
Washington, D. C. 20210

2.) If the answer to the question in 1.) is yes, then an interested party (those affected by the action) can request review and reconsideration from the Wage and Hour Administrator (See 29 CFR Part 1.8 and 29 CFR Part 7). Write to:

Wage and Hour Administrator
U.S. Department of Labor
200 Constitution Avenue, N. W.
Washington, D. C. 20210

The request should be accompanied by a full statement of the interested party's position and by any information (wage payment data, project description, area practice material, etc.) that the requestor considers relevant to the issue.

3.) If the decision of the Administrator is not favorable, an interested party may appeal directly to the Administrative Review Board (formerly the Wage Appeals Board). Write to:

Administrative Review Board
U. S. Department of Labor
200 Constitution Avenue, N. W.
Washington, D. C. 20210

4.) All decisions by the Administrative Review Board are final.

END OF GENERAL DECISION

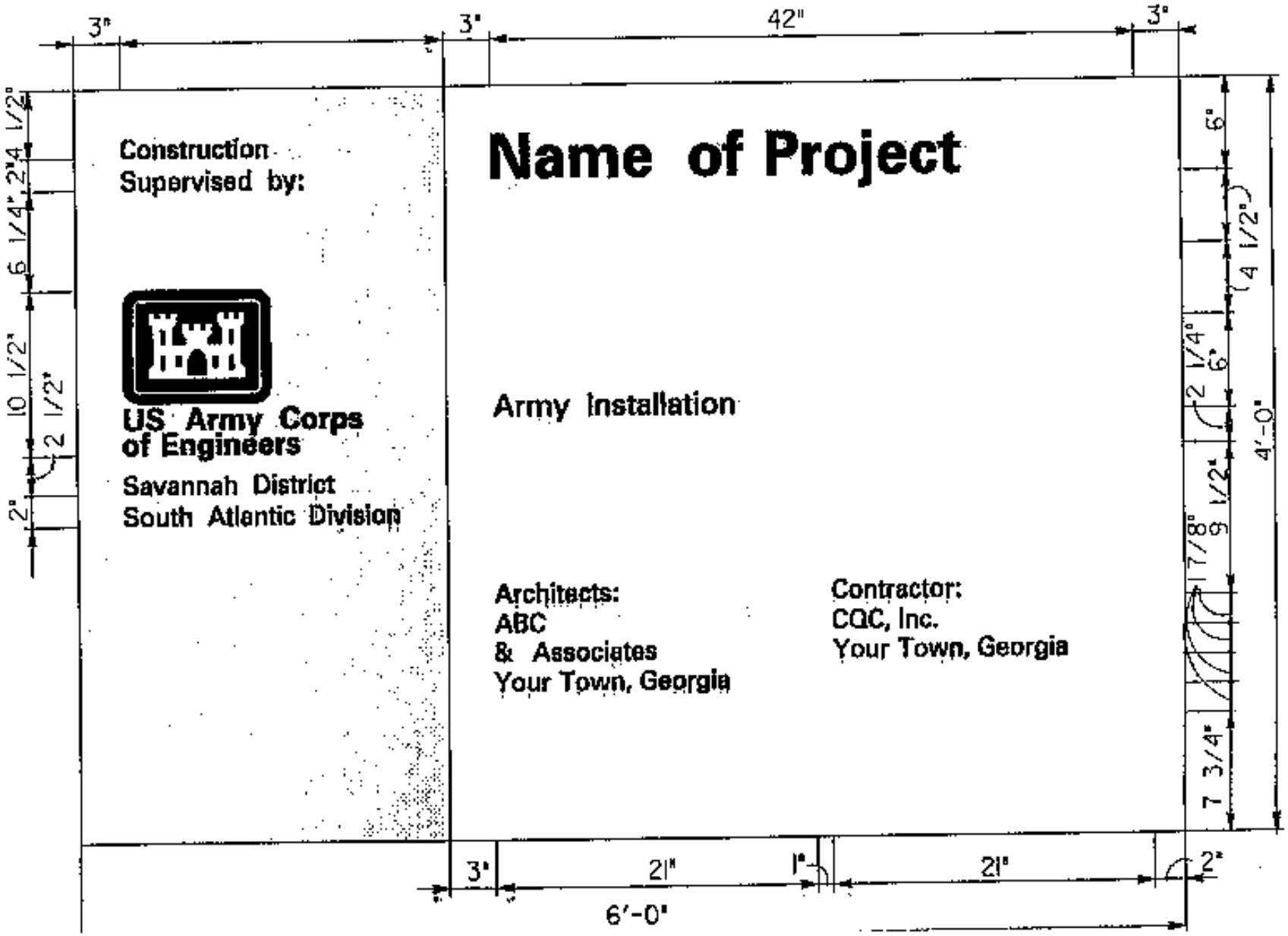
3"
3"
42"
3"
Construction
Supervised by:
US Army Corps
of Engineers
Savannah District
South Atlantic Division
Name of Project
Army Installation
Architects:
ABC
& Associates
Your Town, Georgia
Contractor:
CQC, Inc.
Your Town, Georgia
6"
4 1/2"
2 1/4"
6"
9 1/2"
7 3/4"
4'-0"
2 1/2"
10 1/2"
6 1/4"
4 1/2"
2"
3"
21"
1"
21"
2"
6'-0"

PROJECT SIGN LEGEND DEFINED

Legend Group 1: The words:

"Construction Supervised by:" or "Design and Construction Supervised by:"

shall be placed on two lines using black, 1.25" Helvetica regular typeface. Maximum line length is 19".

10.5" Reverse Signature: The Corps symbol shall be a 10.5" white reverse signature using a 6" castle on a red background. The castle and surrounding border lines shall be white. The castle windows, door, and logo background are to be red. The words "U.S. Army Corps of Engineers" shall be black.

Legend Group 2: The words:

"Savannah District
South Atlantic Division"

shall be placed on two lines below the 10.5" reverse signature, using black, 1.25" Helvetica regular typeface.

Legend Group 3: The "Name of Project" shall be placed on one to three lines using white 3" Helvetica bold typeface. Maximum line length is 42".

Legend Group 4: The "Army Installation" shall be a one or two line identification of the facility or name of the sponsoring department. Lettering is to be white, 1.5" Helvetica regular typeface. Maximum line length is 42".

NOTE: Cross-align the first line of legend group 4 with the first line of the Corps signature (U.S. Army Corps) as shown.

Legend Group 5a: The words:

"Architects:" or "Engineers:" or "Architect-Engineers:"

shall be a one to five line identification of the prime architect or engineering corporate or firm name, city, and State. Lettering shall be white, 1.25" Helvetica regular typeface. Maximum line length is 21".

Legend Group 5b: The "Contractor:" shall be a one to five line identification of the prime Contractor corporate or firm name, city, and State. Include type of Contractor, i.e. General Contractor, etc. Lettering shall be white, 1.25" Helvetica regular typeface. Maximum line length is 21".

NOTE: All typography shall be flush left and rag right, upper and lower case with initial capitals only as shown.

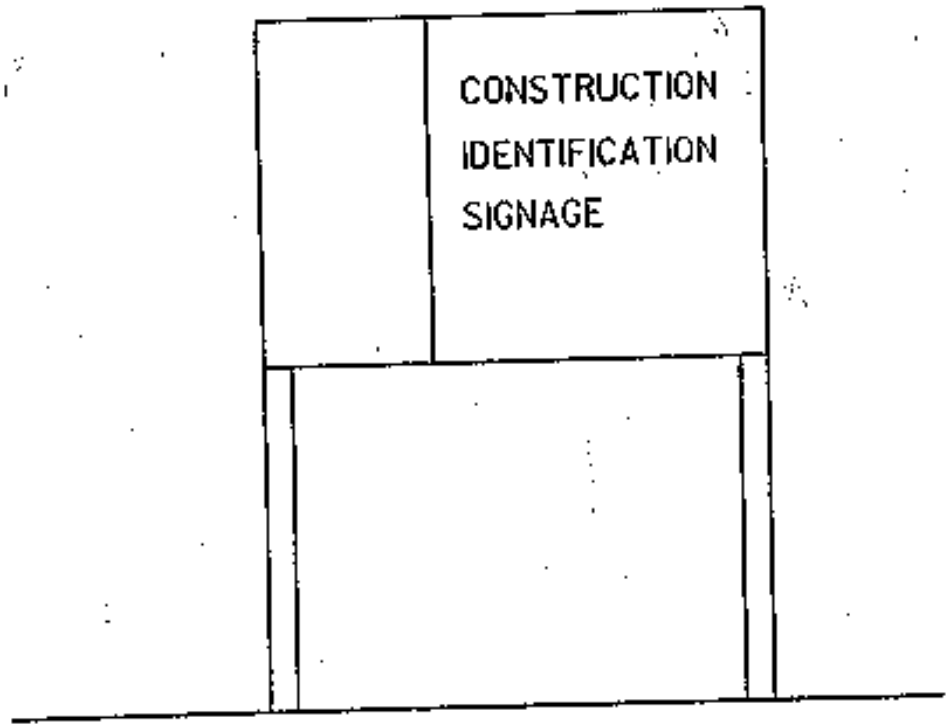
CONSTRUCTION
IDENTIFICATION
SIGNAGE

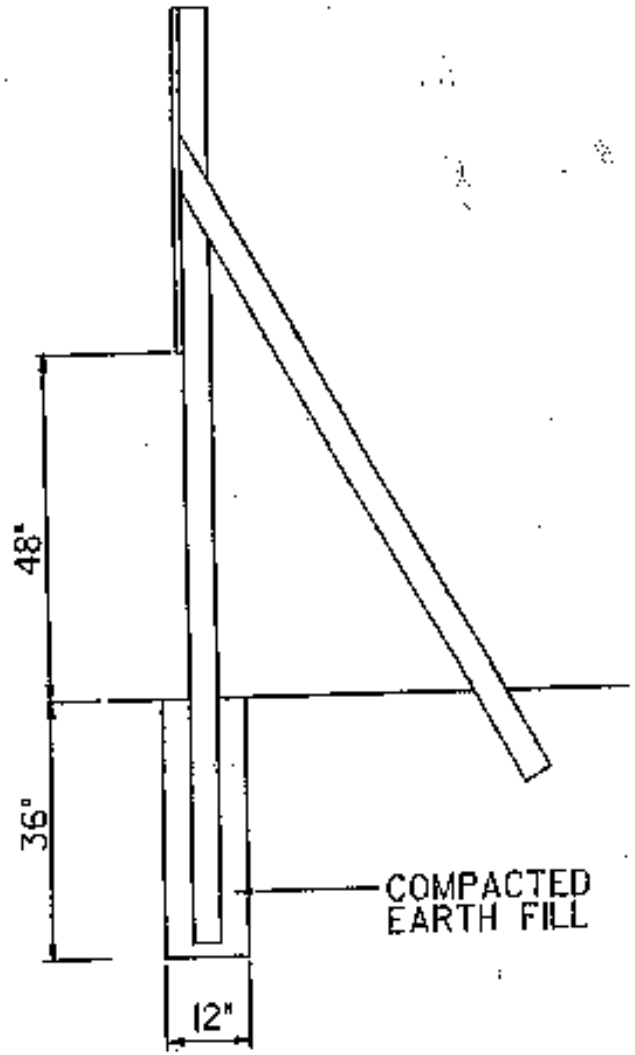
48"
36"
12"
COMPACTED
EARTH FILL

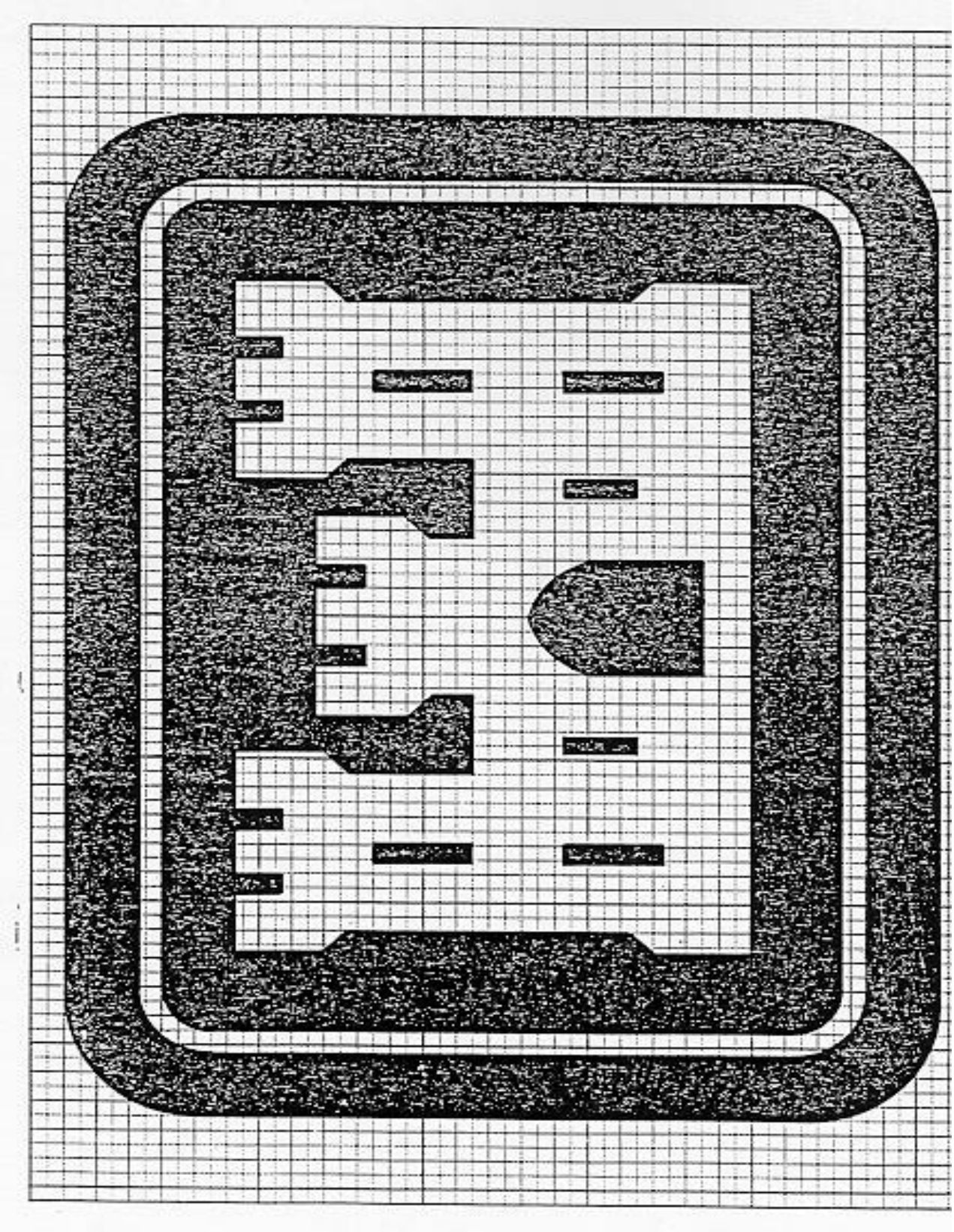

CORPS OF ENGINEERS LOGO
HALF SIZE

Last revised 9 May 97

FORMAT
(Ref. FAR 52.236-13 and EM 385-1-1 dated 3 Sep 96)
ACCIDENT PREVENTION PLAN

MINIMUM BASIC OUTLINE FOR ACCIDENT PREVENTION PLAN

An accident prevention plan is, in essence, a safety and health policy and program document. The following areas are typically addressed in an accident prevention plan, but a plan shall be job specific and shall also address any unusual or unique aspects of the project or activity for which it is written. The accident prevention plan shall interface with the employer's overall safety and health program. Any portions of the overall safety and health program that are referenced in the accident prevention plan shall be included as appropriate.

1. SIGNATURE SHEET. Title, signature, and phone number of the following:

a. Plan preparer (corporate safety staff person, QC);

b. Plan approval, e.g., owner, company president, regional vice president (HTRW activities require approval of a Certified Industrial Hygienist (or qualified Industrial Hygiene personnel for in-house USACE activities; a Certified Safety Professional (or qualified USACE safety personnel for in-house work) may approve the plan for operations involving UST removal where contaminants are known to be petroleum, oils, or lubricants);

c. Plan concurrence (provide concurrence of other applicable corporate and project personnel (contractor)), e.g., Corporate Chief of Operations, Corporate Chief of Safety, Corporate Industrial Hygienist, project manager or superintendent, project safety professional, project QC. The plan will be developed by qualified personnel (plan preparer) and will be signed by a competent person (plan concurrence) and a representative of the prime contractor's project management team (plan approval).

2. BACKGROUND INFORMATION. List the following:

a. Contractor;

b. Contract number;

c. Project name;

d. Brief project description, description of work to be performed, and location (map);

e. Contractor accident experience (provide information such as EMR, OSHA 200 Forms, corporate safety trend analyses);

f. Listing of phases of work and hazardous activities requiring activity hazards analyses.

3. STATEMENT OF SAFETY AND HEALTH POLICY. (In addition to the corporate policy statement, a copy of the corporate safety program may provide a

significant portion of the information required by the accident prevention plan.)

4. RESPONSIBILITIES AND LINES OF AUTHORITIES.

a. Identification and accountability of personnel responsible for safety - at both corporate and project level (contracts specifically requiring safety or industrial hygiene personnel should include a copy of their resume - the District Safety and Occupational Health Office will review the qualifications for acceptance). For items in EM 385-1-1 which require the use of a competent person or a qualified person, the contractor is to maintain documentation demonstrating the competence or qualification of that individual.

b. Lines of authority

5. SUBCONTRACTORS AND SUPPLIERS. Provide the following:

a. Identification of subcontractors and suppliers (if known);

b. Means for controlling and coordinating subcontractors and suppliers;

c. Safety responsibilities of subcontractors and suppliers.

6. TRAINING.

a. List subjects to be discussed with employees in safety indoctrination.

b. List mandatory training and certifications which are applicable to this project (e. g., explosive actuated tools, confined space entry, crane operator, diver, vehicle operator, HAZWOPER training and certification, personal protective equipment) and any requirements for periodic retraining/recertification.

c. Identify requirements for emergency response training.

d. Outline requirements (who attends, when given, who will conduct etc.) for supervisory and employee safety meetings.

e. Identify location at the project site where the records will be maintained.

7. SAFETY AND HEALTH INSPECTIONS. Provide details on:

a. Who will conduct safety inspections (e.g., project manager, safety professional, QC, supervisors, employees, etc.), when inspections will be conducted, how the inspections will be recorded, deficiency tracking system, follow-up procedures, etc;

b. Any external inspections/certifications which may be required (e.g., Coast Guard).

8. SAFETY AND HEALTH EXPECTATIONS, INCENTIVE PROGRAMS, AND COMPLIANCE.

a. The company's written safety program goals, objectives, and accident experience goals for this contract should be provided.

b. A brief description of the company's safety incentive programs (if any) should be provided.

c. Policies and procedures regarding noncompliance with safety requirements (to include disciplinary actions for violation of safety requirements) should be identified.

d. Provide written company procedures for holding managers and supervisors accountable for safety.

9. ACCIDENT REPORTING. The contractor shall identify who shall complete the following, how, and when:

a. Exposure data (man-hours worked);

b. Accident investigations, reports and logs;

c. Immediate notification of major accidents.

10. MEDICAL SUPPORT. Outline on-site medical support and off-site medical arrangements.

11. PERSONAL PROTECTIVE EQUIPMENT. Outline procedures (who, when, how) for conducting hazard assessments and written certifications for use of personal protective equipment.

12. PLANS (PROGRAMS, PROCEDURES) REQUIRED BY THE SAFETY MANUAL (as applicable).

a. Hazard communication program (01.B.04);

b. Emergency response plans:
- procedures and tests (01.E.01)
- spill plans (01.E.01, 06.A.02)
- fire fighting plan (01.E.01, 19.A.04)
- posting of emergency telephone numbers (01.E.04)
- wildfire prevention plan (09.K.01)
- man overboard/abandon ship (19.A.04)

c. Layout plans (04.A.01);

d. Respiratory protection plan (05.E.01);

e. Health hazard control program (06.A.02);

f. Lead abatement plan (06.B.05 & specifications);

g. Asbestos abatement plan (06.B.05 & specifications);

h. Abrasive blasting (06.H.01);

i. Confined space (06.1);

j. Hazardous energy control plan (12.A.07);

k. Critical lift procedures (16.C.17);

l. Contingency plan for severe weather (19.A.03);

m. Access and haul road plan (22.1.10);

n. Demolition plan (engineering and asbestos surveys) (23.A.01);

o. Emergency rescue (tunneling) (26.A.05);

p. Underground construction fire prevention and protection plan (26.D.01);

q. Compressed air plan (26.1.01);

r. Formwork and shoring erection and removal plans (27.B.02);

s. Lift slab plans (27.D.01);

t. SHP and SSHP (for HTRW work an SSHP must be submitted and shall contain all information required by the accident prevention plan - two documents are not required (28.B.01);

u. Blasting plan (29.A.01);

v. Diving plan (30.A.13);

w. Plan for prevention of alcohol and drug abuse (Defense Federal Acquisition Regulation Supplement Subpart 252.223-7004, Drug-Free Work Force).

13. The Contractor shall provide information on how they will meet the requirements of major sections of EM 385-1-1 in the accident prevention plan. Particular attention shall be paid to excavations, scaffolding, medical and first aid requirements, sanitation, personal protective equipment, fire prevention, machinery and mechanized equipment, electrical safety, public safety requirements, and chemical, physical agent, and biological occupational exposure prevention requirements. Detailed site-specific hazards and controls shall be provided in the activity hazard analysis for each phase of the operation. Site-specific hazards are those hazards which would be reasonably be anticipated to occur on the construction site of concern and will be identified through analysis of the activities to be performed. The controls are measures which will be implemented by the contractor to eliminate or reduce each hazard to an acceptable level.

F O R M A T

CONTRACTOR'S NAME
(Address)

CONSTRUCTION QUALITY CONTROL REPORT

Date: _____ Report No. _____

Contract No.: _____

Description and Location of Work: _____

WEATHER: (Clear)(P. Cloudy)(Cloudy); Temperature:___Min,___Max;
Rainfall ___Inches

Contractor/Subcontractors and Area of Responsibility
a._____
b._____
c._____
d._____
e._____
f._____
g._____
h._____

1. Work Performed Today:

(Indicate location and description of work performed. Refer to work performed by prime and/or subcontractors by letter in table above.)

_____

2. Results of Control Activities:

(Indicate whether: P-Preparatory, I-Initial, or F-Followup and include satisfactory work completed or deficiencies with action to be taken.)

_____

3. Test Required by Plans and/or Specifications Performed and Results of Tests:

_____

4. Monitoring of Materials and Equipment:

---

5. Offsite Surveillance Activities:

---

6. Job Safety:

(Daily comment required.)

---

7. Remarks:

a. (Cover any conflicts in plans, specifications or instructions.)

b. (Action taken in review of submittal.)

c. (Verbal instructions received.)

_____
Inspector

CONTRACTOR'S VERIFICATION:

The above report is complete and correct and all material and equipment used and work performed during this reporting period are in compliance with the contract plans and specifications except as noted above.

_____
Contractor's Approved
Authorized Representative

SAMPLE

SMALL AND DISADVANTAGED BUSINESS SUBCONTRACTING PLAN

BETTER BUILDERS, INC.

DATE: February 11, 2003

SOLICITATION NO. DACA21-0X-X-XXXX

TITLE: Barracks Complex, Fort Swampy, Georgia

Type of Work: Design and Construction

In accordance with applicable contract clauses of the solicitation noted above, Better Builders, Inc. submits the following Small Business Subcontracting Plan (includes small, veteran-owned small business, service-disabled veteran-owned small business, HUBZone small business, small disadvantaged business, and women-owned small business concerns).

It is company policy to follow all public laws including P.L. 99-661, Section 1207, P.L. 100-180, Section 806, P.L. 105-135 and P.L. 106-50. We have informed all purchasers to follow these laws in hiring subcontractors and buying materials.

1. The following goals (expressed in terms of percentages of the total dollars available for subcontract/purchase order award) would be applicable to a contract awarded under the cited solicitation. You must also provide the dollar amounts for each of the goals listed below.

    a. Total Proposed Contract Amount: $26,961,000

    b. Total amount available for Subcontract award: $18,300,000

    c. Large Business: $7,832,400 – 42.8%

    d. Total amount to be subcontracted to all small business: $10,467,600 - 57.2%

    e. Small Disadvantaged Business: $1,628,700 – 8.9%

    f. Women-Owned Small Business: $1,482,300 – 8.1%

    g. Service-Disabled Veteran-Owned Small Business: $549,000 - 3%

    h. HUBZone Small Business: $549,000 – 3%

i. There are no options in this solicitation. ***(NOTE: If there are options in the solicitation you must provide the same information as listed in paragraph 1 a-h for each option year/period.)***

j. Indirect and overhead costs have not been included in the goals specified in this section for amounts available for subcontract/purchase order award.

k. Consideration was given to HCBU/MI's but no opportunities were found to be included in the small disadvantaged business goals.

NOTE: While Savannah District does not have a specific goal for subcontracting with Veteran-Owned small business, it must be addressed in any subcontracting plan. However, FAR 52.219-9 requires a goal in your subcontracting plan for Veteran-Owned small business concerns.

2. The following principal products and/or services will be subcontracted under this contract, and the distribution among all small business concerns are as follows:

Large Business - Earthwork
Small Business - Windows and Storm Doors, Recreation, Site Utilities Plumbing
Veteran Owned Small Business – Materials, Equipment
Service Disabled Veteran Owned Small Business – Asphalt, Electrical, Doors
HUBZone Small Business - Window Treatment, HVAC, Concrete
Small Disadvantaged Business - Vinyl Siding, Insulation, Gutters
Women Owned Small Business – Carpentry, Ceramic Tile, Fencing

NOTE: Company names should be provided for each product and/or service listed.

The following method was used in developing our subcontracting goals: (1) all areas of potential subcontract work were determined to be available for subcontract award to all types of small business concerns, and (2) will be actively recruited for participation through the many sources described hereinafter.

3. The following individual will administer this Subcontract Plan on behalf of Better Builders, Inc.:

Name: Freddie Better Title: Executive Vice President

Address and Telephone Number: 4845 Tonka Drive
Fair Haven, CT 27413
800-621-4845

The individual's specific duties with regard to the conduct of our firm's Subcontracting Plan will include, but will not be limited to the following:

a. Developing and maintaining bidders lists of all types of small business concerns using sources such as the Pronet System developed by the Small Business Administration, the Minority Business Development Agency of the U.S. Department of Commerce, Local Minority Business Development Centers and Minority Contractor Associations, and the General Business Services Center in the project's Standard Metropolitan Statistical Area.

b. Assuring the inclusion of all types of small business concerns in all solicitations for products or services which they are capable of providing; and ensuring that all solicitations are structured to permit the maximum possible participation by all types of small business concerns.

c. Establishing and maintaining records of all solicitations and subcontract awards to all types of small business concerns to ensure that the members of the firm who review bidders proposals document their reasons for selecting or not selecting a bid.

d. Preparing and submitting the Subcontracting Report for Individual Contracts (SF 294) and the Summary Subcontract Report (SF 295) in accordance with the instructions provided on the forms, and coordinating and preparing for all compliance reviews by Federal agencies.

e. Conducting or arranging for all other activities necessary to further the intent and attainment of goals of the Plan to include motivational training of the firm's purchasing personnel attendance at workshop, seminars and trade fairs conducted by or on behalf of all types of small business concerns, and general cooperation with members of these concerns or their representatives.

4. The following steps will be taken to ensure that all types of small business concerns receive notice and have an equitable opportunity to compete for intended awards of subcontracts and/or purchase orders for the products and/or services described in paragraph 2 above:

a. Sources will be requested through the SBA's ProNet system, business development organizations, small business trade associations and at small business procurement conferences; sources will be contacted and bidding materials will be provided to all respond ing parties with interest.

b. Internally, motivational training will be conducted to guide and encourage purchasing personnel; source lists and guides to all types of small business concerns will be maintained and utilized by purchasing personnel while soliciting subcontracts and purchase orders; activities will be monitored to ensure sufficient time is allowed for interested bidders to prepare their bids and to evaluate continuing compliance with this Subcontracting Plan.

5. Better Builders, Inc. agrees that the clause entitled "Utilization of Small Business Concerns" will be included in all subcontracts which offer further subcontracting opportunities. All subcontractors, except small business concerns, who receive subcontracts in excess of $500,000 ($1,000,000 in the case of construction) will be required to adopt and comply with a subcontracting plan similar to this one. Such plans will be reviewed to assure that all minimum requirements of an acceptable subcontracting plan have been satisfied.

The acceptability of goals shall be determined on a case-by-case basis depending on the supplies/services involved, the availability of all potential small business and prior experience. Once approved and implemented, plans will be monitored through the submission of periodic reports or, as time and availability of funds permit, periodic visits to subcontractor's facilities to review applicable records and subcontracting program progress.

6. Better Builders, Inc. agrees to submit such periodic reports and cooperate in any studies or surveys as may be required by the Contracting agency or the Small Business Administration in order to determine the extent of compliance by the offeror with the subcontracting plan and with the clause entitled "Utilization of Small Business Concerns" contained in the solicitation.

7. Better Builders, Inc. agrees to maintain at least the following types of records to document compliance with this Subcontracting Plan:

a. The names of all organizations, agencies, and associations contacted for all small business sources, along with records of attendance at conferences, seminars and trade fairs where additional sources were developed.

b. Source lists, guides, and other data identifying all types of small business concerns

c. Records on all subcontract solicitations, on a contract-by-contract basis, indicating (1) whether all types of small business concerns were solicited, and if not, why not; and (2) the reasons for the failure of all solicited small businesses to receive a subcontract award.

d. Records of all subcontract award data, to include subcontractor's name and address, to be kept on a contract-by-contract basis.

e. Minutes of internal motivational and training meetings held for the guidance and encouragement of purchasing personnel, and records of all monitoring activities performed for compliance evaluation.

f. Copies of SF 294 and SF 295 showing date and place of filing and copies of all other reports or results of reviews conducted by the contracting agency or other interested agencies of the Federal government to monitor our compliance with this Subcontracting Plan.

In closing Better Builders, Inc. states that it will be the policy of Better Builders, Inc. to afford every practicable opportunity to all types of small business concerns to participate in construction contracts awarded to Better Builders, Inc. by the Federal Government to ensure that equitable opportunity is provided to all types of small business concerns to compete for award of subcontracts and purchase orders, and to diligently pursue the achievement of our goals by participation of all types of small business concerns in the dollars available for subcontract/purchase order award under the solicitation.

BY_____ DATE _____

_____
Signature

_____
Title, and Company Name

_____ DATE _____
Contract Specialist

Approval Recommended

_____ DATE _____
SADBU

Approve/Disapprove

_____ DATE _____
Contracting Officer

Approve/Disapprove

_____ DATE _____
Procurement Center Representative
Small Business Administration

WEEKLY TEMPORARY ELECTRICAL INSPECTION

Week ending _____

Contract No. _____

Contract Description _____

The following items were inspected in accordance with requirements in National Electrical Code and Corps of Engineers Safety and Health Requirements Manual, EM 385-1-1.

1. Wire (size, type, condition).

2. Systems and devices (polarity, continuity of ground, resistance to ground).

3. Resistance of ground rods (25 OHMS) measured and recorded.

4. Check GFI for 15/20 amp 120 volt circuits.

5. Plugs and receptacles (type, NEMA rating).

6. Circuit breakers and disconnect (size, type, weatherproof).

7. Extension cords (type, UL listed, insulation condition, splices, location).

8. Open wiring on insulators, nonmetallic sheathed cable, outside clearance (600 volts or less), Festoon lighting (as applicable).

_____

Signature Electrician/Electrical Engineer

MINIMUM STANDARD FOR TEMPORARY ELECTRICAL SERVICE

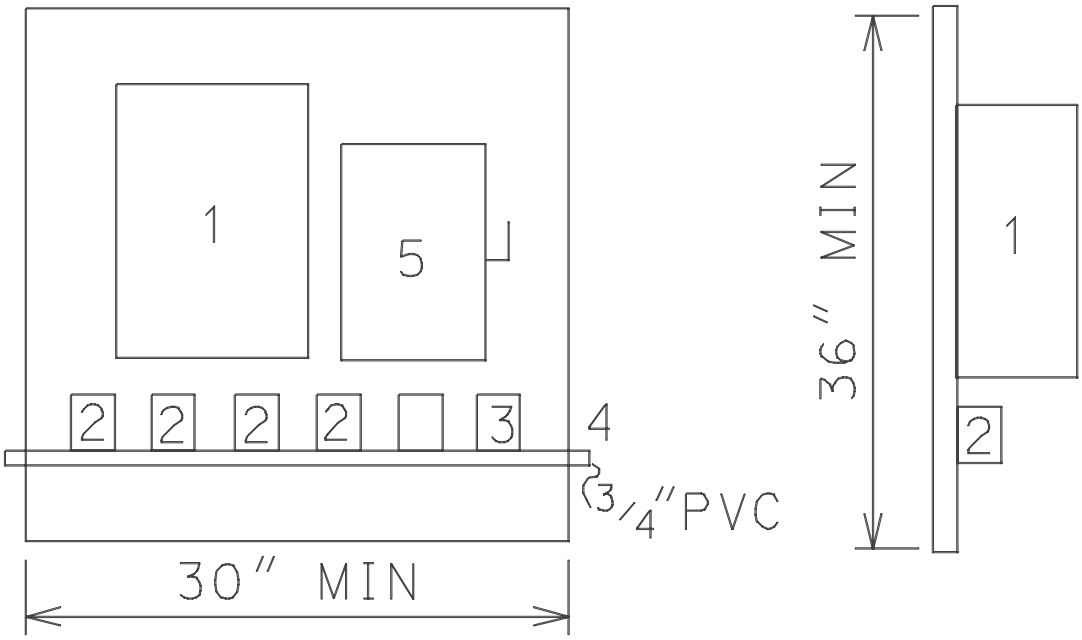

(DIMENSIONS ARE APPROXIMATE)

A. The backboard for temporary service shall consist of not less than 1/2 inch plywood of exterior grade.

B. Numbers above correspond to the item below:

Item 1 - NEMA 3R circuit breaker type panelboard. This panelboard shall consist of 1 two-pole 60 amp main circuit breaker, 4* one pole 20 AMP branch circuit breakers, and 1* two pole 20 AMP branch circuit breaker. Breakers shall meet Federal Specifications Standards for Class 1A breakers and shall be plug-in type. (*Number of breakers to be adjusted to suit the job requirements.)

Item 2 - Duplex grounding type convenience outlets in standard utility type outlet boxes with covers, meeting the NEC and NEMA requirements for wet locations. Connections to the branch circuit breakers shall be grounded by two conductors #12 NMC cable.

Item 3 – (Optional) A single three-conductor grounding type outlet rated for 250 volt service meeting the NEC and NEMA requirements for wet locations. Connections from this outlet to the two pole breaker shall be by two conductor grounded type NMC cable.

Item 4 - 3/4 inch PVC. This shall be used to support extension cords.

Item 5 – NEMA 3R service disconnect safety switch – 60 amp minimum.

C. The panelboard shall be grounded by #6 copper wire connected to a 3/4 inch by 10-foot long ground rod.

D. Service to the panel shall consist of three copper conductor #6 minimum service entrance cable. This cable may enter the top or side of the panelboard.

E. Periodic inspections of systems and devices will be made by the Contractor at intervals not to exceed 1 week, and a report will be submitted indicating the results.

F. All receptacle outlets that provide temporary electrical power during construction, remodeling, maintenance, repair, or demolition shall have ground-fault circuit-interrupter (CFCI) protection for personnel. GFCI protection shall be provided on all circuits serving portable electric hand tools or semi-portable electric power tools (such as block/brick saws, table saws, air compressors, welding machines, and drill presses). See EM 385-1-1 for exceptions.

G. Per EM 385-1-1 all temporary power distribution systems shall be submitted to the field office before installation.

ACTIVITY HAZARD ANALYSIS

1. Phase of Construction		
2. Location	3. Contract No.	4. Project
5. Prime Contractor	6. Date of Preparatory	7. Estimated Start Date
Potential Safety Hazard	Procedure to Control Hazard	
8. Contractor's Representative (signature)	9.	

SAS Form 9
1 Jan 82

SAFETY CHECKLIST FOR CRAWLER, TRUCK & WHEEL MOUNTED CRANES

Contract # and title:	
Equipment name & number: owned or leased?	
Contractor:	Subcontractor:
Contract Inspector:	Date inspected:

	Yes	No	N/A
1. Unless the manufacture has specified an on-rubber rating, outriggers will be fully extended and down? (16.D.10)			
2. Are lattice boom cranes equipped with a boom angle indicator, load indicating device, or a load moment indicator? (16.D.01)			
3. Are lattice boom and hydraulic cranes equipped with a means for the operator to visually determine levelness? (16.D.02)			
4. Are lattice boom and hydraulic cranes, except articulating booms cranes, equipped with drum rotation indicators located for use for the operator? (16.D.03)			
5. Are lattice boom and hydraulic mobile cranes equipped with a boom angle or radius indicator within the operator’s view? (16.D.04)			
6. Are lattice boom cranes, with exception of duty cycle cranes, equipped with an anti-two blocking device? (16.D.05)			
7. When duty cycle machines are required to make a non-duty lift, is the crane equipped with an international orange warning device and is a signal person present? (16.D 05)			
8. Are the following with the crane at all times: (16.C.02) a. the manufacturer’s operating manual? b. the load rating chart? c. the crane’s log book documenting use, maintenance, inspections and tests? d. operating manual for crane operator aids used on the crane.			

	Yes	No	N/A
9. Are the following on the project site: a. completed periodic inspection report prior to initial work? (16.C.12) b. pre-operational checklist used for daily inspection? (16.C.12) c. written reports of the operational performance test? (16.C.13) d. written reports of the load performance test? (16.C.13)			
10. Are all operators physically qualified to perform work? (16.C.05)			
11. Are all operators qualified by written and practical exam or by appropriate licensing agency for the type crane they are to operate? (16.C.05)			
12. Is the crane designed and constructed IAW the standards listed in Table 16-1? (16.C.06)			
13. Is a hazard analysis for set-up and set-down available? (16.C.08)			
14. Are accessible areas within the swing radius of the rear of the crane barricaded? (16.C.09)			
15. Are there at least 3 wraps of cable on the drum? (16.C.10)			
16. Are the hoisting ropes installed IAW the manufacturer’s recommendations? (16.C.10)			
17. Are critical lift plans available? (16.C.18)			
18. Are minimum clearance distance for high voltage lines posted at the operator’s position? (11.E.04)			
19. Do older lattice boom cranes with anti-two block warning devices in lieu of anti-two block prevention devices have a written exemption? (16.D.05)			
20. Is the slow moving emblem used on all vehicles which by design move at 25 MPH or less on public roads? (08.A.04)			
21. Are all vehicles which will be parked or moving slower than normal traffic on haul roads equipped with a yellow flashing light or flasher visible from all directions? (16.A.13)			

	Yes	No	N/A
22. Is all equipment to be operated on public roads provided with: (16A.07) a. headlights? b. brake lights? c. taillights? d. back-up lights? e. front and rear turn signals?			
23. Are seat and seat belts provided for the operator and each rider on equipment? (16.A.07 and 16.B.08)			
24. Is all equipment with windshields equipped with powered wipers and defogging or defrosting devices? (16.A.07)			
25. Is the glass in the windshield or other windows clear and unbroken to provide adequate protection and visiblity for the operator? (16.A.07, 16.B.10)			
26. Is all equipment equipped with adequate service brake system and emergency brake system? (16.A.18)			
27. Are areas on equipment where employees walk or climb equipped with platforms, footwalks, steps, handholds, guardrails, toeboards and non-slip surfaces? (16.B.03)			
28. Is all self propelled equipment equipped with automatic, audible, reverse signal alarms? (16.B.01)			
29. Is there a record of manufacturer’s approval of any modification of equipment which affects its capacity or safe operation? (16.A.18)			
30. Are truck and crawler cranes attached to a barge or pontoon by a slack tiedown system? (16.F.06)			
31. Have the following conditions been met for land cranes mounted on barges or pontoons: (16.F.04) a. Have load ratings been modified to reflect the increased loading from list, trim, wave, and wind action? b. Are all deck surfaces above the water? c. Is the entire bottom area of the barge or pontoon submerged? d. Are tie downs available? e. Are cranes blocked and secured?			
32. Are all belts, gears, shafts, spindles, drums, flywheels, or other rotating parts of equipment guarded where is a potential for exposure to workers? (16.B.03)			

	Yes	No	N/A
33. Is the area where the crane is to work level, firm and secured? (16.A.10)			
34. Is a dry chemical or carbon dioxide fire extinguisher rated at least 5-B:C on the crane? (16.A.26)			
35. Are trucks, for truck mounted cranes, equipped with a working reverse signal alarm? (16.B.01)			
36. Is a signal person provided where there is danger from swinging loads, buckets, booms, etc.? (16.B.13)			
37. Is there adequate clearance from overhead structures and electrical sources for the crane to be operated safely? (16.C.09)			
38. Is there adequate lighting for night operations? (16.C.19)			
39. Has the the boom stop test on cable-supported booms been performed? (16.D.06)			
40. Is the boom disenaging device functioning as required? (16.D.06)			
41. Has all rigging and wire rope been inspected? (Section 15)			
Remarks:(Enter actions taken for all “no” answers.)			
Contractor inspector signature			
Contractor QC/safety officer/project manager signature			

SAFETY CHECKLIST FOR PORTAL, TOWER, AND PILLAR CRANES

Contract # and Title:			
Equipment name & number: owned or leased?			
Contractor:	Subcontractor:		
Contract Inspector:	Date Inspected:		
	Yes	No	N/A
1. Are the following available: (16.E.02) a. written erection instructions? b. listing of the weight of each component? c. an activity hazard analysis for the erection? d. does the activity hazard analysis contain (1.) location of crane and adjacent structures? (2.) foundation design and construction requirements? (3.) clearance and bracing requirements?			
2. Is there a boom angle indicator within the operator's view? (16.E.04)			
3. Are luffing jib cranes equipped with: (16.E.05) a. shock absorbing jib stops? b. jib hoist limit switch? c. jib angle indicator visible to operator?			
4. If used, do rail clamps have slack between the point of attachment to the rail and the end fastened to the crane? (16E.06)			
5. Are the following with the crane at all times: (16.C.02) a. the manufacturer's operating manual? b. the load rating chart? c. the crane's log book documenting use, maintenance, inspections and tests? d. the operating manual for crane operational aids used on the crane?			

	Yes	No	N/A
6. Are the following on the project site: a. completed periodic inspection report prior to initial work? (16.C.12) b. pre-operational checklist used for daily inspections? (16.C.12) c. written reports of the operational performance tests? (16.C.13) d. written reports of the load performance tests? (16.C.13)			
7. Is every crane operator certified by a physician to be physically qualified to perform work? (16.C.05)			
8. Are all operators qualified by written and practical exam or by appropriate licensing agency for the type crane they are to operate? (16.C.05)			
9. Is the crane designed and constructed IAW the standards listed in Table 16-1? (16.C.05)			
10. Is a hazard analysis for set-up and set-down available? (16.C.08)			
11. Are there at least 3 wraps of cable on the drum? (16.C.10)			
12. Are the hoisting ropes installed IAW the manufacturer’s recommendations? (16.C.10)			
13. Is the a record of manufacturer’s approval of any modification of equipment which affects its capacity or safe operation? (16.A.07)			
5. Remarks: (Enter actions taken)			
Contractor inspector signature			
Contractor QC/safety officer/project manager signature			

SAFETY CHECKLIST FOR RIGGING

Contract # and title:			
Equipment name & number: owned or leased?			
Contractor	Subcontractor:		
Contractor inspector:	Date inspected:		
	Yes	No	N/A
1. Has all defective rigging been removed? (15.A.01)			
2. Is rigging stored properly? (15.A.01)			
3. Are running lines within 6.5’ of the ground or working level guarded? (15.A.03)			
4. Are all eye splices made in an approved manner with rope thimbles? (sling eyes excepted) (15.A.04)			
5. Are positive latching devices used to secure loads? (15.A.05)			
6. Are all custom lifting accessories marked to indicate their safe working loads? (15A.07)			
7. Are all custom designed lifting accessories proof-tested to 125% of their rated load? (15.A.07)			
8. Are the following conditions met for wire rope: (15.B.01-09) a. Are they free of rust or broken wires? b. Are defective ropes cut up or marked as unusable? c. Do rope clips attached with U-bolts have the U-bolts on the dead end or short end of the rope? d. Are protruding ends of strands in splices on slings and bridles covered or blunted? e. Except for eye splices in the end of wires and for all endless wire rope slings, are all wire ropes used in hoisting, lowering, or pulling loads one continuous piece, free of knots or splices?			

	Yes	No	N/A
f. Do all eye splices have at least 5 full tucks? g. If used, are wedge sockets fastening attached without attached the dead end of the wire rope to the live rope? h. Are they free of eyes or splices formed by wire rope clips or knots?			
9. Are the following conditions met for chain? (15.C.01-04) a. Are all chains alloyed? b. Do all coupling links or other attachments have rated capacities at least equal to that of the chain. c. Are makeshift fasteners restricted from use?			
10. Are the following conditions met for fiber rope:(15.D.01-07) a. Are all ropes protected from freezing, excessive heat or corrosive materials? b. Are all ropes protected from abrasion? c. Are splices made IAW manufacture's recommendations? d. Do all eye splices in manila rope contain at least 3 full tucks and do all short splices contain at least 6 full tucks(3 on each side of the centerline of the splice)? e. Do all splices in layed synthetic fiber rope contain at least 4 full tucks and do short splices contain at least 8 full tucks (4 on each side of the centerline of the splice)? f. Do the tails of fiber rope splices extend at least 6 rope diameters (for rope 1" diameter or greater) past the last full tuck? g. Are all eye splices large enough to provide an included angle of not greater than 60* at the splice when the eye is placed over the load or support?			
11. Are the following conditions met for all slings:(15.E.01-06) a. Is protection provided between the sling and sharp surfaces? b. Do all rope slings have minimum clear length of 40 times the diameter of component ropes between each end fitting or eye splice? c. Do all braided slings have a minimum clear length of 40 times the diameter of component ropes between each end fitting or eye splice?			

	Yes	No	N/A
d. Do all welded alloy steel chain slings have affixed permanent identification stating size, grade, rated capacity and manufacturer? e. Is each synthetic web sling marked or coded to identify its manufacturer, rated capacities for each type hitch and the type material?			
12. Are drums, sheaves, and pulley smooth and free of surface defects? (15.F.01)			
13. Is the ratio of the diameter of the rigging and the drum, block sheave or pulley thread diameter such that the rigging will adjust without excessive wear, deformation, or damage? (15F.02)			
14. Have all damaged drums, sheaves and pulleys been removed from service? (15.F.04)			
15. Are all connections, fittings, fastenings, and attachments of good quality, proper size and strength, and installed IAW manufacturer's recommendations? (15.F.05)			
16. Are all shackles and hooks sized properly? (15.F.06 & .07)			
17. Are hoisting hooks rated at 10 tons or greater provided with safe handling means? (15.F.07)			
18. Do all drums have sufficient rope capacity? (15.F.08)			
19. Is the drum end of the rope anchored by a clamp securely attached to the drum in a manner approved by the manufacturer? (15.F.08)			
20. Do grooved drums have the correct groove pitch for the diameter of the rope and is the groove depth correct? (15.F.08)			
21. Do the flanges on grooved drums project beyond the last layer of rope at a distance of either 2″ or twice the diameter of the rope, whichever is greater? (15.F.08)			
22. Do the flanges on ungrooved drums project beyond the last layer of rope a distance of either 2.5″ or twice the diameter of the rope, which ever is greater.			

	Yes	No	N/A
23. Are the sheaves compatible with the size of rope used and as specified by the manufacture? (15F.09)			
24. Are sheaves properly aligned, lubricated, and in good condition? (15.F.09)			
25. When rope is subject to riding or jumping off a sheave, are sheaves equipped with cablekeepers? 915.F.09)			
26. Are eye bolts loaded in the plane of the eye and at angles less than 45* to the horizontal? (15.F.10)			
27. Remarks: (Enter actions taken for “no” answers.)			
Contractor inspector signature			
Contractor QC/safety/project manager signature			

SAFETY CHECKLIST FOR MOTOR VEHICLES , TRAILERS AND TRUCKS

Contract # and title: owned or leased?	
Equipment name & number:	
Contractor:	Subcontractor:
Contractor inspector:	Date inspected:

	Yes	No	N/A
1. Are records of safety inspections of all vehicles available? (18.A.02)			
2. Are all vehicles to be operated between sunset and sunrise equipped with: (18.A.04) a. 2 headlights? b. taillights and brake lights? c. front and back turn signals? d. 3 emergency flares, reflective markers, or equivalent portable warning devices?			
3. Are vehicles, except trailers or semi-trailers having a gross weight of 5000 lbs or less, equipped with service brakes and manually operated parking brakes? (18.A.05)			
4. Are service brakes on trailers and semitrailers controlled from the driver’s seat of the prime mover? (18A.06)			
5. Does the vehicle have: (18.A.06) a. a speedometer? b. a fuel gage? c. an audible warning device (horn)? d. a windshield & adequate windshield wiper? e. an operable defroster and defogging device? f. an adequate rearview mirror? g. a cab, cab shield, and other protection to protect the driver from the elements and falling or shifting materials? h. non-slip surfaces on steps? I. a power-operated starting device?			

	Yes	No	N/A
6. Is all the glass safety glass and is all broken or cracked glass replace? (18.A.07)			
7. Do trailers meet the following: (18A.08) a. Are all towing devices adequate for the weight drawn? b. Are all towing devices properly mounted? c. Are locking devices or a double safety system provided on every 5th wheel mechanism and tow bar arrangement to prevent accidental separation? d. Are trailers coupled with safety chains or cables to the towing vehicle? e. Are trailers equipped with the power brakes equipped with a break-away device which will lock-up the brakes in the event the trailer separates from the towing vehicle?			
8. Are all dump trucks:(18.A.10) a. equipped with a holding device to prevent accidental lowering of the body? b. equipped with a hoist lever secured to prevent accidental starting or tipping? c. equipped with means to determine (from the operator’s position) if the dump box is lowered? d. equipped with trip handles for tailgates that allow the operator to be clear?			
9. Are all buses, trucks and combination of vehicles with a carrying capacity of 1.5 tons or more, to be operated on public roads equipped with: (18.A.11) a. 3 reflective markers? b. 2 wheel chocks for each vehicle? c. at least one 2A:10B:C fire extinguisher? d. at least two properly rated fire extinguishers (for vehicles carrying flammable cargo)? e. a red flag not less than 1 foot square.			
10. Is vehicle exhaust controlled so as not to present a hazard to personnel? (18.A.13)			
11. Are all rubber tired motor vehicles equipped with fenders or with mud flaps if the vehicle is not designed for fenders? (18.A.14)			

	Yes	No	N/A
12. Are all vehicles, except buses, equipped with seat belts? (18.B.02)			
13. Does all self-propelled construction and industrial equipment have a working reverse signal alarm? (16.B.01)			
14. Are all hot surfaces of equipment, including exhaust pipes or other lines, guarded or insulated to prevent injury or fire? (16.B.03)			
15. If an off the road vehicle, is it equipped with rollover protective structures? (16.B.12)			
16. Remarks: (Enter actions taken for “no” answers)			
Contractor inspector signature			
Contractor QC/safety officer/project manager signature			

SAFETY CHECKLIST FOR CRAWLER TRACTORS AND DOZERS

Contract # and title:	
Equipment name & number: owned or leased?	
Contractor:	Subcontractor:
Contractor inspector:	Date inspected:

	Yes	No	N/A
1. Are initial and daily/shift inspection records available? (16.A.01& .02)			
2. Are only qualified operators assigned to operate mechanized equipment? (16.A.04)			
3. Are sufficient lights provided for night operations? (16.A.11)			
4. Is the unit shut down before refueling? (16.A.14)			
5. Does the unit have as a minimum a 5-B:C fire extinguisher? (16.A.26)			
6. Is there an effective, working reverse alarm? (16.B.01)			
7. Are moving parts, shafts, sprockets, belts, etc., guarded? (16.B.03 ,07, and 13)			
8. Is protections against hot surfaces, exhausts, etc., provided? (16.B.03 and .13)			
9. Are fuel tanks located in a manner to prevent spills or overflows from running onto engine exhaust or electrical equipment?			

	Yes	No	N/A
10. Are exhaust discharges directed so they do not endanger person of obstruct operator vision?(16.B.05)			
11. Are seat belts provided? (16B.08)			
12. Is protection (grills, canopies, screens) provided to shield operator from falling or flying objects? (16.B.10 and .11)			
13. Is roll over protection provided? (16.B.12)			
14. Remarks: (Enter actions taken for “no” answers)			
Contractor inspector signature			
Contractor QC/safety officer/project manager signature			

SAFETY CHECKLIST FOR SCRAPERS, MOTOR GRADERS , AND OTHER MOBILE EQUIPMENT

Contract # and title:	
Equipment name and number: owned or leased?	
Contractor:	Subcontractor:
Contractor inspector:	Date inspected:

	Yes	No	N/A
1. Are initial and daily/shift inspection records available? (16.A.01 & .02)			
2. Are only qualified operators assigned to operate equipment? (16.A.04)			
3. Are sufficient lights provided for night operations? (16.A.11)			
4. Does the unit have as a minimum a 5-B:C fire extinguisher? (16.A.26)			
5. Is there an effective working reverse alarm? (16.B.01)			
6. Is the unit shut down for refueling? (16.A.14)			
7. Are moving parts, shafts, sprockets, belts, etc., guarded? (16.B.03, .07 and .13)			
8. Is protection against hot surfaces, exhausts, etc., provided? (16.B.03 and .13)			
9. Are fuel tanks located in a manner to prevent spills or overflow from running onto engine exhaust or electrical equipment? (16.B.04)			
10. Are exhaust discharges directed so they do not endanger persons or obstruct operator vision? (16.B.05)			

	Yes	No	N/A
11. Are seat belts provided for each person required to ride on the equipment? (16.B.08)			
12. Is protection (grills, canopies, screens) provided to shield operators from falling or flying objects? (16.B.10 and .11)			
13. Is roll over protection provided? (16.B.12)			
14. Is a safe means of access to the cab provided (steps, grab bars, non-slip surfaces)? (16.B.03)_			
15. Are adequate head and tail lights provided? (16.A.07)			
16. Have brakes been tested and found satisfactory? (16.A.07)			
17. Does the unit have an emergency brake which will automatically stop the equipment upon brake failure? Is this system manually operable from the drivers position? (16.A.07)			
18. Is all equipment with windshields equipped with powered wipers and defogging or defrosting system? (16.A.07)			
19. Are all vehicles which will be parked or moving slower than normal traffic on haul roads equipped with a yellow flashing light or flasher visible from all directions? (16.A.13)			
20. Is the slow moving emblem used on all vehicles which by design move at 25 MPH or less on public roads? (08A.04)			

	Yes	No	N/A
21. Have air tanks been tested and certified? (20.A.01)			
22. Is an air pressure gage in working condition installed on the unit? (20.A.12)			
23. Does the air tank have an accessible drain valve? (20.B.17)			
24. Remarks: (Enter action taken for all “no” answers)			
Contractor inspector signature			
Contractor QC/safety officer/project manager			

SAFETY CHECKLIST FOR MATERIAL HOISTS

Contract # and title:	
Equipment name & number:	
Contractor:	Subcontractor:
Contract Inspector:	Date inspected:

	Yes	No	N/A
1. Are all hoist towers, masts, guys or braces, counterweights, drive machinery supports, sheave supports, platforms, supporting structures, and accessories designed by a licensed engineer? (16.K.02)			
2. Is a copy of the hoist operating manual available? (16.K.04)			
3. Do all floors and platforms have slip-resistant surfaces? (16.K.08)			
4. Are landings and runways adequately barricaded and is overhead protection provided where needed? (16.K.08)			
5. Are hoisting ropes installed IAW manufacturer's instructions? (16.K.10)			
6. Are operating rules posted at the hoist operator's station? (16.K.14)			
7. Are air powered hoists connected to an air supply of sufficient capacity and pressure to safely operate the hoist? (16.K.15)			
8. Are pneumatic hoses secured by some positive means to prevent accidental disconnection? (16.K.15)			
9. Remarks: (Enter actions taken for all "no" answers.)			
Contractor inspector signature			
Contractor QC/safety officer/project manager signature			

SAD Form 1666g-R Mar 97 Previous editions may be used for contracts referencing the 1992 edition of EM 385-1-1.

SAFETY CHECKLIST FOR EARTH DRILLING EQUIPMENT

Contract # and title:	
Equipment name & number:	
Contractor:	Subcontractor:
Contractor inspector:	Date inspected:

	Yes	No	N/A
1. Is a copy of the manual for all drilling equipment available? (16.M.01)			
2. Have all overhead electrical hazards and potential ground hazards been identified in a site layout plan and addressed in an activity hazard analysis? (16.M.02)			
3. Are MSDSs for all drilling fluids available? (16.M.05)			
4. Does the drilling equipment have 2 easily accessible emergency shut down devices (one for the operator and one for the helper)? (16.M.06)			
5. Is the equipment posted with a warning of electrical hazards? (16.M.06)			
6. Is there a spotter or an electrical proximity warning device available to ensure safe distances from power lines are maintained? (16.M.06)			
7. Remarks: (Enter actions taken for “no” answers)			
Contractor inspector signature			
Contractor QC/safety officer/project manager			

SAD Form 1666h-R Mar 97 Previous editions may be used for contracts referencing the 1992 edition of EM 385-1-1.

TRANSMITTAL OF SHOP DRAWINGS, EQUIPMENT DATA, MATERIAL SAMPLES, OR MANUFACTURER'S CERTIFICATES OF COMPLIANCE *(Read instructions on the reverse side prior to initiating this form)*	DATE	TRANSMITTAL NO.

SECTION I - REQUEST FOR APPROVAL OF THE FOLLOWING ITEMS *(This section will be initiated by the contractor)*

TO:	FROM:	CONTRACT NO.	CHECK ONE: ☐ THIS IS A NEW TRANSMITTAL ☐ THIS IS A RESUBMITTAL OF TRANSMITTAL _____
SPECIFICATION SEC. NO. *(Cover only one section with each transmittal)*	PROJECT TITLE AND LOCATION		CHECK ONE: THIS TRANSMITTAL IS FOR ☐ FIO ☐ GOV'T. APPROVAL

ITEM NO. *a.*	DESCRIPTION OF ITEM SUBMITTED *(Type size, model number/etc.)* *b.*	MFG OR CONTR. CAT., CURVE DRAWING OR BROCHURE NO. *(See instruction no. 8)* *c.*	NO. OF COPIES *d.*	CONTRACT REFERENCE DOCUMENT		FOR CONTRACTOR USE CODE *g.*	VARIATION *(See instruction No. 6)* *h.*	FOR CE USE CODE *i.*
				SPEC. PARA. NO. *e.*	DRAWING SHEET NO. *f.*			

REMARKS	I certify that the above submitted items have been reviewed in detail and are correct and in strict conformance with the contract drawings and specifications except as other wise stated. NAME AND SIGNATURE OF CONTRACTOR

SECTION II - APPROVAL ACTION

ENCLOSURES RETURNED *(List by Item No.)*	NAME, TITLE AND SIGNATURE OF APPROVING AUTHORITY	DATE

INSTRUCTIONS

1. Section I will be initiated by the Contractor in the required number of copies.

2. Each transmittal shall be numbered consecutively in the space provided for "Transmittal No.". This number, in addition to the contract number, will form a serial number for identifying each submittal. For new submittals or resubmittals mark the appropriate box; on resubmittals, insert transmittal number of last submission as well as the new submittal number.

3. The "Item No." will be the same "Item No." as indicated on ENG FORM 4288-R for each entry on this form.

4. Submittals requiring expeditious handling will be submitted on a separate form.

5. Separate transmittal form will be used for submittals under separate sections of the specifications.

6. A check shall be placed in the "Variation" column when a submittal is not in accordance with the plans and specifications--also, a written statement to that effect shall be included in the space provided for "Remarks".

7. Form is self-transmittal, letter of transmittal is not required.

8. When a sample of material or Manufacturer's Certificate of Compliance is transmitted, indicate "Sample" or "Certificate" in column c, Section I.

9. U.S. Army Corps of Engineers approving authority will assign action codes as indicated below in space provided in Section I, column i to each item submitted. In addition they will ensure enclosures are indicated and attached to the form prior to return to the contractor. The Contractor will assign action codes as indicated below in Section I, column g, to each item submitted.

THE FOLLOWING ACTION CODES ARE GIVEN TO ITEMS SUBMITTED

A -- Approved as submitted.

B -- Approved, except as noted on drawings.

C -- Approved, except as noted on drawings.
Refer to attached sheet resubmission required.

D -- Will be returned by separate correspondence.

E -- Disapproved (See attached).

F -- Receipt acknowledged.

FX -- Receipt acknowledged, does not comply as noted with contract requirements.

G -- Other *(Specify)*

10. Approval of items does not relieve the contractor from complying with all the requirements of the contract plans and specifications.

(Reverse of ENG Form 4025-R)

COST ESTIMATE ANALYSIS

For use of this form, see TM 5-800-2; the proponent agency is USACE.

PROJECT	INVITATION/CONTRACTOR	EFFECTIVE PRICING DATE	DATE PREPARED
LOCATION	CODE (Check one) ☐ A ☐ B ☐ C ☐ OTHER	DRAWING NO.	SHEET OF SHEETS
		ESTIMATOR	CHECKED BY

TASK DESCRIPTION	QUANTITY		LABOR				EQUIPMENT		MATERIAL		TOTAL	SHIPPING	
	NO. OF UNITS	UNIT MEAS	MH UNIT	TOTAL HRS	UNIT PRICE	COST	UNIT PRICE	COST	UNIT PRICE	COST		UNIT WT	TOTAL WT
TOTAL THIS SHEET													

DA FORM 5418-R, Apr 85

TRANSFER AND ACCEPTANCE OF MILITARY REAL PROPERTY

Form Approved
OMB No. 0704-0188

PAGE OF PAGES

Public reporting burden for this collection of information is estimated to average 30 minutes per response, including the time for reviewing instructions, searching existing data sources, gathering and maintaining the data needed, and completing and reviewing the collection of information. Send comments regarding this burden estimate or any other aspect of this collection of information, including suggestions for reducing this burden, to Washington Headquarters Services, Directorate for Information Operations and Reports, 1215 Jefferson Davis Highway, Suite 1204, Arlington, Va 22202-4302, and to the Office of Management and Budget, Paperwork Reduction Project (0704-0188), Washington, DC 20503.

1. **FROM** *(Installation/Activity/Service and Zip code)*	2. OPERATING UNIT	3. DISTRICT CODE	4. OPERATING AGENCY	5. DATE	6. JOB NUMBER	7. SERIAL NUMBER	8. CONTRACT NUMBER

9. **TO** *(Installation/Activity/Service and Zip code)*	10. OPERATING UNIT	11. DISTRICT CODE	12. OPERATING AGENCY	13. ACCOUNTING NUMBER	14. ACCOUNTABLE OFFICE NUMBER	15. TYPE OF TRANSACTION		16. PROJECT NUMBER
						A. ☐ NEW CONSTR. ☐ EXISTING FAC. ☐ CAPITAL IMP. ☐ OTHER *(Specify)*	B. ☐ BENF/O ☐ PHYSICAL COM. ☐ FINAN. COM. ☐ OTHER *(Specify)*	

ITEM NO. 17	CATEGORY CODE 18	FACILITY *(Category description)* 19	NO. OF UNITS 20	TYPE 21	UNIT OF MEAS. 22	TOTAL QUANTITY 23	COST 24	DRAWING NUMBERS 25	REMARKS 26

27.		28. ACCEPTED BY *(Signature)*	DATE
TRANSFERRED BY *(Signature)*	DATE	TITLE *(Post Engr./Base Civ. Engr./Navy Rep.)*	29. PROPERTY VOUCHER NUMBER
TITLE *(Area Engr./Base Engr./DPWO)*			

30. CONSTRUCTION DEFICIENCIES

31. REMARKS

INSTRUCTIONS

This form has been designed and issued for use in connection with the transfer of military real property between the military departments and to or from other government agencies. It supersedes ENG Forms 290 and 290B (formerly used by the Army and Air Force) and NAVDOCKS Form 2317 (formerly used by the Navy).

Existing instructions issued by the military departments relative to the preparation of the three superseded forms are applicable to this form to the extent that the various items and columns on the superseded forms have been retained. Additional instructions, as appropriate, will be promulgated by the military departments in connection with any new items appearing hereon.

With the issuance of this DD form, it is not intended that the departments shall revise and reprint manuals and directives simply to show the number of this DD form. Such action can be accomplished through the normal course of revision for other reasons.

Approved by OM 0348-0046

DISCLOSURE OF LOBBYING ACTIVITIES

Complete this form to disclose lobbying activities pursuant to 31 U.S.C. 1352
(See reverse for public burden disclosure.)

1. Type of Federal Action:

☐ a. contract
b. grant
c. cooperative agreement
d. loan
e. loan guarantee
f. loan insurance

2. Status of Federal Action:

☐ a. bid/offer/application
b. initial award
c. post-award

3. Report Type:

☐ a. initial filing
b. material change

For Material Change Only:
year _____ quarter _____
date of last report _____

4. Name and Address of Reporting Entity:

☐ Prime ☐ Subawardee
Tier _____, *if known*:

Congressional District, *if known:*

5. If Reporting Entity in No. 4 is Subawardee, Enter Name and Address of Prime:

Congressional District, *if known*:

6. Federal Department/Agency:

7. Federal Program Name/Description:

CFDA Number, *if applicable*: _____

8. Federal Action Number, *if known*:

9. Award Amount, *if known*:

$

10. a. Name and Address of Lobbying Entity
(*if individual, last name, first name, MI):*

b. Individuals Performing Services *(including address if different from No. 10a)*
(last name, first name, MI):

(attach Continuation Sheet(s) SF-LLL-A, *if necessary*)

11. Amount of Payment *(check all that apply)*:

$ _____ ☐ actual ☐ planned

12. Form of Payment *(check all that apply)*:

☐ a. cash
☐ b. in-kind; specify: nature _____
value _____

13. Type of Payment *(check all that apply)*:

☐ a. retainer
☐ b. one-time fee
☐ c. commission
☐ d. contingent fee
☐ e. deferred
☐ f. other; specify: _____

14. Brief Description of Services Performed or to be Performed and Date(s) of Service, including officer(s), employee(s), or Member(s) contacted, for Payment indicated in Item 11:

(attach Continuation Sheet(s) SF-LLL-A, *if necessary*)

15. Continuation Sheet(s) SF-LLL-A attached: ☐ Yes ☐ No

16. Information requested through this form is authorized by title 31 U.S.C section 1352. This disclosure of lobbyig activities is a materia representation of fact upon which reliance was placed by the tier above when this transaction was made or entered into. This disclosure is required pursuant to 31 U.S.C. 1352 . This information will be reported to the Congress semi-annually and will be available for public inspection. Any person who fails to

Signature: _____

Print Name: _____

Title: _____

Telephone No.: _____ **Date:** _____

Federal Use Only:

Authorized for Local Reproduction

INSTRUCTIONS FOR COMPLETION OF SF-LLL, DISCLOSURE OF LOBBYING ACTIVITIES

This disclosure form shall be completed by the reporting entity, whether subawardee or prime Federal recipient, at the initiation or receipt of a covered Federal action, or a material change to a previous filing, pursuant to title 31 U.S.C. section 1352. The filing of a form is required for each payment or agreement to make payment to any lobbying entity for influencing or attempting to influence an officer or employee of any agency, a Member of Congress, an officer or employee of Congress, or an employee of a member of Congress in connection with a covered Federal action. Use the SF-LLL-A Continuation Sheet for additional information if the space on the form is inadequate. Complete all items that apply for both the initial filing and material change report. Refer to the implementing guidance published by the Office of Management and Budget for additional information.

1. Identify the type of covered Federal action for which lobbying activity is and/or has been secured to influence the outcome of a covered Federal action.

2. Identify the status of the covered Federal action.

3. Identify the appropriate classification of this report. If this is a followup report caused by a material change to the information previously reported, enter the year and quarter in which the change occurred. Enter the date of the last previously submitted report by this reporting entity for this covered Federal action.

4. Enter the full name, address, city, state and zip code of the reporting entity. Include Congressional District, if known. Check the appropriate classification of the reporting entity that designates if it is, or expects to be, a prime or subaward recipient. Identify the tier of the subawardee, e.g., the first subawardee of the prime is the 1st tier. Subawards include but are not limited to subcontracts, subgrants and contract awards under grants.

5. If the organization filing the report in item 4 checks “Subawardee”, then enter the full name, address, city, state and zip code of the prime Federal recipient. Include Congressional District, if known.

6. Enter the name of the Federal agency making the award or loan commitment. Include at least one organizational level below agency name, if known. For example, Department of Transportation, United States Coast Guard.

7. Enter the Federal program name or description for the covered Federal action (item 1). If known, enter the full Catalog of Federal Domestic Assistance (CFDA) number for grants, cooperative agreements, loans, and loan commitments.

8. Enter the most appropriate Federal identifying number available for the Federal action identified in item 1 (e.g., Request for Proposal (RFP) number; Invitation for Bid (IFB) number; grant announcement number; the contract, grant, or loan award number; the application/proposal control number assigned by the Federal agency). Include prefixes, e.g., “RFP-DE-90-001.”

9. For a covered Federal action where there has been an award or loan commitment by the Federal agency, enter the Federal amount of the award/loan commitment for the prime entity identified in item 4 or 5.

10. (a) Enter the full name, address, city, state and zip code of the lobbying entity engaged by the reporting entity identified in item 4 to influence the covered Federal action.

    (b) Enter the full names of the individuals(s) performing services, and include full address if different from 10 (a). Enter Last Name, First Name, and Middle Initial (MI).

11. Enter the amount of compensation paid or reasonably expected to be paid by the reporting entity (item 4) to the lobbying entity (item 10). Indicate whether the payment has been made (actual) or will be made (planned). Check all boxes that apply. If this is a material change report, enter the cumulative amount of payment made or planned to be made.

12. Check the appropriate box(es). Check all boxes that apply. If payment is made through an in-kind contribution, specify the nature and value of the in-kind payment.

13. Check the appropriate box(es). Check all boxes that apply. If other, specify nature.

    Provide a specific and detailed description of the services that the lobbyist has performed, or will be expected to perform, and the date(s) of any services rendered. Include all preparatory and related activity, not just time spent in

Public reporting burden for this collection of information is estimated to average 30 minutes per response, including time for reviewing instructions, searching existing data sources, gathering and maintaining the data needed, and completing and reviewing the collection of information. Send comments regarding the burden estimate or any other aspect of this collection of information, including suggestions for reducing this burden, to the Office of Management and Budget, Paperwork Reduction Project (0348-0046), Washington, D.C. 20503.

DISCLOSURE OF LOBBYING ACTIVITIES
CONTINUATION SHEET

Approved by OM
0348-0046

Reporting Entity: _____ Page ____ of ____ ____

*U.S. G.P.O. 1990-260-708:00012

REAL PROPERTY INVENTORY

ITEM	TALLY	TOTAL
COMMODES		
LAVATORIES		
URINALS		
EXHAUST FAN (9")		
EXHAUST FAN (OTHER)		
WATER COOLER		
HOTWATER HEATER		
MOP SINK		
AC PLANT	LS 5 TN. 5-25 TN. 25-100 TN. OVER 100 TN.	
AS (WINDOW TYPE)		
FIRE ALARM SYSTEM	MANUAL HALON SPRINKLER	
EMERGENCY LIGHTS		
UNIT HEATER		
STRIP HEATER		
COOLING TOWER		
WALK-IN COOLER		
AIR CURTAIN		
EYE WASH		
SHOWERS		
BOILER	GAS FIRED OIL FIRED STEAM	
FUEL TANK	UNDERGROUND OUTSIDE	

REAL PROPERTY INVENTORY

ITEM	TALLY	TOTAL
WASH BASIN		
AIR COMPRESSOR		
HOISTS		
INVENTORY BY:		DATA:
RECONCILED BY:		DATA:

REAL PROPERTY INVENTORY

ITEM	TALLY	TOTAL
INVENTORIED BY:		DATE:
RECONCILED BY:		DATE:

SECTION 01010

GENERAL PROJECT DESCRIPTION AND DESIGN REQUIREMENTS

1. GENERAL

1.1 This section provides general scope information and design/construction requirements for this project. The design and construction requirements within this RFP represent the minimum quantity and quality acceptable for the proposal and project. The Contractor shall design and construct the Marine Corps Reserve Center, Hunter Army Airfield, GA resulting in a complete and useable facility. Funds available for construction contract award is $5,225,000.

1.2 The scope of work for the Marine Corps Reserve Center, Hunter Army Airfield, GA shall include the design, site preparation and construction of a two-story facility on a vacant site. Supporting facilities will include parking, sidewalks, water distribution, sanitary sewer lines, electrical service, fire alarm systems, fire sprinkler systems, storm drainage, erosion control, communication systems and landscaping/irrigation

1.3 Options Description

Option No. 1 Loading Ramp (See Dwg. C-104 Noted as Option 0004)

The optional loading ramp will be used to ease the loading of equipment into tractor trailers for transport. The ramp shall be concrete and includes all necessary reinforcing and protection, such as bollards. The dimensions of the ramp are approximately ten feet wide and thirty-five feet long. The height of the ramp will be approximately four feet. The slope of the ramp will be approximately eleven percent.

The ramp will be located in the asphalt entrance drive of the Tactical Parking Area. The ramp will be oriented parallel to the driveway. The low end of the ramp will be oriented towards the tactical parking area. The high end of the ramp will be oriented towards Leonard Neal Street.

Option No. 2 Weapons Cleaning Pad (See Dwg A-102)

Option No. 3 Bleachers in Drill Hall (See Dwg. A-102 & Appendix ‘B’)

Option No. 4 Shelving (See Dwg. A-102, A-103 & Appendix ‘B’)

Option No. 5 Oil Dispenser (See Appendix ‘B’)

A central dispensing system shall be provided in each Tactical Vehicle Maintenance Building service bay for grease, and three different grades of oil. Integral spill containment system and hose reels for each lubricant shall be provided with the system.

Option No. 6 Standing Seam Metal Roof System (See Section 01010 21.8.2.1)

Option No. 7 Additional 35 Parking Spaces (See Dwg. C-104 Noted as Option 0010)

The additional thirty-five parking spaces will be included in the POV Parking Area. The paving, striping, curb, gutter, etc. shall match the materials utilized for the POV Parking Area. This bid option will include any items associated with, and included in, the POV Parking Area such as storm drainage, soil erosion & sediment control, landscaping, lighting, etc.

The additional parking spaces are located to the west of the POV Parking Area.

1.4 Sustainable Design

This project has a goal of achieving Bronze level of sustainable design features as measured through the use of Sustainable Project Rating Tool (SPiRiT), Appendix E to Section 01010. SPiRiT is a modified version of the U.S. Green Building Council LEED Green Building Rating System. As stated in the contract clauses each offeror will complete and submit the SPiRit Facility Points Summary with the proposal; the total points score will determine the SPiRiT Sustainable Project Certificate Level: SPiRiT Bronze, Silver, Gold or Platinum. The proposed level will be used as a proposal evaluation factor as defined in the contract clauses. A minimum of Bronze level rating is required.

1.5 Site Development and Utilities

Site development will include all clearing, grading, roads, parking lots, landscaping, sidewalks, curbs and gutters and utilities for the complex.

1.6 Demolition

Demolition will include removal of pavement, non-saleable trees and stumps, and other minor site items. Underground utilities will be removed and capped as specified.

1.7 Facilities

The project includes the following: Reserve training building will be a steel-framed structure with split face CMU, concrete foundation and floors; asphalt shingle roof; metal doors and frames, mechanical, electrical, fire protection systems; heating ventilation and air conditioning systems. The vehicle maintenance bay will be a one-story, high-bay, steel framed structure with split faced CMU walls with concrete foundation and floor, 3 ply built-up roofing; metal doors and frames; roll up doors; mechanical, electrical, fire protection systems; heating ventilation, and air conditioning systems in office areas. The paraloft building will be contained within a steel framed structure with split faced CMU and metal siding at paraloft drying tower, concrete foundation and floors; asphalt shingles roofing; metal doors and frames; roll up doors; mechanical, electrical and fire protection systems; heating and ventilation systems. The construction of this project will provide anti-terrorism force protection features and will include laminated glass and stand off distance. Access for disabled is limited to public areas – lobby single public restroom, drill hall and administrative area at first floor. The Basic function of the building is “Primary Gathering Building.”

1.8 Project design plans and specifications may be in English inch-pound units System of measurements but the units for the site and the building must be consistent. The site survey drawings provided are in English units, as are the Site Layout Plan and Floor Plan. The successful proposer may present their plans in English units of measure.

2. DESIGN CRITERIA

2.1 The proposal documents shall include adequate information in the form of narratives, drawings, calculations, catalog cuts, etc., to enable the Government to adequately review the proposal. Proposal documents shall include all requirements listed in the contract clauses and compliance with the format requirements is encouraged to facilitate review and award.

2.2 The design, following award, will include a 60% and final design submittal and corrected final design submittals. See Section 01012, DESIGN AFTER AWARD.

2.3 The proposal drawings may be done with any CADD software. Once the contract is awarded all drawings will be initiated and done in Microstation version J software in accordance with A/E/C CADD Standards Manual which is available at: (http://tsc.wes.army.mil/).

2.4 Codes, reference documents and criteria referenced within this RFP, are an integral part of this RFP. Each proposer shall be responsible for securing any necessary reference at his own expense and resources. Requirements of this RFP may delete, revise, add to, or substitute for criteria contained in the referenced documents and this RFP shall be deemed the controlling authority of any changes to the other referenced documents and criteria.

2.5 Information provided in the appendices is intended to provide additional design requirements and information. Appendix “A” is for reference. Appendix “B” is Functional Room Requirements, a room-by-room summary of specific user requirements for functions within the new facility. Appendix C is the Fire Protection/Life Safety Code Analysis. Appendix “D” is Sustainable Project Rating Tool (SPiRiT) Appendix “E” is the SPIRIT Requirements and Point Summary Table. Appendix “F” contains Geotechnical Information. Appendix “G” contains Finish Requirement Schedule information. Appendix “H” contains the Interior Design Presentation Format. Appendix “I” not used. Appendix “J” contains Department of Defense Anti-terrorism/Force protection construction standards. Appendix “K” contains Design: Navy and Marine Corps Intranet (NMCI) Standard Construction Practices.

2.6 The drawings in this RFP are conceptual and represent an acceptable solution to the project functional requirements. They have been coordinated with and approved by the Using Agency. The Using Agency has indicated that the floor-plan drawings represent the functional arrangement and space relationships that they desire. Use of the exact floor-plan presented is optional. The net square footage shown for each space is identified in Appendix “B” and is the minimum requirement. As part of the Government’s desire to achieve a “Best Value” project, Proposers may increase space requirements above the minimums shown. Spaces where additional square footage is most desired by priority are: Paraloft Area, Vehicle Maintenance Facility, Supply/Storage and Administrative areas. Proposals will not exceed a gross square footage of 43,368 Square feet (see paragraph 21.7 for gross square footage calculation guidance). Should the proposer elect to change the floor plan given, it is the proposer’s responsibility to comply with all other requirements identified in this RFP to include anti-terrorism stand-off distances (Appendix J).

3. SPECIFICATION INTENT

The intent of these specification sections is to describe the requirements for quality, function, and materials, and types of construction in sufficient detail to enable engineering and design to be completed by the Contractor. In this specification section, each engineering and design discipline describes design intent and outlines the parameters to which the Contractor shall design.

3.1 Section 01012 DESIGN AFTER AWARD defines the design and performance criteria. The applicable building codes and standards shall be used as the minimum criteria to develop the construction documents unless more stringent criteria are defined for a specific area.

3.2 Section 01330 SUBMITTAL PROCEDURES (DESIGN BUILD) defines the format and submittal requirements in which the shop drawings shall be prepared by the Contractor.

4. COORDINATION BETWEEN THE VARIOUS DISCIPLINES

The Contractor shall be responsible for the coordination between design, engineering and construction disciplines in order to fulfill the requirements of this contract and to provide for a complete, integrated and functional design.

5. QUALITY OF WORK

Construction documents shall be sufficient to afford a clear understanding of the construction work required. The work shall be organized in a manner that will assure thorough coordination between the various details on the drawings, and between the drawings and the specifications. The Contractor shall crosscheck all work until all conflicts have been reconciled. The design manual will be followed in preparing the design. The US Army Corps of Engineers, Savannah District Design Manual, current edition, and Savannah District Guide Specifications are available on the Internet at: http://en.sas.usace.army.mil under Engineering Criteria.

Unified Facility Guide Specifications (UFGS) are available on the Internet at:

http://www.hnd.usace.army.mil/TECHINFO/ or http://www.ccb.org/ufgs/ufgs.htm

SpecIntact software which is used to edit the guide specifications is available for free at the same site.

These specifications shall be used as the basis for format and preparation of construction documents.

6. DESIGN REQUIREMENTS

6.1 General

6.1.1 The project shall be designed and constructed in accordance with the criteria contained herein using industry standard materials and efficient practices. The Contractor shall use materials and equipment accepted within the construction industry. The building design and the materials selected shall be of high quality, durable and easily maintained.

6.1.2 The Contractor shall prepare complete construction documents for all work designed as required by the RFP. The construction documents to be prepared include, but are not limited to, construction drawings, specifications, submittals, and design analyses as required in Section 01012, Design After Award.

6.1.3 The Contractor shall be responsible for the professional quality, code compliance, technical accuracy and coordination of all designs, drawings, specifications and other documents or publications upon which the design and construction are based.

6.1.4 The project specifications shall be prepared using UFGS guide specifications. If there is more than one UFGS guide specification for the same thing, use the one with an “A” suffix. If a UFGS guide specification cannot be found, contact the Savannah District to see if a guide specification exists. If a guide specification does not exist the Design/Build Contractor will prepare a job-specific specification. The UFGS shall be edited and adapted by the designer for this project, incorporating UFGS instructions and recommendations in the notes to specifier contained in the guide specs. The designer is to delete inapplicable portions of the guide specification and

revise and/or supplement, as required, the applicable portions to provide a complete project specification. Specifications shall be submitted at final design submittal in hard copy form that shows the text added and deleted with additions highlighted and deletions lined through but still readable. This feature is available in SpecsIntact. Following is a partial list of UFGS specifications required for this project. Other UFGS sections shall be added and submitted by the Design/Build Contractor as needed to address all other portions of the work in the accepted proposal.

Division 02 Site work

02231 CLEARING AND GRUBBING
02300A EARTHWORK
02315A EXCAVATION, FILLING AND BACKFILLING FOR BUILDINGS
02316A EXCAVATION, FILLING AND BACKFILLING FOR UTILITIES
02364 TERMITICIDE TREATMENT FOR SUBTERRANEAN TERMITE CONTROL
02510A WATER DISTRIBUTION SYSTEM
02531 SANITARY SEWERS
02547 BITUMINOUS PAVEMENT WITH BASE COURSE
02556 GAS DISTRIBUTION SYSTEM
02630 STORM-DRAINAGE SYSTEM
02754 CONCRETE PAVEMENTS FOR SMALL PROJECTS
02763 PAVEMENT MARKINGS
02770 CONCRETE SIDEWALKS AND CURBS AND GUTTERS
02821A FENCING
02921 SEEDING
02922 SODDING
02930 EXTERIOR PLANTING
02936 TURF – CENTIPEDE SEED

Division 3 Concrete

03100A STRUCTURAL CONCRETE FORMWORK
03150 EXPANSION JOINTS, CONTRACTION JOINTS, AND WATERSTOPS
03200A CONCRETE REINFORCEMENT
03300A CAST-IN-PLACE STRUCTURAL CONCRETE
03413A PRECAST ARCHITECTURAL CONCRETE (if used)

Division 4 Masonry

04200A MASONRY
04220A NONBEARING MASONRY VENEER/STEEL STUD WALLS (if used)

Division 5 Metals

05120 STRUCTURAL STEEL
05210A STEEL JOISTS
05300 STEEL DECKING
05450 PRE-ENGINEERED LIGHT GAUGE STEEL TRUSSED FRAMES (if used)
05500A MISCELLANEOUS METAL

Division 6 Woods and Plastics

06100A ROUGH CARPENTRY
06200A FINISH CARPENTRY

Division 7 Thermal and Moisture Protection

07311A ROOFING SHINGLES
07412 NON STRUCTURAL STANDING SEAM METAL ROOF SYSTEM (if used)
07510A MODIFIED BITUMAN ROOFING SYSTEM
07600A SHEET METALWORK, GENERAL
07840A FIRESTOPPING
07900A JOINT SEALING

Division 8 Doors and Windows

08110 STEEL DOORS AND FRAMES
08120 ALUMINUM DOORS AND FRAMES
08210 WOOD DOORS
08330A OVERHEAD ROLLING DOORS
08520A ALUMINUM AND ENVIRONMENTAL CONTROL WINDOWS
08710 DOOR HARDWARE
08810A GLASS AND GLAZING

Division 9 Finishes

09000 BUILDING COLOR AND FINISH SCHEDULE
09250A GYPSUM WALLBOARD
09310A CERAMIC TILE
09510A ACOUSTICAL CEILINGS
09680A CARPET
09900A PAINTING, GENERAL

Division 10 Specialties

10100A VISUAL COMMUNICATIONS SPECIALTIES
10160A TOILET PARTITIONS
10260A WALL AND CORNER PROTECTION
10430A EXTERIOR SIGNAGE
10440A INTERIOR SIGNAGE
10800A TOILET ACCESSORIES
10999 FIRE EXTINGUISHER CABINETS
10900A MANUFACTURED METAL LOCKERS

Division 11 Equipment

11020A ARMORY VAULT DOOR

Division 12 Furnishings

12320A CABINETS AND COUNTERTOPS
12490A WINDOW TREATMENT
12910 ENTRANCE MATS AND FRAMES

Division 13 Special Construction

13080A SEISMIC PROTECTION FOR MISCELLANEOUS EQUIPMENT
13100A LIGHTNING PROTECTION
13721 SMALL INTRUSION DETECTION SYSTEM
13851A FIRE DETECTION/ALARM SYSTEM, ADDRESSABLE SYSTEM
13930 WET PIPE SPRINKLER, FIRE PROTECTION
13935 DRY PIPE SPRINKLER SYSTEM, FIRE PROTECTION

Division 14 Not Used

Division 15 Mechanical

15070A SEISMIC PROTECTION FOR MECHANICAL EQUIPMENT
15080A THERMAL INSULATION FOR MECHANICAL SYSTEMS
15400 PLUMBING
15620A LIQUID CHILLERS
15895A AIR SUPPLY, DISTRIBUTION, VENTILATION, AND EXHAUST SYSTEM
15951A DIRECT DIGITAL CONTROL FOR HVAC
15990A TESTING, ADJUSTING, AND BALANCING OF HVAC SYSTEMS
15995A COMMISSIONING OF HVAC SYSTEMS

Division 16 Electrical

16771 TELEPHONE SYSTEM OUTSIDE PLANT
16070A SEISMIC PROTECTION FOR ELECTRICAL EQUIPMENT
16370A ELECTRICAL DISTRIBUTION SYSTEM, AERIAL

16375A ELECTRICAL DISTRIBUTION SYSTEM, UNDERGROUND
16415A ELECTRICAL WORK INTERIOR
16710A PREMISES DISTRIBUTION SYSTEM
16711A TELEPHONE SYSTEM OUTSIDE PLANT
16851A CABLE TELEVISION PREMISES DISTRIBUTION SYSTEM

7. RFP DESIGN AND TECHNICAL CRITERIA

All designs and construction document drawings and specifications shall be prepared to comply with the RFP. The RFP describes the design work that shall not be changed, and shall be included in the construction documents. All remaining design work shall be performed by the Contractor based on the design criteria as required by the RFP. No deviations from the criteria will be allowed unless prior approval is obtained from the Contracting Officer's Representative. All questions or problems encountered by the Contractor in following criteria shall be promptly submitted with recommendations to the Contracting Officer's Representative for approval.

7.1 Conflicts In RFP Criteria

Where the various elements of the RFP are in conflict, the following priority shall be used to establish precedence, unless specifically noted otherwise:

a. Specifications
b. Drawings

8. APPLICABLE BUILDING CODES AND STANDARDS

The codes listed in Appendix “A” and “C” shall be used as standards for building construction and life safety design. Where there is a conflict between the RFP and building codes, the most stringent shall apply. When codes are in conflict, the most stringent shall apply. This list is not intended to be a complete list. All work shall be designed and constructed to meet all state and Federal codes, standards and laws. Refer to the technical specifications for other standards and references not listed (Appendix “A” and Appendix “C”).

9. ENGLISH DESIGN

The design may be developed using English units of measure.

10. GENERAL CONSTRUCTION REQUIREMENTS

10.1 Government-Furnished Government-Installed Equipment (GFGI)

All existing loose furniture, equipment, computers and related hardware, video projectors, VCR's, TV's, drink machines, vending machines, microwaves, and refrigerators are Government furnished and installed. The Contractor shall provide utility connections and space for these items where identified in this RFP.

10.2 Provide an empty conduit and device box at the Front Entrance Automatic Doors. Conduit shall be sized 1-1/4” and shall stub-out into ceiling in an accessible area. Provide nylon pullstring in conduit. Device box shall be double gang type in wall at 48” AFF. Provide stainless steel blank coverplate over box. Box and conduit shall be used for future card reader system.

11. SITE CONDITIONS AND REQUIREMENTS.

11.1 Project Limits

The Contractor shall confine all work within the area shown on the site plan and in paragraph 12.1 below.

11.2 not used

11.3 Hazardous Materials and Contamination

The Government does not anticipate that the Contractor will be required to remove or dispose of any hazardous materials or waste during the site preparation phase of this project.

11.4 Disposal of Waste Materials

11.4.1 The Contractor shall identify, as a part of his submittals required by this contract, the specific disposal site or sites for any waste materials generated by the Contractor’s operations at Hunter Army Airfield.

11.4.2 The Contractor shall edit and submit the following UFGS as defined in Section 01012 DESIGN AFTER AWARD:

> 01355 ENVIRONMENTAL PROTECTION. In addition to other requirements within Specification 01355, the following SD-07 Certificates shall be listed requiring Government approval: specific disposal sites, documentation (i.e., weight tickets, etc.), and compliance of disposal by resale.

11.5 Demolition and Removals

The Contractor shall survey and stake-out the project boundaries before starting work. The existing site condition plan drawing provided in the RFP indicates existing conditions and locations of existing utilities. The Contractor may utilize the utilities during construction operations and may incorporate the utilities as part of the final project. If these existing utilities are determined to be inadequate for construction operations or incorporation into the final facility, they will be upgraded as part of the construction project. However, if the Contractor elects not to use the existing utilities, they will be demolished and removed as part of the construction project. Existing utilities that interfere with this project will be relocated. The information shown on the existing site condition drawing is the most recent data. The Contractor shall be responsible for furnishing an independent topographic survey of the project site, and all line and grade surveys, and as-built surveys of the construction. All demolition debris shall be removed to the landfill off post.

11.5.1 Contractor shall remove all remaining trees and stumps necessary to construct the new Marine Corps Reserve Center and associated construction as shown on the conceptual plans. Removal shall occur during design phase so that site is prepared for building construction by the end of design.

11.5.2 Timber Harvesting

The Government will harvest select trees on the site. Within two (2) weeks after conclusion of the Government harvesting operation, the Contractor will have removed from the site all limbs, stumps, and any other remains from the harvesting operation. The Government will coordinate the beginning of the harvesting operation with the Contractor to ensure that it is concluded before the Contractor initiates project site work. Any trees not selected for harvesting by the Government, that require removal to accomplish the project work, will be the responsibility of the Contractor.

12. NEW SITE DESIGN AND CONSTRUCTION

The concept site plan presents construction by others the general geometric layout for the site work. The Contractor shall design the paving, sidewalks, erosion and sediment control, and utilities including fire hydrants, irrigation street lights and erosion control plan.

12.1 Project Limits

The Contractor shall confine all work within the area of the project limits shown on the concept site plan.

12.2 Storm water Pollution Prevention Plan

A Storm water Pollution Prevention Plan (Best Management Plan) shall be designed and included in the design submittals shown in Section 01012. The approved plan shall be onsite at all times for inspection by EPA, Georgia Department of Environmental and Natural Resources Environmental Protection Division (DNR EPD), and Hunter Army Airfield environmental personnel. All activities in the approved plan shall be implemented. The Contractor shall control erosion and sedimentation during construction. Sedimentation of adjacent sites or downstream ditches will not be permitted. The plan shall be approved and permitted by Georgia DNR EPD.

12.3 Constraints

12.3.1 The new project grading and storm water system shall not impact the surrounding buildings. Construction shall not impact the existing drainage system adjacent to the site.

12.3.2 Building Setback Requirements

The building shall be located on the site in accordance with the DOD Antiterrorism/Force Protection Construction Standards for projects within a controlled perimeter.

Building Setbacks	Minimum acceptable
Unobstructed Space	(33 feet)
Adjacent Buildings	(33 feet)
Trash Containers	(82 feet)
Building front to edge of pavement for vehicles	(82 feet)

12.3.3 The hardwood trees and pines on the site shall be incorporated in the design, retained and protected during construction to the extent possible.

12.4 Access Drives, Parking And Sidewalks

Connections to existing asphalt or concrete pavements shall be accomplished by saw cutting the adjacent existing pavement.

12.4.1 Width Criteria

All pavement and radii dimensions in this section are from face of curb to face of curb. Minimum access drive width shall be 7.5 meters (24 feet). Minimum turning radius for all intersections shall be 6 meters (20 feet) except where fire truck access and semi-truck and trailer access is required. Designer shall consider the types of vehicles traversing and parking on these facilities. Vehicles shall include but not be limited to: passenger cars, emergency vehicles, garbage, fire trucks, military vehicles, delivery service, and utility vehicles. Contractor shall provide traffic control signs and

pavement markings. Parking stripes shall be white and handicap parking stripes shall be blue.

12.4.2 Curb and Gutters

All asphalt pavement in POV parking lot shall be bordered with 150 mm (6-inch) concrete curb and gutter 600 mm (2 feet) wide. All gradients shall provide positive drainage (no ponding). Curb cuts shall be provided as necessary for pavement drainage.

12.4.3 Pavement Thickness

Pavement structure shall be designed for actual vehicle loadings and frequencies. Access drives shall be asphalt pavement with graded crushed aggregate base course or Portland cement concrete. See the conceptual site plan for locations of each pavement type. Pavement structure thickness shall be in accordance with TM-5-822-5, Chapter 1 and TM 5-822-5, Chapter 3. Pavement structure shall be designed for a 20-year pavement life.

12.4.3.1 Concrete Pavement

A concrete joint layout plan shall be required for all concrete pavements. Joint spacing, joint types, and joint grading shall be shown. Concrete pavement thickness shall be designed for an equivalent 8,165-kilogram (18,000-pound) single axle load for the design vehicle loading and number of passes. Pavement life shall be 20 years. Concrete pavement shall be designed in accordance with TM 5-822-5, Chapter 1. Concrete pavement shall be non-reinforced except for odd shaped slabs. The number of joints shall be kept to a minimum by using the greatest joint spacing which will effectively control cracking. The maximum length to width ratio of the slabs shall be 125 percent. Joint sealant type shall be preformed compression seal.

12.4.4 Sidewalks

Sidewalks, minimum 1.83 meters (6 feet) wide, shall be provided as indicated on the concept site plan. Sidewalks shall be widened as necessary to meet building entrance and exit way widths. Sidewalks shall connect the parking areas to the building exits. Sidewalks shall be wire mesh reinforced concrete with a minimum nominal thickness of 100 mm (4 inches) with 2,109,300 kilograms per square meter (3000 psi) compressive strength. Contraction joints shall be spaced at 1.83 meters (6 feet) on center and expansion joints shall be placed at 15.24 meters (50 feet) on center and at the intersection of walks and curbs. Minimum cross slope on sidewalks shall be 2 percent.

12.4.5 Handicap Access

Ramps shall be provided for handicapped access. Number of parking slots and site access for the physically disabled shall be as required by ADAAG, UFAS and FS 795.

12.4.6 Parking

12.4.6.1 Parking shall be provided as generally indicated in the layout presented in the concept site plan. All parking shall be 90 degrees off-street parking. Handicap parking stalls shall be provided. Area lighting and landscaping shall reinforce the parking area in accordance with the Hunter Army Airfield Installation Design Guide while meeting functional and safety requirements and provide green space for the parking area required by the IDG.

12.4.6.2 Parking areas shall be paint striped and adequately drained. Parking stalls shall be 2740 mm by 5485 mm (9 feet by 18 feet). Paint markings shall be

100 mm (4 inches) in width. Traffic isles shall be 7,315 mm (24 feet) in width.

12.4.6.3 Parking area drainage shall sheet flow to inlets then into the storm collection system. Parking area slopes shall be adequate to provide proper drainage.

12.4.6.4 Parking area design shall conform to TM 5-822-3. Parking stalls and access drives shall be asphalt pavement with graded crushed aggregate base course. Pavement structure thickness shall be in accordance with TM 5-822-5, Chapter 3. The pavement structure shall be designed for a 20-year pavement life.

12.4.7 Fences

12.4.7.1 Chain Link Fencing. Chain link fencing is the type of structural barrier most commonly used and recommended for security Purposes. Chain link fencing will be used to enclose restricted areas where fencing is required. Mesh openings will not be covered, blocked, or laced with material that would prevent a clear view of personnel, vehicles, or material in outer perimeter zones/areas. In those instances where a commanding officer determines application of a covering to be more advantageous to protecting the asset within the fenced area, a waiver or exception request must be submitted per paragraph 1013 of the Marine Corps Physical Security Program Manual. The following standards apply:

a. Fabric. The standard fence fabric will be 9-gauge zinc or aluminum-coated steel wire chain link with mesh openings not larger than two inches per side and a twisted and barbed selvage at top and bottom.

b. Fabric Ties. Only 9-gauge steel ties will be used. If the ties are coated or plated, the coating or plating will be compatible with the fence fabric plating and coating to inhibit corrosion.

c. Height. The standard height of a security fence is eight feet. This includes a fabric height of seven feet, plus a top guard. Building connections will be higher. An additional four to five feet of fencing height should be added at the building connection point out at least 10 feet away from the building.

d. Fencing Posts, Supports and Hardware. All posts, supports, and hardware for security fencing will meet the requirements of Federal Specification RR-F-191J/GEN of 22 July 1981. All fastening and hinge hardware will be secured in place by preening or welding to allow proper operation of components, but prevent disassembly of fencing or removal of gates. All posts and structural supports will be located on the inner side of the fencing. Posts will be positively secured into the soil to prevent shifting, sagging or collapse in accordance with reference (n).

e. Reinforcement. Taut reinforcing wires will be installed and interwoven or affixed with fabric ties along the top and bottom of the fence to stabilize the fence fabric.

f. Ground Clearance. The bottom of the fence fabric must be within two inches of firm soil or buried sufficiently (concrete footings or gravel may be used) in soft soil to compensate for shifting soil.

g. Culverts and Openings. Culverts under or through a fence shall be of ten inch pipe or a cluster of such pipe. Openings under or through a fence will be secured with material of equal or greater strength than the overall barrier. All openings, which have an area of 96 square inches or greater and which

penetrate the restricted area perimeter barrier, will be protected by securely fastened 9 gauge wire mesh, framed and permanently bolted to the structure.

h. Fence Placement. No fence will be located so that the features of the land (its topography) or structures (buildings, utility tunnels, light and telephone poles, ladders, etc.) allow passage over, around or under the fence.

i. Top Guards. A top guard must be constructed on all perimeter fences and may be added on interior enclosures for additional protection. A top guard is an overhang of barbed wire or barbed tape along the top of a fence, facing outward (away from protected site) and upward at approximately a 45-degree angle. Top guard supporting arms will be permanently affixed to the top of fence posts to increase the overall height of the fence at least 1 foot. Three strands of 12-gauge barbed wire, equally spaced, must be installed on the supporting arms. Top guards constructed in a Y or triangular frame (double outriggers), which face both inward and outward, are acceptable. The top guard of fencing adjoining gates may range from a vertical height of 18 inches to the normal 45-degree outward protection, but only for sufficient distance along the fence to open the gates adequately.

12.4.7.2 Clear Zones

An unobstructed area or clear zone will be maintained on both sides of and between permanent physical barriers of restricted and non-restricted areas. Vegetation in such areas will not exceed 6 inches in height.

An inside clear zone will be at least 30 feet. Where possible, a larger clear zone should be provided to preclude or minimize damage from thrown objects such as incendiaries or bombs.

The outside clear zone will be 20 feet or greater between the perimeter barrier and any exterior structures, vegetation or any obstruction to visibility.

12.5 Building Connection to the Site

12.5.1 The finish floor shall be a minimum of 150 mm (6 inch) above finished grade.

12.5.2 Finished grade shall slope a minimum of 4 percent away from the new building for a distance of 2 meters (6 feet).

13 FOUNDATION AND GEOTECHNICAL DESIGN

13.1 Government Investigation

The Government has performed geotechnical explorations at the project site. The locations of and drilling logs of soil test borings are shown on the drawings included with this RFP. A report of the explorations and analysis is included in Appendix F. The “preliminary” report provides an overview of the soils and geologic conditions, and is furnished for informational and proposal purposes and not for final design; however, the recommendations provided in the report shall be considered to be minimum requirements that shall be incorporated into the final design and construction of the project.

13.2 Contractor Investigation

The offeror, to whom this contract is awarded, shall employ the services of a consulting professional geotechnical engineer experienced in geotechnical

engineering, who shall be responsible for determining site-specific geotechnical conditions. The site-specific geotechnical conditions, together with recommendations specific to the geotechnical design and construction requirements for the proposed project, shall be addressed in a “final” geotechnical report prepared by the consulting geotechnical engineer. The geotechnical report shall include, but not be limited to, the following:

13.2.1 Description of the site as to topography, existing surface conditions, and any other features that might influence the design.

13.2.2 Description of the investigation program and the methods used. Information obtained from the explorations performed by the Government can be used, supplemented by the minimum numbers of additional explorations specified below, and any further investigations as deemed necessary by the consulting geotechnical engineer. Subsurface exploration may include soil test borings, cone penetrometer test (CPT) soundings, and test pits. The investigation, sampling, and identification of subsurface materials shall be in accordance with methods and procedures described in ASTM D 420. Soil investigation and sampling by hollow-stem auger borings shall be in accordance with AASHTO T 251. Drilling and sampling with the "Standard Penetration Test" (SPT) split barrel sampler shall be in accordance with ASTM D 1586. The procedure shall be modified to provide for continuous standard penetration and sampling tests for the initial 12 feet of the boring. Beginning at a depth of 15 feet below grade, penetration and sampling tests every 5 feet and at each change in soil stratification or soil consistency are recommended. The location of the groundwater table, if encountered, shall be measured and recorded after 24 hours. If drilling techniques that prevent determination of the groundwater table are used, install at least one piezometer for every six explorations to measure the depth to the groundwater table. Classification of soils shall be in accordance with ASTM D 2487 or D 2488, as appropriate. Cone penetrometer test (CPT) soundings shall be in accordance with ASTM D 5778. Undisturbed soil sampling shall be in accordance with ASTM D 1587.

The following minimum numbers of explorations (soil test borings and/or CPT soundings) shall be performed by the Contractor;

Feature	Minimum Number of Borings
Building	4
Roads	1 per each 250 feet
Parking Areas	1 per each increment, or fraction, of 4,000 square feet

13.2.2.1 The depths of explorations shall be of sufficient depth to evaluate bearing capacity and settlement potential. However, beneath structures, explorations shall extend to a minimum depth of 25 feet below existing ground surface or below final design grade, whichever is lower. Beneath roads, hardstands, and/or parking areas, explorations shall extend to a minimum depth of 5 feet below existing ground surface or below final design grade, whichever is lower.

13.2.2.2 The Contractor shall be responsible for all applicable clearances and permits and for the protection of all underground utilities from damage during field investigations. Utility clearances and digging permits are required prior to drilling on the installation. Procurement of the clearances and permits shall be coordinated through the Contracting Officer.

13.2.3 Discussion of the subsurface soil conditions and stratigraphy and groundwater conditions.

13.2.4 Location plan of explorations.

13.2.5 Logs of explorations. Indicate on logs complete information on who, when, and how made. Show soil description, standard penetration resistance, N, or other type resistance, topsoil, water level observations, surface elevation and datum, and any other information gathered during the exploration.

13.2.5.1 Exploration locations shall be surveyed. Surveyed elevations and coordinates shall be provided on each exploration log. Elevations shall be in accordance with NGVD 29 and horizontal coordinates shall be in accordance with NAD 83 (Georgia State Plane Coordinates); accuracy to be plus or minus 3 feet horizontal and plus or minus 0.5 foot vertical.

13.2.5.2 Soil test boring logs shall show graphical representation of soil strata, location of each change by depth or elevation, location of each sample by depth or elevation, and number of blows for each 6 inches and amount of soil recovered for each sample location. Logs shall also indicate type and size of casing, type of drilling fluid, and type and size of drill bit. If no casing is used, indicate size of borehole. Indicate when boring is terminated due to refusal.

13.2.5.3 Soil classifications for final logs shall be based on the field classifications, the results of tests, and further inspection of samples in the laboratory by geotechnical engineers.

13.2.5.4 Include a chart illustrating the soil classification criteria and the terminology and symbols used on the boring logs.

13.2.5.5 Location of all explorations, logs of all explorations, and results of all laboratory testing shall be included on drawing sheets in the final “As-Built” drawings. If necessary, the logs and test results can be scanned onto the drawing sheets.

13.2.6 Laboratory test data shall be included in detail. Laboratory testing shall be in accordance with the requirements set forth in EM 1110-2-1906, Laboratory Soils Testing, EM 1110-2-1909, Calibration of Laboratory Soils Testing Equipment, and/or applicable ASTM standards. All laboratory testing shall be performed by a commercial testing laboratory which has been validated by the Engineer Research and Development Center Materials Testing Center (MTC) under the Corps of Engineers laboratory inspection and validation program. The laboratory shall be listed on the list of Corps of Engineers Validated Laboratories.

13.2.7 Notation of the location of strata containing organic materials, weak materials or other inconsistencies that might affect engineering conclusions.

13.2.8 Pavement design, or if not responsible for pavement design, pavement structural design data, including design California Bearing Ratio (CBR) and modulus of sub grade reaction.

13.2.9 Discussion of the facilities under design and recommendations regarding foundation support of the structures and slabs on grade, including soil bearing pressures, bearing elevations, foundation design recommendations and anticipated settlements, including total and differential.

13.2.10 Anticipation of, and management of, groundwater.

13.2.11 Discussion of site preparation and the effect of weather and construction equipment on soils during construction.

13.2.12 Areas requiring undercutting and removal of unsatisfactory soils.

13.2.13 Types of materials to be excavated and possible uses and/or disposition of the materials.

13.2.14 Fill and backfill placement procedures, including recommended moisture content range, and types of compaction equipment.

13.2.15 Results of pH tests and salinity tests and resistivity measurements, as appropriate, necessary to design corrosion control and grounding systems. The raw field data shall be included in the report.

13.2.16 Lateral earth pressures and pressure coefficients (active, passive, and at rest) and internal friction angles for design of walls below grade, including backfill, compaction and sub drainage, and their requirements.

13.2.17 Results of laboratory soils testing, to include classification and compaction tests, on representative samples of materials to be excavated at the project site that will be reused as structural fill and proposed borrow material (on the installation). Testing shall be as specified in subparagraph 13.8.1. If borrow material is to be obtained from sources off the installation, provide the name and location of the borrow source.

13.2.18 Provide calculations that support the recommendations for the foundation design. The calculations may be included in an appendix to the report. Calculations shall include loadings, capacities, safety factors, settlement analysis, bearing analysis, and references from which calculations are based. Any graphs and formulas shall be clearly indicated along with derivation of curve slopes and data derived from laboratory testing. Computer outputs shall also be included.

13.2.18.1 Three copies of the geotechnical report shall be submitted with the 60 percent submittal. If revisions are made to the 60 percent design submittal that require revisions to the geotechnical report, a revised report (three copies) shall be provided with the final design submittal. In addition, the pavement design and/or pavement structural design data shall also be submitted with the 100 percent Site/Utility Design Submittal.

13.3 Certification

The successful proposer shall be fully responsible for acceptable foundations, pavements and other geotechnical aspects for the proposed project. The proposer and his professional geotechnical engineering consultant shall certify in writing that the design of the project has been developed consistent with the site specific geotechnical conditions. The certification shall be stamped by the consulting professional geotechnical engineer and shall be submitted with the 60 percent design submittal. If revisions are made to the 60 percent design submittal, a new certification shall be provided with the final design submittal.

13.4 Foundation Design

13.4.1 General

Given the proposed site and the proposed structure, it is anticipated that shallow spread footings can be used for support of the proposed building.

However, it is important for the proposers and the Contractor to note that the borings performed within and near the building area indicate that the near surface soils are very loose to loose sands. Depending on the structural loads, it may be necessary to provide some form of ground modification or foundation improvement system to ensure an adequate level of protection against structural failure due to excessive uniform and/or differential settlement or bearing failure. All that may be necessary is to undercut the loose subgrade soils and backfill the excavated area with properly compacted structural fill. Each proposer, together with the architectural, structural, and geotechnical members of his team, should carefully evaluate and address the foundation support of the proposed structures in his proposal.

13.4.2 Allowable Bearing Pressure

Allowable soil bearing pressure shall be determined by the consulting geotechnical engineer. An adequate level of protection against structural failure due to uniform and/or differential foundation settlement or general shear shall be provided.

13.4.3 Footing Dimensions

Conventional shallow column footings and load-bearing wall footings shall have minimum dimensions of 30 inches and 24 inches, respectively, and shall be located at a minimum depth of 24 inches below finish floor or finish grade, as appropriate. Non load-bearing wall footings shall have a minimum width of 18 inches and shall be located at a minimum depth of 18 inches below finish floor or finish grade, as appropriate.

13.4.4 Foundations Over Utility Lines

No foundation shall be constructed over existing or new water, sewer, steam, natural gas, chilled water, industrial waste, storm drain and foundation drain lines. All foundations shall be stepped down to an elevation below the pipe invert elevation, or the utility line relocated.

13.4.5 Additional Requirements

Thickened slabs shall be required for walls and partitions which have a vertical load of 300 plf to 1100 plf. A separate isolated wall footing shall be used for walls having a vertical load in excess of 1100 plf.

13.5 Site Classification for Seismic Design

The project site shall be classified as Site Class D for the purpose of determining maximum considered earthquake spectral response accelerations Sms and Sm1 in accordance with Corps of Engineers Technical Instruction “TI809-04, Seismic Design for Buildings.”

13.6 Slabs on Grade

All interior slabs on grade, including storage rooms, shall be underlain by a moisture vapor barrier consisting of lapped polyethylene sheeting having a minimum thickness of 6 mils and a minimum 4-inch thick capillary water barrier of open graded, washed pea gravel, or crushed stone. Concrete slabs used in conjunction with conventional shallow foundations shall be jointed around columns and along supported walls to minimize cracking due to possible differential movement.

13.7 Soil Compaction

13.7.1 Soil compaction shall be achieved by equipment approved by the consulting geotechnical engineer. Soil materials shall be moistened or aerated as necessary to provide the moisture content that will readily facilitate obtaining the compaction specified with the compaction equipment used. Each layer of structural fill and sub grades shall be compacted to the following minimum percent of the modified Proctor maximum density, determined in accordance with ASTM D 1557:

Beneath structures and building slabs, to 5 feet beyond structure limits, around footings and in trenches	90 percent
Beneath streets and paved areas, except top 12 inches in fill and top 8 inches in native soil	90 percent
Beneath streets and paved areas, top 12 inches in fill and top 8 inches in native soil	95 percent
Beneath shoulders	90 percent
Beneath sidewalks and grassed areas	90 percent
Base course under paved areas	100 percent

The requirements shall be verified or modifications recommended by the consulting professional geotechnical engineer in the report wherever engineering, soils, or climatic factors indicate the necessity. Any modification to the specified compaction requirements shall require the approval of the Contracting Officer.

13.7.2 The Contractor, with recommendations and input from his consulting geotechnical engineer, shall edit and submit the following UFGS Specifications:

02300A	Earthwork
02315A	Excavation, Filling and Backfilling for Buildings
02316A	Excavation, Filling and Backfilling for Utilities

Compaction control using one- and two-point compaction tests with a family of curves as described in the Appendix of the Corps “preliminary” geotechnical report shall be included in the specification sections.

13.8 Construction Quality Control Testing

13.8.1 Prior to initiating any fill placement and/or compaction operations, representative samples of the soils which will be used as structural fill or sub grade, both suitable on-site soils and borrow material (borrow on the installation) shall be obtained and tested to determine their classification and compaction characteristics. The samples shall be carefully selected to represent the full range of soil types to be used. The moisture content, maximum dry density, optimum moisture content, grain-size and plasticity characteristics shall be determined. These tests are required to determine if the fill and sub grade soils are acceptable and for compaction quality control of the sub grades and structural fill. A minimum of 9 compaction tests shall be performed on materials classified as satisfactory for use.

Tests for the above soil properties shall be in accordance with the following:

Moisture Content	ASTM D 2216
Maximum Dry Density and Optimum Moisture	ASTM D 1557
Grain-Size (Wash No. 200, w/o Hydrometer)	ASTM D 422 and ASTM D 1140
Plasticity	ASTM D 4318

13.8.2 A representative number of in-place field density tests shall be performed in the sub grade of compacted on-site soils and in the structural fill and backfill to confirm that the required degree of compaction has been obtained. In-place density tests shall be performed in accordance with the sand cone method prescribed in ASTM D 1556; the use of nuclear gauges for density testing will not be permitted.

In-place density tests shall be performed in the material and at the minimum frequency specified below:

Material Type	Location of Material	Minimum Test Frequency
Fill, embankment and backfill	Beneath structures to 5-foot building line	One test per lift per each increment, or fraction, of 5000 square feet
Fill, embankment and backfill	Beneath paved areas	Once test per lift per each increment, or fraction of 5000 square feet
Fill, embankment and backfill	All other areas	One test per lift per each increment, or fraction, of 10,000 square feet
Sub grade	Under building slabs	One test per each increment, or fraction, of 3500 square feet
Sub grade	Under paved areas, excluding roads	One test per each increment, or fraction, of 4000 square feet
Sub grade	Roads	One test per each increment, or fraction, of 200 linear feet
Sub grade	Under footings	One test per every fifth column footing and for each increment, or fraction, of 100 linear feet of wall footings
Backfill	Utility trenches beneath roads and paved areas	One test per each increment, or fraction, of 150 linear feet per foot of depth of backfill
Backfill	Utility trenches beneath grassed areas	One test per each increment, or fraction, of 150 linear feet per 2 feet of depth of backfill
Fill, embankment and Backfill	Areas compacted by hand operated compaction equipment, other than utility	One test per foot of depth per each increment, or fraction, of 250 square feet, or for each

trenches	100 linear feet of long narrow (less than 3 feet wide) fills 100 feet or more in length

13.8.3 Any area that does not meet the required compaction criteria shall be reworked, and retested. If the moisture content of the soil is within the recommended range, additional compaction may be all that is necessary to increase the density. If the moisture content is not within the recommended range, then, the moisture content shall be adjusted to within the range, and the area recompacted.

13.8.4 All laboratory and field density testing shall be performed by a commercial testing laboratory which has been validated by the Engineer Research and Development Center Materials Testing Center (MTC) under the Corps of Engineers laboratory inspection and validation program. The laboratory shall be listed on the list of Corps of Engineers Validated Laboratories. http://www.wes.army.mil/SL/MTC/ValStatesTbl.htm

13.9 Soil Treatment

13.9.1 The pesticide applicator's principal business shall be pest control and the pesticide applicator shall be State certified in the U.S. Environmental Protection Agency (EPA) pesticide applicator category which includes structural pest control, and certified in the State of the project's location.

13.9.2 Pesticides shall be delivered to the project site in sealed and labeled containers in good condition as supplied by the manufacturer or formulator. Pesticides shall be stored, handled, and used in accordance with manufacturer's labels. Labels shall bear evidence of registration under the Federal Insecticide, Fungicide, and Rodenticide Act (MX), as amended.

13.9.3 The Contractor shall formulate, treat, and dispose of termiticides and their containers in accordance with label directions. Pesticides and related materials shall be kept under lock and key when unattended. Proper protective clothing and equipment shall be worn and used during all phases of termiticide application.

13.9.4 The Contractor shall provide a 5-year written warranty against infestations or reinfestations by subterranean termites of the buildings constructed under this contract. Warranty shall include annual inspections of the buildings. If live subterranean termite infestation or subterranean termite damage is discovered during the warranty period, and the soil and building conditions have not been altered in the interim, the Contractor shall:

a. Retreat the soil and perform other treatment as may be necessary for elimination of subterranean termite infestation;

b. Repair damage caused by termite infestation; and

c. Re-inspect the building approximately 180 days after the re-treatment.

13.9.5 Termiticides shall be currently registered by the EPA..

13.9.6 At the time of application, the soil moisture content shall be sufficiently low to allow uniform distribution of the treatment solution throughout the soil. Applications shall not be made during or immediately

following heavy rains or when conditions may cause runoff and create an environmental hazard.

13.9.7 The Contractor shall establish complete and unbroken vertical and/or horizontal (as necessary) soil poison barriers between the soil and all portions of the intended structure that may allow termite access to wood and wood related products. Application shall not be made to areas intended for use as a plenum air space. Surface treatments shall not be made for areas to serve as crawl spaces. Termiticide shall be applied as a coarse spray and provide uniform distribution unto the soil surface. Treatment shall be applied prior to placement of the vapor barrier and at least 12 hours prior to concrete placement. Where treated soil or fill material is not to be covered with a vapor barrier or waterproof membrane; adequate precautions shall be taken to prevent its disturbance. Soil or fill material disturbed after treatment shall be retreated as specified above before placement of slabs or other covering structures. Treatment of the soil on the exterior sides of foundation walls, grade beams, and similar structures shall be coordinated with final grading and planting operations so as to avoid disturbance of the treated barriers. Manufacturer's warnings and precautions shall be observed in the handling and use of such materials. Care shall be taken to prevent these chemicals from entering water supply systems, potable water supplies, or aquifers; and that they do not endanger plants or animals. The Contracting Officer shall be notified at least 48 hours prior to beginning of treatment and formulating, mixing, and application shall be performed in the presence of the Contracting Officer's representative.

13.9.8 Rates and methods of application shall be in accordance with the manufacturer's instructions on the pesticide label. Maximum application or dosage rates shall be used. If the pesticide contains less than the amount of active ingredient specified on the label, work shall be repeated with pesticides conforming to this specification.

13.9.9 The Contractor shall dispose of residual pesticides and containers off Government property in accordance with label instructions and EPA criteria.

13.9.10 The Contractor shall edit and submit the following UFGS Specification:

02364A TERMITICIDE TREATMENT MEASURES FOR SUBTERRANEAN TERMITE CONTROL

13.10 Decay Treatment

The Contractor shall be responsible for determining and implementing the appropriate treatment for prevention of subsurface induced decay.

13.11 Radon Mitigation

The design and construction of foundation walls, slabs, and crawl spaces shall include provisions for the reduction of radon entry and facilitate its removal. Radon mitigation shall comply with the requirements of EPA 402-R-94-009.

13.12 Soil Resistivity Testing

The proposer to whom this contract is awarded shall be responsible for all soil resistivity testing required for the design of cathodic protection systems for underground utilities and for the design of grounding systems.

13.13 Borrow

Borrow material (if needed) shall be selected to meet the requirements and conditions of the particular fill or embankment for which it is to be used. Borrow material shall be obtained from Hunter Army Airfield borrow areas. The contractor shall coordinate the use of Hunter Army Airfield borrow areas with the Contracting Officer. Necessary clearing, grubbing, and satisfactory drainage of borrow pits and the disposal of debris thereon shall be considered related operations to the borrow excavation. Borrow pits shall be neatly trimmed and drained after the excavation is completed. Borrow materials shall be free of any contaminants. Hunter AAF borrow pit permit and guidance is attached at the end of this Section.

14. LANDSCAPE DESIGN

A registered landscape architect shall do the landscape design. The landscape shall be designed using the Hunter Army Airfield Installation Design Guide as modified herein. Landscape plantings sizes and locations must conform to constraints of anti-terrorism standards in Appendix J. Graded and scarred areas shall be seeded. Existing grass not affected during construction shall be protected. Landscaping shall be absolutely minimum maintenance. Planting shall consist predominantly of tree species matching adjacent growth. Trees shall be planted in islands designed in the Contractor's parking layout with the intent of breaking up the linear image of the parking lots. A sodded berm with plantings shall be constructed along the east side of North Lightning Road to screen the Marine Corps Reserve Center from the road. Berm plantings shall be low maintenance and include trees, large and small screening shrubs, and all plant materials necessary to screen the facility as directed by the Contract Officer.

14.1 Turf

Centipede seed shall be provided for all graded and scarred areas. All existing grassed areas not graded or disturbed shall remain sodded. Contractor shall be responsible for proper care and watering of grass from the beginning of the turfing operation and continuing for 3 months after completion of sod placement. New trees and shrubs shall be maintained for a 12-month period after installation. Proper care means watering, fertilizing, cutting and weeding. Trees and shrubs shall require a 1 year warranty and seed shall require a 90-day warranty. Turf preparation shall include eradication of unwanted vegetation with Roundup and the use of a pre-emergent granular herbicide. Provide for a soil test that includes pH, potassium, phosphorus, calcium, magnesium, nematode count, and soil amendment recommendations (N-P-K). Post planting fertilizer for the turf after the seed is rooted shall be applied based on the soil analysis. Grass shall be mowed initially after achieving a 75 mm (3-inch) growth and then twice monthly thereafter.

14.2 Landscape Plantings

Landscaping shall emphasize low maintenance. Mulch shall be shredded cypress or pine bark. Mulch should have a minimum thickness of 4 inches. Also, there shall be a weed barrier under the mulch. Solid rubber guys with 610 mm stakes shall be used to stabilize newly planted trees. Landscaping shall be in accordance with the Hunter Army Airfield Installation Design Guide. Quality plant material shall be as specified by the American Standard for Nursery Stock, ANSI 260.1.

14.3 Approved Plant List

Large trees and small shrubs at entrances, as defined in the Hunter Army Airfield Installation Design Guide, shall be consistent with adjacent existing trees and plants.

14.4 Foundation Plantings

Foundation plantings will be required 3 feet away from the buildings and should be and 5 feet wide for all of the other buildings. Use low type of shrubs and ground covers appropriate to the sun orientation of each building. Place these foundation plantings along the main entrance side (the street side) of all buildings. Minimum size for all the shade trees shall be 2-1/2 inch to 3-inch caliper and minimum size for the large shrubs will be 7 gallons.

15. Not used

16. UTILITY LAYOUT

Coordination of all site work on the project, including utility work, is the responsibility of the Contractor. It is the Contractor's responsibility to confirm the specific locations of the existing utilities and to design and construct new utility services for the new buildings. All utilities, including electrical service, telephone and cable TV, shall be installed underground. New underground utility lines, including appurtenant structures such as valve boxes, manholes, vaults, etc. shall not be located under pavement, road shoulders or drainage ditches to the maximum extent practicable. Unless otherwise approved, placing utilities and culverts under existing roads shall be by jack and bore.

16.1 Backflow prevention valves, post indicator valves, transformers, electric switches, telephone/cable boxes, manholes, irrigation pump and controller, etc. shall be located in locations not immediately apparent to the facility users or personnel passing by the site. New utility lines shall not be located within 5 meters (15 feet) of the footprint of any future building as shown on the site plan.

16.2 Marking Of Utility Lines

Utility lines shall be marked with plastic marking tape. Plastic marking tape shall be acid and alkali-resistant polyethylene film, 150 mm (6 inches) wide with minimum thickness of 0.01 mm. Tape shall have a minimum strength of 12.5 MPa lengthwise and 10.5 MPa crosswise. The tape shall be manufactured with integral wires, foil backing or other means to enable detection by a metal detector when the tape is buried up to 1 meter deep. The tape shall be of a type specifically manufactured for marking and locating underground utilities. The metallic core of the tape shall be encased in a protective jacket or provided with other means to protect it from corrosion. Warning tapes shall be installed directly above all buried pipes or wires, at a depth of 450 mm (18 inches) below finished grade. Tape color shall be as specified below and shall bear a continuous printed inscription describing the specific utility.

Tape Color:

Red:	Electric
Orange:	Telephone, Telegraph, Television, Police, and Fire Communications
Blue:	Water Systems
Green:	Sewer Systems
Yellow:	Gas, Dangerous Materials

16.2.1 Tracer Wire

In addition to the plastic marking tape, tracer wire shall also be provided for all new underground utilities. Tracer wire shall be provided for all pipelines, including force mains but excluding storm drain and sanitary sewer lines. Tracer wire shall be provided for all electrical and communication

conduits and direct buried cables. Tracer wire shall be installed on the bottom of the trench just to one side of where the pipe, conduit, or cable contacts the trench bottom. The wire shall run continuously between and terminate at valve boxes on water and gas lines, regulator stub-ups on gas lines, sprinkler heads and valve boxes on sprinkler system lines, panel boxes on electrical lines, and other such aboveground appurtenances. Each end of the wire shall have an additional length of at least 0.6 m (2 feet) coiled up in the appurtenance. Tracer wire shall be insulated No. 12 AWG solid copper and of a type specifically manufactured for locating underground utilities. Insulation shall be solid yellow in color. Tracer wire shall be subject to approval by the Contracting Officer.

16.3 Metering

Area master meters shall be provided where water, gas and electricity are connected to base distribution lines. Water, electrical, and natural gas meters shall transmit usage data to the existing Hunter Army Airfield digital control system. Meters, interface devices and programming of the existing host shall be furnished as required to accomplish complete utility metering and remote usage monitoring as required by the installation’s utility managing agency.

17. PERMITS

The Contractor shall determine permit requirements as part of the design process and shall submit permit draft applications as part of the submittal process. Some of the permits required for this project are as follows:

1) Georgia Department of Natural Resources Environmental Protection Division (DNR EPD) Land Disturbing Activity Permit.
Contact:
Jan Sammons
Erosion and Sedimentation Control
Water Protection Branch
Environmental Protection Division
4220 International Parkway – Suite 101
Atlanta, GA 30354
404-675-1623

2) If the project disturbs greater than 5 acres: NPDES Permit from the Georgia DNR EPD, which requires a Notice of Intent; Erosion, Sedimentation and Pollution Control Plan; and a Comprehensive Monitoring Plan.

3) Erosion and sediment control plans must be submitted to USDA-NRCS for concurrence. Submit two sets of plans.
Contact: Remer Dekle
USDA-NRCS
122 West MLK Jr. Drive
Hinesville, GA 31313
(912) 876-6485, Ext. 102.

4) The Contractor shall verify what permits are necessary prior to construction.

5) Laws governing the permitting of land disturbance are currently under review and subject to change.

18. STORM DRAINAGE

18.1 Site Storm Drainage System

The site storm drainage system shall be designed for a 10-year return storm frequency. No ponding shall occur for the 10-year event. Storm drainage system design shall be checked for a 100-year return event to insure no flooding or adverse impacts occur down stream. Storm drainage design shall be in accordance with TM-5-820-4.

18.2 The storm drain collection system may consist of grassed swales, concrete inlet drop or curb inlets, concrete headwall and pipe systems. The proposed system shall tie to the existing pipe systems or the existing ditch to the northwest of the project site. Minimum pipe velocities shall be 0.6 m.p.s (2 feet per second) and the maximum shall be 1.5 m.p.s. (5 feet per second) with outlet erosion protection. The minimum pipe size for an open pipe system shall be 0.46 meter (18 inches) and 0.38 meter (15 inches) for a closed system.

18.3 The allowable pipe types shall include concrete pipe, Type III or IV, fully coated corrugated metal pipe as required. Pipe joints shall be water tight with gaskets.

18.4 Concrete inlets/catch basins may be poured in-place or corrugated and high density polyethylene pipe precast concrete. Metal grates or manholes shall be galvanized. Basins shall have 75 mm (3-inch) weep holes cast into the walls. The exterior of the weep holes shall receive a 6 mm (1/4 inch) wire mesh with a 300 mm (12-inch) width belt of crushed rock. Precast manhole or inlet rings shall connect with industry standard gaskets. Storm drain pipes shall be grouted into the concrete structures to provide a watertight connection.

18.5 Building downspouts shall connect to an underground storm drain collection system.

19. WATER AND WASTE WATER

19.1 The Contractor shall design and construct the new water supply and wastewater utility services for the new complex. The Contractor shall provide water service lines, new water distribution lines (as required), and connection to the existing water mains. The Contractor shall also provide new wastewater building laterals, new sewage mains (as required) and connection to the existing sanitary sewerage system. The water and sewage facilities shall be designed and constructed in accordance with the criteria contained herein. Placement of a buried utility main under a new building shall not be allowed. Minimum earth cover for the new utility lines will not be less than 680 mm (27 inches), except for fire water supply lines where the minimum cover shall be 760 mm (30 inches).

19.2 The Government anticipates that the Contractor will connect the new water laterals to the existing water distribution system and that sufficient pressure and quantity will be available for domestic and industrial uses. The design of the water distribution mains and service lines shall provide adequate quantity at sufficient pressure for domestic use and industrial use (vehicle washing, etc.). The Contractor shall determine minimum pressures in accordance with applicable plumbing and fire protection criteria.

19.3 The mains shall be designed and installed in accordance with NFPA 24 and applicable AWWA standards. Water mains shall follow existing streets or utility corridors. The design shall limit installation beneath pavement.

19.4 Design of the service lines shall be in accordance with the National Plumbing Code and applicable AWWA standards. A curb stop or valve shall be

installed near the point of connection to the main. Water service lines shall be equipped with suitable meters. Metering of fire service lines is not required.

19.5 The water distribution system in the fire truck parking or servicing area shall provide a fire hydrant dedicated to the fire truck water refilling operations.

19.6 Water Supply for Fire Protection

19.6.1 Interior and outside fire protection shall be designed in accordance with MILITARY HANDBOOK 1008C (MIL-HDBK 1008C). Fire flow test data dated March 12, 2003 from hydrant(s) in the vicinity of the site areas follows:

Hydrant No. 197

Static pressure = 45 psi
Residual pressure = 35 psi
Flow = 548 gpm

From these data and the specific fire protection requirements, the Contractor shall determine the need for additional water supply components such as fire pumps, water storage, or new connection to off-site water mains (perhaps several blocks from the building site).

19.6.2 The Contractor shall provide the required water flow and pressure for the interior and outside (hose stream) demand. Fire pumps and storage shall be provided as required to meet the required water demand. Connection to off-site water mains shall be considered the most desirable solution to water supply needs. Fire pumps (if required) shall be designed and installed in accordance with NFPA 20. Fire pumps shall be electric motor driven. Water storage (if required) shall be designed and installed in accordance with AWWA D100.

19.6.3 The fire sprinkler supply line shall include a post indicator valve with a tamper switch wired to the building fire alarm panel and a double check valve assembly backflow prevention device equipped with a flow detection meter. The backflow prevention device is located in the building.

19.7 Wastewater

19.7.1 The wastewater collection and conveyance system shall be designed in accordance with the Water Pollution Control Federation Manual of Practice No.FD-4, Design of Wastewater and Storm water Pumping Stations, and No. FD-5, Gravity Sanitary Sewer Design and Construction. In addition, the designer shall comply with specific State and local regulations that apply.

19.7.2 If a sewage pump station is necessary, the Contractor shall provide (as a minimum requirement) a duplex submersible sewage pump station with a 1,524 mm minimum diameter reinforced concrete wet well, with aluminum cover. All electrical components and controls shall be included.

19.7.3 The wastewater conveyance system shall comply with all the above requirements and shall be compatible with the wastewater to be conveyed. The materials specified shall withstand the effects of the wastewater and not deteriorate as a result of pollutants in the wastewater.

19.7.4 Contractor shall verify if existing wastewater conveyance system is sized adequately to accept additional wastewater flow generated by this project.

21. ARCHITECTURAL DESIGN REQUIREMENTS

21.1 General

The Marine Corps Reserve Center shall meet the functional requirements described herein and shall comply with the Hunter Army Airfield Installation Design Guide, which includes split faced concrete masonry walls will also include brick veneer at contractor's option and asphalt shingle roof. The exterior shall be designed for durability and attractiveness with minimal required maintenance and shall carry the architectural theme which is compatible with existing structures on the base. The building colors and exterior appearance shall be submitted to the Hunter Army Airfield Architectural Review Board for approval at 60% design prior to proceeding with the final design.

21.2 Applicable Codes And Standards

Applicable codes and standards are listed in Appendix C.

21.3 Not Used.

21.4 Accessibility

This facility is handicap accessible. See Section 01010 – para 1.7

21.5 Sustainable Design

This facility has a goal of achieving 25 or more points using the SPIRIT Project Rating Tool for Sustainable Design. Architectural contributions include building envelope characteristics, solar control and day lighting, views, indoor air quality, environmentally preferable materials selections, salvage/reuse opportunities, waste reduction, and close collaboration with all team members and User to synthesize successful sustainable design solutions.

21.6 Construction Type, Fire Protection and Life Safety

This facility shall comply with MILHDBK 1008C; including EC1110-1-92 dated 21 June 2000. MIL HDBK 1008c, requires compliance with UBC for construction type, occupancy separation and features related to location on property and compliance with NFPA 101 for egress and life safety. It also contains specific requirements contained in the document itself. See Appendix C for additional code analysis information.

21.7 Gross Area

The gross area of this facility shall not exceed 43,368 square feet, measured in accordance with TI 800-1. Information shown below is an overview of gross area calculation requirements. Refer to TI 800-1, Chapter 5, paragraph 1.c for specific instructions. Gross area cannot exceed the DD 1391 limit and may exceed the limit of the RFP floor plan.

21.7.1 Enclosed Space

The gross area includes the total area including all enclosed spaces as determined by the outside dimensions of the building.

21.7.2 Half Space

One-half of the area will be included in the gross area for covered raised loading platforms and covered exterior usable areas such as covered porches and covered walkways.

21.7.3 Excluded Space

Open paved areas; roof overhangs and soffits for weather protection; uncovered ramps; uncovered stoops; covered unpaved areas; and utility tunnels and raceways will be excluded from the gross area.

21.8 Exterior Construction

This facility shall be designed and constructed to provide a watertight durable facility consistent with industry standards and compliant with model building and energy codes. Appearance, materials and colors shall comply with the IDG. The following paragraphs are an overview of the exterior construction requirements.

21.8.1 Exterior Walls

Primary exterior wall finish shall be split faced concrete or brick veneer at contractor’s option. Wood trim is not permitted. A sample masonry panel per UFGS is required. Louvers shall be storm-resistant profile and shall have enclosed drainable sill pan and bird screen. Insulated metal panels shall be flat (not corrugated), shall have concealed fasteners (exposed fasteners are not permitted), and shall have manufacturer’s 20-year material and finish warranties the same as SSMR roof panels per UFGS. Joint sealants used at building exterior shall have a service life for the exposure condition of at least 10 years, retaining elasticity and seal.

21.8.2 Asphalt Shingle Roof (Base Bid)

Roof shall be pitched. Roof covering shall be architectural grade fiberglass reinforced asphalt shingles on a nailable roof deck. A nailable roof deck shall consist of a rigid insulation board bonded to a top layer of a nailable material such as Oriented Strand Board (OSB) with a ¾” air space between. The composite roof deck shall be screwed to the metal deck described in 25.5.5. Gutters and downspouts are required. Provide downspout boots at all downspouts. Concealed gutters are not permitted. Roof color shall be “Miami Red.” Roof detailing shall be in accordance with NRCA Roofing and Waterproofing Manual recommendations and standard details. Cap flashing and coping shall be .032 aluminum. Joint sealants used at building exterior shall have a service life for the exposure condition of at least ten years, retaining elasticity and seal. VMF Bay will have flat roof with minimum ¼ inch slope and 3 ply built-up roofing.

21.8.2.1 Standing Seam Metal Roof System (Bid Option No. 6)

Standing seam metal roof and gutter system would be an alternate, the roof system will include an ice and water barrier on rigid insulation board, R-30, over performed, galvanized metal roof deck on structural metal truss/ joist system over the structural steel building frame. Roof color shall be “Colonial Red.”

21.8.3 Insulation

Provide a complete thermal envelope. All water and sprinkler pipes must be inside the thermal envelope. Insulation shall not be placed directly on acoustic tile ceiling panels. The minimum “R” values to be met for the

complete walls or roof/ceiling systems are to be determined by design build team

21.8.4 Not used

21.8.5 Not used

21.8.6 Exterior Signage

Provide 12-inch high architectural PL-CK letters at building faces indicating four digit building number and provide freestanding facility entrance sign in brown color only.

21.8.7 Omitted

21.9 Interior Construction
The following paragraphs are an overview of the interior construction.

21.9.1 Room Sizes

Room sizes shown on the concept floor plan and in Appendix B are minimal approximate clear space. Adjustments to room sizes may be acceptable if minimum requirements are met and furnishing and functioning of the rooms are unaffected.

21.9.2 Sound Control

Spaces requiring sound control shall have ratings per paragraph 31.7. This includes all door and ceiling treatments as needed to achieve this performance for the entire space.

21.9.3 Doors And Frames

21.9.3.1 Interior doors may be metal or solid core wood. All metal doors will be minimum of 16 gauge. Doorframes shall be metal. Doors and frames shall be factory fabricated in accordance with SDOI SDI-100. Doors and frames shall be installed in accordance with DH1 A115.IG-94. Door grade shall be heavy duty (Level II). Exterior doors shall be insulated. Double doors and frames shall not have center mullions. Exterior doors and frames shall be designation G60 galvanized. Doors and frames shall be prepared (reinforced, drilled and tapped) to receive hardware conforming to the templates and information provided under paragraph Hardware. Rubber silencers shall be furnished for installation into factory pre-drilled holes in doorframes. Exterior doors shall have top edges closed flush and sealed against water penetration. Interior doors shall be solid core center matched oak veneer.

21.9.3.2 Fire rated door assemblies shall bear the listing identification label of a nationally recognized testing laboratory qualified to perform test of fire door assemblies in accordance with ASTM E 152 and having a listing for the tested assemblies.

21.9.3.3 Entry doors and doors to all public spaces and utility spaces shall be a minimum size of 7 feet high x 3 feet wide x 1 ¾ inch thick.

21.9.3.4 Sealant to provide a weather tight structure.

21.10 Storefront System

Doors and frames at Main Entrance shall be medium stile doors in aluminum storefront system. Extrusions shall comply with ASTM B 221, Alloy 6063-T5. Aluminum sheets and strips shall comply with ASTM B 209, alloy and temper best

suited for purpose. Fasteners shall be hard aluminum or stainless steel. Systems shall be designed to comply with Antiterrorism/Force Protection Construction Standards. See Appendix J.

21.10.1 Finish – Shall be color anodized in compliance with IDG standards.

21.10.2 Frames – Shall be double-glazed and shall have a minimum total average unit thermal resistance of R value 1.92. Minimum metal wall thickness shall be 1/8 inch, except for glazing beads, moldings and trim which shall be not less than 1/16 inch. Frames that are to receive glass shall have removable snap-on glass stops and glazing beads. Joints in frame members shall be milled to hairline watertight fit, reinforced, and secured mechanically be steel clop arrangement or by screw spline attachment.

21.10.3 Doors – Shall not be less than 1 ¾ inch thick. Doors shall have narrow stiles and rails fabricated from extruded aluminum hollow seamless tubes or from a combination of open-shaped members interlocked or welded together. Doors shall be double-glazed and shall have a minimum total average unit thermal resistance R value of 1.92.

21.10.4 Coiling Doors shall have insulated slats, perimeter weather seals and shall be motorized.

22. WINDOWS, GLAZING, FINISHING, HARDWARE AND INTERIOR PARTITIONS

22.1 All windows shall be aluminum windows conforming to AAMA 101. Windows shall be commercial grade non-operable type. Windows shall be double-glazed and shall be designed to comply with Antiterrorism/Force Protection Construction Standards. See Appendix J.

22.2 Not used.

22.3 Insulating glass shall be Class A pre-assembled units of dual seal construction conforming to ASTM E 773 and ASTM E 774. Glazed units must have minimum ½ inch airspace between panes. Glass for outer pane insulating units shall be annealed, Type I, transparent flat type, bronze tinted, quality q3. Glass for the inner pane insulating units shall be ¼” laminated clear.

22.4 Tempered glass shall be kind FT fully tempered transparent flat type, bronze tinted, quality q3. Tempered glass shall comply with ASTM C 1048 and ANSI Z97.1.

22.5 Finish – shall be color anodized in compliance with IDG standards.

22.6 Hardware to the extent possible, all hardware shall match in style and finish and be from one manufacturer. All hardware shall be Grade 1 and shall comply with BHMA standards indicated below:

22.7 Hinges shall conform to BHMA A156.1. Hinges used on metal doors and frames shall also conform to BHMA A156.7. Hinges used on exterior doors and fire rated doors shall be stainless steel, ball bearing type installed with stainless steel screws. Hinge size shall conform to the manufacturer’s printed recommendations. Provide 1-1/2 pairs of hinges on each single door and three pairs on double doors for doors up to 3 feet x 7 feet high. Ball bearing hinges shall be provided at all doors equipped with closers. All exterior doors to be equipped with protected hinges per AR 190-51, App “B”.

22.8 Bored locksets, latchsets, and strikes shall be series 4000 and shall conform to BHMA A156.2, Grade 1. Provide a lockset at all interior doors to public and service support spaces and all utility spaces.

22.9 Mortise locksets, latchsets and strikes shall be series 1000 and shall conform to ANSI/BHMA A156.13, operational Grade 1. Strikes for security doors shall be rectangular without curved lip. Mortise type locks and latches for doors 1 ½ inch thick and over shall have adjustable bevel fronts or otherwise conform to the shape of the door. Mortise locks shall have armored fronts. Mortise locksets shall be used on all exterior doors to the greatest extent possible.

22.10 Lock cylinders shall comply with BHMA A156.21. Exterior door thresholds shall be extruded aluminum and shall provide the proper clearance and form an effective seal with the door bottom weatherseal.

22.11 Weather seals for head and jambs shall be extruded aluminum retainers with minimum 1/13 inch wall thickness with industrial/commercial grade vinyl, neoprene, silicone rubber or polyurethane inserts. Weatherseals shall be installed snug to door and secured in place as recommended by the manufacturer. Provide an extruded aluminum drip cap at the head of all exterior doors without head protection.

22.12 Exterior door bottom seals shall be extruded aluminum retainers with minimum 1/13 inch wall thickness. Seals shall be designed for the intended purpose and shall provide an effective seal with the threshold to exclude light, drafts, dirt, water and insect entry.

22.13 Keying – All keyed locks shall be “Master Keyed” with seven pin interchangeable cores, removable by control key, with four sets of master keys furnished to the Contracting Officer. Furnish four sets of keys for each lock, four blank keys for each lock, on extra set of cores and a key control storage system, conforming to ANSI A 156.2/BHMA 601. Change keys for locks shall be stamped with change number and the inscription “U.S. Property – Do Not Duplicate”. Provide control key directly to PWBC Locksmith Shop.

22.14 Surface type door closers shall conform to BHMA A156.4, Grade 1, Series CO2000 with options PT –4F (exterior doors) and PT-4H (interior doors). Closers for out-swinging exterior doors shall have parallel arms.

22.15 Exit devises and Exit Device Accessories shall conform to BHMA ANSI/BHMA A156.3, Grade 1.

22.16 Door Protection Plates shall be aluminum or stainless steel.

22.17 Interior Partitions. Non-load bearing studs shall be prefabricated minimum 22 gauge steel, C-shaped, conforming to ASTM C 645. Regular and Type X gypsum board shall conform to ASTM C 36. Water resistant gypsum board shall conform to ASTM C-630 regular or Type X with water resistant paper face. Party wall partitions separating Men’s and restrooms shall extend a minimum of 8’-0” above the ceiling to provide a security and sound barrier.

23. EXTERIOR FINISHES

23.1 The finished exterior colors must match the Hunter Army Airfield color scheme. The contractor shall propose all colors using Savannah District Guide Specification 09000, Building Color and Finish Schedule.

23.2 Roof – The color of the roof shall be “MIAMI RED” and as approved by the Contracting Officer and shall be in keeping with the Hunter Army Airfield color scheme.

24. INTERIOR FINISHES required for the facility are described in Appendix G and in the following paragraghs.

24.1 Ceramic tile shall be standard grade conforming to ANSI A137.0. Ceramic mosaic tile shall be unglazed porcelain with cushion edges. Glazed wall tile shall be cushion edged with matte glaze. Ceramic tile floors shall be installed in accordance with TCA-01 method F112. Wall tile shall be installed in accordance with TCA-01 method W223, where not installed over CMU tile shall be installed over concrete backerboard. In showers TCA-01 method W223 shall be used.

24.2 Vinyl Composition tile (VCT) shall conform to ASTM F 1066, Class 1 or Class 2, composition 1, asbestos free. Tile shall have a minimum thickness of 1/8 inch. Tile shall be installed with adhesive in accordance with the manufacturer’s installation instructions. Sheet vinyl in darkroom shall be a chemical resistant type that is approved by the manufacturer for that application.

24.3 Carpet shall be first grade quality carpet free of any blemished or poorly dyed areas or manufacturing defects. The carpet for all areas shall be as follows: the yarn type shall be 100% premium quality solution dyed Dupont Lumena, multi-level loop pattern, gauge 5/64, stitch rate 11 per inch, pile thickness .148%, tufted yarn weight of 28 ounces per square yard, average density 6,810 Oz/yd3, primary backing is 100% woven synthetic, secondary backing is 100% woven synthetic, primary precoat is 100% vinyl non-aqueous closed cell polymer Flooring radiant panel test is NFPA-253, direst glue down mode class I, NBS smoke chamber NFPA-258 flaming mode.

24.3.1 The contractor shall provide a minimum of 3% percent extra of each pattern and/or color of the rolled carpet.

24.4 Painting – The term painting shall include all emulsions, enamels, paints, stains, varnishes, sealers, cement-emulsion fillers and other coatings, whether used as the prime, intermediate or finish coat. Painting shall conform to the requirements of the UFGS grade specification and shall be three coat work for all interior and exterior surfaces except where specifically noted otherwise by the guide specification.

24.4.1 Paint containing lead in excess of 0.06 percent weight of total nonvolatile content (calculated as lead metal) shall not be used. Paint containing zinc gromate or strontium chromate pigments shall not be used. Low-emitting materials are strongly recommended to improve indoor air quality and to help achieve the sustainable design goal addressed in Paragraph 21.5 Sustainable Design.

24.4.2 All colors, both interior and exterior, shall be submitted in the Structural Interior Design (SID) package for approval. Exterior equipment such as mechanical equipment, transformers, etc. shall be painted as per the Installation Design guide.

24.5 Acoustic Ceiling tiles – maximum size allowed shall be 24 inch x 24 inch. 24 inch x 48 inch ceiling tiles will not be permitted. A moisture resistant acoustic ceiling tile shall be used in restrooms and janitor closets.

24.5.1 Acoustical units shall conform to ASTM E 1264, Class A.

24.5.2 Suspension system shall conform shall conform to ASTM C 635, standard of fire rated, exposed grid, intermediate duty.

24.5.3 Ceiling attenuation class (CAC) range of acoustical units, when required, shall be determined in accordance with ASTM E 1414. Test ceiling shall be continuous at the partition and shall be assembled in the suspension system in the same manner that the ceiling will be installed on the project. System shall be tested with all acoustical units installed.

24.5.4 Minimum CAC of 35 shall be required in office spaces and sound attenuation between classroom and restroom.

24.6 Finishes – Finishes shall be durable and convey the appropriate aesthetics such as would be expected for a typical facility/space of this type in the commercial sector. Sustainable design considerations shall be incorporated into finish selections and building aesthetics.

24.7 Lockers – Provide single and double tier lockers and benches in locker rooms. Provide completely installed lockers with filler strips, corners and finish strips. Provide handles to accommodate users padlocks. Anchor lockers securely to floor. Lockers shall be set on a raised concrete base with a ceramic tile finished edge. Provide clear finished hardwood benches where indicated. See appendix “B” for sizes and number of lockers.

24.7.1 General Construction – All lockers shall be pre-assembled, with all seams and joints welded for rigidity and durability. No bolts, screws or rivets shall be used in the assembly of the locker bodies.

25 ACCESSORIES

The following bath accessories shall be provided in toilet and shower areas unless otherwise indicated. Metal finish shall be either stainless steel, with No. 4 satin finish or carbon steel, copper alloy, or brass with chromium plated, bright finish. To the extent possible, bath accessories shall be of one manufacturer, style and finish.

25.1 Grab bars shall be 18 gauge, 1 ½ inch OD Type 304 stainless steel with concealed mounting, capable of withstanding 227 kg vertical load without coming loose or obvious deformation.

25.2 Glass mirrors shall be Type I, flat Class 1-clear, quality q1, 6.4 mm thick.

25.3 Tilt mirror – provided in compliance with ADAAG and in conformance with requirements of glass mirrors, and ASTM C1036.

25.4 Toilet tissue holder shall be Type II surface mounted, with two rolls of tissue and non-locking type.

25.5 Shelf, Metal – provided in each shower stall, shall be minimum 18 gauge, stainless steel, with hemmed edges. Shelf shall be 12 inches long by 4 inches deep.

25.6 Combination Paper Towel Dispenser/Waste Receptacle – Units shall have a capacity of 600 folded towels. Waste receptacle shall have a capacity of not less than 18 gal.

25.7 Sanitary Napkin Dispenser – Units shall be stainless steel with removable leak-proof receptacles for disposal liners.

25.8 Soap Dispenser – Units shall be surface mounted, liquid type with stainless steel tank with 1.2 liter capacity and corrosion resistant all-purpose valve that dispenses liquid soaps, lotions, detergents and antiseptic soaps.

25.9 Shower Curtain Rods – Provide extra heavy duty 1 ¼ inch diameter, 18 gauge stainless steel rods with 8 gauge vinyl fabric shower curtain at each shower and each dressing cubicle.

25.10 Mop and broom hangers shall be provided in each Janitor Closet. The hangers shall be fabricated from 20 gauge stainless steel and be equipped with four rubber cam holders, ribbed for gripping.

25.11 Miscellaneous Equipment as follows shall be provided where indicated on the Floor Plan, Site Plan or as required by applicable code.

25.12 Fire Extinguishers and Cabinets – Provide UL-Rated 4A:60B:C, 10-lb. Nominal Capacity Multi-Purpose Dry Chemical type. Semi-Recessed cabinets with a baked enamel finish on a heavy gauge steel box shall be provided when in public areas. Door shall be full glass with full-length piano type hinge. Locations shall be as per NFPA 10.

25.13 Window Blinds – Provide window blinds with horizontal perforated vinyl slats in all exterior windows except storefront windows.

25.14 Front Projection Screen – Provide ceiling recessed projection screen with automatic ceiling closure, electrically operated with vinyl white matt screen with woven fiberglass backing in sizes indicated on the drawings.

25.15 Not used

25.16 Corner Guards – Provide vinyl/acrylic extruded high impact corner guards at all corners of all main corridors. Attachment shall be with self-adhesive tape.

25.17 Not used.

25.18 Toilet and Shower Partitions – Provide floor supported overhead braced type with solid polyethylene panels. Urinal screen shall be floor supported solid polyethylene panels.

25.19 Millwork – Millwork shall be custom grade as defined by the AWI Quality Standards. All exposed surfaces shall be covered with plastic laminate. Countertops shall be plastic laminate with a backing sheet on the underside. A 3 ½ inch back splash shall be provided where counter is adjacent to walls. Shelving shall be ¾ inch plywood with an edge strip and shall be anchored to CMU partitions or metal studs. Anchoring to gypsum wallboard is not acceptable.

25.20 Guard Posts – Guard Posts shall be concrete filled 8″ diameter steel pipe, galvanized, projecting 4′-0″ above the pavement and 4′-0″ below. Posts shall be set in a 2′-0″ diameter concrete foundation extending 6″ below the bottom of the post.

25.21 Vault

25.21.1 The Armory space shall be designed in accordance with criteria in MIL-HDBK-1013/1A to provide at least 10 minutes of delay time against low and medium threat severity levels of forced entry. The space is required to be built to the construction standards described in MIL-HDBK-1013/1A for Class A vaults. The reinforced concrete must have minimum 28-day compressive strength of at least 3000 PSI and the floor, walls, and ceiling/roof components of this space must all be cast in place and at least eight inches thick. The door into the Armory space must be a GSA-Approved and labeled Class 5 Security Vault Door that conforms to Federal Specification AA-D-00600. Provide door manufacturer's modified standard or custom Day Gate, designed for use with the vault door furnished, for access control and weapons issue. Except for the door opening, penetrations and openings through the structural "security" envelope of the floor, walls, and/or ceiling/roof of the Armory space that are 96 sq. in or greater with the least dimension greater than 6 inches are not allowed.

25.21.2 Where the perimeter walls of the Weapons Storage area (WSA) spaces are part of the facility exterior walls, the vault walls shall be set back from the exterior part of the exterior wall to allow at least 4 inches for the normal wall facing to cover the vault walls.

25.21.3 Provide GSA-Approved and labeled Class 5 Security Vault Door that conforms to Federal Specification AA-D-00600. Door[s] for normal entry access shall be Class 5, either Type IIR- right opening swing without optical device or Type IIL- left opening swing without optical device as determined by design arrangement, Style K- Key change combination lock, Design S- single lock. The combination lock that is required as part of Security Vault Door is an electronic-mechanical item that must be Year 2000 Complaint. Vault Door and Frame must come as a Package Unit from the Vendor.

25.21.4 Day Gate

Provide vault door manufacturer's modified standard or custom day gate designed for use with vault door furnished, for access control and weapons issue. Day gate construction shall be minimum 10 gage steel flattened and expanded metal welded to a 1 inch minimum steel channel or angle welded frame; expanded metal pattern shall be 1 by 1.75 inch diamond grid. Maximum clearance between sides, top and bottom of the day gate and the vault door frame and floor shall be 1 inch when the day gate is closed. Provide gate hinged on same side as the vault door, swinging to 180 degrees into the vault from closed to open positions. Provide day gate with locking device operable from both sides; the outside by key and the inside by key, knob, lever, or deadbolt; the inside locking device shall either be positioned so that it is not accessible from the outside or it shall be operable by key only. Day gate shall include an issue port opening, cover with locking mechanism, and shelf. The issue port shall be a framed opening welded to the day gate frame with a hinged door cover. The hinged door shall be minimum 18 gage steel and shall be lockable from the inside only. The opening shall be 8 inches high and 12 inches wide; tolerances are plus or minus 0.125 inch. When the issue port is closed, the hinged door cover shall match the opening to within 0.0625 inch. The shelf shall be minimum 16 gauge stainless steel, 12 inches deep by 12 inches wide to match the port opening, and shall be capable of withstanding a vertical force of 100 lbf at any point without deformation. Provide the manufacture's standard painted finish to match that of the
vault door. The day gate shall not interfere with the operation of vault door inner escape device.

26. LIFE SAFETY DESIGN REQUIREMENTS

See Appendix “C” included in this RFP.

27. COMPREHENSIVE INTERIOR DESIGN

27.1 The preparation of the Comprehensive Interior Design is part of Base Bid Item Number 1. Additionally, Base Bid Item Number 2 will include Contractor presence during furniture installation by the furniture vendor to resolve any facility problems or conditions that prevent or inhibit the furniture or furnishings installation. The Contractor will repair any minor damage done to the building by the furniture installation vendor that the vendor does not repair. This includes scuff, scratches, dents, breaks and any similar minor damage. Additionally, the contractor will clean any areas soiled by the vendor that the vendor does not clean. The procurement and installation of the items specified in the Comprehensive Interior Design will be accomplished separate from this contract. The CID Submittals shall be in accordance with the Savannah District Interior Design Presentation Format. The furniture shall be

coordinated with the prepared and approved Furniture Placement drawings developed in the SID package.

27.2 Definition. The CID shall involve all the furniture-related components necessary to complete the interior environment. The necessary components shall include all loose furniture/furnishings/artwork.

27.3 CID Philosophy. The CID for this facility shall be coordinated in color, texture, pattern, size, form and function with building footprint and the SID. Furnishings submitted for approval shall reflect the image and style presented in the architecture to further support the corporate image, and with the function and mission of the facility occupants considered. All furniture/furnishings shall be selected under the guidance of the National Defense Authorization Act – FY 2002, S1438, Title VIII, Subtitle B, Sec 811, Para 2410 which states UNICOR is no longer a mandatory source for furniture and a waiver is not required from UNICOR on items before selecting from GSA Schedules. However, UNICOR shall be considered as a vendor to determine if UNICOR offers the “Best available” product in terms of quality, price, and timeliness. If a UNICOR product is not the “best value,” then GSA schedules shall be used for selection of furniture/furnishings. Three GSA or Unicor vendors shall be considered but only one selected for the prepared Order Form. A Best Value Determination Guideline Sheet shall be filled out for each vendor whose furniture has been specified and the sheet provided in the CID binder. (This is an addition to the requirements under 27.4 Format). The “Best Value” guide sheet will be provided during the preconstruction conference. All furniture/furnishings shall be selected form GSA Schedules or UNICOR. The GSA web site is: www.gsa.gov. The UNICOR web site is: www.unicor.gov. The UNICOR regional sales representative for the Savannah District is Joe McCormick @ 803-802-0189.

27.4 Format. The CID format shall be in accordance with the Savannah District Interior Design Presentation Format. See appendix “H” and Savannah District Design Manual.

27.5 CID Coordination and Installation. The Contractor shall develop and fully coordinate the CID package with the SID package. The CID submittals shall run concurrent with the SID submittals. The Contractor shall provide a CID cost estimate of furniture and furnishings and it shall include the cost of installation by the vendors. It is the contractor’s responsibility to ensure that the building design is fully coordinated to provide all features required by the furniture installers to effect a complete furniture installation to include coordination of all utility and communications connections.

27.6 Requirement Analysis. The Contractor shall interview the Government and determined the CID requirements. CID items and quantities shall be determined by but are not limited to: (1) the number of personnel to occupy the building, (2) job functions and related furniture/office equipment to support the job function (3) room functions (4) rank and grade. Appendix “B” provides room furniture guidance and occupancy levels but may not be all inclusive. After interviewing the building users, the Contractor must make any adjustments required on furnishing and furniture needs, and include those requirements in the Comprehensive Interior design package submitted for review.

27.7 CID Furnishing List. Typical CID items to specify for this building are:

Executive Wood Furniture
Support desks
Artwork
Bookcases
Bulletin Board, Porcelain Marker Boards
Chairs-all kinds, including stools

Desks-freestanding Technical support and Executive Level Quality
Desk-based systems furniture workstations-
Files-all kinds
Lamps-all kinds
Podium/lecture stands
Storage-all kinds
Silk Plants
Tables-all kinds
Waste cans-various sizes
All specific/special items as required by the government/user

27.8 The Contractor will ensure that the furniture from any sources to be used coordinates with any existing furniture to be re-used by the building occupants.

28 STRUCTURAL DESIGN REQUIREMENTS

28.1 General

The following criteria shall be used for loading, design and installation of all structural systems, including manufacturing, erection, supervision, testing and quality assurance. The completed structural design shall include all elements for foundations, walls, roof framing and diaphragms. It shall also include lateral load stability analyses as well as support for architectural features, mechanical and electrical equipment. All calculations shall be performed by a registered engineer, checked by an engineer other than the design engineer, and shall be in accordance with the guidance provided in the U.S. Army Corps of Engineers, Savannah District “Design Manual for Military Construction.” The primary code used for structural design shall be the International Building Code (IBC) 2000 and the codes referenced therein, except as modified by the DoD Unified Facilities Criteria UFC 1-200-01, dated 31 July 2002 and the following paragraphs.

28.2 Design Loads

Dead loads, live loads, and load combinations shall be in accordance with the requirements of the IBC 2000.

28.2.1 Wind Load shall be in accordance with IBC 2000.
Wind Velocity: 120 mph
Exposure: C
Category: I
Importance Factor: 1

28.2.2 Seismic Load shall be in accordance with IBC 2000 except as modified by UFC 1-200-01:

Spectral Response
Ss: 0.383 g
S1: 0.142 g
Seismic Use Group: I
Occupancy Importance Factor, I= 1
Site Class: D

28.2.3 Anti-terrorism/Force Protection

Anti-terrorism/force protection systems must be included for this project and shall conform to the “Department of Defense Antiterrorism Standards for Buildings, “dated 31 July 2002. Structures located within the minimum setback distance noted in Appendix B-1.1 of that document must be designed as hardened

structures. All other structures must meet the requirements of Appendix B-2. Additional guidance may be found in "Department of Defense Interim Antiterrorism/Force Protection Construction Standards - Progressive Collapse Design Guidance", dated 4 April 2000. Manuals are available from U.S. Army Engineer District, Omaha, ATTN: CENWO-ED-ST, 12565 West Center Road, Omaha, NE 68144-3869.

28.2.4 Special Loads.

Cargo and Medium Packs Storage Area floor slab shall be designed to support forklift #1 and storage racks with the capacity to store 30 cargo packs at 250 lbs each and 30 medium packs at 130 lbs each.

Personnel Parachute and Small Cargo Parachute Storage Area floor slab shall be designed to support storage racks with the capacity to store 60 small packs at 25 lbs each, 20 small packs at 10 lbs and 80 personnel packs at 25 lbs each.

Personnel Parachute and Small Cargo Parachute Storage Area shall be designed to support a hanger system for 80 harnesses (12'x12"x12")

Parachute Maintenance Shop, Parachute Pack Lines, Cargo Parachute Inspection and Packing, Pallet Storage Area / Loading Area, and Component Storage Areas floor slabs shall be design to support forklift #1.

Pallet Storage Area / Loading Area roof shall be designed to support a 5-ton monorail with a 20' hook height.

Sound Proof Movable Partition between Classrooms 1 & 2

Ceiling mounted projectors at 200 lbs in each classroom, ISMT Room,

Armory Vault: designed as per MIL-HDBK-1013/1A for Class A vaults

Vehicle Maintenance Facility Bays 1 & 2 floor slabs shall be designed to support the following: forklift #2, a tram, a EBFL, a 5 ton truck, a 7 ½ ton crane, a 7 ton truck and a Hum-V.

Vehicle Maintenance Facility Parts, Motor Transport, Publications, Heavy Equipent,and Battery Room's ceilings shall be concrete designed to support a 250 psf live load.

Parachute Drying Tower framing shall be design to support a parachute drying system and a catwalk.

Forklift and Vehicle model numbers and weights:

Type of Vehicle	Vehical Model Number	Weight of Vehicle
Tram	Coordinate with user	33,426 lbs
EBFL	Coordinate with user	25,600 lbs
5 Ton Truck	M813A1	21,461 lbs
7 Ton Truck	MTRV	Coordinate with user
Hum-Vee	M998	5,178 lbs
Forklift #1	Hyster 40 model 40XM	8,984 lbs with 4,000 lbs capicity
Forklift #2	Coordinate with user	Coordinate with user

7 ½ Ton Crane	Coordinate with user	26,000 lbs

NOTE: Forklifts and vehicles are subject to change based on the users requirements. The design/build team shall coordinate with the users prior to starting the final design.

28.2.5 Design drawings shall have General Structural Notes containing design loading criteria, strengths of engineering materials used, design soil values and any other data that would be pertinent to remodeling and/or future additions since design analyses and specifications often become separated from the contract drawings and lost after a project is completed.

28.2.6 Walls mostly below grade that are supported laterally by diaphragms at or near the top and bottom, shall be designed using loadings based on at rest soil pressures. All masonry walls below grade (below first floor finish floor) shall be solid grouted.

28.2.7 Diaphragms shall have continuous chord members on all edges and shall have a direct positive connection for transferring load to all members of the main lateral force resisting system.

28.2.8 Standing seam metal roofs (SSMR) shall be attached to 16 gage minimum thickness steel to allow sufficient screw thread engagement. This shall include the attachment of the clip as well as the subpurlin.

28.3 References

28.3.1 References:

a. *Minimum Design Loads for Buildings and Other Structures – ANSI/ASCE 7-98.*
b. MBMA-01 Low Rise Building Systems Manual (latest edition).
c. National Concrete Masonry Association (NCMA), Specifications for the Design and Construction of Load Bearing Concrete Masonry.
d. ACI-ASCE 530, Building Code Requirements for Concrete Masonry (1995)
e. American Institute Of Steel Construction (AISC), Manual of Steel Construction, 9th edition
f. Manual of Steel Construction, LRFD 3rd edition
g. Steel Deck Institute (SDI) Diaphragm Design Manual (latest edition)
h. American Welding Society, Welding Handbook
i. Steel Joist Institute (SJI) Standard Specifications, Load Tables and Weight Tables for Steel Joists and Joist Girders
j. Internation Building Code 2000
k. ACI 315-99, Details and Detailing of Concrete Reinforcement
l. ACI 318-99, Building Code Requirements for Structural Concrete
m. SDI Design Manual for Composite Decks, Form Decks, Roof Decks, and Cellular Decks

28.4 Design Criteria

International Building Code 2000
Unified Facilities Criteria UFC 1-200-01

Design Manual for Military Construction, Corps of Engineers, Savannah District

TI 809-04, Seismic Design Criteria for Buildings (As referenced by UFC 1-200-1)

TI 809-07, Design of Loadbearing Cold-Formed Steel Systems

TI 809-30, Metal Building Systems

TM 5-809-3, Masonry Structural Design for Buildings

TM 5-809-12, Concrete Floor Slabs on Grade Subjected to Heavy Loads

28.5 Foundations

Foundations shall be reinforced concrete continuous spread footings or isolated spread footings with the following minimum dimensions: isolated spread footings - 30 inches; load bearing continuous spread footings – 24 inches; non-load bearing continuous spread footings – 18 inches. Ground floor slab systems shall be slab-on-grade as recommended by geotechnical investigation. Bottom of load bearing foundations shall be located a minimum of two feet below finished floor or finished grade and non-load bearing shall be located a minimum of 18 inches below finished floor or finished grade.

28.6 Serviceability

28.6.1 Vertical deflection ratios of suspended horizontal framing members for dead plus live loads shall not be less than:

a. 240 at roofs
b. 600 at masonry lintels

28.6.2 Horizontal deflections caused by seismic or wind loads shall not exceed the limits set forth in the Savannah District “Design Manual for Military Construction”.

28.7 Concrete Design

28.7.1 Concrete shall have a minimum compressive strength of 3,000 psi at 28 days

28.7.2 Concrete Materials:

a. Cement: ASTM C 150, Type I-II Portland cement
b. Fly Ash: ASTM C 618, Class “F”
c. Ground Granulated Blast-Furnace Slag: ASTM C 989, Grade 120
d. Fine Aggregate: ASTM C 33
e. Coarse Aggregate: ASTM C 33
f. Air-Entraining Admixture: ASTM C 260
g. Accelerating, retarding and water-reducing admixtures: ASTM C 494
h. Flowing Concrete Admixture: ASTM C 1017, Type 1 or 2
i. Calcium Chloride shall not be permitted

28.7.3 Conduits, pipes, and sleeves embedded in concrete shall be placed in accordance ACI 318 section 6.3.

28.8 Slabs

28.8.1 Slabs-on-grade shall be a minimum thickness of 4 inches and reinforced with Welded Wire Fabric or Fiber Reinforcing. “Mud slabs” in crawl spaces do not have to be reinforced and shall be 2-inches thick.

28.8.2 Slabs shall be placed in lane fashion. Area of sections bounded by crack control joints shall not exceed 600 square feet, and distance between crack control joints shall not exceed 25 feet.

28.8.3 Vapor Barrier - Provide vapor barrier under all interior floor slabs. Polyethylene sheet not less than 6 mils thick. Provide four inch capillary water barrier under the vapor barrier when directed by soils report.

28.8.4 Crack control joints shall be as shown in the Savannah District “Design Manual for Military Construction”, Chapter A-2, Exhibit A-2-15. Reinforcement when required will be interrupted (2 inches clear each side) at sawed or pre-placed crack control joints. Bars shall be mid-depth, and starting 2 inches from edge of slab. The ends of crack control and corners of isolation joints will meet at a common point so far as practical. Floor slab isolation joint shall be 3/16-inch felt. Re-entrant corners shall be reinforced with a minimum of one #4 diagonal bar.

28.8.5 Horizontal runs of conduits and pipes shall not be embedded in slabs supported by ground. Vertical penetrations will conform to ACI 318. Aluminum conduit and pipes will not be embedded in any concrete.

28.8.6 Expansion Joints: Stop reinforcing at joint and provide smooth slip dowels across joint. Provide a bond breaker isolation joint where all concrete slabs abut a vertical surface (foundation walls).

28.8.7 Where thickened slabs are employed under column bases or partitions, crack control joints shall be offset from the thickened areas.

28.9 Masonry Design

28.9.1 Concrete Masonry units shall have a minimum compressive strength of 2,000 psi on gross area and 1,000 on net area at 28 days.

28.9.2 Concrete Masonry Materials:

a. Hollow Concrete Masonry Units:	ASTM C90, Grade N, Type I or II
b. Mortar for Masonry:	ASTM C 270, Type S
c. Grout for Masonry:	ASTM C 476
d. Horizontal Joint Reinforcement:	9-gage deformed wire, ladder-type

28.9.3 Provide solid brick where cores in cored brick might be exposed.

28.9.4 Joints shall be 3/8-inch, tooled concave.

28.9.5 Brick veneer ties shall be corrugated galvanized steel spaced 16-inches on center both vertically and horizontally.

28.9.6 Brickwork shall comply with latest edition of the Brick Institute of American Technical Notes No.28, Brick Veneer, New Construction.

28.10 Structural Steel Design

28.10.1 Detailing of structural steel framing, including connections, shall be complete. All weld types, bolting layouts, bolt sizes, connection plates and member sizes and locations and stiffener plate sizes and locations shall be shown.

28.10.2 All members, elements and connections that are a part of the main vertical and/or lateral force resisting system must be completely detailed.

28.10.3 All connections other than standard AISC pre-designed shear connections shall be designed by the engineer of record and detailed on the drawings.

28.10.4 If braced frames are used for all or part of the main lateral force resisting system, the stability of structural system shall not depend on any single member or connection. Redundancy shall be provided either by using multiple bays of tension only x-bracing or by using bracing members that are capable of both tension and compression if bracing is placed in a single bay.

28.11 Steel Joist Design

28.11.1 Joists shall be anchored to steel supports by field welding. Provide erection bolts as recommended by SJI. Provide embedded steel bearing plates in concrete and masonry work. Where top chords are extended provide required section modulus of extensions on the drawings.

28.11.2 Provide special joist seats for sloped roof as required. Modifications or adjustments to joist seats made to accommodate supplier’s fabrication process shall be coordinated with affected trades.

28.11.3 Provide bridging and cross bridging at bottom chords of joist per SJI recommendations.

28.11.4 Design joists for additional gravity loads and uplift loads as required by analysis.

28.11.5 Provide additional web members at concentrated loads indicated, which do not occur at a panel point. Joists shall not support vertical loads greater than 50 pounds on the bottom chord between panel points without reinforcing. Do not support loads from bridging.

28.12 Steel Decking Design

28.12.1 Form deck shall be galvanized. Metal form material shall be minimum 28 gage.

28.12.2 Steel roof deck material shall be galvanized and be 22 gage minimum. A structural steel roof deck shall be provided under all nonstructural metal roofs. If SSMR will be attached directly to steel roof deck then minimum thickness shall be 16 gage.

28.12.3 Galvanized steel roof deck in areas without ceilings which are exposed to view and are scheduled to be finish painted should be specified to receive a factory primer coat on the underneath side of deck.

28.13 Cold Formed Steel Design

28.13.1 Cold Formed Steel Materials:

a. Galvanized Structural Framing Members 16 gage and heavier
ASTM A 653, Grade D, 50 ksi
b. Galvanized Structural Framing Members 18 gage and lighter
ASTM A 653, Grade B, 36 ksi

28.13.2 Trusses fabricated from cold-formed steel members shall be designed and the drawings stamped by a registered engineer.

28.13.3 Cold-formed steel members, their components, and connection material shall have G60 galvanized coating.

28.13.4 Top chords of cold-formed roof members shall be 16 gage, minimum, where standing seam roof clips are connected with screws.

28.14 Wood

28.14.1 Retardant Treatment, when required. Recommendations regarding the use of fire retardant treatment are provided in USDA Wood Handbook and National Protection Handbook. Pressure impregnation is the preferred treatment method.

28.14.2 Termite control measures will be used in areas prone to termite infestation. Soil will be treated with commonly accepted termite control products prior to construction.

28.14.3 Use of oriented strand board (OSB) for floor sheathing is not permitted. Only APA structural rated plywood shall be used for floors.

28.15 Other Materials

28.15.1 There are no restrictions on proposing other materials to be used in the structural systems of this project if their strengths and durability can be substantiated by ASTM or other approved laboratory tests, and they satisfy the requirements of the design codes and criteria specified in this document.

28.15.2 All design, manufacture, fabrication, and assembly of other construction materials to be used in structural framing systems shall conform to the applicable design standards and meet specific industry standards as required for each subject material.

28.16 Parachute Drying Tower

28.16.1 The Parachute Drying Tower shall be designed to support a parachute drying system and a catwalk which will be used to perform routine maintance on the drying system. An access ladder with a safety cage shall also be provided.

28.16.2 The parachute drying system shall consist of four serperate drying areas with a capacity to dry 10 parachutes each for a total capacity of 40 parachute. Each drying area shall consist of independently operating hoists supporting a spearder bar or beam with 10 hooks each with a capacity to support 100 lbs. The hooks shall be able to be raised and lowered from the finshed floor to a minimum height of 60 feet.

28.16.3 The catwalk shall be designed to support a minimum live load of 40 psf and the catwalk grating shall be designed to support a concentrated point load of 300 lbs over a 4 square inch area.

28.16.4 The access ladder shall be designed and constructed in accordance with OSHA standards section 1910.27 and shall be constructed of galvanized steel or aluminum.

29. PLUMBING AND MECHANICAL REQUIREMENTS

29.1 Plumbing system shall be designed and installed in accordance with the International Plumbing Code (IPC). Inspection and testing of the plumbing system shall be performed as prescribed in the IPC. The plumbing system shall conform with the applicable rules of the Standard Building Code, governing venting of plumbing fixtures, sizing of waste, vents, drains, and water systems. Fixture count shall be as shown on the conceptual floor plan and as

required by the section entitled "Minimum number of required Fixtures" of the IPC. All piping shall be labeled, color coded, titled, and indicate direction of flow. All shutoff/isolation valves and water hammer arrestors shall be accessible. If installed above hard ceilings, access doors shall be provided. Corps of Engineer Guide Specification 15400, Plumbing, General Purpose shall be the basis for the plumbing system specifications.

29.2 Domestic Hot Water Temperatures

Hot water delivered to plumbing fixtures shall not exceed 120°F. Hot water will be stored at 140°F.

29.3 Plumbing Materials, Equipment and Fixture Requirements

29.3.1 Material for Domestic Water Lines

Water piping under concrete slab floors shall be copper tubing, type K, annealed and shall be completely wrapped in polyethylene. Joints under the slabs are not permitted. Amount of supply piping located under concrete slabs shall be held to a minimum. Materials for various services shall be in accordance with Table II – Pipe and Fitting Materials for Pressure Piping Systems of UFGS 15400A, Plumbing General Purpose. Pipe schedules shall be selected based on service requirement. Material or equipment containing lead shall not be used in any potable water system. See Table II of UFGS 15400A, Plumbing General Purpose, for a complete list of domestic water piping materials.

29.3.1.1 Routing and Design

All piping shall be concealed, properly supported with allowances for expansion and contraction. Interior water distribution piping shall not be buried under concrete floors. All piping systems shall be drainable. Interior hot and cold water piping systems shall be insulated. Water piping systems (including sprinkler piping) shall not be routed or located where subjected to freezing and shall be located within the insulated building envelope. Heat tracing (to prevent freezing) of interior piping systems will not be allowed. Individual shutoff or stop valves shall be provided on water supply lines to all plumbing fixtures. Individual stops shall also be furnished at all equipment connections such as dishwashers, vending machines, icemakers, etc. Shower control valves shall be provided with integral stops (shut-offs). Isolation shutoff valves shall be provided for each toilet room group to allow isolation shutoff for maintenance purposes while continuing service to the remainder of the building. Consolidate fixture vents through one common vent whenever possible. All vent penetrations through the roof shall be made through a roof jack designed for use with the roofing system furnished and color-matched to the roof. Aboveground piping shall run parallel with the lines of the building and in accordance with UFGS Section 15400A PLUMBING, GENERAL PURPOSE, unless otherwise indicated.

29.3.2 Material for Waste Lines

Materials for various services shall be in accordance with Table I – Pipe and Fitting Materials for Drainage, Waste, and Vent Piping System of UFGS Section 15400A PLUMBING, GENERAL PURPOSE. Pipe schedules shall be selected based on service requirement. Pipe fitting shall be compatible with applicable pipe. Plastic piping systems shall not be install in air plenums. Soil, waste, drain and vent piping installed in spaces used as HVAC air plenums shall be cast iron. Each fixture and piece of equipment requiring connections to the drainage system shall be equipped with a trap, and all fixtures shall be vented. Surface or wall cleanouts shall be provided for each drainage main.

Cleanouts shall be provided at each change in direction of sanitary sewer lines, at the intervals specified in the International Plumbing Code, and at the building service entrance. All cleanouts shall be permanently accessible. Ground cleanouts shall be installed in a 12-inch by 12-inch, 4-inch thick concrete pad, flush with grade. Pipes passing through the slab shall pass through a pipe sleeve and be installed in accordance with UFGS Section 15400A PLUMBING, GENERAL PURPOSE. All waste containing oil shall be piped separately through and oil/water separator before entering the sewer system. Consolidate fixture vents through one common vent whenever possible.

29.3.3 Plumbing Fixtures

Fixtures shall be provided complete with fittings, and trim. All shutoff valves shall be metal construction. Plastic valves are not acceptable. All fixtures, fittings, and trim in a project shall be from the same manufacturer and shall have the same finish.

29.3.3.1 Plumbing shall meet the following criteria:

a. In general, all faucets shall have solid brass bodies, ceramic valving, and chrome plated or trim. Water flow shall be no more than 2.5 gpm from any faucet.

b. Fixtures shall be water conservation type in accordance with the Standard Plumbing Code.

c. All vitreous china plumbing fixtures shall conform to ANSI A112.19.2M, Vitreous China Plumbing Fixtures. Stainless steel fixtures shall be in accordance with ANSI A112.19.3M, Stainless Steel Plumbing Fixtures (residential design).

d. Floor drains shall be provided in all wet areas, including but not limited to showers, locker rooms, toilet rooms, janitor’s closets, mechanical rooms and for equipment requiring drainage. Floor drains shall be cast iron body and bronze grate. Floor drains in mechanical rooms shall have cast iron grate. All floor drain traps shall be automatically primed by single trap primers or where appropriate, distribution unit type trap primers.

a. Fixture descriptions shall be as described by the American Society of Mechanical Engineers, ASME A112.19.

b. Infrared automatic type faucets and flush valves shall not be used.

29.3.3.2 Water Closets

Siphon-jet, elongated bowl, top supply spud, ASME A112.19.2M, wall mounted in gang toilet rooms, floor mounted in unisex bathrooms. Seat - ANSI Z124.5, Type A, white plastic, elongated, open front. Flushometer Valve - ASSE ANSI/ASSE 1037, large diaphragm type with non-hold-open feature, backcheck angle control stop, and vacuum breaker. Minimum upper chamber inside diameter of not less than 2½ inch at the point where the diaphragm is sealed between the upper and lower chambers. The maximum water use shall be 1.6 gallon per flush. Water closet trim shall conform to ANSI A112.19.5, Trim for Water-Closet Bowls, Tanks, and Urinals (Dimensional Standards). Any water closets designed as handicapped water closets shall meet the top rim of the bowl height requirements of CABO A117.1.

29.3.3.3 Urinals

Wall hanging, with integral trap and extended shields, ASME A112.19.2M, siphon jet. Top supply connection, back outlet. Flushometer Valve - ASSE ANSI/ASSE

1037, large diaphragm type with non-hold-open feature, backcheck angle control stop, and vacuum breaker. Minimum upper chamber inside diameter of not less than 2½ inch at the point where the diaphragm is sealed between the upper and lower chambers. The maximum water use shall be 1.0 gallon per flush. Urinal trim shall conform to ANSI A112.19.5, Trim for Water-Closet Bowls, Tanks, and Urinals (Dimensional Standards). Waterless urinals will not be allowed.

29.3.3.4 Lavatories

Manufacturer's standard sink depth, vitreous china ASME A112.19.2M, wall hung or lay-in countertop.

a. Faucet - Faucets shall be single lever, centerset, washerless type. Faucets shall have all brass and copper waterways and ceramic valving. The flow shall be limited to 2.5 gpm per second at a flowing pressure of 80 psi.

b. Drain - Strainer shall be copper alloy or stainless steel.

c. Handicap lavatories shall conform to ADA and Uniform Federal Accessibility Standards (Fed. Std. 795) for fixture height and safety insulation. Handicap lavatory faucets shall be ADA compliant.

29.3.3.5 Standard Shower

See architectural specification section for construction details.

a. Shower valve shall be single lever, pressure-balancing, thermostat mixing type, designed to maintain constant water temperature by automatically compensating for water pressure changes. Faucet shall be of solid brass construction with washerless ceramic valving. Adjustable pattern showerheads shall be provided and shall be chrome plated or polished nickel finish to match levers and escutcheons. Provide a flow control device with the shower head to limit the flow to a maximum of 2.5 gpm at a flowing pressure of 80 psi.

b. Drain - stainless steel.

29.3.4.6 Column Shower

Column showers shall have 6 foot column height measured from floor to shower head. Shower valves shall meet the requirements for the standard shower.

29.3.4.7 Break Room Sinks

Sinks shall be of size and configuration shown on the RFP floor plan or as found in the architectural specifications and shall be constructed of stainless steel. Faucets shall be same as the bath faucets in material, but designed for kitchen sink application.

29.3.4.8 Service Sinks

Service sinks shall be enameled cast iron ASME A112.19.1M, copper alloy or stainless steel ASME A112.19, corner, floor mounted 28 inches square, 6-3/4 inches deep. Faucet and Spout – Cast or wrought copper alloy, with top or bottom brace, with backflow preventer. Faucets shall have replaceable seat and the washer shall rotate onto the seat. Two lever handle type shall be provided. Strainers shall have internal threads. Drain Assembly – Plug, cup strainer, crossbars, jam nuts, washers, couplings, stopper, etc., shall be copper alloy or stainless steel. Trap shall be cast iron, minimum 3 inch diameter.

Sink in the Medical Exam Room shall be a wall mounted stainless steel handwash sink with stainless steel backsplash and support brackets. Sink shall be

fitted a rigid gooseneck spout with laminar flow outlet and wall mounted hot and cold foot controls.

29.3.4.9 Water Cooler Drinking Fountains

Water cooler drinking fountains shall be located in close proximity to each restroom and break room. Corridors which are distant from these rooms shall contain at least one water cooler drinking fountain as well. Water cooler drinking fountains shall: be self contained, conform to ARI 1010, use one of the fluorocarbon gases conforming to ARI 700 and ASHRAE 34 which has an Ozone Depletion Potential of less than or equal to 0.05, have a capacity to deliver 7.6 gph of water at 50° F with an inlet water temperature of 80° F while residing in a room environment of 90° F and have self-closing valves. Self-closing valves shall have automatic stream regulators, have a flow control capability, have a push button actuation or have a cross-shaped index metal turn handle without a hood. Exposed surfaces of stainless steel shall have No. 4 general polish finish. Spouts shall provide a flow of water at least 4 inch high so as to allow the insertion of a cup or glass under the flow of water. Handicap lavatories shall conform to ADA and Uniform Federal Accessibility Standards (Fed. Std. 795) for fixture height and function.

29.3.4.10 Wall Hydrants (Exterior)

Wall hydrants shall be provided at a maximum spacing interval of 200 feet around the exterior wall of the building. Each hydrant shall be box type, freeze proof, with an integral vacuum breaker/backflow preventer. Hydrants shall have 3/4 inch hose connections.

29.3.4.11 Emergency Shower/Eyewash Stations

Emergency shower/eyewash shall be a floor mounted unit consisting of chrome plated brass sprayhead assembly with twin eye/face wash heads with pop-off covers, chrome plated brass 1/2" stay open ball valve manually operated by stainless steel push flag handle, integral stream control, dome strainer and drain fitting, heavy-gauge wall bracket, stainless steel bowl, and wall mounted identification sign. Shower shall be actuated by stay open ball valve with pull chain activation. Eyewash shall be fitted with a tailpiece and p-trap with extension to wall. Floor drain will be provided at every emergency eyewash station. Eyewash stations shall be provided with tepid potable water in accordance with ANSI Z358.1-1998. Emergency shower/eyewash stations shall be spaced apart in accordance with ANSI Z358.1-1998.

29.3.5 Wash Tubs

Wash tubs shall be constructed out of 18 gauge stainless steel, 4’ x 4’ x 3’ deep. Tubs shall be free standing with stainless steel legs. Faucet and Spout – Cast or wrought copper alloy, with top or bottom brace, with backflow preventer. Faucets shall have replaceable seat and the washer shall rotate onto the seat. Two lever handle type shall be provided. Strainers shall have internal threads. Drain Assembly – Plug, cup strainer, crossbars, jam nuts, washers, couplings, stopper, etc., shall be copper alloy or stainless steel. Trap shall be cast iron, minimum 3 inch diameter. Wash tubs shall be provided with hot and cold water. Provide floor drains in the areas around the wash tubs.

29.3.6 Major Appliance Plumbing Connections

The Contractor shall provide appropriate connections for all appliances, vending machines, and any other items requiring water and/or drain connections.

29.3.7 Domestic Water Heater

Domestic hot water heater shall be electric type, with a heating capacity and auxiliary storage adequate for the building occupancy. Hot water system shall be designed to serve the demand for 50 persons showering in succession utilizing the showers as shown on the RFP plans. A pressure/temperature relief valve, vacuum breaker on the water supply line, drain and a 6-inch concrete pad shall be provided for the water heater and/or storage tank. Domestic hot water heater shall be equipped with a recirculation pump and recirculation piping and balancing valves.

29.3.8 Testing

Test soil, waste and vent piping by capping or plugging and filling the system with water, allowing it to stand filled for 1 hour. If tested in sections, each section shall be subjected to not less than a 10 foot head. Test cold water, hot water, and hot water circulating by applying a hydrostatic pressure of 125 psig for 1 hour. Test piping under floor slabs in floor fill before slabs are poured. Soldered piping which is not tight under tests shall be taken down and reassembled. Joints in cast iron hub and spigot pipe not tight under test shall be replaced. Joints in cast iron no-hub pipe not tight under test shall be taken down and reassembled using new couplings. Test each fixture for soundness, stability of support and operation. Submit a statement certifying that piping has passed the herein specified tests. Tests shall be made while pipe is exposed to view.

29.4 Piping Materials

UFGS Section 15400A Table I and II shall be the basis for plumbing systems and materials.

29.5 Miscellaneous Items

29.5.1 Central Dispensing System

A central dispensing system shall be provided in each Tactical Vehicle Maintenance Building service bay for grease, and three different grades of oil. Integral spill containment system and hose reels for each lubricant shall be provided with the system. The central dispensing system will be a bid option.

29.5.2 Backflow Preventer

All building water service mains shall be provided with a reduced pressure zone backflow prevention protection device.

29.5.3 Compressed Air System

Compressed air outlets with quick disconnect couplings shall be provided in the VMF service bays. The compressor will be sized to handle 60 percent of the outlets operating at one time(in accordance with the AEI Design Criteria). The compressor will be furnished with a filter and air dryer, and will supply a pressure of 100 psig. Air outlets will be located adjacent to the roll-up doors for each bay and spaced along each side wall. Two outlets shall be provided on the exterior wall of the VMF service bays. Two hose reels with quick connects with 100 feet of hose shall be provided. Locate the air compressor inside of the maintenance bay along the exterior wall. Coordinate location with the Contracting Officer.

29.5.4 Hose Bibbs

Hose bibbs shall be provided around the exterior of the repair bays, one per bay. Hose bibbs shall also be provided in all gang toilet areas.

29.5.5 Expansion Tank

An expansion tank shall be installed in the domestic hot water system.

29.5.6 Water Hammer Arresters

Water hammer arresters shall be provided for all plumbing fixtures for shock suppression. The placement of water hammer arresters shall be in accordance with the International Plumbing Code and PDI-WH 201.

30 FIRE PROTECTION

30.1 Qualifications of Fire Protection Engineer

Qualifications of Fire Protection Engineer: The design of the fire protection features shall be by a qualified fire protection engineer meeting one of the following conditions: a.) An engineer with a Bachelor of Science or Masters of Science Degree in fire protection engineering from an accredited university engineering program, plus a minimum of 5 years' work experience in fire protection engineering. b.) A registered professional engineer who has passed the National Council of Examiners for Engineering and Surveys (NCEE) fire protection engineering written examination. c.) A registered P.E. in a related engineering discipline with a minimum of 5 years' experience dedicated to fire protection engineering. The name and credentials (education, registration, experience) of the fire protection engineer shall be submitted with the initial contract documents and approved by the District fire protection engineer prior to proceeding with fire protection design.

30.2 Fire Suppression System

Automatic wet pipe sprinkler protection shall be provided for all areas of the building except as noted below. The requirements indicated below shall be incorporated into the design.

30.3 Sprinkler System

The facilities shall be fully protected with automatic wet pipe sprinkler systems. All floors and all areas of the facilities shall be protected, including the cable vault and the loading dock. The sprinkler system designs shall be in accordance with MIL-HDBK-1008C, NFPA 13, NFPA 75, NFPA 230, and UFGS Specification Section 13930, Wet Pipe Sprinkler System. The sprinkler hazard classifications shall be in accordance with MIL-HDBK-1008C, NFPA 13, and NFPA 230. Design densities, design areas and exterior hose streams shall be in accordance with MIL-HDBK-1008C. The sprinkler systems shall be designed and all piping sized with computer generated hydraulic calculations. The exterior hose stream demand shall be included in the hydraulic calculations. A complete sprinkler system design, including sprinklers, branch lines, floor mains and risers, shall be shown on the drawings.

The sprinkler service main shall be provided with an exterior post indicator valve with tamper switch reporting to the fire alarm control panel (FACP). The sprinkler entry riser shall include a double check backflow preventer, a fire department connection, and a wall hydrant for testing of backflow preventer. The sprinkler system shall include an indicating control valve, an alarm check valve and a flow switch reporting to the FACP. All control valves shall be OS&Y type and shall be provided with tamper switches connected to the FACP.

The Contractor shall edit UFGS Specification Section 13930, Wet Pipe Sprinkler System, for this project. This shall be submitted for review with the preliminary and final design submittals. These specifications shall be followed for the design and installation of the sprinkler systems.

The Contractor shall submit material data, hydraulic calculations, and shop drawings as required by Specification Section 13930 to the Contracting Officer for review and approval.

30.4 Exterior Hose Stream

Exterior hose stream demand shall be in accordance with MIL-HDBK-1008C. This shall be 250 gpm for light hazard and 500 gpm for ordinary hazard. Exterior hose stream demand shall be included in the sprinkler system hydraulic calculations.

30.5 Backflow Preventer

A double check backflow preventer shall be provided on the fire water main serving each building. This shall be located within the building. An exterior wall hydrant with OS&Y valve shall be provided to allow testing of backflow preventer at design flow as required by NFPA 13.

30.6 Fire Department Connection

A fire department connection shall be provided for each building with sprinkler protection. These shall be located to be directly accessible to the fire department, either on the front side or on the main street side of the building. If the fire department connection is located in a fenced area, a Knox box will be provided with keys to the fenced area to allow access to the fire department connection.

30.7 System Components and Hardware

Materials for the sprinkler system, fire pump system, and hose standpipe system shall be in accordance with Specification Sections 13930 and 13935 and with NFPA 13 and NFPA 230. Sprinkler system piping shall be black steel and shall be minimum Schedule 40 for sizes 2 inch and less and minimum Schedule 10 for sizes greater than 2 inch.

30.8 Protection of Piping Against Earthquake Damage

Sprinkler and fire pump piping systems shall be protected against damage from earthquakes. Seismic protection shall include flexible and rigid couplings, sway bracing, seismic separation assemblies where piping crosses building seismic separation joints, and other features as required by NFPA 13 for protection of piping against damage from earthquakes.

30.9 FM-200 Suppression System

The Comm. Battery Storage Room shall be protected by an FM-200 suppression system. No water based suppression systems may be used in this area. Contractor shall provide and install a complete FM-200 suppression system including storage tank, piping, valves, alarms, actuators and all other appurtenances necessary. System calculations, design and installation shall in accordance with NFPA 2000. Provide system calculations and complete detailed drawings at the 60% and 100% design submittals.

30.10 Preliminary (60%) Design Submittal Requirements For Successful Proposer

30.10.1 Design Analysis

The submittal shall be in accordance with the DMMC, Chapters A-4, 5, and 6 for preliminary (60%) design submittals. Project fire protection design analysis shall be complete and detailed as required for critical projects per the DMMC, Chapters A-4 and A-6. Design analysis shall include analysis for fire protection/life safety, fire suppression systems and alarm and detection systems.

30.10.2 Drawings

The submittal shall be in accordance with the DMMC, Chapters A-4, 5, and 6 for preliminary (60%) design submittals. Project fire protection design shall be complete and detailed as required for critical projects per the DMMC, Chapters A-4 and A-6. Drawings shall include fire protection/life safety plans, fire suppression system plans and alarm and detection system plans.

30.10.3 Specifications

The submittal shall be in accordance with the DMMC, Chapters A-4, 5, and 6 for preliminary (60%) design submittals. Specifications submitted shall be “marked-up” versions such that reviewer can visually see the revisions. The proposer’s optional items shall be limited to bracketed items only.

30.11 Final (100%) Design Submittal Requirements for Successful Proposer

30.11.1 Design Analysis

The submittal shall be in accordance with the DMMC, Chapters A-4, 5, and 6 for final (100%) design submittals. Project fire protection design analysis shall be complete and detailed as required for critical projects per the DMMC, Chapters A-4 and A-6. Design analysis shall include analysis for fire protection/life safety, fire suppression systems and alarm and detection systems.

30.11.2 Drawings

The submittal shall be in accordance with the DMMC, Chapters A-4, 5, and 6 for final (100%) design submittals. Project fire protection design shall be complete and detailed as required for critical projects per the DMMC, Chapters A-4 and A-6. Drawings shall include fire protection/life safety plans, fire suppression system plans and alarm and detection system plans.

30.11.3 Specifications

The submittal shall be in accordance with the DMMC, Chapters A-4, 5, and 6 for final (100%) design submittals.

30.12 Fire Water Supply

Refer to Civil Design for design requirements.

30.13 Fire Detection and Alarm

Refer to Electrical Design for design requirements.

30.14 Fire Extinguishers

Refer to Architectural Design for design requirements.

30.15 Fire Hydrants

Refer to Civil Design for design requirements.

31. HEATING, VENTILATING, AND AIR CONDITIONING REQUIREMENTS

31.1 General

The heating, ventilation, and air conditioning equipment shall be as described herein.

31.2 Mechanical Design References

The mechanical systems will be designed in accordance with the Request for Proposal issued by the Savannah Corps of Engineers, ASHRAE standards, Uniform Mechanical code, NFPA Standards and the International Standard Plumbing Code.

The mechanical system shall use the following design criteria and standards:

- Savannah District Engineering Design Manual for Military Construction, dated February 2002, Revised August 2002.
- Savannah District Drafting Standards.
- ASHRAE Manuals, latest edition.
- NFPA 90A, Installation of Air Conditioning and Ventilating Systems.
- NFPA 90B, Installation of Warm Air Heating and Air Heating and Air Conditioning Systems.
- ASHRAE Standard 62-1999, Ventilation for Acceptable Indoor Air Quality.
- Technical Instructions, Design Criteria, T1-800-01, 20 July, 1998.
- TM 5-785 Engineering Weather Data.
- TM 5-805-4 Noise and vibration Control for Mechanical Equipment.
- TI 809-4 Seismic Design for Building.
- TI 810-10, 1 FEB 99, Mechanical Design, Heating, Ventilating, and Air Conditioning
- Hunter Army Airfield Installation Design Guide

31.3 Heating, Ventilation, and Air Conditioning (HVAC)

31.3.1 Air System Design and Zoning

Air handling systems shall be zoned by functional requirements, operation schedules, temperature and humidity requirements and load characteristics. Some areas will not be occupied on a full time basis. Refer to Appendix B, Functional Room Requirements, for information to be used in determining system zoning. Areas that are part time occupancy shall have control or zoning flexibility to be scheduled for operation independent of full time HVAC areas.

31.3.2 Cooling Systems Design

Chilled water for comfort cooling shall be provided by the use of an air cooled chiller.

31.3.3 Heating System Design

The heating for the facility shall be provided by an electric hot water boiler.

31.3.4 Ventilation Systems Design

Ventilation for building occupants shall be provided in accordance with ASHRAE Standard 62-2001. Ventilation air shall be injected into the building at each air handling unit upstream of the coils. Variable volume units shall maintain a constant minimum outside airflow by electronic airflow measurement station as required. The outside air intake shall be located away from fumes including vehicle exhaust, toilet exhaust, etc. Exhaust systems shall exhaust all toilet rooms, bathrooms, janitor's closets, lockers, battery storage rooms, warehouse storage areas, and other spaces as required.

31.3.5 Special Mechanical Systems

Special systems will include drying systems for the Parachute Drying Tower.

31.3.6 Electrical Work

Polyphase squirrel cage induction motors for equipment 1 Hp (0.75 kW) and larger rated 600 volts or less shall be premium efficiency (Design E) rated per NEMA MG1-1993, rev.1. Motors for equipment below 1 Hp (0.75 kW) shall also be premium efficiency.

31.3.7 Metering: Gas, Electricity, and Potable Water

Potable water, electric, and gas meters shall all have pulse outputs, data collection/communication capability and shall be compatible with Hunter Army Airfield Standards. Electric meter is specified in Section 29, Electrical Design. All meters shall be monitored by the building’s Direct Digital Control (DDC) system.

31.3.8 Electrical Rooms, Mechanical Rooms, and Communications Rooms

Mechanical Rooms shall be heated and ventilated at a rate of 10 and 20 air changes per hour. A two-speed fan shall be provided to accomplish the 10 ac/hr and 20 ac/hr rates. The space shall be maintained at 45°F in winter and maximum of 10°F above outside design ambient in summer. Ventilation shall be positively introduced within the mechanical room containing the boiler.

Electrical rooms which contain heat producing equipment such as transformers shall be ventilated to maintain temperature at no more than 10°F above outside design ambient in summer. Electrical rooms shall be heated to 45°F in winter.

Communications rooms housing local area network equipment shall be provided with dedicated self contained HVAC systems. Rooms shall be maintained between 64°F and 75°F at all times. Relative humidity shall be maintained between 30% and 55%RH. Coordinate with the user for heat producing equipment to be located in these rooms.

31.3.9 Administration and Training Area

This area includes administrative offices, classrooms, conference rooms, Medical Exam area, Recruiting, communication equipment rooms, IMST Trainer and various other administration type spaces that will all require air conditioning.

The NMCI Secure room and NMCI Unsecure room are communications rooms. These rooms will house computer server type equipment and communications equipment. These rooms will require individual temperature control. Refer to Paragraph 31.3.8 for specific requirements for communications rooms.

The IMST Trainer room will house battle simulation equipment and will have unique cooling requirements. This room will house up to 15 marines performing battle simulation activities. The cooling for this room should be independent of other surrounding spaces and should be sized for 15 marines at high activity level and 1000 watts of equipment, in addition to normal sources of room heat gain. The cooling for this space should be sized for 72ºF space temperature during training activities.

The Communications Maintenance and Communications Battery Storage Rooms shall be zoned together, separate from surrounding areas. These rooms will be used for maintenance and storage of mobile communications equipment. The Communications Battery Storage Room will be equipped with an FM-200 type fire suppression system. The HVAC systems for the Communications Battery Storage Room will need to be coordinated with the fire suppression system. The HVAC systems serving this room will require automatic shutoff devices interlocked with the actuation systems for the fire suppression system. This is normally accomplished with motorized dampers in the ducts serving the space.

Other administration and training spaces shall be logically zoned according to function, schedule, exposure and temperature requirements.

31.3.10 Toilet/Locker Room Area

This area will be heavily used during Reserve training activities and will experience light use at other times. Ventilation and air conditioning for this area shall be designed and sized to control moisture and temperature during heavy use and light use. Locker rooms shall be air conditioned to control moisture. Toilet rooms and showers shall be ventilated in accordance with ASHRAE 62-1999. Toilet rooms and shower areas shall draw conditioned air from adjacent locker room spaces for exhaust air make up.

31.3.11 Vehicle Maintenance Area

The Vehicle Maintenance Area consists of areas that are heated and ventilated only and areas that are air conditioned. The Motor T Office, Heavy Equipment Office, Publications Storage Room and Head shall receive heating and air conditioning. All other areas shall be heated to 65ºF and ventilated. Summer ventilation shall be provided by wall mounted propeller fans and shall not be less that 20 air changes per hour. Winter ventilation shall be in accordance with ASHRAE 62-2001.

Battery Storage Room, Tool Room and Parts, shall be ventilated in accordance with TI 810-10. Make up air for the exhaust system may be drawn from the adjacent VMF Bays.

31.3.12 Drill Hall

The Drill Hall shall be air conditioned and heated by a system dedicated to the Drill Hall and associated spaces. The Drill Hall air conditioning system shall be designed to accommodate up to 200 Reservists performing briefing and staging activities in the Drill Hall. This space will have a normal occupancy of 15 people and peak occupancy of 200 people during reserve weekends. Provide measures to reduce the ventilation rate of this space during times of low occupancy.

The Armory shall be air conditioned and heated to maintain temperature no higher than 80°F nor lower that 60°F by a dedicated system. The system serving the Armory shall not serve other areas and air from the Armory shall not be circulated to other areas of the building.

The NBC Office and Supply Office shall be air conditioned.

The Supply Warehouse shall be heated and ventilated. Ventilation shall be provided in the summer at 10 air changes per hour and shall be controlled by a thermostat. Heating shall be provided by hot water type unit heaters to control space temperature to 65°F, minimum.

31.3.13 Paraloft

The Paraloft area consists of areas for parachute maintenance, packing, rigging and storage. The Cargo Pack Storage, Main and Small Pack Storage Rooms and Parachute Maintenance Room will require air conditioning and humidity control. These rooms shall be maintained at conditions of 78°F maximum and 68°F minimum with relative humidity between 30% minimum and 60% maximum. The Paraloft Office will also require air conditioning and may be zoned with these spaces.

The Parachute Packing and Inspection Room will require heating to 65ºF and ventilation. Heating shall be provided by hot water type unit heaters. Ventilation shall be provided by wall mounted propeller fans and intake louvers with motorized dampers and shall not be less that 20 air changes per hour.

The Parachute Drying tower shall be provided with heating and ventilation systems designed to provide drying of parachutes hanging in the tower. Air shall be exhausted through wall louvers near the top of the tower by propeller type exhaust fans. Air shall be drawn into the tower near the bottom of the tower through wall louvers with motorized dampers. Hot water heating coils shall be mounted on the inside face of the louvers to provide heating of the make up air. Make up air temperature shall be controlled by an averaging thermostat mounting on the leaving face of the coils. Coils shall be protected by an expanded galvanized steel or aluminum guard screen.

31.4 System Maintainability

Ensure that filters, controls, control valves, and coils are easily accessible for servicing and cleaning. Isolation valves shall be provided for each terminal unit, zone, branch, long runs, etc. as necessary for proper isolation and maintenance. Coils shall be fully removable without requiring demolition of any building components. Piping configuration at all coils shall include unions to facilitate easy coil removal.

31.5 Commissioning

The mechanical system commissioning shall be in accordance with specification Section 15995 COMMISSIONING OF HVAC SYSTEM. Commissioning requirements shall be clearly detailed on the design drawings and shall be clearly stated in the construction specifications to ensure the HVAC systems are properly installed, balanced and calibrated prior to building occupancy. Commissioning procedures shall be in accordance with ASHRAE Standards.

31.6 Direct Digital Controls

31.6.1 General

Direct Digital Controls (DDC) shall be used to control HVAC systems and equipment. Digital control system shall be interfaced to a personal computer, which shall be provided and installed by the DDC system vendor. Digital control system shall be by Williams Electric.

Stand alone equipment, such as chillers supplied with packaged controls, shall be installed with all necessary additional communications support equipment for interface to the DDC system

31.7 Acoustical Criteria

Systems shall be designed to meet the following noise criteria:

Area	NC Level
General open offices	35
Conference rooms	30
Other occupied spaces	35

Acoustical treatments such as duct lining and sound attenuators shall be used to achieve these levels.

Vibration transmission from equipment shall be minimized with the use of vibration isolation equipment as required.

31.8 Controls Systems

The automatic temperature controls shall be designed in accordance with UFGS Section 15951 Direct Digital Control for HVAC and TI-810-11. All control devices shall be labeled with laminated plastic tags using unique identifiers, which are cross referenced to the control drawings.

31.9 Energy Conservation

Public Law 100-615 and Federal Regulations 10 CFR 435 Subpart B, require Federal buildings to be designed and constructed to reduce energy consumption in a life-cycle, cost-effective manner using renewable energy sources when economical. Each system, component or feature selected that impacts the energy or water use of the facility shall be in compliance with ASHRAE Standard 90.1. ASHRAE Standard 90.1 is essentially the same as 10 CFR 435, and like 10 CFR 435 presents several conformance paths. The path selected to show compliance with ASHRAE Standard 90.1 shall be clearly identified. In addition, energy efficiency ratings for equipment shall be in the upper 25 percent of that available as long as these efficiencies are life cycle cost effective. The Department of Energy (DOE) and Federal Energy Management Program recommendations from the Buying Energy Efficient Products Guide and the Environmental Protection Agency Star products program meet these requirements. The DOE recommendations are available at www.eren.doe.gov/femp/procurement. Submittals from the successful bidder shall be in compliance with above and address energy conservation features such as economizer cycles, water side economizer, variable frequency drives, heat recovery, etc.

31.10 HVAC Calculations

DESIGN CRITERIA: Heat gain and loss calculations shall be, as a minimum, in accordance with the current edition of the American Society of Heating, Refrigeration, and Air Conditioning Engineers (ASHRAE) Handbook of Fundamentals. Computer generated loads must be submitted with complete input and output summaries during the design process. Load calculation software must be ASHRAE based. The cooling equipment shall be selected based on satisfying both the total and latent calculated loads. System shall be designed, installed, balanced, and adjusted to distribute heating and cooling to all habitable rooms, in proportion to the calculated heat losses/gains in these rooms. Heating shall also be provided to utility rooms, and other nonhabitable areas as needed to prevent pipes from freezing. Verify ventilation rates of each space with the referenced publications in this mechanical design section. Conduct air balance calculations for the space in the complex to verify total supply air, outdoor air, return air, and exhaust air. The space (airflow)

pressure relationships shall be maintained. Total airflow calculations are required to verify that the building pressure is positive to the outdoors on a total building basis. The design shall reflect heating and cooling capacities based on the following design conditions.

31.10.1 Cooling

The air conditioning inside design temperature shall be 15°F less than the 2-1/2 percent outside dry bulb weather condition, but should not exceed 78°F nor be less than 75°F dry bulb, except otherwise indicated or specified. The design relative humidity shall be 50 percent ±5%. The mechanical and electrical room ventilating systems shall have setpoints of 85°F in summer.

31.10.2 Comfort Heating

The heating inside design temperature for personnel comfort shall be 68°F for occupied areas and 45°F for the mechanical and electrical areas.

31.10.3 Weather Data

Hunter Army Airfield, Savannah, Georgia: Per TM5-585, Engineering Weather Data, July 1978.

31.10.4 Internal Loads

Each office and/or work station receives one personal computer for each occupant.

Lounge equipment includes soda vending machine, full size refrigerator, microwave oven and coffee maker.

Computers, instruments, communication equipment, and other items of equipment are located throughout the facility. Refer to the room by room descriptions in Appendix B for specific room requirements.

31.10.5 Energy Calculations

31.10.5.1 A minimum requirement of the sustainable project certification is to show compliance with ASHRAE 90.1-1999. This may be accomplished by providing a summary table of design features that minimally comply with applicable mandatory and prescriptive requirements in ASHRAE 90.1-1999, sections 5 through 10 or by providing a copy of the Energy Cost Budget Compliance Report. The compliance documentation shall include a narrative, supporting calculations and catalog cut sheets as well as the summary table and shall be submitted by the successful proposer after contract award. All proposers must submit in their proposals a statement that they will provide a facility that complies with ASHRAE 90.1-1999.

If the proposer elects to go for additional energy points then they must submit energy cost budget calculations. Energy cost budget submittal shall include complete input (custom members and schedules, room, systems, plants, room and system assignments) and output for the energy analysis program used. Current utility rates should be obtained from the base. The hours of operation should be based on how the building will actually operate. The operating schedule should be coordinated with end user of the facility. The successful proposer should also coordinate with the Savannah District Mechanical Section before doing the calculations to facilitate the review and submittal process.

31.11 Mechanical Equipment

Mechanical equipment shall be designed in accordance UFGS guide specifications listed in this section of mechanical design. The equipment described below is a minimum. All materials and equipment provided shall be standard catalogued products of manufacturers regularly engaged in the production of such materials and equipment shall be of the manufacturers' latest standard design. Equipment shall comply with the requirements of Underwriter's Laboratories, Inc. (UL), Air Conditioning Refrigeration Institute (ARI), American Society for Testing and Materials (ASTM), National Electric Manufacturer's Association (NEMA), American National Standards Institute (ANSI), National Fire Protection Association (NFPA), or other national trade associations as applicable.

The locations of all mechanical equipment shall be coordinated with all other disciplines.

All pieces of floor mounted mechanical equipment shall be installed on a 6-inch thick concrete equipment pad. Provide pad 6 inches larger than equipment footprint on all sides. Install dowell pins into floor slab prior to pouring equipment pad. All suspended equipment shall be properly supported according to the manufacturer's instructions. Provide trapeze hangers for larger pieces of equipment. Provide adequate clearance around all pieces of equipment for periodic maintenance, inspection and cleaning. Service of one piece shall not require disturbance of adjacent equipment.

Each piece of motorized equipment shall be provided with vibration isolators. Nominal deflection and natural frequency of isolation equipment shall be selected based upon equipment size and structural attachment details.

All strainers and air separators are to be equipped with blow-down valves and piped to a floor drain.

The mechanical room shall be separate from the electrical utility room and be accessible from an exterior door. The mechanical room shall house any central equipment for facility comfort conditioning.

Roof mounted equipment is not acceptable. All equipment shall be accessible from the first floor or mezzanine level.

Mechanical components shall be installed and mounted in accordance with TI-809-4 "Seismic Design for Buildings." The design for seismic protection shall be based on a seismic Use Group IIIE Building Occupancy - Critical Facility per TI-809-4.

31.12 Air Handling Units

Air handling units shall be factory packaged, section modular type design, constructed of 2-inch thick preinsulated double wall panels. A minimum 15-inch access section with door shall be provided upstream of each coil. Maximum coil face velocities shall be limited to 500 feet per minute for constant volume airflow system and 550 feet per minute for variable airflow system. Mixing boxes shall be factory or field fabricated and configured with dampers to promote mixing of return air and outdoor air streams. Angled filter section may be included as part of the mixing box. Cooling coil section shall be provided with a galvanized steel drain pan which will collect coil condensate from all coils. Equip drain pan opening with a liquid trap and cleanout plug.

Supply fan section shall be equipped with non-overloading centrifugal fan mounted on a steel base frame. Fan base shall be isolated from air handling unit base rails by the use of housed spring isolators. Fans shall be V-belt driven by belt drives sized for 150% of design power requirement. Provide adjustable sheaves for fans up to 20 Hp.

Variable volume air handling units shall be provided with inlet guide vanes or variable speed motor drives for volume control.

31.12.1 Filtration: For administrative facilities, and similar occupancies filter the combined supply air, including return and outside air, using a combination of 25 to 30 percent efficient prefilter(s) and 80 to 85 percent efficient final filter(s) as determined by the dust spot test specified in ASHRAE Standard 52. Where practical, provide separate filtration or other means to clean the outdoor air, typically equivalent to that used for the combined air stream, prior to mixing it with the return air. Due to the decrease in system airflow as the pressure drop across the filter increases, size fans for the “dirty” filter condition. This will ensure that each fan has adequate capacity to deliver the design airflow as the filter becomes loaded.

31.13 Air Distribution

Ductwork shall be constructed of sheet metal to SMACNA HVAC Duct Construction Standards, latest edition. Flexible ductwork runouts to terminal devices shall be limited to 5 feet in length. Each duct branch shall be fitted with a manual balancing damper. All ductwork shall be located above slab, supported from roof structures. Return air shall be ducted to unit from each space. Ceiling return air plenums shall not be used. Ducted returns shall maintain NC-25 requirements at rooms for general occupancy space.

Low pressure distribution ductwork shall be installed to SMACNA pressure class 2" wg (0.5 kPa), seal class C, and leakage class 24 as a minimum. Test ductwork in accordance with SMACNA 10. Access must be provided to all devices or areas that may require periodic inspection, including but not limited to balancing devices, motor operated dampers, flow measuring stations, smoke/fire dampers, etc.

Provide systems with filters, plenums, and all safety controls. Air supply outlets shall be front fixed directional fins with volume dampers operable from the face of the register. Duct manual volume dampers shall be installed on all duct takeoffs as far as possible from the register or diffuser. Registers or diffusers will not be used as dampers. It is preferable that supply outlets be located in ceilings.

31.14 Duct Insulation

All supply ductwork shall be insulated with 2-inch thick exterior insulation. Return and relief air ductwork shall be insulated with 1-1/2" thick exterior insulation. All exposed ductwork insulation shall be factory fabricated rigid insulation board. Concealed insulation may be duct-wrap or rigid. Insulation shall be faced with a vapor barrier material having a performance rating not to exceed 1.0 perm. Insulation, vapor barrier, and closure systems shall be noncombustible as defined in NFPA 255, with a flame-spread rating of not more than 25, and a smoke developed rating of not more than 50, as defined in ASTM E 84. Glass cloth and vapor barrier coating is required at all insulation terminations and penetrations for stick pins. Vapor barrier coating is required at all insulation seams and all insulation penetrations. Exposed heating only or exposed return air ductwork shall not be insulated.

Insulate back of all air devices on air handling unit systems.

31.15 Miscellaneous Fans

Exhaust fans shall be cabinet type, inline, or wall mounted. Roof mounted fans are not acceptable. Fans shall be V-belt driven by belt drives sized for 150% of design power requirement. Provide adjustable sheaves for fans up to 20 Hp. Small fans not available with V-belt drive may be directly driven. Motor

selection shall permit non-overloading operation at all conditions. All fans shall be provided with vibration isolators to decouple the motor assembly from the fan housing. Suspend fans with vibration isolators from building structure.

31.16 Heating Equipment

The hot water heating system shall include an electric hot water boiler and circulation pump. Manufacturer's standard packaged operation controls shall be provided to handle all aspects of capacity modulation and safeguarding. Pumps shall be base mounted or inline type and selected for non-overloading operation at all conditions. Closed coupled pumps are not acceptable. Provide a standby/redundant pump. Provide hot water bypass feeder, expansion tanks and air separator tank.
Boilers shall be capable of unloading to a minimum of 25% of full rated capacity. As a betterment to the government two boilers may be provided, each rated at 60% of the building heating load, with 50% minimum unloading capability for each boiler. If two boilers are provided, the proposer shall ensure that adequate space is available in the Mechanical Room for installation of the boilers with adequate clearance for service of the equipment.

31.17 Piping and Accessories

Heating water piping shall be Type L copper or ASTM A-53 Schedule 40 black steel. Ball valves shall be utilized for sizes up to 3 inches. Larger piping shall be equipped with gate valves. Butterfly valves are not acceptable. Piping supports shall be in accordance with MSS SP-59 and MSS SP-69. System shall include an air separator, expansion tank, chemical bypass feeder, and makeup water connections. Equip circulation pumps with strainers, check valve, balance valve, flexible couplings and isolation valves to permit pump maintenance. Pipe pump body drain and air vents from expansion tank to nearest floor drain. Provide pressure gages arranged such that pump differential pressure may be witnessed. Entire pump assembly shall be mounted on a structural steel frame equipped with housed spring vibration isolators. Provide manual or automatic water flow control valves at each coil and balancing valve in each loop of piping branch.

Heating hot water piping shall be insulated with 1-1/2 inch glass fiber insulation. Piping passing through hangers shall be supported on insulation shields.

31.18 Chiller Equipment

The chilled water system shall include exterior and interior mounted equipment. Chiller components exterior to the building shall be protected from freezing through the use of heat tape. All cold surfaces of equipment shall be covered with 1-1/2 inch flexible cellular insulation. Manufacturer's standard packaged controls shall be provided to handle all aspects of compressor staging and safeguarding. Pumps shall be base mounted and selected for non-overloading operation at all conditions. Close coupled pumps are not acceptable. Provide a standby/redundant pump and chilled water chemical bypass feeder.

Air cooled chillers shall be capable of unloading to a minimum of 25% of the full rated capacity. As a betterment to the government two chillers may be provided, each rated at 60% of the building cooling load, with 50% minimum unloading capability for each chiller. If two chillers are provided, the proposer shall ensure that adequate space is available for installation of the chillers with adequate clearance for service of the equipment.

31.19 Chilled Water Piping

Chilled water pipe shall be ASTM A 53 Schedule 40 black steel with threaded or welded joints. Ball valves shall be utilized for sizes up to 3 inches. Larger piping shall be equipped with gate valves. Piping supports shall be in accordance with MSS SP-59 and MSS SP-69. System shall include an air separator, expansion tank, chemical bypass feeder, makeup water connections, chemical treatment systems, and surge tank if system volume is not adequate. Equip circulation pumps with strainers, check valve, balance valve, flexible couplings and isolation valves to permit pump maintenance. Pipe pump body drain and air vents from expansion tank to nearest floor drain. Provide pressure gages arranged such that pump differential pressure may be witnessed. Entire pump assembly shall be mounted on a structural steel frame equipped with housed spring vibration isolators. Provide manual or automatic water flow control valves at each coil. Provide water flow balancing valve in each loop of piping branch.

All chilled water piping shall be insulated with 1-1/2 inch thick cellular glass insulation with a vapor barrier jacket. Piping passing through hangers shall be supported on insulation shields.

31.20 Thermostats

Thermostats shall be single setpoint type with continuous display of temperature setpoint and room temperature. Maximum differential shall be 2 degrees F. Caution shall be taken not to install thermostats in the center of a wall or location that would interfere with furniture placement, or on an exterior wall. Thermostat shall not be located in location subject to unrepresentative temperatures, such as locations opposite bathroom doors, laundry room doors, or exterior doors. Due to uncertainty of final systems furniture layout, coordinate location of thermostats with user during the design phase. Electrical rating shall not exceed 2.5 amperes at 30 volts ac. Housing shall be corrosion resistant metal or molded plastic.

31.21 Guide Specifications

The mechanical system design, submittal, and commissioning process shall conform to the latest edition of the following Corps of Engineers Guide specifications. Additional UFGS sections might be required during the design process.

32. ELECTRICAL DESIGN

32.1 Codes and Standards

32.1.1 The design and construction of the electrical systems shall be in compliance with: (1) National Fire Protection Association Codes & Standards, (2) the rules and recommendations of ANSI C2, (3) as required herein, (4) the referenced Unified Facility Guide Specifications (UFGS), and (5) Hunter AAF’s Installation Design Guide. Guide specifications are referenced in this RFP for their use in preparation of the design and shall be edited consistent with the criteria furnished. The most current edition of the codes and standards shall be used for building construction and life safety design. Where there is a conflict between the RFP and the codes and standards the most stringent shall apply. When codes and standards are in conflict, the most stringent shall apply. Standards and codes are listed in the guide specifications.

32.1.1.1 The following criteria references will be used in the design of this project:

- TM 5-811-1 Electric Power Supply and Distribution

- TM 5-811-2 Electrical Design, Interior Electrical Design
- TM 5-811-9 Voice/Data Telephone Systems
- TM 5-809-10 Seismic Design for Buildings
- TI 800-10 Technical Instructions Design Criteria
- ANSI-C2 National Electrical Safety Code
- ANSI/EIA/TIA-568 Commercial Building Telecommunications Cabling Standard
- ANSI/EIA/TIA-569 Commercial Building Standard for Telecommunications Pathways and Spaces
- ANSI/EIA/TIA-606 Administration Standard for the Telecommunications Infrastructure of Commercial Buildings
- NFPA 70 National Electrical Fire Code, 2002 Edition
- NFPA 101 Life Safety Code, 1999 Edition
- NFPA 780 Installation of Lightning Protection Systems
- Savannah District Design Manual for Military Construction
- IES Lighting Handbook
- Installation Design Handbook, Hunter Army Airfield, Ga.
- Installation Information Infrastructure Architecture (I3A) Design and Implementation Guide.
- UFC 3-580-10 Navy and Marine Corps Intranet (NMCI) Standard Construction Practices.

32.1.1.2 The Design/Build Contractor shall provide new UFGS specifications for this project in accordance with the requirements contained within this RFP.

32.1.2 Design/Build Contractor shall identify all hazardous locations as defined in NFPA 70. Hazardous locations limits shall be shown on drawings and the applicable class, division, and group shall be defined. All electrical equipment and wiring within these areas shall meet the applicable requirements.

32.2 Site Electrical

32.2.1 The building shall be served by a dedicated liquid-filled, pad mounted transformer, located adjacent or near as possible to the main distribution panel or switchboard in the building. See the site layout plan in the drawing set for proposed location of the transformer at the building.

32.2.1.1 The secondary compartment of each transformer shall be provided with current transformers and an electronic KWH-KW demand meter.

32.2.2 A minimum two-way 4” concrete duct-bank (one conduit for the phase conductors, the other for a spare) shall be provided for the primary distribution system, from the dip pole to the pad mounted transformer.

32.2.3 Any outages on the existing systems shall be scheduled for an off peak time (night, weekend, holiday) to be determined by Hunter AAF’s DPW office. Full preparation shall be done before the outage to keep the downtime duration to a minimum. Design/Build Contractor shall schedule all work items requiring an outage on the same feeder to be accomplished concurrently during the single outage. All coordination with the Hunter AAF’s DPW shall be done through the Contracting Officer's Representative.

32.2.4 The landscape architect shall be consulted to provide appropriate screening of pad-mounted transformer.

32.3 Area Lighting

32.3.1 The design of exterior lighting and associated lighting levels not indicated shall be in accordance Illuminating Engineering Society, IES, Lighting Handbook Reference and Application, 9th Edition. Exterior lighting shall include the new roads, parking lots, walkways, canopies, facility entrances/exits, and loading dock areas. All exterior lighting shall utilize metal halide lamps. Parking lots and street lighting shall be photocell controlled with multi-pole contactor. The contactor shall be equipped with Hand-Off-Auto switch. Location of the switch shall be coordinated with the User after Contract award. Walkways shall be illuminated to .5 footcandles. Parking areas shall be illuminated to 2 footcandles minimum with a uniformity ratio of 4:1 and utilize high cut-off type fixtures mounted on 30’ square aluminum poles. Where poles are located in areas capable of being struck by a vehicle, poles shall be mounted on concrete pedestals (height to be determined during the design of the project). Aluminum poles mounted in turf or landscaping areas shall be mounted on concrete pedestals 3” in height above the ground. Facility entrances/exits shall be illuminated with wall mounted fixtures or recessed fixtures mounted in the soffit, if applicable. All exterior fixtures shall be dark bronze anodized aluminum.

32.3.2 Metal poles shall be the pole manufacturer's standard design for supporting the number of fixtures indicated. Poles shall be designed for a wind velocity of 110 mi/hr (177 km/hr) at the base of the pole, with a wind gust factor of 1.3, and for the height and drag factors recommended by AASHTO LTS-3. The effective projected area of luminaries and other pole-mounted devices shall be taken into account in pole design. Poles shall have grounding provisions. The type of pole shaft material provided shall not be mixed for the same type of fixture types. Grounding connection shall be provided near the bottom of each metal pole and at each concrete pole anchor base. Scratched, stained, chipped, or dented poles shall not be installed.

32.3.3 All exterior site lighting shall be of the types that are compatible with security cameras and sensors.

32.3.4 All wall mounted site lighting fixtures shall have glare control shields or other methods of controlling glare and light pollution throughout the site.

32.4 Site Communications (Voice/Data Communications)

32.4.1 Hunter AAF’s DOIM office will install all outside plant cabling. The Design/Build Contractor shall install the ducts and manhole systems. The duct bank shall be installed 2 feet below grade (min) and shall be concrete encased. A pull wire shall be provided in all empty ducts.

32.4.2 The ductbank shall extend from the telecommunications service entrance room to an existing telecommunications manhole as shown on the proposed site plan.

32.4.3 The type of manholes will be 38Y-J4. Distance between manholes shall be no greater than 500 feet apart with a maximum of 100 feet of leeway (either shortening or lengthening the distance) for buildings and other obstructions if it does not violate the cable reel lengths for the cables to be installed. Each manhole will require a sump, ground rod, straps and cable racks. All ducts shall be installed at the lowest manhole window first, allowing future ducts to be installed above existing ducts. A single line diagram depicting the manhole and ductbank system for the project will be required. Manhole elevations and elevations of duct lines entering manholes will be shown. Manholes located in traffic areas shall be design for a H2O wheel loading as defined by AASHTO HB-13.

32.4.4 Coordinate the exact elevation, placement and orientation of communications manholes with Hunter AAF’s DOIM office through the Contracting Officer's Representative. Coordinate the tie-in of new ducts with Hunter AAF’s DOIM office through the Contracting Officer's Representative. The ducts shall be placed in the lowest terminators. No conduit crossovers in the telephone manholes will be allowed. The Contractor shall exercise care when performing work around communications cables in and around existing manholes. Any damage to existing cables shall be repaired or replaced at no cost to the Government.

32.4.5 Manholes and ductbank systems must be completed (to include pumped out and clean), inspected and accepted by the DOIM office at least six (6) months prior to the BOD (Beneficiary Occupancy Date) for the project.

32.4.6 The telecommunications design for this project shall comply with the Installation Information Infrastructure Architecture (I3A) Design and Implementation Guide.

32.5 Utility Routing

32.5.1 All power and communications ductlines shall be concrete encased under all paved areas and any other areas subject to vehicular traffic. Jack and bore under all existing roads crossed.

32.5.2 Coordinate the installation of the underground electric and communication lines with all other new utilities which shall include but not be limited to: power, communications, storm drains, sanitary sewers, water lines, steam lines, high temp water lines, chilled water lines, gas lines, and any other utilities. The minimum separation between electric or communication lines and other utility lines shall be 3 feet vertically and 3 feet horizontally when running adjacent. If utilities are crossing minimum separation shall be 1 foot vertically. In the case of concrete encasement, the clearances shall be measured from the outermost dimension of the utility line and shall have suitable supports on each side of the upper line to prevent transferring any direct load onto the lower line.

32.5.3 Prior to commencing work on any new underground power or communication line, the Design/Build Contractor shall stake the route of each line and indicate the exact location of all new ducts, primary sectionalizing cabinets and switches, manholes and transformers for approval by the Post’s DPW and DOIM offices, and by the Contracting Officer's Representative.

32.5.4 The routing of the secondary and communications service ductlines into the buildings shall be coordinated with the structural footings to avoid any conflicts.

32.5.5 New underground utilities including manholes shall be located outside the tree drip lines of existing trees scheduled to remain. Ducts that cannot be routed around tree drip lines shall be tunneled through the drip line area as approved by the Contracting Officer's Representative.

32.6 Grounding

32.6.1 The secondary electrical distribution system shall be the solidly grounded neutral type with no intentionally introduced grounding impedance. Grounding shall be in accordance with Article 250, National Electrical Code. A green insulated grounding conductor shall be provided with all branch and feeder wiring.

32.6.2 A grounding counterpoise shall be provided around the transformer pad and around the building. Counterpoises shall be bonded together. Building counterpoises provided under lightning protection system requirements shall be

connected to the transformer counterpoise, the main electrical panel, the main communications ground, building steel, and lightning protection down conductors. Ground rods shall be provided at each counterpoise connection. Connections shall be by exothermic weld. Building counterpoises shall be connected together where one building is located next to another building.

32.6.3 Resistance of driven grounding electrodes shall be tested at the time of installation by the fall-of-potential method. Resistance of the grounding systems shall be a maximum of 25 ohms.

32.6.4 Grounding conductors shall be copper. Driven grounding electrodes shall be ¾″ diameter solid rods of the following materials: copper or copper-clad steel. Rods over 10 feet long may be sectional built-up type.

32.6.5 Each telecommunications room and the NMCI Unsecure room shall be provided with a #6 bare grounding wire that extends from the facility's electrical service entrance and is bonded to the building grounding system. Ground wire shall be bonded to grounding busbars located at the bottom of each 4′ wide plywood backboard. Coil ground wire to provide sufficient length to reach any point on each backboard.

32.6.6 Grounding and bonding shall conform to UL 467.

32.7 Materials

Materials shall be manufactured to meet the standards listed in each specification section as applicable. Materials shall be the products of manufacturers regularly engaged in the manufacture of such products for a period of not less than 2 years.

32.8 Lighting

32.8.1 Lighting shall be provided in the building. Average maintained horizontal illumination levels at 2.5 feet above the finished floor shall be provided as listed in TI 800-01 Design Criteria. Vertical illumination levels for all rooms and horizontal and vertical illumination levels for rooms or areas that are not listed on the Schedules in TI-800-01 shall be in accordance with the Illuminating Engineering Society, IES, Lighting Handbook Reference and Application, 9th Edition. The IES handbook shall also be consulted for additional lighting requirements.

32.8.1.1 Average lighting levels for each space shall be as follows:

Offices/Classrooms:	50 f.c.
Corridors:	20 f.c.
Utility Rooms:	30 f.c.
Parachute Inspection and Repair:	100 f.c.
Parachute Drying Tower:	75 f.c.
Restrooms/locker rooms:	30 f.c.
Vehicle Maintenance:	70 f.c.

32.8.2 General ambient illumination shall provide a generally glare-free, high quality lighting environment. Linear-type fluorescent lighting installations in offices, conference room, workroom, file rooms and similar spaces shall achieve Visual Comfort Probabilities (VCP) of 70 or higher. Fluorescent high bay fixtures shall be used in the high bay areas.

32.8.2.1 Lighting in the VMF areas shall be of the type and shall be arranged such that the amount of light under vehicle hoods can be maximized. Use of asymmetric or angled reflectors shall be considered. Point by point layouts or

other similar documentation shall be provided showing probable lighting levels within vehicle workspaces.

32.8.2.2 Where high and/or low bay fixtures are chosen, fluorescent type fixtures shall be used with multiple switches for multi-level light capability.

32.8.3 Occupancy sensors shall be used in storage rooms and restrooms. Occupancy sensors may also be used in other areas for energy savings.

32.8.4 Fluorescent lamps shall be T8 (4100° K) or compact. Fluorescent ballast shall be the electronic type. All fluorescent lamps shall be low mercury content certified to pass the U.S. Environmental Protection Agency (EPA) Toxic Characteristics Leaching Procedures (TCLP) test for non-hazardous waste.

32.8.5 Dimming shall be provided for Training Rooms and Conference rooms. Dimming ballasts shall have range of 1% to 100%.

32.8.6 Wall switches shall be located on the strike side of a door, 6 inches from the door opening, unless otherwise functionally required. Wall switches shall be provided at each entrance to a space, unless otherwise noted.

32.8.7 Incandescent lighting fixtures may be utilized only in small, infrequently used areas, such as janitor closets.

32.8.8 All lighting requirements with respect to the Armory Vault shall be in compliance with AR 190-11. See paragraph 32.8.16.3 for emergency lighting requirements.

32.8.9 Security lighting shall be provided at service entrances to all utility rooms (i.e. mechanical, electrical, communications, etc.) with exterior entrances. Wall mounted security light fixtures shall be shrouded to minimize glare. Fixture shall use compact fluorescent lamps whenever possible; where compact fluorescent lamps are inadequate, fixtures shall be equipped with metal halide lamps.

32.8.10 Wall mounted light fixtures at main entrances and other high visibility areas shall be selected for aesthetics and compatibility with the building architecture.

32.8.11 Lighting shall be provided for specialty items such as display cases, accent lighting and other items as necessary.

32.8.12 Lamps

a. Lamps shall be provided with all fixtures.
b. Four foot fluorescent lamps shall be the rapid-start, T-8, 32W, 3500°K color temperature, minimum CRI of 86, 2950 initial lumens, 2800 maintained lumens.
c. Compact fluorescent lamps shall be rapid start four pin biax, 4100°K color temperature, minimum CRI of 82.

32.8.13 Lenses

Plastic lenses shall be heat-resistant 100 percent virgin acrylic. Lenses for recessed fluorescent fixtures (troffers) shall have a nominal 0.125” thick dimension.

32.8.14 Suspended Ceiling

Where lighting fixtures are installed in suspended ceilings, the suspended ceiling grid system shall be capable of carrying the fixture weights without exceeding the deflection limits indicated in ASTM C 635 and C 636. Fixtures shall be supported in accordance with NFPA 70.

32.8.15 Accessibility of Lighting Fixtures

Lighting fixtures shall be readily accessible for maintenance, and access shall not be obstructed by equipment or materials.

32.8.16 Emergency Lighting

32.8.16.1 Illuminated exit signs and emergency lights shall be provided for all emergency exits and passageways as required by the NFPA Life Safety Code No. 101. Exit fixtures shall be LED (red).

32.8.16.2 Upon loss of power the emergency lamp shall light regardless of the light switch position.

32.8.16.3 Night lighting (24 hour, unswitched) shall be provided at the entrance to the Armory Vault. The fixture is also to be equipped with emergency battery ballast.

32.9 Conduit, Fittings and Tubing

32.9.1 Conduit

Conduit shall conform to UL and NEMA Standards for metal conduit, fiberglass conduit and polyvinyl chloride (PVC) conduit.

32.9.1.1 The inside conduit system shall be rigid steel, IMC Type I, or Electrical Metallic Tubing (EMT). Use of PVC conduit underground is permissible where conduit is changed to galvanized rigid steel before bending up and penetrating the slab. Minimum conduit size shall be 1/2 inch. Three-eighth inch, 6-foot maximum length flexible conduit may be used with pre-wired lighting fixtures.

32.9.1.2 All conduit shall be used in accordance with National Electrical Code limitations.

32.9.2 Fittings

Fittings shall conform to UL 514, as applicable. EMT fittings shall be the steel compression, rain tight and concrete tight type.

32.10 Boxes

Sheet-steel outlet and junction boxes shall conform to UL 514 as applicable.

32.11 Conductors

32.11.1 Insulated secondary conductors installed on the load side of the main service equipment shall conform to UL 486 as applicable.

32.11.2 The minimum power conductor size shall be No. 12 AWG. Conductors shall be copper, except that feeder conductors or service entrance conductors may be either copper or aluminum alloy for sizes No. 6 AWG or larger.

32.11.3 Each phase load conductor of three-phase systems shall be color coded. Color coding of conductors of three-phase loads is required. The color code shall be as follows:

a. 120/208 volt, three-phase: Red, black and blue.

b. 480/277 volt, three-phase: Brown, orange and yellow.

32.12 Circuit Breakers and Panelboards

32.12.1 General

Circuit breakers and panelboards shall be products of the same manufacturer.

32.12.2 Spare Capacity

Provide space capacity of 20 percent in the service and distribution equipment and wiringwith 10 percent spare breakers and 10 percent space only.

32.12.3 Protective Devices

32.12.3.1 Circuit breakers shall conform to UL 489.

32.12.3.2 Service and distribution equipment shall be of the circuit breaker and branch circuit panelboards shall be of the circuit breaker type.

32.12.3.3 Circuit breakers shall have trip indicating features.

32.12.3.4 Two-pole breakers shall not be installed in a single-pole space. Circuit breakers with ground fault interrupters shall occupy a single space only where available.

32.12.3.5 Multiple pole circuit breakers shall have a single operating handle, an internal, mechanical, non tamper common trip mechanism.

32.12.3.6 Circuit breakers shall be the bolt-on type. Breakers shall be minimum 10,000-amp interrupting capacity. Exact AIC shall be determined at point of application by analysis.

32.12.3.7 Branch circuit breakers for life-safety critical circuits will be locked-on using standard locking tabs that cannot be removed without a tool and that do not interfere with any other equipment features.

32.12.3.8 Multiphase circuits shall use multi pole breakers.

32.12.3.9 Equipment Rating

Each panelboard shall have short circuit rating that is capable of withstanding the stresses of a fault level that will be available.

32.12.3.10 Panelboards shall conform to NEMA PB 1 and UL 67 as applicable.

32.13 Wiring Devices

32.13.1 General

32.13.1.1 Unless otherwise indicated, wiring devices shall be suitable for use in ordinary commercial environments. Devices shall be approved for use in grounded metal or plastic boxes and with grounded metal or plastic cover plates. Snap switches shall be suitable for continuous operation in any mounting position. All wiring devices shall be specification grade minimum.

32.13.1.2 Unless otherwise needed, mounted wiring devices shall be suitable for flush installation within a flush device box.

32.13.1.3 Devices shall not use screws threaded into plastic or any other type stud, etc., that relies on plastic as a holding medium.

32.13.2 Mounting and Location

32.13.2.1 Devices located in the same approximate position on one section of wall, floor, column, etc., shall be grouped to create a functional and pleasing appearance. Similar outlet groups throughout the job shall be similarly grouped. Unless necessary otherwise, groups shall be developed as follows where applicable:

a. Devices at different levels shall be aligned vertically.

b. Devices at the same level shall, where possible, be grouped using sectional gang boxes, except that individual dimmer switches shall be installed in an individual 2-gang box.

c. Installation mounting heights and locations shall conform to ADA requirements.

32.13.2.2 Devices or device groups occurring in architectural features, i.e., wall sections, etc., shall be accurately centered in the feature(s), unless functionally required otherwise.

32.13.2.3 Wall switches shall be located on the strike side of a door, 6 inches from the door opening, unless otherwise functionally required.

32.13.3 Toggle Switches

32.13.3.1 Wall switches for general lighting branch circuits shall be specification grade, standard line maintained, two position AC toggle switches rated 20 amperes. Wiring terminals shall be of the screw type, with side and/or back wiring.

32.13.3.2 Toggle switches shall conform to UL and NEMA Standards.

32.13.4 Receptacles

32.13.4.1 Wall receptacle for general attachment applications in public or equipment areas shall be specification grade, standard line, flush mounting, straight blade grounding type rated 125 volts, and 20 amperes.

32.13.4.2 Receptacles shall conform to UL and NEMA Standards. Receptacles shall be side and back wired with screw type terminals. Receptacles shall be the duplex type, except for clock and specialty outlets.

32.13.4.3 The number of receptacles in office areas shall be a minimum of two duplex receptacles for each desk, with one receptacle outlet minimum for each item of electric office equipment. The functional room requirements specified in Appendix B are minimum requirements. Provide receptacles and telephone/data outlet for each desk as specified herein. Calculate 8 square meters or portion of floor space for each desk.

32.13.4.4 Receptacles in corridors shall be provided for floor cleaning equipment. The receptacles shall be spaced in such a manner as to permit full coverage by the equipment with a 25-foot extension cord. Floor receptacles shall not be used.

32.13.5 Special Function Receptacles

32.13.5.1 Appropriate outlet types shall be provided for items identified in other portions of the RFP (i.e coffee pots, vending machines, overhead motorized projectors and screens, etc.) Provide appropriate outlet types for any Government furnished equipment identified. Receptacles serving these types of equipment shall be connected to dedicated circuits.

32.13.5.2 Outlets shall be provided for copying machines. The user may adjust locations after the Final Review stage. Copy machine outlets shall be connected to dedicated circuits.

32.13.5.3 Waterproof receptacles shall be provided on the outside areas at all entrances. Receptacles shall be type that maintain waterproof rating while appliance is plugged in.

32.13.5.4 Ground Fault Circuit Interrupter (GFCI) Outlets

a. GFCI outlets are to be used for 20-amp convenience type outlets in the following areas: Outdoor, wet locations, toilets, and other locations as required by the National Electric Code or OSHA.

b. Ground Fault Circuit Interrupted (GFCI) receptacles shall be U.L. listed as providing protection for personnel against line-to-ground shock hazard. The GFCI device shall continuously monitor current in the two-phase conductors and shall interrupt the circuit for a current differential of more than a predetermined value to the outlet(s). The device shall be solid state with test button and indicator, a reset button, all properly labeled and with printed instructions. The GFCI receptacle shall be the end-of-line or feed-thru type as appropriate to the installation.

c. Each receptacle with GFCI requirement shall have self contained GFCI protection. A single GFCI receptacle shall not provide downstream protection.

32.13.6 Provide two 20 A rated cord reel receptacles for each bay in the Vehicle Maintenance Area. Reels shall be located as far apart as possible in each bay for optimal useage.

32.13.7 An overhead projector system will be used in each Conference Room and each classroom. Provide a receptacle at the ceiling for power to the projector and provide the necessary conduits, wiring, outlets, etc. for the User to connect a computer to operate with this projector. Location of these outlets will be coordinated with the User after contract award. Also coordinate location with overhead ceiling fan if provided.

32.1.8 Provide a minimum of one 120 volt, 20 Amp duplex receptacles, on a dedicated circuit, on each 4’ backboard, for power supply to phone switch, network electronics, etc.

32.14 Cover Plates

32.14.1 General

Cover plates shall in general be standard line wall plates for standard line wiring devices in ordinary dry locations and flush mounted shall meet applicable requirements of the following codes and standards: NEC, NEMA Standard WD-1, U.L. cover plates for flush, dry, ordinary locations shall be standard configuration, one piece plates with matching screws.

32.14.2 Wall cover plate styles, material and finishes shall be as follows:

a. Painted steel or nylon plates with matching screws shall be used for flush mounted devices.

b. Galvanized raised steel smooth design, shall be used in equipment rooms with surface mounted devices.

c. Plates with labeling shall be the engraved type, unless otherwise indicated.

d. Color of devices and associated faceplates shall be coordinated with the Architect.

32.14.3 Cover plate mounting screws shall be tightened to a snug tension and aligned with any screw slot in a vertical position.

32.14.4 Wiring devices, boxes, wiring and cover plates shall be carefully coordinated to provide an installation, including grounding that is totally in accordance with U.L. listing restrictions and manufacturer's published installation recommendations.

32.14.5 Cover plates shall be provided for each device furnished and installed by the Contractor. Cover plates and devices shall be of matching finish, unless otherwise provided for aesthetic reasons.

32.14.6 Devices shall be mounted recessed for flush installations, unless otherwise necessary.

32.14.7 Receptacles located outdoors shall be GFCI, weatherproof type. Weatherproof cover plates shall be suitable for damp locations and for wet locations and shall maintain wet location rating whether devices is plugged in or not. Receptacles shall be located near each entrance to building and where required by Code.

32.15 Electrical Disconnects

Electrical disconnects shall be installed adjacent to equipment and accessible to equipment operators for the following equipment: Motors and equipment as required by the NEC and OSHA requirements.

32.16 Telephone, Data and Cable TV.

32.16.1 The design for telephone, data and CATV systems in this project shall comply with the following items. The telecommunications Contractor shall have the following qualifications:

3 years experience in the application, installation, splicing, and testing of the required telecommunications system equipment.

Certification showing qualifications to install and test actual equipment being installed.

32.16.2 The User will provide all data and telephone horizontal cabling within this facility. The installation and termination of the cabling will be performed under a separate contract. The design/build Contractor will be responsible for providing and installing all other LAN and telephone system components to achieve a completely operational cabling system including, but not limited to, all necessary raceways, jacks, patch panels, patch cords and faceplates. All duplex outlets (voice/data) and cable TV (CATV) outlets will be 18 inches above finish floor (AFF) except wall telephone outlets will be 54

inches AFF. Voice and data jacks will be in the same outlet. All station jacks, patch panels and 110 blocks shall be Category 6 rated for T568B termination. Voice and data jacks shall be RJ-45 type. All voice cables shall be terminated on 110 style punch-down blocks in the Communicaitons Rooms. Coordinate with Hunter AAF's Communications Officer layouts of the patch panels in the equipment racks. All equipment racks shall be floor mounted. The horizontal cable for the CATV shall be RG-6 and the connector shall be a "F" type and terminated on splitters. The backbone cable between floors shall be RG-11 type. All splitters shall be located on CATV backboard in Communications rooms. All CATV horizontal cabling shall be homerun between CATV jacks and CATV backboard in Communications rooms. The Design/Build Contractor shall perform calculations on the CATV system to determine whether amplifiers are needed on certain floors. The Design/Build Contractor shall be responsible for amplifiers where determined to be necessary. All CATV headend equipment, incoming service, etc. shall be furnished and installed by the local Cable TV Company.

32.16.2.1 Design/Build Contractor shall ensure that data cables do not exceed 250 feet in length.

32.16.2.2 Provide an additional floor rack and 24 port patch panel (copper) in the NMCI Unsecure room. Locate rack near center of room.

32.16.3 Conduit from data, telephone or CATV outlets shall be a minimum of 1-inch electrical metallic tubing (EMT) conduit. One inch EMT conduits shall be installed as a "home run" between the telecommunications closet telephone backboard and each outlet or between each outlet and the cable tray. "Home run" means one continuous conduit run with NO pull boxes and NO more than two 90-degree bends in the entire conduit run. Cable trays shall be used to provide a centralized cable distribution system in throughout the building if space permits and is readily accessible. Cable trays shall be solid bottom type and shall be no higher than 6 inches above finished ceilings. The cable tray shall be provided with one square-inch of cross-sectional area per outlet location to be served. A separate cable tray system shall be provided for the secure (red) data system cables. This cable tray shall be installed such that the secure system cables will be no closer than 36" to any other low voltage system's cables. An optimal fill ratio of 40% should be the design plan. The EMT conduit shall be physically strapped to the cable tray and an anti-chaffing grommet attached. All empty conduits routed to outlet boxes shall be provided with a pull cord. All conduits to outlet boxes shall be provided with a pull cord for future installation of fiber optic cable (FOC).

32.16.3.1 All outlet boxes for telecommunications cables shall be sized 4-11/16" square and 2-1/8" deep.

32.16.4 Provide type AC fire retardant plywood backboards along all walls in each Communications room, from floor to ceiling. Provide backboards along two walls in NMCI Unsecure room in the same manner.

32.16.5 All communications systems shall be tested in accordance with EIA/TIA 606 standards.

32.16.6 Layout for the telecommunications rooms shall be in accordance with the Installation Information Infrastructure Architecture (I3A) Design and Implementation Guide.

32.16.7 CATV jacks shall be provided in the following locations:

All Classrooms
All Conference Rooms
All Briefing Rooms
All break rooms.

32.16.8 Refer to Appendix B - Functional Room Requirements for quantity and type of system connection requirements in each space.

32.17 Lightning Protection

Lightning protection for the building is to be provided per NFPA 780 and Underwriter's Laboratories Inc., Bulletin No. 96-A, "Master Labeled Lighting Protection Systems." In general, complete protection via air terminals and ground counterpoise loop shall be provided. The system shall have the appropriate U.L. master label installed on the building.

32.18 Seismic Protection

Seismic design shall be in accordance with Army Technical Manual, TI 809-04, Seismic Design for Buildings, dated December 1998 and Specification Section 16070A Seismic Protection For Electrical Equipment.

32.19 Fire Alarm

32.19.1 The building will have an intelligent, addressable fire alarm system. The fire alarm system will consist of a control panel, manual pull stations, horns and strobe lights, sprinkler waterflow switches, valve tamper switches, air pressure supervisory switches, control and monitor modules for non-addressable devices and smoke and heat detectors. Fire Alarm system for this building shall comply with the Americans with Disabilities Act (ADA).

32.19.2 The fire alarm system shall transmit all alarm and trouble signals to Hunter AAF’s central receiving station via RF transceiver through a wall mounted antenna. The transceiver shall be manufactured by Monaco and shall be compatible with the existing central receiving station equipment. All modifications to the central receiving equipment required for a completely operational system shall be determined and performed by the Design/Build Contractor.

32.19.2 In addition to the manual pull stations at all exits, provide pull stations at all other exterior entrances and in all electrical, mechanical, communications rooms. In addition to the horns/strobes throughout the facility, provide them also in all electrical, mechanical and communications rooms.

32.19.3 Provide horns/strobes throughout the facility so that alarm sound levels at any location are at least 15 dB above normal ambient sound levels and can be heard in all rooms (i.e. in shower with water running). Provide strobe lights to comply with NFPA 72-1999. Strobe lights shall meet Underwriter’s Laboratories (UL) Standard 1971 and shall be synchronized.

32.19.4 The fire alarm system shall be a completely supervised system employing analog addressable initiating devices and multiplex communication techniques. Each detection, monitor and control device shall be individually addressable. Devices not inherently addressable (i.e. tamper, flow switches etc.) shall be equipped with addressable monitor and control modules.

32.19.5 Coordinate with the other disciplines to provide tamper switches on all fire alarm system control valves and the Post Indicator Valve (PIV).

32.19.6 System shall be a four wire, two conduit loop system. Vertical and horizontal separation of conduits shall be in accordance with NFPA 72. Conduits are to be marked with a red stripe every 10 feet. All junction or pullboxes shall be painted red.

32.19.7 Provide cabinet mounted MOV based surge protection device in addition to surge protection integral to the FACP. Device shall be UL 1449 listed and shall satisfy the requirements of IEEE C62.41.

32.19.8 Provide a knox box at the facility entrance and at the fence gate, if fire trucks are prevented from entering the site due to the gate.

32.20 Intrusion Detection System (IDS)

An IDS system will be provided to monitor the Armory vault and the main entrance only. The system components will be procured and installed by the Government. The Design/Build Contractor shall provide a complete conduit and junction box infrastructure to support the system wiring and devices. Coordinate all conduit and box requirements with system installer and the Contracting Officer.

32.21 Service Equipment

32.21.1 Provide only one main service disconnect device for the power supply to the facility and located in the Main Distribution Panel (MDP) inside the building.

32.21.2 The main service equipment and all other electrical equipment shall fit into the space required and provided with all the access and clearance required by code.

32.22 Transient Voltage Surge Suppression(TVSS).

Surge suppressors shall parallel the operating devices in providing a path to ground for an electrical surge and limiting the magnitude of transient voltage surges on the system. Units shall be mounted adjacent to the Main Distribution Panel in accordance with the manufacturer recommendation. Unit shall be hard-wired into the electrical distribution system utilizing a circuit breaker connection. Units shall be tested in accordance with IEEE C62.45 using an IEEE C62.41 Category B waveform. Units shall be UL 1449 listed and labeled. Modes of protection shall be normal mode (L-N, L-L) and common mode (L-G, N-G). The unit shall include self-diagnostic and self-testing capabilities, a resettable transient event counter, and a local audible alarm with mute capability.

32.23 Testing

32.23.1 The Contractor shall retain a qualified testing firm to provide inspections, tests, and evaluations to determine that the equipment designated herein is installed and adjusted for successful energization and operation. The testing firm shall be a member in good standing of the National Electrical Testing Association (NETA), or as approved by the Contracting Officer.

32.23.1.1 The testing firm shall provide a supervising engineering representative to interface with the installing Contractor and the Government. Testing technicians shall be provided as required to do the work under approved schedules.

32.23.1.2 Designated equipment shall be tested to verify operation and adjustment. Reports shall be issued documenting checks and test results.

32.23.2 Qualifications of Testers

32.23.2.1 The testing firm shall have 2 or more years experience related to the testing of equipment designated herein. They shall be able to identify suitable engineering and technical resources to complete the work under approved schedules.

32.23.2.2 The supervising engineering representatives shall have extensive knowledge of the products involved and at least 2 years experience conducting tests. All testing shall be conducted under the direct supervision of the supervising engineering representative. The supervising engineering representative will prepare and sign reports and be available for consultation with Contracting Officer.

32.23.2.3 Testing technicians shall be trained and experienced on the testing they conduct. Submit testing personnel resumes for approval prior to testing.

32.23.2.4 Testing equipment required to conduct the specified tests shall be furnished by the testing organization unless noted otherwise. Testing equipment shall be in good working order and comply with the requirements of applicable industry standards. Equipment shall have been calibrated within 6 months of use in this project.

32.23.2.5 The testing firm shall utilize comprehensive report forms to document test results on all equipment and products. Upon completion of the work, the report forms shall be signed by the supervising engineering representative and included in the final report. Report forms shall identify equipment by model number or by customer's identification number (where assigned). Report forms shall be suitable for reproduction on normal office copying machines. Sample forms shall be submitted for the Contracting Officer's review.

32.23.2.6 Testing shall be done in accordance with the manufacturer's instructions, these specifications, and applicable NETA, NEMA ASA, ANSI, and ASTM standards. All over potential testing values shall be approved by the Contracting Officer prior to such tests.

32.23.2.7 The testing firm shall collaborate with the manufacturer's representative.

32.23.3 Electric system shall be tested at no load and at full load. Voltage shall be within the National Electrical Code recommended 5 percent limit of the nominal 208/120 volt and 480/277 volt systems.

32.23.4 Illumination levels shall be within plus 20 percent of the calculated foot-candles.

32.23.5 The Contractor shall test circuits to assure them to be free of grounds; light and test each lamp; prove and test energy available at the load side of disconnect switches and the final point of connection to driven equipment and at outlets. The Contractor shall make all reasonable tests as required to prove the integrity of his work and shall leave the complete electrical installation in first class condition and ready for operation.

32.23.6 The Contractor shall carefully check the load on each phase when connecting the various branch circuits in each panelboard and shall make necessary circuit changes within functional switching groups. When all load is turned on and the system is operating at 100 percent demand, the initial unbalance shall not exceed 10 percent.

32.23.7 Individual systems shall be thoroughly tested and demonstrated to meet full functional requirements.

32.23.8 The Contractor shall perform tests, verifications, and settings as follows:

a. Resistance tests of the ground source.

b. Feeder circuits rated below 600 volts shall be Biddle Megger (or equal) tested between phase conductors and between phase conductors and ground, using a 1,000 V Megger. Tests shall be made upon completion of all connections and splices. Tests shall indicate freedom from short circuits and grounds.

c. Overload heaters and/or fuses shall be inspected to verify that they are properly sized based on nameplate current values.

d. Proper operation of control and alarm circuits shall be demonstrated.

e. High voltage cables/termination tests before power is applied.

32.23.9 Complete operational test of the fire alarm, CCTV, intrusion detection system, and telephone systems, including equal sound distribution in the designated areas.

32.23.10 All parallel circuits shall be tested for proper phasing using hot phasing or other comparable techniques.

32.23.11 Operation of all control and alarm circuits.

32.24 The electrical system shall comply with the Americans with Disabilities Act (ADA) for buildings identified in the RFP with this requirement.

32.25 The design and construction of the electrical system shall be in accordance with the most current codes and standards. Provide adequate electrical power and safe and efficient distribution from panelboards and switchboards to lighting, wiring devices, motors, miscellaneous equipment, kitchen equipment, appliances and the locations where it is needed, based on the project requirements as contained within this RFP (architectural, mechanical, etc).

32.26 Series rated breakers shall not be used.

32.27 Nonlinear Loads. The increasing presence of solid-state switching mode power supply components in electrical equipment requires the designer to consider the equipment to be supplied by the distribution system and to make provisions for nonlinear loads in this facility. These loads generate harmonics, which can overload conventionally-sized conductors or equipment causing safety hazards and premature failures.

32.28 For additional electrical criteria, See TI-800-01 (Design Criteria).

32.29 UNIFIED FACILITY GUIDE SPECIFICATIONS (UFGS)

32.29.1 The project specifications shall be prepared using the guide specifications. If additional specification sections are required, contact the Savannah District to see if a guide specification exists. If a guide specification does not exist, the Design/Build Contractor will prepare job specific specifications.

32.29.2 The guide specifications are to be edited and adapted by the designer to fit each individual project in accordance with the project requirements. The designer is to delete the inapplicable portions of the guide specifications and revise and/or supplement, as required, the applicable portions to provide a complete project specification. Deviations from the specification intent will not be allowed without prior approval from the Savannah District.

32.29.3 The specifications sections listed in paragraph 6.1.4 shall be edited and submitted at the Final Review stage or earlier. Sections shall be submitted in hard copy form that indicates the changes being added and those to

be deleted. For example if Microsoft Word is used, this feature is located under “Tools” “Track Changes” “Highlight Changes”.

32.29.4 Location of Documents referenced in Section 30.

32.29.4.1 TI-800-01 & TI-800-04:
http://www.hnd.usace.army.mil/techinfo/ti.htm

32.29.4.2 Specifications Sections – http://www.ccb.org/ufgs/ufgs.htm

32.29.4.3 Installation Information Infrastructure Architecture (I3A) Design and Implementation Guide –
http://akea-cio.army.mil/i3a/General_Docs/Implementation or
http://www.hnd.usace.army.mil/paxspt/isce/pubs.html

32.30 Services and Submittal Data

Services shall be provided as specified by this and other sections of the specifications. In general, services include complete design, documentation, construction, testing, certification, final inspection and correction of punch list items, I.O.M. manuals, record drawings, instruction of operating personnel, and correction of any defective work. During the design and construction phases of the work, requested submittal data shall be provided to the Savannah District Corps of Engineers for review and comment. Submittal items noted below by an asterisk shall also be provided in preliminary form as part of each Proposal. The minimum required submittal data items are:

a. Design calculations and drawings.

b. Detailed information as specified above in this section.

c. Detailed information as specified above in this section to be submitted with the Proposal.

d. Any information, selections of equipment, or layout drawing, etc., that the Proposing Contractor feels is necessary to fully understand his proposal.

e. Primary service routing, sizing, and materials, including cables and primary transformer.

f. Building service protective devices types and sizes.

g. Building electrical system one-line-diagram, showing basic distribution and metering schemes. Provide minimum sizes for step-down transformers.

h. Panelboards, disconnect switches, contactors, and protective devices.

i. Raceways and fittings.

j. Wiring devices and cover plates.

k. Cables, conductors, and connectors.

l. Grounding system materials and connectors.

m. Telephone system raceway layouts plan.

n. Lighting fixture designs for each area, including fixture type selections, light levels, area/fixture switching and/or dimming methods and patterns.

o. Lamps for lighting fixtures.

p. Step-down, dry type transformers.

q. Fluorescent lighting fixture ballast types.

r. The trip report shall be incorporated in the Design Analysis.

32.31 Final Design Analysis

32.31.1 General Description

A description of the general parameters, functional and technical requirements, and objectives and provisions of the design shall be described.

32.31.2 Design calculations and supporting documentation shall be done to support design considerations. Calculations will be computed and checked by a Registered Electrical Engineer. Supporting documentation will be clear and legible with a tabulation showing all design loads and conditions. The source of loading conditions, formulas and references will be identified. Assumptions and conclusions will be explained and cross-referencing will be clear. Calculations and data for the following shall be included in the analysis:

32.31.3 Lighting calculations shall determine maintained foot-candle (fc) levels in all areas. Method of computation for interior areas shall normally be the zonal cavity method as described in the I.E.S. handbook, current edition. Other methods for specific applications shall be used when necessary for the particular design. Catalog cuts of all lighting fixtures and luminaries upon which the design is based shall be included in the design analysis.

32.31.4 Short-circuit calculations shall be made to determine the rating of all protective equipment and bus bracing. In all cases, available symmetrical short-circuit current at the service equipment shall be indicated. (If more accurate data is not available, assume infinite bus on the primary and also consider motor contribution to fault current.) Short-circuit calculations shall be carried out to the point where all protective elements are demonstrated to be properly rated to withstand potential faults and/or safely interrupt faults as required.

32.31.5 Voltage drop calculations shall be done for the service, all feeders and on worst-case branch circuits supplied by each panelboard. Tables, curves and short-cut methods obtained from accepted sources such as Industrial Power Systems Data Book by General Electric or Architects and Engineers Data Book by Westinghouse may be used. The source of the data must be referenced.

32.31.6 Calculations of all connected loads, demand factors, and demand loads by circuit number for each panel and switchboard shall be provided. This includes spare circuits. The following shall be considered in the development of panelboard and switchboards.

32.31.6.1 A summary of panel demand loads, feeder sizes, main switch fuse or circuit breaker trip size, service entrance size and transformer size.

32.31.6.2 Each motor feeder and motor protective devices shall be computed in accordance with the requirements of the National Electrical Code (NEC).

32.31.6.3 In computing sizes of feeders and transformers, demands shall be applied to the connected loads. Where the nature of loading cycles are known, oil filled transformer ratings shall be based on ANSI C57.91 rating factors to allow for the most economical design.

32.31.6.4 Ambient-temperature or conductor grouping factors considered in the selection of equipment and/or conductor sizes shall be indicated. Weight and dimensions of each major items of equipment (supported by manufacturer's name and catalog/model numbers) shall be provided.

32.31.7 Detail shop drawings shall be submitted and shall consist of a complete list of equipment and materials, including manufacturer's descriptive and technical data; catalog cuts and any special installation instructions that may be required. Detail drawings shall be submitted for all materials and equipment specified. Drawings shall show applicable schematic diagrams, and equipment layout and anchorage. Power system, short-circuit analysis or study shall be submitted.

32.32.8 Field Trip Report

The electrical engineer responsible for the design is required to visit the site and furnish a trip report with his final design submittal. During the site visit the responsible electrical engineer shall coordinate with the appropriate Fort Stewart/Hunter AAF personnel concerning the following: (a) power system characteristics; (b) fire alarm reporting system requirements; (c) voice/data communications systems and (c) any other items necessary for the design of supporting services to the facility. The report shall include names and titles of persons contacted and a brief description of all guidance information or instructions received.

- End of Section –

HUNTER AAF BORROW PIT PERMIT AND GUIDANCE

FORT STEWART & HUNTER ARMY AIRFIELD
BORROW PIT EXCAVATION PERMIT

*Date of Application:

*Applicant (user/unit):

*Borrow Pit Location (Pit #): *Ft. Stewart/HAAF training area,*

*Cubic Yards required:

*Type of Material:

*Final Destination:

*Date to Begin:

*Date to End:

*POC (On-site Manager):

*POC Phone Number:

Below line for office use only.

On-Site Manager/Operator – mobile number

Government Contracting Officer Representative

_____

Approved for Borrow Pit Number

_____

Borrow Pit Management - Environmental

(*912-767-9443/fax-767-9779, George Harris or Anthony Austermann*)

*Please retain a copy of this Permit, on site, with the operator and notify Range Control when entering or leaving the training area.

Borrow Pit Release/Checkout is required before leaving the borrow pit area.

_____

Release Approved by/date

Surface Mining (Borrow Pit) Standard Operating Procedure

Excavation Procedure:

1. The Operator of the borrow pit will maintain or create a rim ditch to maximize accessibility to borrow pit materials and ultimately to optimize excavation of that material.
2. The Operator will utilize a water pump, where and when appropriate allowing him access to fill materials in a manner consistent with proper surfacing mining procedures.
3. The Operator shall show a plan as to how the property will be mined, the limits of the affected acreage, the natural drainage features and water disposal, the initial mining and overburden (spoil) area(s), the erosion and sedimentation controls, the ingress/egress area(s), the direction and schedule of mining advancement, the area to be left undisturbed (buffer) where necessary, and a plan that shows projected final reclamation of the site.
4. All borrow pit design and excavation actions shall support the objective of the borrow pit eventually becoming a recreational fishpond, if soil conditions, location and ground water resources favor such development. To accomplish this objective the following procedures must be employed.
    a. Average depth, when abandoned, will be 6 feet minimum and 12 feet maximum (water depth will range from 3-8 feet).
    b. Borrow pits will be excavated in a manner, *from the beginning*, to ultimately move them to a useable recreational fishpond.

***The pit operator shall be responsible for maintaining a 4:1 slope on all pit walls/edges and marking these slopes/edges in a manner as to prevent any foot or vehicle traffic from inadvertently falling into the** pit.*

Erosion & Sedimentation Control Measures:
- Remain within the boundaries of the borrow pit, which are marked by "surrounding trees and the perimeter road", while making every effort to retain and/or create a buffer zone(s) of undisturbed/natural vegetation following all guideline within *Georgia's Best Management Practices* to prevent silts and sediments from leaving the borrow pit area and entering the waters of the State of Georgia.

Water Quality Control Measures:
- Borrow pit excavation shall not be conducted within 100 feet of the banks of any waters of the State of Georgia, nor discharges to the water or ground to ensure no adverse affects on these waters.

- No Point Source discharges shall be allowed without coordination with the Environmental Branch, and BMPs will be followed at all times.

Sensitive/Special Sites Measures:
- If historical or archaeological resources are encountered during excavation of this borrow pit. Stop working until the Environmental Branch has cleared the pit. *Immediately contact the* ***Cultural Resources Office - 767-3359/2010***
- No borrow pit may be expanded that is in the proximity of a protected cultural resource site or within the cantonment area.
Where applicable, adverse effects from audible elements (blasting), and visual elements are to be avoided near these sites so as not to diminish the integrity of the location, design, setting, materials, workmanship, or other structural details.

Fish and Wildlife Measures:
- Borrow pits or portions of the pits that are no longer suitable for further excavation for fill may be moved toward a final excavation phase that will produce a manageable fish pond.
- The following construction criteria shall strive to be incorporated during excavation for this purpose:
    1. A water depth of 3 to 8 feet
    2. An area of 3 to 10 acres
    3. *All edges sloped at 4:1, with a 5:1 entrance/exit point for gopher tortoise escape, to be converted to a boat ramp upon pond completion.*
    4. Earthen piers may be left within the excavated pond
    5. Soil and erosion controls to stabilize slope and pond margins with appropriate ground cover plants
    6. Borrow pit/pond shall be free of hazards including pilings, poles, abandoned equipment, etc.

Endangered/Protected Species Measures:
- If the borrow pit you are proposing to use is near a protected species, another borrow pit of the same type of material which is near your final destination will be assigned for your use.
- If threatened or endangered species are encountered during excavation of this borrow pit, all work is to be discontinued, and *immediately contact the* ***Fish & Wildlife Office at 767-7263/2584***.

Wetlands Measures:
- Maintain a minimum distance of 50 feet from borrow pit banks to wetlands delineation (footprints).

Solid/Hazardous Waste Measures:
- All solid and hazardous wastes shall be disposed of properly.
- No debris will be left at, in, or around the borrow pit.

Air Quality Measures:
- Where applicable, adverse effects from atmospheric elements, specifically fugitive dust, are to be prevented so as to avoid any significant deterioration of the air quality.

**** If the borrow pit you are proposing to use has been moved into this final excavation phase or has already been converted into a fishpond, another borrow pit of the same type of material which is near your final destination will be assigned for your use. Also, seasonal conditions may be such as to merit utilization of another site to offset unsafe conditions. These sites will require coordination with your POC for utilization. If necessary, another borrow pit of the same material type that is near your final destination will be assigned for your use.***

** The following pass must be obtained from the Range Control Office* ***before entering*** *any Training Area.*

POV PASS FOR FORT STEWART ROADS AND TRAINING AREAS	
TO: Appropriate Range Guards and/or military police FROM: Chief Range Division, Fort Stewart Ga. 31314 (912) 767-877/8100	
The following individual(s) is/are authorized access to the following Training Area/Facilities beginning _____ thru _____ _____ (Start Date) (End Date)	
_____ Rank, Name (Last, First)	_____ Training Area(s) Facility
_____ Organization	_____ Phone Number

Reason for Access Pass

Vehicle (Model) Year (License Plate Number)
(State)

Statement of understanding

I understand that I am permitted to use only the above listed training area(s) and roads leading to and from that area. I may only use that area/facility for the date and time listed below. I understand that I am using these roads at my own risk, and the Commander, 3rd infantry Division and Fort Stewart Assume no responsibility for my safety.

Permanently off limit areas- High Risk Dud Area: Artillery Impact Area, Aerial Gunnery Ranges 1-3 (AGR), EOD Area, Tank Gunnery Ranges (B9-16) and small arms impact area, Luzon Range. Abandoned Ranges located in C1 and C4 training areas.

CAUTION: DO NOT DISTURB UNEXPLODED AMMUNITION! Mark location and notify Range Control (912) 767-8777 or call the Military Police at 911.

I have been briefed and understand the OFF-LIMITS areas and the limitations of this pass. I will notify Range Control at 767-8777 prior to entering an area and upon departure.

_____ _____
Chief, Range Division Bearer's Signature

POST ON DASHBOARD OF VEHICLE

APPENDIX A

REFERENCES

APPENDIX A

REFERENCES

Note: Design Build Team will be responsible to check all current up to date issues of all references that conforms with the project.

GOVERNMENT PUBLICATIONS

CODE OF FEDERAL REGULATIONS
Government Printing Office
Washington, DC 20402

49 CFR 192	Transportation of Natural and other Gas by Pipeline: Minimum Federal Safety Standards
40 CFR 280	Owners and Operators of Underground Storage Tanks
49 CFR 195	Transportation of Hazardous Liquids by Pipeline
10 CFR 430	Energy Conservation Program for Consumer Products

Department of the Navy

Standardization Documents Order Desk
700 Robbins Avenue, Bldg. 4D
Philadelphia, PA 19111-5094

MIL-HDBK-1008	Fire Protection for Facilities Engineering, Design, and Construction

U.S. Government Printing Office

Superintendent of Documents
U.S. Government Printing Office
Washington, DC 20402

U.S. Government Printing Office (GPO) Style Manual

NON-GOVERNMENT PUBLICATIONS

AIR MOVEMENT AND CONTROL ASSOCIATION
30 W. University Drive
Arlington Heights, IL 60004-1893

AMCA 210	(1985) Laboratory Methods of Testing Fans for Rating

AIR CONDITIONING AND REFRIGERATION INSTITUTE
4301 North Fairfax Drive
Arlington, VA 22203

ARI 310/380	(1993) Packaged Terminal Air-Conditioners and Heat Pumps
ARI 440	(1998) Room Fan-Coil and Unit Ventilator
ARI 445	(1987; R 1993) Room Air-Induction Units

ARI 880 (1998) Air Terminals

AMERICAN ARCHITECTURAL MANUFACTURERS ASSOCIATION (AAMA)
1827 Walden Office Square, Suite 104
Schaumburg, IL 60173-4268

AAMA 101 Voluntary Specifications for Aluminum, Vinyl and Wood Windows and Glass Doors

AAMA 605 Voluntary Specification Performance Requirements and Test Procedures for High Performance Organic Coatings on Aluminum Extrusions and Panels

AAMA 607.1 Voluntary Guide Specifications and Inspection Methods for Clear Anodic Finishes for Architectural Aluminum

AAMA 1503 Voluntary Test Method for Thermal Transmittance and Condensation Resistance of Windows, Doors, and Glazed Wall Sections

AMERICAN BEARING MANUFACTURERS ASSOCIATION
1200 19th Street, NW
Washington, DC 20036-4303

AFBMA Std 9 (1990) Load Ratings and Fatigue Life for Ball Bearings

AFBMA Std 11 (1990) Load Ratings and Fatigue Life for Roller Bearings

AMERICAN BOILER MANUFACTURERS ASSOCIATION (ABMA)
950 N. Glebe Rd, Suite 160
Arlington, VA 22203-1824

ABMA ISEI Industry Standards and Engineering Information

ACI INTERNATIONAL (ACI)
P.O. Box 9094 Farmington Hills, MI 48333-9094
Ph: 248-848-3800
Fax: 248-848-3801
Internet: http://www.aci-int.org

ACI 318-95 Building Code Requirements for Reinforced Concrete

ACI 302 Guide for Concrete Floors and Slab Construction

ACI-ASCE 530 Building Code for Masonry

ACI-ASCE 530.1 Masonry Specifications

AMERICAN NATIONAL STANDARDS INSTITUTE
11 West 42 Street
New York, NY 10036

ANSI B16.5 Pipe Flanges and Flanged Fittings

ANSI Z21.10.1 (1993; Z21.10.1a; Z21.10.1b; Z21.10.1c) Gas Water Heaters Vol. I, Storage Water Heaters with Input Ratings of 75,000 Btu Per Hour or Less

ANSI Z124. (1995) American National Standard for Plastic Lavatories.

ANSI Z124.6 (1997) Plastic Sinks

ANSI Z21.45 (1995) Flexible Connectors of Other Than All-Metal Construction for Gas Appliances

ANSI C2 (1997) National Electrical Safety Code

ANSI 70 (1996) National Electrical Code

ANSI/TIA/EIA-569-A (1998) Commercial Building Standard for Telecommunications Pathways and Spaces

AMERICAN SOCIETY OF CIVIL ENGINEERS (ASCE)
1801 Alexander Bell Drive
Reston, VA 20190-4400
Ph: 800-548-2723
Fax: 703-295-6333
Internet: www.pubs.asce.org
e-mail: marketing@asce.org

ASCE 7 (1995) Minimum Design Loads for Buildings and Other Structures

AMERICAN SOCIETY FOR TESTING AND MATERIALS
100 Bar Harbor Drive
West Conshohocken, PA 19428-2959

ASTM E 84 (2000) Surface Burning Characteristics of Building Materials

ASTM D 2846/D 2846M (1999) Chlorinated Poly(Vinyl Chloride) (CPVC) Plastic Hot- and Cold-Water Distribution Systems

ASTM D 2513 (1999; Rev. A) Thermoplastic Gas Pressure Pipe, Tubing, and Fittings

ASTM D 2683 (1998) Socket-Type Polyethylene Fittings for Outside Diameter-Controlled Polyethylene Pipe and Tubing

ASMT D 3350 (1999) Polyethylene Plastics Pipe and Fittings Materials

ASTM A 53 (1999) Pipe, Steel, Black and Hot-Dipped, Zinc-Coated Welded and Seamless

ASTM A 106 (1999) Seamless Carbon Steel Pipe for High-Temperature Service

ASTM B 88 (1999) Seamless Copper Water Tube

ASTM D 5686	(1995) "Fiberglass" (Glass-Fiber-Reinforced Thermosetting-Resin) Pipe and Pipe Fittings, Adhesive Bonded Joint Type Epoxy Resin, for Condensate Return Lines
ASTM D 2241	(1996b) Poly(Vinyl Chloride) (PVC) Pressure-Rated-Pipe (SDR Series)
ASTM D 1784	(1999a) Rigid Poly(Vinyl Chloride) (PVC) Compounds and Chlorinated Poly(Vinyl Chloride) (CPVC) Compounds
ASTM D 1248	(1998) Polyethylene Plastics Molding and Extrusion Materials
ASTM C 591	(1994) Unfaced Preformed Rigid Cellular Polyisocyanurate Thermal Insulation
ASTM C 518	(1998)Steady-State Heat Flux Measurements and Thermal Transmission Properties by Means of the Heat Flow Meter Apparatus
ASTM A 134	(1996) Pipe, Steel, Electric-Fusion (Arc)-Welded (Sizes NPS 16 and Over)
ASTM A 135	(1997c) Electric-Resistance-Welded Steel Pipe
ASTM A 139	(1996el) Electric-Fusion (Arc)-Welded Steel Pipe (NPS 4 and over)
ASTM A 36/A 36M	(2000) Carbon Structural Steel
ASTM D 2310	(1997) Machine-Made "Fiberglass" (Glass-Fiber-Reinforced Thermosetting-Resin) Pipe
ASTM D 2996	(1996; Rev. A) Filament-Wound "Fiberglass" (Glass-Fiber-Reinforced Thermosetting Resin) Pipe
ASTM C 136	(1995a) Sieve Analysis of Fine and Coarse Aggregates
ASTM D 422	(1963; R 1990) Particle-Size Analysis of Soils
ASTM D 1556	(1990) Density of Soil in Place by the Sand-Cone Method
ASTM D 1557	(1991) Laboratory Compaction Characteristics of Soil Using Modified Effort (56,000 ft-lbf/ft3 (2,700 kN-m/m3))
ASTM D 2216	(1992), Laboratory Determination of Water (Moisture) Content of Soil, and Rock
ASTM D 2487	(1990) Classification of Soils for Engineering Purposes
ASTM D 2661	(1991) Acrylonitrile-Butadiene-Styrene (ABS) Plastic Drain, Waste, and Vent Pipe and Fittings
ASTM D 2665	(Rev. B-91) Poly(Vinyl Chloride) (PVC) Plastic Drains, Waste, and Vent Pipe and Fittings
ASTM D 2666	Polybutylene (PB) Plastic Tubing (1989)

ASTM D 4318 (1993) Liquid Limit, Plastic Limit, and Plasticity Index of Soils

ASTM E 119 (1988) Standard Test Methods and Fire Tests of Building Construction and Materials

ASTM E 779 (E1-87) Standard Test Method for Determining Air Leakage Rate by Fan Pressurization

AMERICAN SOCIETY OF HEATING, REFRIGERATING AND AIR CONDITIONING ENGINEERS
1791 Tully Circle. NE
Atlanta, GA 30329-2305

Standard 62 (1999) Ventilation for Acceptable Indoor Air Quality

Standard 15 (1994) Safety Code for Mechanical Refrigeration

ASHRAE 90.1 (1989; 90.1b; 90.1c; 90.1d; 90.1e; 90.1g; 90.1i 90.11-1995; 90.1m-1995; 90.1n-1997) Energy Efficient Design of New Buildings Except Low-Rise Residential Buildings

ASHRAE Hdbk-IP (1997) Handbook, Fundamentals I-P Edition

AMERICAN SOCIETY OF MECHANICAL ENGINEERS INTERNATIONAL
Three Park Place
New York, NY 10016-5990

ASME B31.8 (1995) Gas Transmission and Distribution Piping Systems

ASME B16.11 (1996) Forged Fittings, Socket-Welding and Threaded

ASME B31.1 (1998; Addenda 1999 and 2000) Power Piping

ASME BPVC SEC VII (1995; Addenda 1995, 1996, and 1997) Boiler and Pressure Vessel Code: Section VII Recommended Guidelines for the Care of Power Boilers

ASME (1996) Pipe Flanges and Flanged Fittings NPS 1/2 Through NPS 24

ARCHITECTURAL WOODWORK INSTITUTE
1952 Isaac Newton Square W.
Reston, VA 20190

AWI Quality Standards (1999) 7th Edition, Version 1.2

ASSOCIATED AIR BALANCE COUNCIL
1518 K Street NW, Suite 708
Washington, DC 20005

AABC MN-1 (1989) National Standards for Testing and Balancing Heating, Ventilating, and Air Conditioning Systems

COUNCIL OF AMERICAN BUILDING OFFICIALS
5203 Leesburg Pike, Suite 708
Falls Church, VA 22041

CABO A117.1 (1992; Errata Jun 1993) Accessible and Usable Buildings and Facilities

ELECTRONIC INDUSTRIES ASSOCIATION (EIA)
2500 Wilson Blvd
Arlington, VA 22201-3834

EIA/TIA 568-B (2001) Commercial Building Telecommunications Cabling Standards

EIA/TIA 569-A (2001, amendment 5) Commercial Building Standard for Telecommunications Pathways and Spaces

ILLUMINATING ENGINEERING SOCIETY OF NORTH AMERICA
120 Wall Street, 17th Floor
New York, NY 10005-4001

IESNA RP-8 (1983; R 1993) Roadway Lighting

IES LHBK (1993) Lighting Handbook, Reference and Application

INSTITUTE OF ELECTRICAL AND ELECTRONICS ENGINEERS INC. (IEEE)
445 Hoes Lane, P.O. Box 1331
Piscataway, NJ 08855-1331

Standard for Use of the International System of Units (SI):
the Modern Metric System
International Approval Services (IAS)
8501 E. Pleasant Valley Rd
Cleveland, OH 44131

IAS Directory (1999) IAS Directory of AGA & CGA Certified Appliances and Accessories

INTERNATIONAL ASSOCIATION OF PLUMBING AND MECHANICAL OFFICIALS
20001 Walnut Drive South
Walnut, CA 91789-2825

IAPMO Z124.1 (1995) Plastic Bathtub Units

IAPMO Z124.3 (1995) Plastic Lavatories

IAPMO Z124.5 (1997) Plastic Toilet (Water Closets) Seats

IAPMO Z124.9 (1994) Plastic Urinal Fixtures

UNIFIED FACILITIES CRITERIA

UFC 1-200-01 31 JULY 2002 DESIGN: GENERAL BUILDING REQUIREMENTS

UFC 4-010-01 31 JULY 2002 DoD Minimum Antiterrorism Standards for Buildings.

INTERNATIONAL CODE COUNCIL, INC
5203 Leesburg Pike, Suite 708

Falls Church, VA 22041-3401

ICC (2000) International Building Code

INTERNATIONAL CONFERENCE OF BUILDING OFFICIALS
5360 Workman Mill Road
Whittier, CA 90601-2298

ICBO (1997) Uniform Building Code

NATIONAL ASSOCIATION OF CORROSION ENGINEERS INTERNATIONAL
1440 South Creek Drive
Houston, TX 77084-4906

NACE RP0169 (1996) Control of External Corrosion on Underground or Submerged Metallic Piping Systems

NACE RP0185 (1996) Extruded, Polyolefin Resin Coating Systems with Soft Adhesives for Underground or Submerged Pipe

NATIONAL ASSOCIATION OF PLUMBING - HEATING – COOLING CONTRACTORS
180 S. Washington Street
Falls Church, VA 22046

NAPHCC Plumbing Code (1996) National Standard Plumbing Code

NATIONAL ELECTRICAL MANUFACTURERS ASSOCIATION
1300 N 17th Street, Suite 1847
Rosslyn, VA 22209

NEMA C12.1 (1995) Code for Electricity Metering

NEMA LD 3 High Pressure Decorative Laminates

NEMA PB 1 (1995) Panelboards

NATIONAL ENVIRONMENTAL BALANCING BUREAU
8575 Grovemont Circle
Gaithersburg, MD 20877-4121

NEBB Procedural Stds (1991) Procedural Standards for Testing Adjusting Balancing of Environmental Systems

NATIONAL FIRE PROTECTION ASSOCIATION
One Batterymarch Park
Quincy, MA 02269-9101

NFPA 10 (1998) Standard for Portable Fire Extinguishers

NFPA 30 (2000) Flammable and Combustible Liquids Code

NFPA 31 (1997; TIA 97-11) Installation of Oil Burning Equipment

NFPA 54 (1999) National Fuel Gas Code

NFPA 58 (1998; Errata 58-98-1) Liquefied Petroleum Gas Code

NFPA 70 (2002) National Electrical Code (NEC)

NFPA 80 (1999) Standard for Fire Doors and Fire Windows

NFPA 90A (1993) Installation of Air Conditioning and Ventilating Systems

NFPA 101 (1997; Errata 97-1) Life Safety Code

NFPA 1581 (2000) Standard on Fire Department Infection Control Program

NFPA 1710 (2001) Organization and Development of Fire Suppression Operations, Emergency Medical Operations, and Special Operations to the Public by Career Fire Departments

PLUMBING AND DRAINAGE INSTITUTE
45 Bristol Drive, Suite 101
South Easton, MA 02375

PDI G 101 (1996) Testing and Rating Procedure for Grease Interceptors with Appendix of Sizing and Installation Data

PDI WH201 (1992) Water Hammer Arrestors

PDI WH 201 (1992) Water Hammer Arresters

SHEET METAL AND AIR CONDITIONING CONTRACTOR'S NATIONAL ASSOCIATION
PO Box 221230
Chantilly, VA 20153-1230

SMACNA HVAC Duct Const Stds (1995; Addenda Nov 1997)) HVAC Duct Construction Standards - Metal and Flexible

SMACNA Arch. Manual (1993; Errata; Addenda Oct 1997) Architectural Sheet Metal Manual

STEEL DOOR INSTITUTE (SDI)
30200 Detroit Road
Cleveland, OH 44145-1967

ANSI A250.8/SDI 100 Standard Steel Doors and Frames

AMERICANS WITH DISABILITIES ACT (ADA)

Accessibility Guidelines for Buildings and Facilities

Available from US Architectural and Transportation Barriers Compliance Board, 1111 18th Street, N.W., Suite 501, Washington, DC 20036-3894, (202) 653-7834 v/TDD or (202) 653-7863 FAX

AMERICAN ASSOCIATION OF STATE HIGHWAY AND TRANSPORTATION OFFICIALS (AASHTO)
444 N. Capital St., NW, Suite 249
Washington, DC 20001
Ph: 800-231-3475
Fax: 800-525-5562
Internet: www.aashto.org

ARMY TECHNICAL INSTRUCTIONS (TI)

Internet: http://www.hnd.usace.army.mil/techinfo/

TI 800-01	Design Criteria
TI 804-01	Area Planning, Site Planning and Design
TI 804-11	POV Site Circulation and Parking
TI 809-01	Load Assumptions for Buildings
TI 809-02	Structural Design Criteria for Buildings
TI 809-04	Seismic Design for Buildings
TI 809-04	Seismic Design For Buildings
TI 809-07	Design of Cold-Formed Load Bearing Steel Systems
TI 809-30	Metal Building Systems
TI 810-10	Mechanical Design Heating, Ventilating, and Air Conditioning
TI 810-11	Heating, Ventilating and Air Conditioning (HVAC) Control System
TI 814-01	Water Supply
TI 814-03	Water Distribution
TI 814-10	Wastewater Collection
TI 822-20	Surface Drainage Quad-Service Antiterrorism/Force Protection Construction Standard

ARMY/AIR FORCE TECHNICAL MANUAL ™
Internet: http://www.hnd.usace.army.mil/techinfo/engpubs.htm

TM 5-803-5	Installation Design
TM 5-803-13	Landscape Design and Planting Criteria
TM 5-803-13	Site Planning and Design
TM 5-822-2	General Provisions and Geometric Design for Roads, Streets, Walks and Open Storage Areas
TM 5-822-5	Pavement Design for Roads, Streets, Walks and Open Storage

	Areas
TM 5-822-7	Standard Practice for Concrete Pavements
TM 5-822-8	Bituminous Pavements – Standard Practice
TM 5-809-12	Concrete Floor Slabs on Grade Subjected to Heavy Loads
TM 5-813-4	Water Supply, Water Storage
TM 5-822-5	Pavement Design for Roads, Streets, Walks, and Open Storage Areas
TM 5-822-7	Standard Practice for Concrete Pavements
TM 5-822-8	Bituminous Pavements Standard Practice
TM 5-822-13	Pavement Design for Roads, Streets, and Open Storage Areas, Elastic Layered Method
TM 5-811-7	Electrical Design, Cathodic Protection

ARMY/COE MILITARY HANDBOOKS
Internet: http://www.hnd.usace.army.mil/techinfo/engpubs.htm

MIL-HDBK-1190	Sept. 1987, Facility Planning and Design Guide
MIL-HDBK-1008C	Fire Protection for Facilities Engineering, Design, and Construction, 1997
MIL-HDBK-1013-10	Design Guidelines for Security Fences, Gates, Barriers and Guard Facilities
ARMY REG 190-11	Physical Security of Arms, Ammunition and Explosives

ENGINEER TECHNICAL LETTER (ETL), MANUAL (EM) AND REGULATIONS (ER)

EM 1110-2-3102	General Principals of Pumping Station Design and Layout
ETL 91-6	Cathodic Protection
ETL 1110-3-466	Selection and Design of Oil/Water Separators at Army Facilities
ETL 1110-3-474	Cathodic Protection
ETL 1110-3-491	Sustainable Design for Military Facilities
ETL 1110-9-10	Cathodic Protection System Using Ceramic Anodes
ER 1110-3-110	Information Systems Design in Support of Military Construction

AMERICAN INSTITUTE OF TIMBER CONSTRUCTION (AITC)

Timber Construction Manual

AMERICAN INSTITUTE OF STEEL CONSTRUCTION (AISC)

American Institute of Steel Construction (AISC), Manual of Steel Construction

AMERICAN WATER WORKS ASSOCIATION (AWWA)

AWWA C500 (1986) Gate Valves for Water and Sewerage Systems (DOD adopted)

AWWA C502 (1985) Dry-Barrel Fire Hydrants

AMERICAN WELDING SOCIETY (AWS)

ENVIRONMENTAL PROTECTION AGENCY (EPA)

EPA 340/1-90-018 (1990) Asbestos/NESHAP Regulated Asbestos Containing Materials Guidance

EPA 340/1-90-019 (1990) Asbestos/NESHAP Adequately Wet Guidance

EPA 560/5-85-024 (1985) Guidance for Controlling Asbestos Containing Materials in Buildings

FACTORY MUTUAL SYSTEM (FM) STANDARDS

FEDERAL STANDARD SPECIFICATIONS (FS)

FED-STD 595 (Rev B) Colors

FS WW-P-541 Plumbing Fixtures

FS WW-P-541/5 Plumbing Fixtures (Sinks, Kitchens, Service, Laundry Trays - Detail Specification)

INTERNATIONAL CONFERENCE OF BUILDING OFFICIALS

ILLUMINATING ENGINEERING SOCIETY (IES)

LIGHTING HANDBOOK REFERENCE AND APPLICATION, 9TH EDITION

INSTITUTE OF ELECTRICAL AND ELECTRONIC ENGINEERS (IEEE)

IEEE STD 144 IEEE Recommended Practice for Grounding of Industrial and Commercial Power Systems

INTERNATIONAL PLUMBING CODE

NATIONAL ASSOCIATION OF ARCHITECTURAL METAL MANUFACTURERS (NAAMM)

NAAMM-01 (1988) Metal Finishes Manual for Architectural and Metal Products

NATIONAL ASSOCIATION OF CORROSION ENGINEERS (NACE)

NACE RP0169 Control of External Corrosion and Underground or Submerged Metallic

NATIONAL CONCRETE MASONRY ASSOCIATION (NCMA)

Specifications for the Design and Construction of Load Bearing Concrete Masonry

Building Code Requirements for Concrete Masonry (ACI-ASCE 530 Building Code for Masonry; ACI-ASCE 530.1 Masonry Specifications)

NATIONAL ELECTRICAL MANUFACTURER'S ASSOCIATION (NEMA)

NATIONAL ELECTRICAL SAFETY CODE (NESC)

NATIONAL FIRE PROTECTION ASSOCIATION CODES AND STANDARDS (NFPA)

National Fire Codes (NFC) Current as of 2001

NATIONAL FOREST PRODUCTS ASSOCIATION (NFPA)

NATIONAL DESIGN SPECIFICATION FOR WOOD CONSTRUCTION

OCCUPATIONAL SAFETY AND HEALTH ACT (OSHA)

29 CFR	Occupational Safety and Health Standards Part 1910
10 CFR 435B	Energy Conservation Performance Standards
29 CFR 1926	Safety and Health Regulations for Construction
40 CFR 61	National Emission Standards for Hazardous Air Pollutants
40 CFR 260	Hazardous Waste Management System General
40 CFR 261	Identification and Listing of Hazardous Waste

SAVANNAH DISTRICT DESIGN MANUAL

Design Manual for Military Construction, June 2000

SHEET METAL AND AIR CONDITIONING CONTRACTORS NATIONAL ASSOCIATION (SMACNA)

STEEL DECK INSTITUTE (SDI)

STEEL DECK INSTITUTE DIAPHRAGM DESIGN MANUAL (Latest Edition)

STEEL JOIST INSTITUTE

STANDARD PLUMBING CODE (SBCC)

Standard Specification for Load Table for Open Web Joists (latest edition)

UNIFORM BUILDING CODE (UBC) OF THE INTERNATIONAL CONFERENCE OF BUILDING OFFICIALS, 1997 Edition

UNDERWRITERS LABORATORIES STANDARDS (UL)

UNIFORM FEDERAL ACCESSIBILITY STANDARD (UFAS)

UNIFORM MECHANICAL CODE (UMC)

STATE REGULATIONS

Manual for Erosion and Sediment Control in Georgia (latest-edition)

BUILDERS HARDWARE MANUFACTURERS ASSOCIATION (BHMA)

BHMA A156.1 (1997) Butts and Hinges

BHMA A156.10 (1991) Power Operated Pedestrian Doors

BHMA A156.11 (1991) Cabinet Locks

BHMA A156.12 (1992) Interconnected Locks/Latches

BHMA A156.13 (1994) Mortise Locks & Latches

BHMA A156.14 (1997) Sliding and Folding Door Hardware

BHMA A156.15 (1995) Life Safety Closer/Holder Release Devices

BHMA A156.16 (1997) Auxiliary Hardware

BHMA A156.17 (1993) Self Closing Hinges & Pivots

BHMA A156.18 (1993) Materials and Finishes

BHMA A156.19 (1997) Power Assist and Low Energy Power Operated Doors

BHMA A156.2 (1996) Bored and Preassembled Locks and Latches

BHMA A156.20 (1996) Strap and Tee Hinges and Hasps

BHMA A156.21 (1996) Thresholds

BHMA A156.22 (1996) Door Gasketing Systems

BHMA A156.23 (1992) Electromagnetic Locks

BHMA A156.24 (1992) Delayed Egress Locks

BHMA A156.3 (1994) Exit Devices

BHMA A156.4 (1992) Door Controls - Closers

BHMA A156.5 (1992) Auxiliary Locks & Associated Products

BHMA A156.6 (1994) Architectural Door Trim

BHMA A156.7 (1997) Template Hinge Dimensions

BHMA A156.8 (1994) Door Controls - Overhead Stops and Holders

BHMA A156.9 (1994) Cabinet Hardware

BHMA Closer Directory (Effective thru Jul (1999) Directory of Certified

Door Closers

BHMA Exit Devices Directory (Effective thru Aug 1998) Directory of Certified Exit Devices

BHMA L & R Directory (Effective thru Jun 1999) Directory of Certified Locks & Latches

BHMA Directory (Effective thru Sep 1999) Directory of Electromagnetic & Delayed Egress Locks

APPENDIX B

FUNCTIONAL ROOM REQUIREMENTS

This building is a primary gathering building, in the event of a conflict, DOD Minimum Anti-terrorism Standards for building- Appendix "J" will govern over Appendix "B". ADA accessibility will be only required to 1st floor, Drill Hall, Lobby and Administrative Space 1st floor only.

Drill Hall, min 5648 sf net sq ft

1. Ceiling: 16 ft clear ceiling height (clear between structural members)
2. Finishes
   a. Floor: Concrete, sealed
   b. Walls: Painted CMU
   c. Ceiling: Exposed
3. 4 LAN and Telephone drops- (one at each wall)
4. 10 x12 roll up door to the exterior
5. Other Egress per fire code
6. Sound attenuating panels on walls above 10’ to ceiling)
7. Armory, ISMT, Supply open into drill hall
8. Heated & vented only; no air conditioning
9. Provide 4 Marker boards- min 4’ high by 10’ wide
10. Provide two drop type projection screens
11. Provide natural lighting, but NO skylights
12. HVAC zoned for part time use
13. Pull out fold up bleachers - 200 total seating (Built-in equipment) Bid Option #3
14. ADA Compliant

Classrooms- 40 person seating per room; min 591 sf each

1. Min 10’ ceiling height
2. Finishes
   a. Floor is sealed concrete
   b. Walls solid walls with sound insulation, painted GWB or (option: CMU walls)
   c. Ceiling solid or acoustical ceiling tiles
3. HVAC will be part time
4. Provide two (3) part marker boards per classroom
5. Provide mounting and cabling conduit for one ceiling-mounted projector
6. Provide one pull down projection screen per classroom
7. Provide power and LAN drops every 6’ along walls
8. Provide two telephone drops per classroom
9. Provide a retractable GWB Dividers (non-accordian) with STC of 45 or better between the two classrooms
10. Provide one cable TV outlet in each classroom
11. Tables & Chairs

Medical Office, 304 Min net sq ft

1. Typical Occupancy - 2 personnel
2. Ceiling min 9’ high
3. Finishes
   a. Floor- VCT or sealed, colored concrete
   b. Walls- painted CMU or GWB
   c. Ceiling- Acoustical Ceiling Tiles
4. Provide 3 shelves units, each 4’ wide, 8’ high and 2’ deep with 5 shelves per system Bid Option #4

5. Provide 1 electrical outlet per wall, plus an outlet for the Government furnished refrigerator
6. Provide lockable door
7. SID should include space for waiting area for up to six people
8. HVAC will be full time use
9. ADA Compliant

Medical exam room, min 152 net square feet

1. Ceilings 9’ min
2. Finishes:
3. Floor- sealed, colored concrete
4. Walls- Painted CMU or GWB
5. Ceiling- Acoustical Ceiling Tiles
6. No windows in exam room
7. Provide a stainless steel sink, with pedals for water control
8. Provide one electrical outlet per wall, plus an outlet for Government furnished refrigerator
9. HVAC will be full time user
10. Provide one door into medical office and one into corridor
11. Provide one phone and one LAN drop per wall
12. Provide a space for a medical refrigerator 36” high, 24” wide and 24” deep plus clearance to open door
13. Table and Built-in cabinet with glass doors
14. ADA Compliant

Medical Storage- min 120 net sf

1. Ceilings- min 9’
2. Finishes:
   a. Floor- Sealed, colored concrete
   b. Walls- CMU or GWB, painted
   c. Ceiling- Acoustical Ceiling Tile
3. Shelves- provide floor to ceiling adjustable shelving along one long and one short wall; shelving shall be provided for a maximum height between shelves of 15 inches Bid Option #4
4. Provide one LAN/telephone and electrical outlet
5. Provide lockable door
6. No windows
7. HVAC full time

Janitorial Space, min 31 net sf each

1. Ceilings- 9’ min
2. Finishes
3. Floor- Sealed concrete
4. Walls- Painted CMU or GWB
5. Ceiling- exposed or Acoustical Ceiling tile
6. Provide a mop sink and mop rack
7. HVAC required for mold and mildew control only; room is largely unoccupied
8. Provide heat and ventilation only; no A/C unless required for mold and mildew control
9. No phone or LAN outlets
10. Provide at least one electrical outlet

Toilet/Showers

A. Male, min 522 net sf

1. Provide showers for minimum of 25 men at a time
2. Provide water closets and lavatories per code
3. Ceiling- min 9’ high
4. Finishes:
   a. Floor- sealed, colored concrete
   b. Walls- CMU with epoxy paint
   c. Mold resistant GWB ceiling
5. Countertops to be solid surface material
6. Electrical- minimum of two outlets at each end of counter
7. HVAC will be full time

B. Female, min 347 net sf

1. Provide 3 showers stalls with changing areas
2. Provide water closets and lavatories per code
3. Ceiling- min 9’ high;
4. Finishes:
   a. Floor- sealed, colored concrete
   b. Walls- CMU with epoxy paint
   c. Mold resistant GWB ceiling
5. mold resistant GWB ceiling
6. Walls- CMU with epoxy paint finish
7. Floor- sealed, colored concrete
8. Countertops to be solid surface material
9. Electrical- minimum of two outlets at each end of counter
10. HVAC will be full time

<u>Single Toilet (1st Floor)</u>

A. Male, min 70 net sf

1. Provide water closets and lavatories per code
2. Ceiling- min 9’ high
3. Finishes:
   a. Floor- Ceramic tile
   b. Walls- Painted CMU, Chip resistant gypsum, Ceramic tile
   c. Acoustical ceiling system
4. Countertops to be solid surface material
5. Electrical- provide receptacle at each wall.
6. HVAC will be full time
7. ADA Compliant

B. Female, min 59 net sf

1. Provide water closets and lavatories per code
2. Ceiling- min 9’ high
3. Finishes:
   a. Floor- Ceramic tile
   b. Walls- Painted CMU, Chip resistant gypsum, Ceramic tile
   c. Acoustical ceiling system
4. Countertops to be solid surface material
5. Electrical- provide receptacle at each wall.
6. HVAC will be full time
7. ADA Compliant

Lounge, min 296 sf net

1. Maximum Occupancy: 15 people
2. Ceilings 9’ min
3. Finishes: Floor- VCT
4. Walls- CMU or GWB
5. Ceiling- Acoustical ceiling system
6. Electrical- Provide service to accommodate two vending machines along one wall and an outlet in each of the remaining walls
7. Provide one telephone drop
8. Provide one long base cabinet and wall unit with one outlet at each end of and above the countertop
9. Provide solid surface countertop on base cabinet
10. HVAC for full time use

Mechanical Spaces (Minimum 1225 sf net)

1. Unoccupied spaces
2. No HVAC required, except as required by code and/or for equipment operation
3. Provide one electrical outlet in addition to electrical service required for equipment
4. No access from building interior into Mechanical spaces
5. Configure room and equipment layout to provide for ease of testing, replacement, repair and maintenance
6. Provide one telephone outlet
7. Provide telephone and LAN drops as required for any system in the room, including DDC system
8. Ceiling- exposed
9. Floor- sealed concrete
10. Walls- painted CMU

Gen Administrative Spaces

Hallways

1. Ceilings- 9’ minimum
2. Finishes:
   a. Floor– VCT or sealed, colored concrete…
   b. Wall- Painted CMU, chip resistant gypsum, ceramic tile
   c. Ceiling type (exposed, acoustical drop etc)
3. HVAC for full time use
4. Provide receptacles every 50’ for cleaning purposes

Lobby

1. Ceiling-
   a. Floor type – VCT, ceramic or stone tile…
   b. Walls- Painted CMU, chip resistant gypsum or tile
   c. Ceiling type-GWB or acoustical tile
2. Provide a window between entry foyer and administrative spaces for entry control
3. HVAC for full time use
4. Lighting requirements
5. Provide receptacle on each wall.
6. ADA Compliant

Admin S-1, 585 minimum net square feet

1. Typical Occupancy: 5 personnel

2. Ceiling- 9’ minimum
3. Finishes:
   a. Floor- carpet
   b. Walls- Painted CMU or GWB
   c. Ceiling- acoustical ceiling tiles
4. Provide an issue port between this space and the adjacent corridor (not the foyer). Provide a lockable 12’ long roll-up window above a solid surface counter, 12’ wide, 30” deep. Recess the issue port area into an alcove to allow corridor traffic to pass unobstructed by those waiting at the issue window.
5. Provide a view window 4’ x 4’ into the entrance foyer
6. HVAC will be full time use per code for office occupancy
7. Provide two electrical outlets per wall, plus an electrical outlet at each end of the issue window
8. Provide two telephone outlets per wall, plus an outlet at each end of the issue window
9. Provide two LAN drops per wall, plus a drop at each end of the issue window
10. 5- 8'x8' modular cubicles
11. Space will contain the following when occupied (not in contract, for interior design use only):
    a. 5 personnel
    b. ID card area
    c. One printer
    d. Copy machine with storage cabinet adjacent
    e. Mailbox
    f. Postage machine
    g. Fax machine
    h. Scanner
    i. Miscellaneous storage cabinets
12. Provide lockable doors into corridors
13. HVAC full time
14. ADA Compliant

Admin Chief Office, min. 228 net sf

1. Two personnel occupy room; each will have a (Government furnished) minimum of a desk, credenza, chair, minimum of two filing cabinets, personal computer, telephone
2. Ceiling min 9’ high
3. Finishes
   a. Floor- Carpet
   b. Walls- painted CMU or GWB
   c. Ceiling- Acoustical Ceiling Tiles
4. Provide one electrical outlet on each short wall and two on each long wall
5. Provide one LAN drop on each of three walls and two drops on one long wall
6. Telephone system- same as LAN
7. HVAC will be full time use
8. ADA Compliant

Active Duty First Sergeant, min. 153 net sf

1. One personnel occupies room and will have a (Government furnished) minimum of a desk, credenza, chair, minimum of two filing cabinets, personal computer, telephone
2. Ceiling min 9’ high
3. Finishes
   a. Floor- Carpet
   b. Walls- painted CMU or GWB
   c. Ceiling- Acoustical Ceiling Tiles
4. Provide one electrical outlet on each wall
5. Provide one LAN drop on each wall
6. Telephone system- same as LAN
7. HVAC will be full time use
8. ADA Compliant

Inspector/Instructor, min. 153 net sf

1. One personnel occupies room and will have a (Government furnished) minimum of a desk, credenza, chair, minimum of two filing cabinets, personal computer, telephone
2. Ceiling min 9’ high
3. Finishes
   a. Floor- Carpet
   b. Walls- painted CMU or GWB
   c. Ceiling- Acoustical Ceiling Tiles
4. Provide one electrical outlet on each wall
5. Provide one LAN drop on each wall
6. Telephone system- same as LAN
7. HVAC will be full time use
8. ADA Compliant

S-3, min. 375 net sf

1. Four personnel occupy room; each will have a (Government Furnished) minimum of a desk, credenza, chair, minimum of two filing cabinets, personal computer, telephone
2. Ceiling min 9’ high
3. Finishes
   a. Floor- Carpet
   b. Walls- painted CMU or GWB
   c. Ceiling- Acoustical Ceiling Tiles
4. Provide one electrical outlet on each short wall and two on each long wall
5. Provide one LAN drop on each of three walls and two drops on one long wall
6. Telephone system- same as LAN
7. HVAC will be full time use
8. Provide 2 dry-erase marker boards
9. 4'0" x 2'0" x 8'0" high shelves Bid Option #4
10. ADA Compliant

S-4, min. 188 net sf

1. Two personnel occupy room; each will have a (Government Furnished) minimum of a desk, credenza, chair, minimum of two filing cabinets, personal computer, telephone
2. Ceiling min 9’ high
3. Finishes
   a. Floor- Carpet

   b. Walls- painted CMU or GWB
   c. Ceiling- Acoustical Ceiling Tiles
4. Provide one electrical outlet on each short wall and two on each long wall
5. Provide one LAN drop on each of three walls and two drops on one long wall
6. Telephone system- same as LAN
7. HVAC will be full time use
8. Provide 2 dry-erase marker boards
9. 4'0" x 2'0" x 8'0" high shelves Bid Option #4
10. ADA Compliant

TMO Office, min. 143 net sf

1. Two personnel occupy room; each will have a (Government Furnished) minimum of a desk, credenza, chair, minimum of two filing cabinets, personal computer, telephone
2. Ceiling min 9’ high
3. Finishes
   a. Floor- Carpet
   b. Walls- painted CMU or GWB
   c. Ceiling- Acoustical Ceiling Tiles
4. Provide one electrical outlet on each wall
5. Provide one LAN drop on each walls
6. Telephone system- same as LAN
7. HVAC will be full time use
8. Provide 2 dry-erase marker boards
9. ADA Compliant

Reserve Platoon, min 324 net sf

1. Four personnel occupy room; each will have a (Government Furnished) minimum of a desk, credenza, chair, minimum of two filing cabinets, personal computer, telephone
2. Ceiling min 9’ high
3. Finishes
   a. Floor- Carpet
   b. Walls- painted CMU or GWB
   c. Ceiling- Acoustical Ceiling Tiles
4. Provide one electrical outlet on each short wall and two on each long wall
5. Provide one LAN drop on each of three walls and two drops on one long wall
6. Telephone system- same as LAN
7. HVAC will be full time use
8. Provide 2 dry-erase marker boards I&I

PWST Office, min. 152 net square feet

1. Two personnel occupy room; each will have a (Government Furnished) minimum of a desk, credenza, chair, minimum of two filing cabinets, personal computer, telephone
2. Ceiling min 9’ high
3. Finishes
4. Floor- Carpet
5. Walls- painted CMU or GWB
6. Ceiling- Acoustical Ceiling Tiles

7. Provide one electrical outlet on each wall
8. Provide one LAN drop on each wall
9. Telephone system- same as LAN
10. HVAC will be part time use

Training Aids, min 111 net sf

1. One personnel occupies room and will have a (Government furnished) minimum of a desk, credenza, chair, minimum of two filing cabinets, personal computer, telephone
2. Ceiling min 9’ high
3. Finishes
   a. Floor- Carpet
   b. Walls- painted CMU or GWB
   c. Ceiling- Acoustical Ceiling Tiles
4. Provide one electrical outlet on each wall
5. Provide one LAN drop on each wall
6. Telephone system- same as LAN
7. HVAC will be part time use

Reserve First Sergeant, min. 111 net sf

1. One personnel occupies room and will have a (Government furnished) minimum of a desk, credenza, chair, minimum of two filing cabinets, personal computer, telephone
2. Ceiling min 9’ high
3. Finishes
   a. Floor- Carpet
   b. Walls- painted sound attenuating GWB
   c. Ceiling- Acoustical Ceiling Tiles
4. Provide one electrical outlet on each wall
5. Provide one LAN drop on each wall
6. Telephone system- same as LAN
7. HVAC will be part time use

Reserve CO, min 111 net sf

1. One personnel occupies room and will have a (Government furnished) minimum of a desk, credenza, chair, minimum of two filing cabinets, personal computer, telephone
2. Ceiling min 9’ high
3. Finishes
   a. Floor- Carpet
   b. Walls- painted sound attenuating GWB
   c. Ceiling- Acoustical Ceiling Tiles
4. Provide one electrical outlet on each wall
5. Provide one LAN drop on each wall
6. Telephone system- same as LAN
7. HVAC will be part time use

Reserve XO, min 100 net sf

1. One personnel occupies room and will have a (Government furnished) minimum of a desk, credenza, chair, minimum of two filing cabinets, personal computer, telephone
2. Ceiling min 9’ high
3. Finishes
   a. Floor- Carpet
   b. Walls- painted sound attenuating GWB

c. Ceiling- Acoustical Ceiling Tiles
4. Provide one electrical outlet on each wall
5. Provide one LAN drop on each wall
6. Telephone system- same as LAN
7. HVAC will be part time use

Conference Room, min 524 net sf

1. Up to twenty personnel may occupy this space and in addition to seating, this space will contain a (Government furnished) conference table, television, personal computers
2. Ceiling min 9’ high
3. Finishes
   a. Floor- Carpet
   b. Walls- painted sound attenuating GWB
   c. Ceiling- Acoustical Ceiling Tiles
4. Provide one electrical outlet on each short wall and two per each long wall, plus one adjacent to the TV mount and one floor outlet
5. Provide one LAN drop on each short wall and two per each long wall, plus one floor outlet
6. Telephone system- same as LAN
7. Cable TV- provide cable and conduit for television
8. HVAC will be full time use
9. Provide a ceiling mount for a projector
10. Provide a pull-down projector screen
11. Provide 1 three part dry erase board
12. Provide bracket for television mount near ceiling

Recruiting Office, min 204 net sf

1. One personnel occupies room and will have a (Government furnished) minimum of a desk, credenza, chair, minimum of two filing cabinets, personal computer, telephone
2. Ceiling min 9’ high
3. Finishes
   a. Floor- Carpet
   b. Walls- painted sound attenuating GWB
   c. Ceiling- Acoustical Ceiling Tiles
4. Provide one electrical outlet on each wall
5. Provide one LAN drop on each wall
6. Telephone system- same as LAN
7. HVAC will be full time use

ISMT Trainer, min 420 net sf

1. Typical Occupancy 10-15 Marines in combat gear
2. Ceiling Min 10’ high
3. Finishes:
   a. Floor- Sealed concrete
   b. Ceiling- Sound attenuating GWB, painted black
   c. Walls- Sound attenuating GWB, three walls painted black with black fabric acoustic panels, short wall at back of room with entrance door to be painted white
4. Provide ceiling mount for 200 lbs projector
5. HVAC for part time use
6. Provide auxiliary cooling due to gear worn by personnel
7. Provide double doors into corridor.

8. Provide one electrical outlet on each short wall, two outlets on each long wall and one in the ceiling for the projector.
9. Provide conduit for projector cable from projector mount to short, white wall
10. Provide one LAN drop on the short, white wall
11. Telephone system- same as LAN

Armory, min 800 net sf

1. Typical Occupancy 2 Personnel
2. Ceiling: min. 9’
3. Finishes
   a. Ceiling- Concrete, painted
   b. Floor- Sealed concrete
   c. Walls- CMU, painted
4. Build to conform with MIL- HDBK 1013/1A, most recent revision
5. Provide an issue point day gate
6. Provide conduit for intrusion detection system only; system to be provided by others and not in contract
7. Relocate equipment racks and secure to wall
8. Provide and install cyclone fencing in locations to be determined by user during design. Length not to exceed two times the length of the longest wall. Provide gates for entry into partitioned areas.
9. Provide full time HVAC; no other dehumidification required
10. Class 5 Security vault door that conforms to Federal Specification AA-D-00600.
11. Provide two electrical outlets on wall with door.
12. Provide two LAN drops on the wall with door
13. Telephone system- same as LAN

Comm. Maintenance, min 301 net sf

1. Occupancy- typically 2 personnel
2. Ceiling- min. 9’
3. Finishes:
   a. Ceiling- exposed
   b. Floors- sealed concrete
   c. Walls- CMU, painted
4. Provide space for two personnel each with desk, credenza, personal computer, filing cabinet
5. HVAC for full time use
6. Provide a space for a storage cabinet for lithium batteries, 4’ wide, 8’ high, 30” deep
7. nd type of radios
8. Provide one electrical outlet on each short wall, two outlets on each long wall.
9. Provide two LAN drops on each long wall and one on each short wall.
10. Telephone system- same as LAN.
11. Provide full time HVAC
12. book shelves 8'0" x 2'0"deep x 5'0" tall Bid Option #4

Locker Room

A. Male, min. 2539 net sf

1. Occupancy- max 75
2. Ceiling- min 9’

3. Finishes
   a. Ceiling- Mildew/Mold resistant GWB, painted
   b. Floor- Sealed concrete
   c. Walls- CMU, painted
4. Provide and install on raised platforms:
   a. (200) 36″ x 36″ x 36″ wire mesh lockers
   b. (16) 36″ x 36″ x 72″ lockers
5. HVAC- full time with exhaust as necessary to inhibit mold/mildew growth
6. Provide floor drain for wash down
7. Provide benches
8. No LAN or telephone required.
9. Provide electrical outlets per code, with a minimum of 1 per wall.

B. Female, min. 270 net sf

1. Occupancy- max 15
2. Ceiling- min 9′
3. Finishes
   a. Ceiling- Mildew/Mold resistant GWB, painted
   b. Floor- Sealed concrete
   c. Walls- CMU, painted
4. Provide and install on raised platforms:
   a. (24) 36″ x 36″ x 36″ wire mesh lockers
   b. (3) 36″ x 36″ x 72″ lockers
5. HVAC- full time with exhaust as necessary to inhibit mold/mildew growth
6. Provide floor drain for wash down
7. Provide benches
8. No LAN or telephone required.
9. Provide electrical outlets per code, with a minimum of 1 per wall.

Supply

Storage, min 3891 net square feet

1. Typical Occupancy 2 personnel
2. Ceiling: 16 ft clear ceiling height (clear between structural members)
3. Finishes
   a. Floor: Concrete, sealed
   b. Walls: Painted CMU
   c. Ceiling: Exposed
4. Provide 8'6" long, 4′ high issue point between supply storage and drill hall. Provide a 8'6" long by 30″ wide counter and a lockable, coiling rollup window above counter. Provide base cabinet below counter.
5. Provide electrical outlets at 20 on center along all walls. Provide electrical outlet at each end of issue point.
6. Provide two LAN drops, one at each end of issue point.
7. Provide telephone same as LAN
8. Provide cyclone fencing and gates to partition areas of Supply. Cyclone fencing required approximately two times the length of the longest wall.
9. Provide full time heating and ventilation as required for storage areas.

10. Provide a 12' x12' roll up door to the corridor wall
11. Provide other Egress per fire code
12. Provide a marker board- min 4’ high by 10’ wide
13. Provide natural lighting, but NO skylights
14. Design floor for fork lift operation

Office, min 380 net sf

1. Typical Occupancy 2 personnel
2. Ceiling: 9 ft clear ceiling height (clear between structural members)
3. Finishes
   a. Floor: Concrete, sealed
   b. Walls: Painted CMU
   c. Ceiling: provide concrete ceiling deck rated to 250 lbs live load. Ceiling finish shall be exposed deck plate.
4. Provide electrical outlets every 20’ on center along walls.
5. Provide one LAN drop.
6. Provide telephone same as LAN.
7. Provide full time heating and ventilation

NBC Storage, min. 300 net sf

1. Typical Occupancy 2 personnel
2. Ceiling: 16 ft clear ceiling height (clear between structural members)
3. Finishes
   a. Floor: Concrete, sealed
   b. Walls: Painted CMU
   c. Ceiling: Exposed
4. Provide one electrical outlet on each wall.
5. Provide one LAN drop.
6. Provide telephone same as LAN.
7. Provide full time HVAC.
8. Shelving for masks (Minimum 4)
9. One 10' long cabinet for suites.

NMCI (NAVY AND MARINE CORPS INTERNET)

Non-secure, min 188 net sf

1. Typical Occupancy 2 personnel
2. Ceiling- min 9’
3. Finishes
   a. Floor- sealed concrete
   b. Walls- CMU or GWB, painted
   c. Ceiling- acoustical ceiling tiles
4. Provide full time HVAC
5. Electrical- Provide one outlet per wall. Provide electrical panel per specifications. Provide transformer as required.
6. Provide one LAN drop per wall
7. Provide one telephone drop per wall
8. Provide door lock

Secure, min 188 net sf

1. Typical Occupancy 2 personnel
2. Ceiling- min 9’
3. Finishes

a. Floor- sealed concrete
b. Walls- CMU or GWB, painted
c. Ceiling- GWB, painted

4. Provide full time HVAC
5. Electrical- Provide one outlet per wall. Provide electrical panel per specifications. Provide transformer as required.
6. Provide one LAN drop per wall
7. Provide one telephone drop per wall
8. Provide door lock, cipher type

HST Storage, min 200 net sf

1. Typical Occupancy 2 personnel
2. Ceiling- exposed
3. Finishes
   a. Floor- sealed concrete
   b. Walls- CMU or GWB, painted
   c. Ceiling- exposed to ceiling deck
4. Electrical- Provide one outlet per wall.
5. Provide one LAN drop per wall
6. Provide one telephone drop per wall
7. Provide full time HVAC

VMF Maintenance Bays, min 1688 net sf

1. Typical Occupancy 5 personnel
2. Ceiling: 18 ft clear ceiling height (clear between structural members)
3. Finishes
   a. Floor: Concrete, sealed
   b. Walls: Painted CMU
   c. Ceiling: Exposed
4. Provide electrical outlets every 20’ on center along walls.
5. Provide one LAN drop.
6. Provide telephone same as LAN.
7. Provide full time heating and ventilation, no air conditioning
8. Provide 12’ wide by 14’ high insulated, electric, coiling overhead doors
9. Provide one 5-fluid “jiffy lube” type automatic or dispensing system accessible to both bays. Include storage of fluid tanks in maintenance bays. Bid Option #5
10. Provide compressed air system for operation of automatic fluid dispensing system. Provide an additional compressed air outlet per bay.
11. Lighting shall be angled to minimize shadowing while working on vehicle engines.

VMF, Tool Room, min 274 net sf

1. Typical Occupancy 2 personnel
2. Ceiling: min 9 ft clear ceiling height (clear between structural members)
3. Finishes
   a. Floor: Concrete, sealed
   b. Walls: Painted CMU to roof deck
   c. Ceiling: : provide concrete ceiling deck rated to 250 lbs live load. Ceiling finish shall be exposed deck plate.
4. Provide electrical outlets every 20’ on center along walls.

5. Provide one LAN drop.
6. Provide telephone same as LAN.
7. Provide full time heating and ventilation

VMF, Parts Room, min 184 net sf

1. Typical Occupancy 2 personnel
2. Ceiling: min 9 ft clear ceiling height (clear between structural members)
3. Finishes
   a. Floor: Concrete, sealed
   b. Walls: Painted CMU to roof deck
   c. Ceiling: : provide concrete ceiling deck rated to 250 lbs live load. Ceiling finish shall be exposed deck plate.
4. Provide electrical outlets every 20’ on center along walls.
5. Provide one LAN drop.
6. Provide telephone same as LAN.
7. Provide full time heating and ventilation

VMF, Battery Room, min 101 net sf

1. Typical Occupancy 1 person
2. Ceiling: 9 ft clear ceiling height (clear between structural members)
3. Finishes
   a. Floor: Concrete, sealed
   b. Walls: Painted CMU to roof deck
   c. Ceiling: : provide concrete ceiling deck rated to 250 lbs live load. Ceiling finish shall be exposed deck plate.
4. Provide electrical outlets every 20’ on center along walls.
5. Provide one LAN drop.
6. Provide telephone same as LAN.
7. Provide full time heating and ventilation.
8. Provide ventilation per code/ military requirements for a vehicle battery storage room. No charging occurs in this room.

VMF, Motor Transport Office, min 250 net sf

1. Typical Occupancy 2 personnel
2. Ceiling: 9 ft clear ceiling height (clear between structural members)
3. Finishes
   a. Floor: Concrete, sealed
   b. Walls: Painted CMU to roof deck
   c. Ceiling: : provide concrete ceiling deck rated to 250 lbs live load. Ceiling finish shall be exposed deck plate.
4. Provide an outlets on each wall.
5. Provide two LAN drops.
6. Provide telephone same as LAN.
7. Provide full time HVAC

VMF, Heavy Equipment Office, min 250 net sf

1. Typical Occupancy 2 personnel
2. Ceiling: 9 ft clear ceiling height (clear between structural members)
3. Finishes
   a. Floor: Concrete, sealed
   b. Walls: Painted CMU to roof deck

c. Ceiling: : provide concrete ceiling deck rated to 250 lbs live load. Ceiling finish shall be exposed deck plate..

4. Provide an outlets on each wall.
5. Provide two LAN drops.
6. Provide telephone same as LAN.
7. Provide full time HVAC

VMF, Publications Room, min 94 net sf

1. Typical Occupancy 1 personnel
2. Ceiling: 9 ft clear ceiling height (clear between structural members)
3. Finishes
   a. Floor: Concrete, sealed
   b. Walls: Painted CMU to roof deck
   c. Ceiling: : provide concrete ceiling deck rated to 250 lbs live load. Ceiling finish shall be exposed deck plate.
4. Provide an outlets on each wall.
5. Provide two LAN drops.
6. Provide telephone same as LAN.
7. Provide full time heating and ventilation

Cargo and Medium Pack Parachute Storage, min 558 net sf

1. Typical Occupancy 2 personnel
2. Ceiling: 10 clear ceiling height (clear between structural members)
3. Finishes
   a. Floor: Concrete, sealed
   b. Walls: Painted CMU to roof deck
   c. Ceiling: exposed
4. Provide an electrical outlet on each wall.
5. Provide two LAN drops.
6. Provide telephone same as LAN.
7. Provide full time HVAC with additional humidity control
8. Space shall be designed in accordance with requirements for a secure space, including lockable doors.
9. Provide metal racks to store at a height not to exceed 6’ for top rack:
   a. 30 Cargo Parachute packs @ 250 lbs each (each 2’W x 3’ H x 5’ D)
   b. 30 medium parachute packs @ 130 lbs each (each 2’W x 3’ H x 5’ D)
10. Design floor for forklift operation

Personnel Parachute and Small Cargo Parachute Pack Storage, min 579 net sf

1. Typical Occupancy 2 personnel
2. Ceiling: 10 clear ceiling height (clear between structural members)
3. Finishes
   a. Floor: Concrete, sealed
   b. Walls: Painted CMU to roof deck
   c. Ceiling: exposed
4. Provide an electrical outlet on each wall.
5. Provide two LAN drops.
6. Provide telephone same as LAN.

7. Provide full time HVAC with additional humidity control
8. Space shall be designed in accordance with requirements for a secure space, including lockable doors.
9. Provide metal racks to store at a height not to exceed 6′ for top rack:
   a. 60 small cargo packs @25 lbs each (each 2′ x 2′ x 2′D)
   b. 20 small cargo packs @ 10 lbs each (each 8″ x 8″ x 24″D)
   c. 80 personnel packs @ 25 lbs each (each 2′L x 14″W x 12″ D)
10. Provide hanger system for 80 Harnesses (12′ x 12″ x 12″)
11. Design floor for forklift operation.

Parachute Maintenance Shop, min 935 net sf

1. Min. width is 15′; minimum length is 60′
2. Typical Occupancy 20 personnel
3. Ceiling: 10 clear ceiling height (clear between structural members)
4. Finishes
   a. Floor: Concrete, sealed
   b. Walls: Painted CMU to roof deck
   c. Ceiling: exposed
5. Provide four electrical outlets on each of the two long walls in addition to outlets for 4 light tables and 6 sewing machines along those walls.
6. Provide three LAN drops total..
7. Provide telephone same as LAN.
8. Provide full time HVAC
9. Space shall be designed for:
   a. Four light tables, plus two extension tables totaling 48′ long parachute inspection area
   b. Six sewing machines (each 2′ x 4′ x 3′) with 4′ min between machines
   c. 6 built-in desk counter 42″ high,6′ wide, 30″ deep with LAN and telephone drops
10. Design space in accordance with requirements for a secure space, including lockable doors.
11. Design floor for forklift operation
12. Provide 100 foot candles (maintained) light levels
13. Metal shelving 15" deep x 6'0" wide x 8'0" high
14. Built-in desk counter 6'0" wide x 28" deep x 42" high

Parachute Pak Lines, min 1600 net sf

1. Minimum length is 52′
2. Typical Occupancy 2 personnel
3. Ceiling: 10' clear ceiling height (clear between structural members)
4. Finishes
   a. Floor: Concrete, sealed
   b. Walls: Painted CMU to roof deck
   c. Ceiling: exposed
5. Provide four electrical outlets on long walls; provide 2 outlet on short walls.
6. Provide one LAN drop.
7. Provide telephone same as LAN.
8. Provide part time heating and ventilation
9. Space shall be designed for:

a. Four packing lines of 6 tables, 3’ wide and 8’ long on each line(Gov't furnished)
b. Provide a minimum of 4’ between tables
c. Provide 100 ft candles (maintained) throughout

10. Design floor for forklift operation

Cargo Parachute Inspection and Packing, min 2167 net sf

1. Min. width is 20’; minimum length is 95’
2. Typical Occupancy 10 personnel
3. Ceiling: 22’ clear ceiling height (clear between structural members)
4. Finishes
   a. Floor: Concrete, sealed
   b. Walls: Painted CMU to roof deck
   c. Ceiling: exposed
5. Provide electrical outlets at 20’ on center along walls.
6. Provide floor outlets along center of length of space.
7. Provide one LAN drops total..
8. Provide telephone same as LAN.
9. Provide part time heating and ventilation
10. Provide 100 foot candles (maintained) light level throughout space.
11. Provide 12’ x 12’ electric coiling door to outside for extension of parachute by packers.

Miscellaneous Component Storage Area, min 698 net sf

1. Typical Occupancy 2 personnel
2. Ceiling: exposed (clear between structural members)
3. Finishes
   a. Floor: Concrete, sealed
   b. Walls: Wire mesh to underslab of roof
   c. Ceiling: exposed
4. Provide electrical outlets at 25’ on center each wall.
5. Provide one LAN drop.
6. Provide telephone same as LAN.
7. Provide full time heating and ventilation only.
8. Design floor for forklift operation

Delivery/Loading Area, min 247 net sf

1. Typical Occupancy 2 personnel
2. Ceiling: minimum as required for 20’ clear height between monorail hook and floor (clear between structural members from)
3. Finishes
   a. Floor: Concrete, sealed
   b. Walls: Painted CMU to roof deck
   c. Ceiling: exposed
4. Provide electrical outlets at 25’ on center each wall.
5. Provide one LAN drop.
6. Provide telephone same as LAN.
7. Provide full time heating and ventilation only.
8. Design floor for forklift operation
9. Provide 5 ton monorail with 20” clear to floor from bottom of hook.

10. Provide 12’ x 12’ roll-up door for loading packed pallets. Largest pallet will contain a HUMVEE.

Tool Storage, min 212 net sf

1. Typical Occupancy 1personnel
2. Ceiling: exposed
3. Finishes
   a. Floor: Concrete, sealed
   b. Walls: Wire mesh floor to underside of roof
   c. Ceiling: : exposed
4. Provide an electrical outlets on each wall.
5. Provide one LAN drop.
6. Provide telephone same as LAN.
7. Provide full time heating and ventilation
8. Provide pegboard on wall

Office, min 299 net sf

1. Typical Occupancy 2 personnel
2. Ceiling: 10 ft clear ceiling height (clear between structural members)
3. Finishes
   a. Floor: Concrete, sealed
   b. Walls: Painted CMU to roof deck
   c. Ceiling: acoustical ceiling tile.
4. Provide an outlet on each wall.
5. Provide two LAN drops.
6. Provide telephone same as LAN.
7. Provide full time HVAC
8. Provide 2 8'0" x 2'0" x 8'0" high shelves Bid Option #4

Tower, min 455 net sf

1. Ceiling- min 60’ clear (clear between structural members)
2. Typical Occupancy 6 personnel
3. Finishes
   a. Floor: Concrete, sealed
   b. Walls: Painted CMU to roof deck
   c. Ceiling: exposed
4. Provide an electrical outlet on each wall.
5. Provide one LAN drop.
6. Provide telephone same as LAN.
7. Provide part time heating and ventilation
8. Provide 3 4' x 4' stainless wash tubs
9. Provide drying system.
10. Provide motorized dampers for air supply
11. Provide propeller type exhaust fans
12. Provide hot water heating coils with guard screen

APPENDIX C

FIRE PROTECTION/LIFE SAFETY CODE ANALYSIS

APPENDIX C
FIRE PROTECTION/LIFE SAFETY CODE ANALYSIS

Note to Designer: This document is a preliminary analysis used for concept development. It does not contain all requirements and does not relieve the designer of complete code and criteria review, compliance and documentation responsibilities during proposal preparation and final design development.

References:
Military Handbook MIL HDBK 1008C, Fire Protection for Facilities Engineering, Design and Construction, 10 June 1997
Engineering Circular EC 1110-1-92, Classification of Type of Construction, 21 June 2000
Uniform Building Code, 1997
NFPA 101, Life Safety Code, 2000
NFPA 10, Standard for Portable Fire Extinguishers, 1998

BUILDING DESCRIPTION

Two Story Building, Approximately 40,628 Square feet

1. UBC Occupancy
BUSINESS- Group B(see section 304)
Conference/Administration Space
ASSEMBLY – Group A-2.1 (See Section 303.1.1)
Drill Hall Classrooms

FACTORY & INDUSTRIAL – Group F-1 (See Section 306.1)
Parachute Maintenance, Packing Lines and Storage

STORAGE – Group S-1 (See Section 311.1)
Supply room

STORAGE – Group S-3 (See Section 311.1)
Vehicle Maintenance Facility

2. NFPA 101 Occupancy
New Business – See Chapter 38
New Assembly – See Chapter 12
Industrial – See Chapter 40
New Storage – See Chapter 42

3. Construction Type (UBC Table 5-B): Type II one-hour
See Section 603 – Type II Buildings

4. Exterior Wall and Opening Protection (UBC Table 5-A)
Exterior Walls, bearing and non-bearing – 20’ +, non rated; openings-20’ + non rated. See UBC Table 5-A

5. Allowable Floor Area, UBC Table 5-B (See Section 505.3 Allowable Area Increase)

Use Group	Allowable Area	Allowable Stories	Area increase	Total Allowable Area
B	18,000 sf	4	100% increase	54,000 sf
A-2.1	13,500 sf	2	100% increase	27,000 sf
F-1	18,000 sf	4	100% increase	54,000 sf
S-1	18,000 sf	4	100% increase	54,000 sf
S-3	18,000 sf	4	100% increase	54,000 sf

Use Group	Actual Area	Actual Area/Total Allowable (See 504.3 must add up to under 1)
B	9,768 sf	.181
A-2.1	11,926 sf	.441
F-1	9,252 sf	.171
S-1	14,100 sf	.120
S-3	3,282 sf	.061
Total	40,628 sf	.974 > 1 (See Section 504.3 exception 1)

6. Automatic Sprinkler Systems (MIL HDBK 1008c 6.1.2a)
Buildings over 15,000 Square Feet must have automatic sprinkler system protection

7. FIRE PROTECTION REQUIREMENTS: REF. TABLE 6-A

Bearing Walls – Exterior	=	1 HR
Bearing Walls – Interior	=	1 HR
Non-Bearing Walls – Exterior	=	1 HR
Partitions – Permanent	=	0 HR (See Sec. 508)
Shaft Enclosures	=	1 HR
Floor/Ceilings	=	1 HR
Roof/Ceilings	=	1 HR
Stairways (See 603.4)	=	Noncombustible/1 HR enclosure

8. OCCUPANCY SEPARATIONS (TABLE 3B)

B / S-1	=	N
A-2.1 / S-3	=	3 HR
A-2.1 / S-1	=	1 HR
S-1 / F-1	=	N

9. OCCUPANT LOAD FOR EXIT CALCULATIONS: Refer to Table 10-A

First Floor

Use	Load Factor	Area	Occupant Load
Offices	100	3,548 sf	35
Assembly	15	5,636 sf	377
Storage	300	7,435 sf	25
Locker rooms	50	2,809 sf	56
Others	100	10,790 sf	95
Mechanical	300	642 sf	2
Manufacturing	200	4,569 sf	24
Total First floor			614

Second Floor

Use	Load Factor	Area	Occupant Load (Area / Load Factor)
Offices	100	1,388 sf	14
Classrooms	20	1,705 sf	85
Assembly	15	894 sf	59
Mechanical	300	575 sf	2
Others	100	1,921 sf	18
Total Second floor			159

10. EGRESS WIDTH PER PERSON SERVED. TABLE 10-B

First Floor Corridors

Occupant Load X 0.2 = Width
614 X 0.2 = 122.8″

Second Floor Corridors

Occupant Load X 0.2 = Width
159 X 0.2 = 31.8″
Provided Width – 66″

Stairs

Occupant Load X 0.3 = Width
159 X 0.3 = 47.7″
Provided Width - 96″

11. PANIC HARDWARE (NFPA 101, 12.2.2.2.3)
Required for each assemblies greater than 100 occupants.

12. MAXIMUM DEAD END (NFPA 101, TABLE A.7.6.1)
Business - 50 FT
Assembly - 20 FT
Industrial - 50 FT
Storage - None Required

13. MAXIMUM COMMON PATH OF TRAVEL (NFPA 101, TABLE A.7.6.1)
Business - 100 FT
Assembly - 75 FT
Industrial –100 FT
Storage - None Required

14. MAXIMUM TRAVEL DISTANCE (NFPA 101, TABLE A.7.6.1)
Business - 300 FT
Assembly – 200 FT
Industrial - 400 FT
Storage - None Required

15. CORRIDOR PROTECTION
Business – None Required (NFPA 101, A38.3.6.1 EXC 2)
Assembly – None Required (NFPA 101, 12.3.6 EXC 2)
Industrial – 1 hr (NFPA 101, 42.3.6)
Storage - None Required (NFPA 101, 42.3.6)

16. INTERIOR FINISHES (MIL HDBK 1008C 2.7.1)
Class A in Exit Passageways
Class A, B or C in all other areas.

17. TRAVEL DISTANCE TO FIRE EXTINGUISHER (NFPA 10
Maximum – 75 FT

18. CABINETS FOR PORTABLE FIRE EXTINGUISHERS
Cabinets for portable fire extinguishers will be provided in accordance with NFPA 10.

19. ALARM AND DETECTION SYST
A fire alarm / reporting system will be provided as required by MIL HDBK 1008C.

20. PROTECTION FROM HAZARDS (NFPA 101, 12.3.2.1.3)

Boiler rooms (if provided) – Fire resistive barrier of 1 hour or automatic extinguishing system.

Space Description

First Floor (net sq. ft.)

Administrative

S – 1	585
Admin Chief Office	228
Active 1st Sergeant	153
I & I	153
Medical Office	304
Medical Examination Room	152
Medical Storage	120
Comm. Maintenance	301
Comm. Batt. Storage	64
S - 3	375
S – 4	188
TMO	143
NMCI – Secure	188
NMCI – Unsecure	188
Toilet (Male)	70
Toilet (Female)	59
Electrical -1	137
Comm. Room – 1	80
Toilet / Showers ; Male	522
Toilet / Showers ; Female	347
Lockers (Male)	2,539
Lockers (Female)	270
Drill Hall	5,648
Janitorial Space	31
Mechanical - 1	361

Storage

Supply	3,891
Armory / Security Vault	800
HST Storage	200
Supply Office	380
NBC	300

Parachute Maintenance & Storage

Maintenance and Inspection	935
Packing Lines	1,600
Inspection and Packaging	2,167
Tower	455
Pallet Storage	247
Unisex Head	39
Tool Storage	212
Misc Storage	698
Cargo Packs / Medium Packs	558

Main Packs / Small Packs	579
Mechanical – 2	64

Vehicle Maintenance Facility

VMF Bay # 1	840
VMF Bay # 2	848
Motor T	250
PUBS	94
Unisex Head	76
Heavy Equipment	250
Parts	184
Tool Room	274
Battery Storage	101

Total First Floor	29,248

Circulation, Wall & Partition	4,897

First Floor Total: (GSM)	34,145

Second Floor (net sq. ft.)

Classrooms 1 & 2	1,182
Conference Room	524
Lounge	296
Recruiting	204
ISMT	420
Reserve Platoon	324
Training Aids	111
PWST	152
Reserve 1st Sergeant	111
Reserve CO	111
Reserve XO	111
Head (Male)	45
Head (Female)	77
Electrical	64
Mechanical Mezzanine – 800 sf	400
Comm. room	80

Total Second Floor	4,212

Circulation, Wall & Partition	2,271

Second Floor Total: (GSM)	6,483

GRAND TOTAL:	40,628

APPENDIX D

SUSTAINABLE PROJECT RATING TOOL (SPiRiT)

Sustainable Project Rating Tool (SPiRiT)

Version 1.4.1

U. S. Army Corps of Engineers
U. S. Army Assistant Chief of Staff for Installation Management

June 2002

U. S. Army Corps of Engineers Disclaimer

The contents of this document are not to be used for advertising, publication, or promotional purposes. Citation of trade names does not constitute an official endorsement or approval of the use of such commercial products. All product names and trademarks cited are the property of their respective owners.

The findings of this document are not to be construed as an official Department of the Army position unless so designated by other authorized documents. The U. S. Army Corps of Engineers does not guarantee, certify, or ensure performance of any products, systems, strategies, or technologies described in the Sustainable Project Rating Tool (SPiRiT).

U. S. Green Building Council Disclaimer

The LEED Green Building Reference Guide™ 2.0 is the second edition, support document for the LEED Green Building Rating System™. These LEED™ documents were developed by the U.S. Green Building Council, under contract number DE-FG36-97GO10268, for the U.S. Department of Energy, Energy Efficiency and Renewable Energy, Office of Building Technology, State, and Community Programs, and are intended for use by commercial building project stakeholders or project team members as a guide for green and sustainable design. They were prepared with the assistance and participation of representatives from many organizations. The views and opinions expressed represent general consensus and available information, but unanimous approval by all organizations is not implied. The views and opinions expressed also do not necessarily state or reflect those of the United States government.

Together, the LEED™ documents represent the U.S. Green Building Council's efforts to develop a standard that improves environmental and economic performance of commercial buildings using established and/or advanced industry principles, practices, materials and standards. They are subject to change from time to time in the future.

The U.S. Green Building Council authorizes you to view the LEED Green Building Reference Guide™ 2.0 for your individual use. In exchange for this authorization, you agree to retain all copyright and other proprietary notices contained in the original LEED Green Building Reference Guide™ 2.0. You also agree not to sell or modify the LEED Green Building Reference Guide™ 2.0 or to reproduce, display or distribute the LEED Green Building Reference Guide™ 2.0 in any way for any public or commercial purpose, including display on a web site or in a networked environment. Unauthorized use of the LEED Green Building Reference Guide™ 2.0 violates copyright, trademark, and other laws and is prohibited.

Please note that the text of the federal and state codes, regulations, voluntary standards, etc. reproduced in the LEED Green Building Reference Guide™ 2.0 is either used under license to the U.S. Green Building Council or, in some instances, is in the public domain. All other text, graphics, layout, and other elements of content contained in the LEED Green Building Reference Guide™ 2.0 are owned by the U.S. Green Building Council and are protected by copyright under both United States and foreign laws.

Also please note that none of the parties involved in the funding or creation of the LEED Green Building Reference Guide™ 2.0, including the U.S. Green Building Council, its members or the United States government make any warranty (express or implied) or assume any liability or responsibility, to you or any third parties for the accuracy, completeness or use of, or reliance on, any information contained in the LEED Green Building Reference Guide™ 2.0, or for any injuries, losses or damages (including, without limitation, equitable relief) arising out of such use or reliance.

As a condition of use, you covenant not to sue, and agree to waive and release the U.S. Green Building Council, its members and the United States government from any and all claims, demands and causes of action for any injuries, losses or damages (including, without limitation, equitable relief) that you may now or hereafter have a right to assert against such parties as a result of your use of, or reliance on, the LEED Green Building Reference Guide™ 2.0.

Copyright © 2000 by the U.S. Green Building Council. All rights reserved.

Content

NOTES iii

1.0 Sustainable Sites 1

- ❑ 1.R1 Erosion, Sedimentation and Water Quality Control
- ❑ 1.C1 Site Selection
- ❑ 1.C2 Installation/Base Redevelopment
- ❑ 1.C3 Brownfield Redevelopment
- ❑ 1.C4 Alternative Transportation
- ❑ 1.C5 Reduced Site Disturbance
- ❑ 1.C6 Stormwater Management
- ❑ 1.C7 Landscape and Exterior Design to Reduce Heat Islands
- ❑ 1.C8 Light Pollution Reduction
- ❑ 1.C9 Optimize Site Features
- ❑ 1.C10 Facility Impact
- ❑ 1.C11 Site Ecology

2.0 Water Efficiency 5

- ❑ 2.C1 Water Efficient Landscaping
- ❑ 2.C2 Innovative Wastewater Technologies
- ❑ 2.C3 Water Use Reduction

3.0 Energy and Atmosphere 6

- ❑ 3.R1 Fundamental Building Systems Commissioning
- ❑ 3.R2 Minimum Energy Performance
- ❑ 3.R3 CFC Reduction In HVAC&R Equipment
- ❑ 3.C1 Optimize Energy Performance
- ❑ 3.C2 Renewable Energy
- ❑ 3.C3 Additional Commissioning
- ❑ 3.C4 <<Deleted>>
- ❑ 3.C5 Measurement and Verification
- ❑ 3.C6 Green Power
- ❑ 3.C7 Distributed Generation

4.0 Materials and Resources 10

- ❑ 4.R1 Storage & Collection of Recyclables
- ❑ 4.C1 Building Reuse
- ❑ 4.C2 Construction Waste Management
- ❑ 4.C3 Resource Reuse
- ❑ 4.C4 Recycled Content
- ❑ 4.C5 Local/Regional Materials
- ❑ 4.C6 Rapidly Renewable Materials
- ❑ 4.C7 Certified Wood

5.0 Indoor Environmental Quality (IEQ) 13

- ❑ 5.R1 Minimum IAQ Performance
- ❑ 5.R2 Environmental Tobacco Smoke (ETS) Control
- ❑ 5.C1 IAQ Monitoring
- ❑ 5.C2 Increase Ventilation Effectiveness
- ❑ 5.C3 Construction IAQ Management Plan
- ❑ 5.C4 Low-Emitting Materials
- ❑ 5.C5 Indoor Chemical and Pollutant Source Control
- ❑ 5.C6 Controllability of Systems
- ❑ 5.C7 Thermal Comfort
- ❑ 5.C8 Daylight and Views
- ❑ 5.C9 Acoustic Environment /Noise Control
- ❑ 5.C10 Facility In-Use IAQ Management Plan

6.0 Facility Delivery Process 17

- ❑ 6.C1 Holistic Delivery of Facility

7.0 Current Mission 18

- ❑ 7.C1 Operation and Maintenance
- ❑ 7.C2 Soldier and Workforce Productivity and Retention

8.0 Future Missions 19

- ❑ 8.C1 Functional Life of Facility and Supporting Systems
- ❑ 8.C2 Adaptation, Renewal and Future Uses

Facility Points Summary 20

SPiRiT Comment Sheet 22

NOTES

1) This Sustainable Project Rating Tool (SPiRiT) is derived from The U. S. Green Building Council LEED 2.0 (Leadership in Energy and Environmental Design) Green Building Rating System ™.

2) The SPiRiT numbering scheme parallels, but does not match LEED 2.0. LEED does not number major sections, which it calls 'Credit Categories,' ex. 'Sustainable Sites,' rather it numbers criteria or 'credits' within each major section. SPiRiT credit numbers match those of LEED where there is a 1:1 comparison. Where additional credits have been added they fall at the end of major sections.

3) The SPiRiT Credits all follow the format: Intent, Requirement and Technologies/Strategies.

Intent: A statement of the primary goal for the credit;
Requirement: Quantifiable conditions necessary to achieve stated intent;
Technologies/Strategies: Suggested technologies, strategies and referenced guidance on the means to achieve identified requirements.

4) Projects are evaluated for each SPiRiT credit which are either 'Prerequisites' or result in a point score:

Prerequisites: These credits are a statement of minimum requirements and must be met. No further points will be awarded unless the minimum is achieved. These credits are recognizable by an 'R' in the number scheme, ex. 1.R1, and a 'Reqd.' in the score column.
Point Score: These credits are evaluated and result in a point score. Where the potential score is greater than 1, no partial points are granted.

5) SPiRiT Sustainable Project Certification Levels:

SPiRiT Bronze	25 to 34 Points
SPiRiT Silver	35 to 49 Points
SPiRiT Gold	50 to 74 Points
SPiRiT Platinum	75 to 100 Points

6) SPiRiT credits have been developed to address facility life cycle phases including programming, design, construction, and commissioning. Additional rating tools will be developed to address installation/base master planning and facilities operations and maintenance, rehabilitation, recycling, and disposal.

7) POC for U. S. Army Corps of Engineers:

Mr. Harry Goradia
U. S. Army Corps of Engineers
ATTN: CEMP-ET
441 G Street NW
Washington, DC 20314
Phone (202) 761-7170, FAX (202) 761-0633
Email harry.goradia@hq02.usace.army.mil

POC for U. S. Army Installations:

Mr. John Scharl
U. S. Army Assistant Chief of Staff for Installation Management, Directorate of Facilities & Housing
ATTN: DAIM-FDF
7701 Telegraph Road, Bldg #2594 (Room 146B),
Alexandria, VA 22315-3800
Phone (703) 428-7614, FAX (703) 428-0197
Email scharja@hqda.army.mil

8) Sustainable Project Rating Tool (SPiRiT) Authors are:
Stephen N. Flanders (Lead), U. S. Army Engineering Research & Development Center (ERDC-CRREL)
Richard L. Schneider, U. S. Army Engineering Research & Development Center (ERDC-CERL)
Donald Fournier, U. S. Army Engineering Research & Development Center (ERDC-CERL)
Annette Stumpf, U. S. Army Engineering Research & Development Center (ERDC-CERL)

9) Army/USACE employees are members of the USGBC with membership privileges accessible via the USGBC web site, http://www.usgbc.org. For information on membership and access to available LEED resources to support use of SPiRiT and sustainable design in your projects, contact Richard Schneider at (217) 373-6752 or richard.l.schneider@erdc.usace.army.mil (Annette Stumpf at (217) 352-6511 ext. 7542 or annette.l.stumpf@erdc.usace.army.mil alternate).

10) For the latest information on SPiRiT and for access to guidance, tools and resources supporting sustainable design initiatives, visit the CERL 'Sustainable Design and Development Resource' website, http://www.cecer.army.mil/SustDesign. There you may also join the CERL Sustainable Design ListServ to be directly notified of information pertinent to sustainable design.

1.0 Sustainable Sites — Score 20

1.R1 Erosion, Sedimentation, and Water Quality Control [1] — Reqd.

Intent: Control erosion and pollutants to reduce negative impacts on water and air quality.

Requirement:

- ❑ Design a site sediment and erosion control plan and a pollution prevention plan that conforms to best management practices in the EPA's Storm Water Management for Construction Activities, EPA Document No. EPA-833-R-92-001, Chapter 3, OR local Erosion and Sedimentation Control standards and codes, whichever is more stringent. The plan shall meet the following objectives:
  - Prevent loss of soil during construction by storm water runoff and/or wind erosion, including protecting topsoil by stockpiling for reuse.
  - Prevent sedimentation of storm sewer or receiving streams and/or air pollution with dust and particulate matter.
  - Prevent hazardous material discharge into storm water systems.
  - Prevent petroleum oils and lubricants (POL) discharge into storm water systems.

Technologies /Strategies: The EPA standard lists numerous measures such as silt fencing, sediment traps, oil grit separators, construction phasing, stabilization of steep slopes, maintaining vegetated ground cover and providing ground cover that will meet this prerequisite.

1.C1 Site Selection [1]

Intent: Avoid development of inappropriate sites and reduce the environmental impact from the location of a building on a site. Select site based on functional adjacencies/relationships and land use compatibility.

Requirement:

- ❑ Do not develop buildings on portions of sites that meet any one of the following criteria: **1**
  - Prime training or maneuver land.
  - Land whose elevation is lower than 5 ft. above the 100-year flood elevation as defined by FEMA.
  - Land that provides habitat for any species on the Federal or State threatened or endangered list.
  - Within 100 feet of any wetland as defined by 40 CFR, Parts 230-233 and Part 22, OR as defined by local or state rule or law, whichever is more stringent.
- ❑ Select site based on functional adjacencies/relationships and land use compatibility. **1**
  - Select sites close to existing roads and utilities or use an existing structure to minimize the need for new infrastructure.
  - Select site in area of high density.
  - Site facilities based on the strength of their relationships to other facilities/land-uses to limit travel distances. The stronger the relationship/functional interaction, the closer the distance between two facilities.
  - Select for distance to installation/base transit systems and access to pedestrian ways and bike paths.
  - Select for development previously used or developed suitable and available sites.

Technologies /Strategies: Screen potential building sites for these criteria and/or ensure that these criteria are addressed by the designer during the conceptual design phase. Utilize landscape architects, ecologists, environmental engineers, civil engineers, and similar professionals for the screening process. New wetlands constructed as part of stormwater mitigation or other site restoration efforts are not affected by the restrictions of this prerequisite.

---

[1] Adapted material not reviewed or endorsed by U. S. Green Building Council.

1.C2 Installation/Base Redevelopment [1]

Intent: Channel development to installation/base cantonment areas with existing infrastructure, protecting greenfields and preserving habitat and natural resources.

Requirement:

- ❑ Increase localized density to conform to existing or desired density goals by utilizing sites that are located within existing cantonment areas of high development density. **1**
- ❑ Select sites close to existing roads and utilities or use an existing structure to minimize the need for new infrastructure. **1**

Technologies /Strategies: During the site selection process give preference to previously developed sites with installation/base cantonment redevelopment potential such as facility reduction program cleared sites.

1.C3 Brownfield Redevelopment [1]

Intent: Rehabilitate damaged sites where development is complicated by real or perceived environmental contamination, reducing pressure on undeveloped land.

Requirement:

- ❑ Develop on a site classified as a brownfield and provide remediation as required by EPA's Brownfield Redevelopment program requirements OR Develop a brownfield site (a site that has been contaminated by previous uses). **1**

Technologies /Strategies: Screen potential damaged sites for these criteria prior to selection for rehabilitation.

Utilize EPA OSWER Directive 9610.17 and ASTM Standard Practice E1739 for site remediation where required.

1.C4 Alternative Transportation [1]

Intent: Reduce pollution and land development impacts from automobile use.

Requirement:

- ❑ Locate building within ½ mile of installation/base transit systems. **1**
- ❑ Provide suitable means for securing bicycles, with convenient changing/shower facilities for use by cyclists, for 5% or more of building occupants. **1**
- ❑ Locate building within 2 miles of alternative-fuel refueling station(s). **1**
- ❑ Size parking capacity not to exceed minimum installation/base cantonment requirements AND provide preferred parking for carpools or van pools capable of serving 5% of the building occupants, OR, add no new parking for rehabilitation projects AND provide preferred parking for carpools or van pools capable of serving 5% of the building occupants. **1**

Technologies /Strategies: Select sites near public installation/base transit served by safe, convenient pedestrian pathways.

---

[1] Adapted material not reviewed or endorsed by U. S. Green Building Council.

1.C5 Reduced Site Disturbance [1]

Intent: Conserve existing natural areas and restore damaged areas to provide habitat and promote biodiversity.

Requirement:

- ❑ On greenfield sites, limit site disturbance including earthwork and clearing of vegetation to 40 feet beyond the building perimeter, 5 feet beyond primary roadway curbs, walkways, and main utility branch trenches, and 25 feet beyond pervious paving areas that require additional staging areas in order to limit compaction in the paved area; OR, on previously developed sites, restore a minimum of 50% of the remaining open area by planting native or adapted vegetation. **1**
- ❑ Reduce the development footprint (including building, access roads and parking) to exceed the installation/base's/base's master plan local zoning's open space requirement for the site by 25% or in accordance with installation/base policy on open space set asides, whichever is greater. **1**

Technologies /Strategies: Note requirements on plans and in specifications. Establish contractual penalties for destruction of trees and site areas noted for protection. Reduce footprints by tightening program needs and stacking floor plans. Establish clearly marked construction and disturbance boundaries. Delineate laydown, recycling, and disposal areas. Use areas to be paved as staging areas. Work with local horticultural extension services, native plant societies, or installation/base agronomy staff to select indigenous plant species for site restoration and landscaping.

1.C6 Stormwater Management [1]

Intent: Limit disruption of natural water flows by minimizing storm water runoff, increasing on-site infiltration and reducing contaminants.

Requirement: Implement a stormwater management plan that results in:

- ❑ No net increase in the rate or quantity of stormwater runoff from undeveloped to developed conditions; OR, if existing imperviousness is greater than 50%, implement a stormwater management plan that results in a 25% decrease in the rate and quantity of stormwater runoff. **1**
- ❑ Treatment systems designed to remove 80% of the average annual post development total suspended solids (TSS), and 40% of the average annual post development total phosphorous (TP), by implementing Best Management Practices (BMPs) outlined in EPA's Guidance Specifying Management Measures for Sources of Nonpoint Pollution in Coastal Waters (EPA-840-B-92-002 1/93). **1**

Technologies /Strategies: Significantly reduce impervious surfaces, maximize on-site stormwater infiltration, and retain pervious and vegetated areas. Capture rainwater from impervious areas of the building for groundwater recharge or reuse within building. Use green/vegetated roofs. Utilize biologically-based and innovative stormwater management features for pollutant load reduction such as constructed wetlands, stormwater filtering systems, bioswales, bio-retention basins, and vegetated filter strips. Use open vegetated swales to reduce drainage velocity and erosion, reduce system maintenance, increase vegetative variety and support wildlife habitat where space permits.

1.C7 Landscape and Exterior Design to Reduce Heat Islands [2]

Intent: Reduce heat islands (thermal gradient differences between developed and undeveloped areas) to minimize impact on microclimate and human and wildlife habitat.

Requirement:

- ❑ Provide shade (within 5 years) on at least 30% of non-roof impervious surface on the site, including parking lots, walkways, plazas, etc., OR, use light-colored/ high-albedo materials (reflectance of at least 0.3) for 30% of the site's non-roof impervious surfaces, OR place a minimum of 50% of parking space under-ground OR use open-grid pavement system (net impervious area of LESS than 50%) for a minimum of 50% of the parking lot area. **1**
- ❑ Use ENERGY STAR Roof compliant, high-reflectance AND low emissivity roofing (initial reflectance of at least .65 and three-year-aged reflectance of at least .5 when tested in accordance with ASTM E408) for a minimum of 75% of the roof surface; OR, install a "green" (vegetated) roof for at least 50% of the roof area. **1**

Technologies /Strategies: Employ design strategies, materials, and landscaping designs that reduce heat absorption of exterior materials. Note albedo/reflectance requirements in the drawings and specifications. Provide shade (calculated on June 21, noon solar time) using native or climate tolerant trees and large shrubs, vegetated trellises, or other exterior structures supporting vegetation. Substitute vegetated surfaces for hard surfaces. Explore elimination of blacktop and the use of new coatings and integral colorants for asphalt to achieve light colored surfaces.

---

[1] Adapted material not reviewed or endorsed by U. S. Green Building Council.

[2] © U. S. Green Building Council. Used by permission.

1.C8 **Light Pollution Reduction** [1]

Intent: Eliminate light trespass from the building site, improve night sky access, and reduce development impact on nocturnal environments.

Requirement: ❑ Do not exceed Illuminating Engineering Society of North America (IESNA) footcandle level requirements as stated in the Recommended Practice Manual: Lighting for Exterior Environments, AND design interior and exterior lighting such that zero direct-beam illumination leaves the building site. **1**

Technologies /Strategies: Consult IESNA Recommended Practice Manual: Lighting for Exterior Environments for Commission Internationle de l'Eclairage (CIE) zone and pre and post curfew hour descriptions and associated ambient lighting level requirements. Ambient lighting for pre-curfew hours for CIE zones range between .01 footcandles for areas with dark landscapes such as parks, rural, and residential areas, and 1.5 footcandles for areas with high ambient brightness such as installation/base areas with high levels of nighttime activity. Design site lighting and select lighting styles and technologies to have a minimal impact off-site and minimal contribution to sky glow. Minimize lighting of architectural and landscape features. Exterior lighting should be consistent with security lighting requirements.

1.C9 **Optimize Site Features**

Intent: Optimize utilization of the site's existing natural features and placement of man-made features on the site.

Requirement: ❑ Perform both of the following: **1**

- Maximize the use of free site energy.
- Plan facility, parking and roadways to "fit" existing site contours and limit cut and fill.

Technologies /Strategies: Evaluate site resources to ascertain how each can enhance the proposed project and visa versa. Work to maximum advantage of the site's solar and wind attributes. Use landscaping to optimize solar and wind conditions and to contribute to energy efficiency; Locate and orient the facility on the site to optimize solar and wind conditions.

1.C10 **Facility Impact**

Intent: Minimize negative impacts on the site and on neighboring properties and structures; avoid or mitigate excessive noise, shading on green spaces, additional traffic, obscuring significant views, etc.

Requirement: ❑ Cluster facilities to reduce impact, access distance to utilities and sufficient occupant density to support mass transit. **1**

❑ Collaborate with installation/base and community planners to identify and mitigate potential impacts of the project beyond site boundaries, and transportation planners to insure efficient public transport. **1**

Technologies /Strategies: Involve local/regional planners and community members in installation/base master planning processes. Recognize the context and the impact of a project beyond site boundaries, and integrate it with the larger installation/base/community context/land use.

1.C11 **Site Ecology**

Intent: Identify and mitigate all existing site problems including contamination of soil, water, and air, as well as any negative impacts caused by noise, eyesores, or lack of vegetation, enhancing or creating new site habitat.

Requirement: ❑ Develop site environmental management and mitigation plan. **1**

Technologies /Strategies: Understand site and surrounding ecosystem interdependence and interconnectivity. Plan landscaping scheme to incorporate biodiversity. Preserve/enhance existing trees, hydrological features, ecosystems, habitats, and cultural resources. Increase the existence of healthy habitat for native species. Reintroduce native plants and trees where they have been destroyed by previous development.

---

[1] Adapted material not reviewed or endorsed by U. S. Green Building Council.

2.0 Water Efficiency — Score 5

2.C1 Water Efficient Landscaping [2]

Intent: Limit or eliminate the use of potable water for landscape irrigation.

Requirement:

- ❑ Use high efficiency irrigation technology, OR, use captured rain or recycled site water to reduce potable water consumption for irrigation by 50% over conventional means. **1**
- ❑ Use only captured rain or recycled site water for an additional 50% reduction (100% total reduction) of potable water for site irrigation needs, OR, do not install permanent landscape irrigation systems. **1**

Technologies /Strategies: Develop a landscaping water use baseline according to the methodology outlined in the LEED Reference Guide. Specify water-efficient, native or adapted, climate tolerant plantings. High efficiency irrigation technologies include micro irrigation, moisture sensors, or weather data based controllers. Feed irrigation systems with captured rainwater, gray water, or on-site treated wastewater.

2.C2 Innovative Wastewater Technologies [2]

Intent: Reduce generation of wastewater and potable water demand, while increasing local aquifer recharge.

Requirement:

- ❑ Reduce the use of municipally provided potable water for building sewage conveyance by a minimum of 50%, OR, treat 100% of wastewater on site to tertiary standards. **1**

Technologies /Strategies: Develop a wastewater baseline according to the methodology outlined in the LEED Reference Guide. Implement decentralized on-site wastewater treatment and reuse systems. Decrease the use of potable water for sewage conveyance by utilizing gray and/or black water systems. Non-potable reuse opportunities include, toilet flushing, landscape irrigation, etc. Provide advanced wastewater treatment after use by employing innovative, ecological, on-site technologies including constructed wetlands, a mechanical recirculating sand filter, or aerobic treatment systems.

2.C3 Water Use Reduction [1]

Intent: Maximize water efficiency within buildings to reduce the burden on municipal water supply and wastewater systems.

Requirement:

- ❑ Employ strategies that in aggregate use 20% less water than the water use baseline calculated for the building (not including irrigation) after meeting Energy Policy Act (EPACT) of 1992 fixture performance requirements. **1**
- ❑ Exceed the potable water use reduction by an additional 10% (30% total efficiency increase). **1**

Technologies /Strategies: Develop a water use baseline including all water consuming fixtures, equipment, and seasonal conditions according to methodology guidance outlined in the LEED Reference Guide. Specify water conserving plumbing fixtures that exceed Energy Policy Act (EPACT) of 1992 fixture requirements in combination with ultra high efficiency or dry fixture and control technologies. Specify high water efficiency equipment (dishwashers, laundry, cooling towers, etc.). Use alternatives to potable water for sewage transport water. Use recycled or storm water for HVAC/process make up water. Install cooling tower systems designed to minimize water consumption from drift, evaporation and blowdown.

---

[2] © U. S. Green Building Council. Used by permission.

[1] Adapted material not reviewed or endorsed by U. S. Green Building Council.

3.0 Energy and Atmosphere — Score 28

3.R1 Fundamental Building Systems Commissioning [1] — Reqd.

Intent: Verify and ensure that fundamental building elements and systems are designed, installed and calibrated to operate as intended.

Requirement: ❑ Implement all of the following fundamental best practice commissioning procedures.

- Engage a commissioning authority.
- Develop design intent and basis of design documentation.
- Include commissioning requirements in the construction documents.
- Develop and utilize a commissioning plan.
- Verify installation, functional performance, training and documentation.
- Complete a commissioning report.

Technologies /Strategies: Introduce standards and strategies into the design process early, and then carry through selected measures by clearly stating target requirements in the construction documents. Tie contractor final payments to documented system performance. Perform additional commissioning in accordance with the DOE Building Commissioning Guide, Version 2.2. Refer to the LEED Reference Guide for detailed descriptions of required elements and references to additional commissioning guides. Specify pre-occupancy baseline IAQ testing at time of commissioning. Test for indoor air concentrations of CO, CO2, total VOCs and particulates. Test to assure that adequate ventilation rates have been achieved prior to initial occupancy.

3.R2 Minimum Energy Performance [1] — Reqd.

Intent: Establish the minimum level of energy efficiency for the base building and systems.

Requirement: ❑ Design to meet building energy efficiency and performance as required by TI 800-01 (Design Criteria).

Technologies /Strategies: Use building modeling and analysis techniques to establish and document compliance. ASHRAE/IESNA 90.1-1999 provides guidance for establishing building base case development and analysis. Refer to the LEED Reference Guide for a wide variety of energy efficiency strategy resources.

Use a professionally recognized and proven computer program or programs that integrate architectural features with air-conditioning, heating, lighting, and other energy producing or consuming systems. These programs will be capable of simulating the features, systems, and thermal loads used in the design. Using established weather data files, the program will perform 8760 hourly calculations. BLAST, DOE-2 or EnergyPlus are acceptable programs for these purposes.

3.R3 CFC Reduction in HVAC&R Equipment [2] — Reqd.

Intent: Reduce ozone depletion.

Requirement: ❑ Zero use of CFC-based refrigerants in new base building HVAC&R systems. When reusing existing base building HVAC equipment, complete a comprehensive CFC phaseout conversion.

Technologies /Strategies: Specify only non-CFC-based refrigerants in all base building HVAC&R systems.

---

[1] Adapted material not reviewed or endorsed by U. S. Green Building Council.

[2] © U. S. Green Building Council. Used by permission.

3.C1 Optimize Energy Performance [1]

Intent: Achieve increasing levels of energy performance above the prerequisite standard to reduce environmental impacts associated with excessive energy use.

Requirement: ❑ Reduce design energy usage (DEU) compared to the energy use budget (EUB) in joules per square meter per year for regulated energy components as described in the requirements of Chapter 11 of the TI 800-01 (Design Criteria), as demonstrated by a whole building simulation. **20**

- 1 Point will be awarded for every reduction in design energy use of 2.5% for both new and existing facilities for a maximum score of 20 points.

Regulated energy components include HVAC systems, building envelope, service hot water systems, lighting and other regulated systems as defined by ASHRAE.

Technologies /Strategies: Develop and use building modeling and analysis techniques to establish a base case that meets the minimum prerequisite standard. ASHRAE/IESNA 90.1-1999 provides guidance for establishing building base case development and analysis. Perform interactive energy use analysis for selected design elements that affect energy performance and document compliance.

Unit of measure for performance shall be annual energy usage in joules per square meter. Life-Cycle energy costs shall be determined using rates for purchased energy, such as electricity, gas, oil, propane, steam, and chilled water and approved by the adopting authority. Refer to the LEED Reference Guide or Whole Building Design Guide for a wide variety of energy efficiency resources and strategies including conservation measures, electromechanical energy efficiency technologies (for example ground-source heat pumps), passive heating and cooling strategies, solar hot water, and daylighting.

Life-Cycle costing will be done in accordance with 10 CFR 436.

Consider installation of an Energy Management and Control System (EMCS), which is compatible with exiting installation systems to optimize performance. Use sensors to control loads based on occupancy, schedule and/or the availability of natural resources use (day light or natural ventilation).

3.C2 Renewable Energy [1]

Intent: Encourage and recognize increasing levels of self-supply through renewable technologies to reduce environmental impacts associated with fossil fuel energy use.

Requirement: ❑ Supply a net fraction of the building's total energy use through the use of on-site renewable energy systems.

% of Total Annual Energy Usage in Renewables	
5%	**1**
10%	**2**
15%	**3**
20%	**4**

Technologies /Strategies: Employ the use of on-site non-polluting-source renewable technologies contributing to the total energy requirements of the project. Consider and use high temperature solar and/or geothermal, photovoltaics, wind, biomass (other than unsustainably harvested wood), and bio-gas. Passive solar, solar hot water heating, ground-source heat pumps, and daylighting do not qualify for points under this credit. Credit for these strategies is given in Energy & Atmosphere Credit 1: Optimizing Energy Performance.

[1] Adapted material not reviewed or endorsed by U. S. Green Building Council.

3.C3 Additional Commissioning [2]

Intent: Verify and ensure that the entire building is designed, constructed, and calibrated to operate as intended.

Requirement: ❑ In addition to the Fundamental Building Commissioning prerequisite, implement the following additional commissioning tasks: 1

1. Conduct a focused review of the design prior to the construction documents phase.
2. Conduct a focused review of the construction documents when close to completion.
3. Conduct a selective review of contractor submittals of commissioned equipment.
4. Develop a system and energy management manual.
5. Have a contract in place for a near-warranty end or post occupancy review.

Items 1, 2, and 3 must be performed by someone other than the designer.

Technologies /Strategies: Introduce standards and strategies into the design process early, and then carry through selected measures by clearly stating target requirements in the construction documents. Tie contractor final payments to documented system performance. Refer to the LEED Reference Guide for detailed descriptions of required elements and references to additional guidelines.

3.C4 << Deleted >> [1]

3.C5 Measurement and Verification [1]

Intent: Provide for the ongoing accountability and optimization of building energy and water consumption performance over time.

Requirement: ❑ Comply with the installed equipment requirements for continuous metering as stated in selected Measurement and Verification Methods - Option B: Retrofit Isolation of the US DOE's International Performance Measurement and Verification Protocol (IPMVP) for the following: 1

- Lighting systems and controls.
- Constant and variable motor loads.
- Variable frequency drive (VFD) operation.
- Chiller efficiency at variable loads (kW/ton).
- Cooling load.
- Air and water economizer and heat recovery cycles.
- Air distribution static pressures and ventilation air volumes.
- Boiler efficiencies.
- Building specific process energy efficiency systems and equipment.
- Indoor water risers and outdoor irrigation systems.

Technologies /Strategies: Design and specify equipment to be installed in base building systems to allow for comparison, management, and optimization of actual vs. estimated energy and water performance. Employ building automation systems to perform M&V functions where applicable. Tie contractor final payments to documented M&V system performance and include in the commissioning report. Provide for ongoing M&V system maintenance and operating plan in building operations and maintenance manuals. Consider installation/base of an Energy Management and Control System (EMCS), which is compatible with exiting installation/base systems to optimize performance.

---

[2] © U. S. Green Building Council. Used by permission.

[1] Adapted material not reviewed or endorsed by U. S. Green Building Council.

3.C6 **Green Power** [1]

Intent: Encourage the development and use of grid-source, renewable energy technologies on a net zero pollution basis.

Requirement: ❑ Engage in a two year contract to purchase the amount of power equal to projected building consumption generated from renewable sources that meet the Center for Resource Solutions (CRS) Green-E requirements. **1**

Technologies /Strategies: Purchase power from a provider that guarantees a fraction of its delivered electric power is from net nonpolluting renewable technologies. Begin by contacting local utility companies. If the project is in an open market state, investigate Green Power and Power Marketers licensed to provide power in that state. Grid power that qualifies for this credit originates from solar, wind, geothermal, biomass, or low-impact hydro sources. Low-impact hydro shall comply with the Low Impact Hydropower Certification Program.

3.C7 **Distributed Generation**

Intent: Encourage the development and use of distributed generation technologies, which are less polluting than grid-source energy.

Requirement: ❑ Reduce total energy usage and emissions by considering source energy implications and local cogeneration and direct energy conversion. Generate at least 50% of the building's projected annual consumption by on-site distributed generation sources. **1**

Technologies /Strategies: Investigate the use of integrated generation and delivery systems, such as co-generation, fuel cells, micro-turbines and off-peak thermal storage.

---

[1] Adapted material not reviewed or endorsed by U. S. Green Building Council.

4.0 Materials and Resources — Score 13

4.R1 Storage & Collection of Recyclables [1] — Reqd.

Intent: Facilitate the reduction of waste generated by building occupants that is hauled to and disposed of in landfills.

Requirement:
- ❑ Provide an easily accessible area that serves the entire building that is dedicated to the separation, collection and storage of materials for recycling including (at a minimum) paper, glass, plastics, and metals.

Technologies /Strategies: Establish a waste management plan which meets requirements of the installation/base environmental and/or solid waste management plans in cooperation with users to encourage recycling. Reserve space for recycling functions early in the building occupancy programming process and show areas dedicated to collection of recycled materials on space utilization plans. Broader recycling support space considerations should allow for collection and storage of the required elements and newspaper, organic waste (food and soiled paper), and dry waste. When collection bins are used, bin(s) should be able to accommodate a 75% diversion rate and be easily accessible to custodial staff and recycling collection workers. Consider bin designs that allow for easy cleaning to avoid health issues.

4.C1 Building Reuse [1]

Intent: Extend the life cycle of existing building stock, conserve resources, retain cultural resources, reduce waste, and reduce environmental impacts of new buildings as they relate to materials manufacturing and transport.

Requirement: Reuse large portions of existing structures during renovation or redevelopment projects.

- ❑ Maintain at least 75% of existing building structure and shell (exterior skin and framing excluding window assemblies). — 1
- ❑ Maintain an additional 25% (100% total) of existing building structure and shell (exterior skin and framing excluding window assemblies). — 1
- ❑ Maintain 100% of existing building structure and shell AND 50% non-shell (walls, floor coverings, and ceiling systems). — 1

Technologies /Strategies: Evaluate retention of existing structure. Consider facade preservation, particularly in installation/base areas. During programming and space planning, consider adjusting needs and occupant use patterns to fit within existing building structure and interior partition configurations. Identify and effectively address energy, structural, and indoor environmental (lead & asbestos) issues in building reuse planning and deconstruction documents. Percentage of reused non-shell building portions will be calculated as the total area (s.f.) of reused walls, floor covering, and ceiling systems, divided by the existing total area (s.f.) of walls, floor covering, and ceiling systems.

4.C2 Construction Waste Management [1]

Intent: Divert construction, demolition, and land clearing debris from landfill disposal. Redirect recyclable material back to the manufacturing process.

Requirement: Develop and implement a waste management plan, quantifying material diversion by weight:

- ❑ Recycle and/or salvage at least 50% (by weight) of construction, demolition, and land clearing waste. — 1
- ❑ Recycle and/or salvage an additional 25% (75% total by weight) of the construction, demolition, and land clearing debris. — 1

Technologies /Strategies: Develop and specify a waste management plan which meets requirements of the installation/base environmental and/or solid waste management plans that identifies licensed haulers and processors of recyclables; identifies markets for salvaged materials; employs deconstruction, salvage, and recycling strategies and processes, includes waste auditing; and documents the cost for recycling, salvaging, and reusing materials. Source reduction on the job site should be an integral part of the plan.

The plan should address recycling of corrugated cardboard, metals, concrete brick, asphalt, land clearing debris (if applicable), beverage containers, clean dimensional wood, plastic, glass, gypsum board, and carpet; evaluate the cost-effectiveness of recycling rigid insulation, engineered wood products and other materials; hazardous materials storage and management; and participation in manufacturers' "take-back" programs to the maximum extent possible. Refer to the LEED Reference Guide for guidelines and references that provide waste management plan development and implementation support including model bid specifications.

---

[1] Adapted material not reviewed or endorsed by U. S. Green Building Council.

4.C3 **Resource Reuse** [2]

Intent: Extend the life cycle of targeted building materials, reducing environmental impacts related to materials manufacturing and transport.

Requirement:

- ❑ Specify salvaged or refurbished materials for 5% of building materials. **1**
- ❑ Specify salvaged or refurbished materials for 10% of building materials. **1**

Technologies /Strategies: Commonly salvaged building materials include wood flooring/ paneling/cabinets, doors and frames, mantels, iron work and decorative lighting fixtures, brick, masonry and heavy timbers. See the LEED Reference Guide for calculation tools and guidelines. Determine percentages in terms of dollar value using the following steps:

1. Calculate total dollars* (see exclusions) of the salvaged or refurbished material.
2. Calculate total dollars (see exclusions) of all building materials.
3. Divide Step 1 by Step 2 to determine the percentage.

Exclusions: In total dollar calculations, exclude; labor costs; all mechanical and electrical material and labor costs; and project overhead and fees. *If the cost of the salvaged or refurbished material is below market value, use replacement cost to estimate the material value, otherwise use actual cost to the project.

4.C4 **Recycled Content** [1]

Intent: Increase demand for building products that have incorporated recycled content material, reducing the impacts resulting from extraction of new material.

Requirement:

- ❑ Specify a minimum of 25% of building materials that contain in aggregate a minimum weighted average of 20% post-consumer recycled content material, OR, a minimum weighted average of 40% post-industrial recycled content material. **1**
- ❑ Specify an additional 25% (50% total) of building materials that contain in aggregate, a minimum weighted average of 20% post consumer recycled content material, OR, a minimum weighted average of 40% post-industrial recycled content material. **1**

Technologies /Strategies: Specify building materials containing recycled content for a fraction of total building materials. Select products and materials with supporting information from the AIA Resource Guide or the EPA Environmentally Preferable Purchasing (EPP) Program. Common building materials and products with recycled content include; wall, partition, and ceiling materials and systems; insulation; tiles and carpets; cement, concrete, and reinforcing metals; structural and framing steel. For products/materials not listed, selection should be made on the basis of EPP criterion and/or:

- Toxicity;
- Embodied energy;
- Production use of water, energy and ozone depleting substances (ODSs);
- Production limits on toxic emissions and effluents;
- Minimal, reusable or recycled/recyclable packaging;
- Impact on indoor environmental quality (IEQ);
- Installation that limits generation of waste;
- Materials that limit waste generation over their life;
- EPA guideline compliance; and
- Harvested on a sustainable yield basis.

See the LEED Reference Guide for a summary of the EPA guidelines and calculation methodology guidelines. Determine percentages in terms of dollar value using the following steps:

1. Calculate total dollars (see exclusions) of the material that contain recycled content.
2. Calculate total dollars (see exclusions) of all building materials.
3. Divide Step 1 by Step 2 to determine the percentage.

Exclusions: Labor costs; all mechanical and electrical material and labor costs; project overhead and fees)

---

[2] © U. S. Green Building Council. Used by permission.

[1] Adapted material not reviewed or endorsed by U. S. Green Building Council.

4.C5 **Local/Regional Materials** [2]

Intent: Increase demand for building products that are manufactured locally, reducing the environmental impacts resulting from transportation, and supporting the local economy.

Requirement:

- ❑ Specify a minimum of 20% of building materials that are manufactured regionally within a radius of 500 miles. 1
- ❑ Of these regionally manufactured materials, specify a minimum of 50% that are extracted, harvested, or recovered within 500 miles. 1

Technologies /Strategies: Specify and install regionally extracted, harvested, and manufactured building materials. Contact the state and local waste management boards for information about regional building materials. See the LEED Reference Guide for calculation methodology guidelines. Determine percentages in terms of dollar value using the following steps:

1. Calculate total dollars (see exclusions) of material that is locally or regionally manufactured.
2. Calculate total dollars (see exclusions) of all building materials.
3. Divide Step 1 by Step 2 to determine the percentage.

Exclusions: Labor costs; all mechanical and electrical material and labor costs; project overhead and fees.

4.C6 **Rapidly Renewable Materials** [2]

Intent: Reduce the use and depletion of finite raw and long cycle renewable materials by replacing them with rapidly renewable materials.

Requirement:

- ❑ Specify rapidly renewable building materials for 5% of total building materials. 1

Technologies /Strategies: Rapidly renewable resources are those materials that substantially replenish them-selves faster than traditional extraction demand (e.g. planted and harvested in less than a 10 year cycle) and do not result in significant biodiversity loss, increase erosion, air quality impacts, and that are sustainably managed. See the LEED Reference Guide for calculation methodology guidelines. Determine percentages in terms of dollar value using the following steps:

1. Calculate total dollars (see exclusions) of materials that are considered to be rapidly renewable.
2. Calculate total dollars (see exclusions) of all building materials.
3. Divide Step 1 by Step 2 to determine the percentage.

Exclusions: Labor costs; all mechanical and electrical material and labor costs; project overhead and fees.

4.C7 **Certified Wood** [2]

Intent: Encourage environmentally responsible forest management.

Requirement:

- ❑ Use a minimum of 50% of wood-based materials certified in accordance with the Forest Stewardship Council guidelines for wood building components including but not limited to framing, flooring, finishes, furnishings, and non-rented temporary construction applications such as bracing, concrete form work and pedestrian barriers. 1

Technologies /Strategies: Refer to the Forest Stewardship Council guidelines for wood building components that qualify for compliance to the requirements and incorporate into material selection for the project.

---

[2] © U. S. Green Building Council. Used by permission.

5.0 Indoor Environmental Quality (IEQ) Score 17

5.R1 Minimum IAQ Performance [1] Reqd.

Intent: Establish minimum IAQ performance to prevent the development of indoor air quality problems in buildings, maintaining the health and well being of the occupants.

Requirement: ❑ Meet the minimum requirements of voluntary consensus standard ASHRAE 62-1999, Ventilation for Acceptable Indoor Air Quality and approved Addenda.

Technologies /Strategies: Include proactive design details that will eliminate some of the common causes of indoor air quality problems in buildings. Introduce standards into the design process early. Incorporate references to targets in plans and specifications. Ensure ventilation system outdoor air capacity can meet standards in all modes of operation. Locate building outdoor air intakes (including operable windows) away from potential pollutants/contaminant sources such as sporulating plants (allergens), loading areas, building exhaust fans, cooling towers, sanitary vents, dumpsters, vehicular exhaust, and other sources. Include operational testing in the building commissioning report. Design cooling coil drain pans to ensure complete draining. Include measures to control and mitigate radon buildup in areas where it is prevalent. Limit humidity to a range that minimizes mold growth and promotes respiratory health.

5.R2 Environmental Tobacco Smoke (ETS) Control [2] Reqd.

Intent: Prevent exposure of building occupants and systems to Environmental Tobacco Smoke (ETS).

Requirement: ❑ Zero exposure of nonsmokers to ETS by prohibition of smoking in the building, OR, by providing a designated smoking room designed to effectively contain, capture and remove ETS from the building. At a minimum, the smoking room shall be directly exhausted to the outdoors with no recirculation of ETS-containing air to the non-smoking area of the building, enclosed with impermeable structural deck-to-deck partitions and operated at a negative pressure compared with the surrounding spaces of at least 7 Pa (0.03 inches of water gauge). Performance of smoking rooms shall be verified using tracer gas testing methods as described in ASHRAE Standard 129-1997. Acceptable exposure in non-smoking areas is defined as less than 1% of the tracer gas concentration in the smoking room detectable in the adjoining non-smoking areas. Smoking room testing as described in the ASHRAE Standard 129-1997 is required in the contract documents and critical smoking facility systems testing results must be included in the building commissioning plan and report or as a separate document.

Technologies /Strategies: Prohibit smoking in the building and/or provide designated smoking areas outside the building in locations where ETS cannot reenter the building or ventilation system and away from high building occupant or pedestrian traffic.

5.C1 IAQ Monitoring [1]

Intent: Provide capacity for indoor air quality (IAQ) monitoring to sustain long term occupant health and comfort.

Requirement: ❑ Install a permanent carbon dioxide (CO_2) monitoring system that provides feedback on space ventilation performance in a form that affords operational adjustments, AND specify initial operational set point parameters that maintain indoor carbon dioxide levels no higher than outdoor levels by more than 530 parts per million at any time. 1

Technologies /Strategies: Install an independent system or make CO_2 monitoring a function of the building automation system. Situate monitoring locations in areas of the building with high occupant densities and at the ends of the longest runs of the distribution ductwork. Specify that system operation manuals require calibration of all of the sensors per manufacturer recommendations but not less than one year. Include sensor and system operational testing and initial set point adjustment in the commissioning plan and report. Also consider periodic monitoring of carbon monoxide (CO), total volatile organic compounds (TVOCs), and particulates (including PM10).

---

[1] Adapted material not reviewed or endorsed by U. S. Green Building Council.

[1] Adapted material not reviewed or endorsed by U. S. Green Building Council.

5.C2 **Increase Ventilation Effectiveness** [2]

Intent: Provide for the effective delivery and mixing of fresh air to building occupants to support their health, safety, and comfort.

Requirement:

- ❑ For mechanically ventilated buildings, design ventilation systems that result in an air change effectiveness (E) greater than or equal to 0.9 as determined by ASHRAE 129-1997. For naturally ventilated spaces demonstrate a distribution and laminar flow pattern that involves not less than 90% of the room or zone area in the direction of air flow for at least 95% of hours of occupancy. 1

Technologies /Strategies: Employ architectural and HVAC design strategies to increase ventilation effectiveness and prevent short-circuiting of airflow delivery. Techniques available include use of displacement ventilation, low velocity, and laminar flow ventilation (under floor or near floor delivery) and natural ventilation. Operable windows with an architectural strategy for natural ventilation, cross ventilation, or stack effect can be appropriate options with study of inlet areas and locations. See the LEED Reference Guide for compliance methodology guidelines.

5.C3 **Construction IAQ Management Plan** [2]

Intent: Prevent indoor air quality problems resulting from the construction/renovation process, to sustain long term installer and occupant health and comfort.

Requirement: Develop and implement an Indoor Air Quality (IAQ) Management Plan for the construction and pre-occupancy phases of the building as follows:

- ❑ During construction meet or exceed the minimum requirements of the Sheet Metal and Air Conditioning National Contractors Association (SMACNA) IAQ Guideline for Occupied Buildings under Construction, 1995, AND protect stored on-site or installed absorptive materials from moisture damage, AND replace all filtration media immediately prior to occupancy (Filtration media shall have a Minimum Efficiency Reporting Value (MERV) of 13 as determined by ASHRAE 52.2-1999). 1
- ❑ Conduct a minimum two-week building flushout with new filtration media at 100% outside air after construction ends and prior to occupancy, OR, conduct a baseline indoor air quality testing procedure consistent with current EPA protocol for Environmental Requirements, Baseline IAQ and Materials, for the Research Triangle Park Campus, Section 01445. 1

Technologies /Strategies: Specify containment control strategies including protecting the HVAC system, controlling pollutant sources, interrupting pathways for contamination, enforcing proper housekeeping and coordinating schedules to minimize disruption. Specify the construction sequencing to install absorptive materials after the prescribed dry or cure time of wet finishes to minimize adverse impacts on indoor air quality. Materials directly exposed to moisture through precipitation, plumbing leaks, or condensation from the HVAC system are susceptible to microbial contamination. Absorptive materials to protect and sequence installation include; insulation, carpeting, ceiling tiles, and gypsum products. Appoint an IEQ Manager with owner's authority to inspect IEQ problems and require mitigation as necessary.

5.C4 **Low-Emitting Materials** [2]

Intent: Reduce the quantity of indoor air contaminants that are odorous or potentially irritating to provide installer and occupant health and comfort.

Requirement: Meet or exceed VOC limits for adhesives, sealants, paints, composite wood products, and carpet systems as follows:

- ❑ Adhesives must meet or exceed the VOC limits of South Coast Air Quality Management District Rule #1168 by, AND all sealants used as a filler must meet or exceed Bay Area Air Resources Board Reg. 8, Rule 51. 1
- ❑ Paints and coatings must meet or exceed the VOC and chemical component limits of Green Seal requirements. 1
- ❑ Carpet systems must meet or exceed the Carpet and Rug Institute Green Label Indoor Air Quality Test Program. 1
- ❑ Composite wood or agrifiber products must contain no added urea-formaldehyde resins. 1

Technologies /Strategies: Evaluate and preferentially specify materials that are low emitting, non-irritating, nontoxic and chemically inert. Request and evaluate emissions test data from manufacturers for comparative products. Ensure that VOC limits are clearly stated in specifications, in General Conditions, or in each section where adhesives, sealants, coatings, carpets, and composite woods are addressed.

---

[2] © U. S. Green Building Council. Used by permission.

5.C5 Indoor Chemical and Pollutant Source Control [1]

Intent: Avoid exposure of building occupants to potentially hazardous chemicals that adversely impact air quality.

Requirement:

- ❑ Design to minimize cross-contamination of regularly occupied areas by chemical pollutants: 1
  - Employ permanent entryway systems (grills, grates, etc.) to capture dirt, particulates, etc. from entering the building at all high volume entryways, AND provide areas with structural deck to deck partitions with separate outside exhausting, no air recirculation and negative pressure where chemical use occurs (including housekeeping areas and copying/print rooms), AND provide drains plumbed for appropriate disposal of liquid waste in spaces where water and chemical concentrate mixing occurs.

Technologies /Strategies: Design to physically isolate activities associated with chemical contaminants from other locations in the building, providing dedicated systems to contain and remove chemical pollutants from source emitters at source locations. Applicable measures include eliminating or isolating high hazard areas; designing all housekeeping chemical storage and mixing areas (central storage facilities and janitors closets) to allow for secure product storage; designing copy/fax/printer/printing rooms with structural deck to deck partitions and dedicated exhaust ventilation systems; and including permanent architectural entryway system(s) to catch and hold particles to keep them from entering and contaminating the building interior.

Consider utilization of EPA registered anti-microbial treatments in carpet, textile or vinyl wall coverings, ceiling tiles or paints where microbial contamination is a concern. Utilize "breathable" wall finishes where circumstances require, to reduce moisture build-up and prevent microbial contamination. Minimize selection of fibrous materials, e.g. insulation, carpet and padding and flexible fabrics, whose exposed surfaces when exposed to the air stream or occupied space can contribute significant emissions and absorb and re-emit other contaminants over time.

5.C6 Controllability of Systems [2]

Intent: Provide a high level of individual occupant control of thermal, ventilation, and lighting systems to support optimum health, productivity, and comfort conditions.

Requirement:

- ❑ Provide a minimum of one operable window and one lighting control zone per 200 s.f. for all occupied areas within 15 feet of the perimeter wall. 1
- ❑ Provide controls for each individual for airflow, temperature, and lighting for 50% of the non perimeter, regularly occupied areas. 1

Technologies /Strategies: Provide individual or integrated controls systems that control lighting, airflow, and temperature in individual rooms and/or work areas. Consider combinations of ambient and task lighting control and operable windows for perimeter and VAV systems for non perimeter with a 1:1: 2 terminal box to controller to occupant ratio.

5.C7 Thermal Comfort [2]

Intent: Provide for a thermally comfortable environment that supports the productive and healthy performance of the building occupants.

Requirement:

- ❑ Comply with ASHRAE Standard 55-1992, Addenda 1995 for thermal comfort standards including humidity control within established ranges per climate zone. 1
- ❑ Install a permanent temperature and humidity monitoring system configured to provide operators control over thermal comfort performance and effectiveness of humidification and/or dehumidification systems in the building. 1

Technologies /Strategies: Integrated envelope and HVAC system design strategies that achieve thermal comfort conditions based on mean radiant temperature, local air velocity, relative humidity, and air temperature. Install and maintain a temperature and humidity monitoring system for key areas of the building (i.e., at the perimeter, and spaces provided with humidity control). This function can be satisfied by the building automation system. Specify in system operation manuals that all sensors require quarterly calibration. Include criteria verification and system operation in commissioning plan and report.

---

[1] Adapted material not reviewed or endorsed by U. S. Green Building Council.

[2] © U. S. Green Building Council. Used by permission.

5.C8 **Daylight and Views** [2]

Intent: Provide a connection between indoor spaces and the outdoor environment through the introduction of sunlight and views into the occupied areas of the building.

Requirement:

- ❑ Achieve a minimum Daylight Factor of 2% (excluding all direct sunlight penetration) in 75% of all space occupied for critical visual tasks, not including copy rooms, storage areas, mechanical, laundry, and other low occupancy support areas. Exceptions include those spaces where tasks would be hindered by the use of daylight or where accomplishing the specific tasks within a space would be enhanced by the direct penetration of sunlight. 1
- ❑ Direct line of sight to vision glazing from 90% of all regularly occupied spaces, not including copy rooms, storage areas, mechanical, laundry, and other low occupancy support areas. 1

Technologies /Strategies: Implement design strategies to provide access to daylight and views to the outdoors in a glare-free way using exterior sun shading, interior light shelves, and /or window treatments. Orient buildings to maximize daylighting options. Consider shallow or narrow building footprints. Employ courtyards, atriums, clerestory windows, skylights, and light shelves to achieve daylight penetration (from other than direct effect or direct rays from the sun) deep into regularly occupied areas of the building.

5.C9 **Acoustic Environment /Noise Control**

Intent: Provide appropriate acoustic conditions for user privacy and comfort.

Requirement:

- ❑ Minimize environmental noise through appropriate use of insulation, sound-absorbing materials and noise source isolation. 1

Technologies /Strategies: Evaluate each occupied environment and determine the appropriate layout, materials and furnishings design.

5.C10 **Facility In-Use IAQ Management Plan**

Intent: Insure the effective management of facility air quality during its life.

Requirement:

- ❑ Perform all of the following: 1
  - Develop an air quality action plan to include scheduled HVAC system cleaning.
  - Develop an air quality action plan to include education of occupants and facility managers on indoor pollutants and their roles in preventing them.
  - Develop an air quality action plan to include permanent monitoring of supply and return air, and ambient air at the fresh air intake, for carbon monoxide (CO), carbon dioxide (CO 2), total volatile organic compounds (TVOCs), and particulates (including PM10).

Technologies /Strategies: Provide action plan for periodic system maintenance, monitoring, occupant/manager training.

---

[2] © U. S. Green Building Council. Used by permission.

6.0 Facility Delivery Process

Score 7

6.C1 **Holistic Delivery of Facility**

Intent: Encourage a facility delivery process that actively engages all stakeholders in the design process to deliver a facility that meets all functional requirements while effectively optimizing tradeoffs among sustainability, first costs, life cycle costs and mission requirements.

Requirement:

- ❑ Choose team leaders that are experienced in holistic delivery of facilities. **1**
- ❑ Train the entire team in the holistic delivery process. The team must include all stakeholders in the facility delivery, including the users, the contracting staff, the construction representatives, project manager, and design/engineering team members. **1**
- ❑ Identify project goals and metrics. **1**
- ❑ Plan and execute charrettes with team members at critical phases of the facility delivery. **1**
- ❑ Identify and resolve tradeoffs among sustainability, first costs, life cycle costs and mission requirements through charrettes and other collaborative processes. **2**
- ❑ Document required results for each phase of project deliverables that achieve the project goals and are measurable throughout the facility life span. **1**

Technologies /Strategies:

Develop performance specifications or choose competitive range of products that meet environmental criteria.

Use automated modeling and analysis tools to assess site and facility design alternatives.

Conduct life-cycle cost analysis (LCCA) in the design process according to the Federal Facilities Council Technical Report, Sustainable Federal Facilities: A Guide To Integrating Value Engineering, Life Cycle Costing, and Sustainable Development, FFC # 142, 2000.

Conduct a full ecological assessment to include soil quality, water resources and flows, vegetation and trees, wildlife habitats and corridors, wetlands, and ecologically sensitive areas to identify the least sensitive site areas for development. Evaluate space utilization/functions to reduce overall space requirements, considering networking, flextime, flexi-place, dual-use, and other strategies to reduce space requirements/optimize facility size.

7.0 Current Mission — Score 6

7.C1 Operation and Maintenance

Intent: Encourage the development of a facility delivery process that enhances efficient operation and maintenance of the facility.

Requirement:

- ❑ Develop a facility operations and maintenance program to include: **2**
  - Commissioning instructions for all facility systems.
  - Comprehensive facility operations and maintenance instructions for system operation, performance verification procedures and results, an equipment inventory, warrantee information, and recommended maintenance schedule. The instructions should include a comprehensive, preventive maintenance program to keep all facility systems functioning as designed.
  - A periodic training program for occupants, facilities managers, and maintenance staff in all facility operations and maintenance activities.
  - Instructions on sustainable cleaning and pest control practices.
  - Develop a comprehensive site/facility recycling/waste management plan.
- ❑ Provide surfaces, furnishings, and equipment that are appropriately durable, according to life cycle cost analysis. **1**

Technologies /Strategies: Maintain facility elements, systems and subsystems on a routine maintenance schedule to ensure integrity and longevity.

Perform scheduled cleaning and maintenance activities with nontoxic environmentally preferable cleaning products and procedures. Keep air ducts clean and free of microorganisms through a structured program of preventive maintenance. Clean lighting systems following a regular maintenance schedule to ensure optimum light output and energy efficiency.

Use pesticides and herbicides sparingly and only when necessary with preference to natural methods and materials over poisons and toxic agents.

Use automated monitors and controls for energy, water, waste, temperature, moisture, and ventilation monitors and controls. Turn off the lights, computers, computer monitors, and equipment when not in use. Enable power-down features on office equipment.

7.C2 Soldier and Workforce Productivity and Retention

Intent: Provide a high-quality, functional, healthy and safe work environment to promote soldier and workforce productivity and retention.

Requirement:

- ❑ Provide a high quality indoor environment to enhance user/occupant quality of life (QOL). **1**
- ❑ Provide a highly functional work environment to promote user/occupant work productivity. **1**
- ❑ Provide a healthy and safe work environment to sustain QOL and productivity. **1**

Technologies /Strategies: Use a registered/certified interior designer to provide stimulating interior environments with pleasant colors, surface treatments, room proportions and ceiling heights, external views, natural lighting, and quality detailing for interior furnishings, equipment, materials and finishes. Use IES standards to provide light to occupied space with variations in level, comfortable contrasts, natural color rendition, natural/man-made, and adequate controls to optimize light aesthetic qualities. Provide occupant control of individual work areas configuration, and lighting, thermal and ventilation systems.

Collaborate with end users to identify functional and technical requirements and to perform adjacency studies. Configure occupied space to address the specific workers/occupants functions and activities that will be carried out there. Meet TI 800-01 Design Guide requirements. Design and configure occupied space, and select furniture and equipment using human ergonomics. Identify existing user amenities, such as dining, recreation, socialization, shopping and child care facilities. Identify what amenities should be incorporated into the project or provided in the future, nearby facility. Provide ventilation air in sufficient volume free from natural and man made contaminants.

8.0 Future Missions — Score 4

8.C1 Functional Life of Facility and Supporting Systems

Intent: Assess the functional life of a facility and its supporting systems to optimize the infrastructure investment.

Requirement:

- ❑ Identify how long the designed function is likely to occupy the current facility. **1**
- ❑ Identify how long the envelope, structure, HVAC, plumbing, communications, electrical, and other systems are likely to last before requiring replacement or upgrade. Consider economic, functional and physical obsolescence. **1**

Technologies /Strategies: Assess the typical or likely lifespan of the function(s) to be accommodated to forecast eventual adaptation to a different use(s). Assess the life spans of the various building systems/components to forecast their revision/replacement during the facility lifespan and design in a manner that facilitates revision/replacement.

Consider the life span of the weapon systems, doctrines, or other programs supported by the facility.

Use life cycle data and other sources to identify the life span of the embodied systems.

8.C2 Adaptation, Renewal and Future Uses

Intent: Encourage facility design that is responsive to change over time to maximize accommodation of future uses without creating waste and insuring maximum useful life of products.

Requirement:

- ❑ Identify possible future uses for the facility; consider alternatives that expand the list of possible future uses. AND Design the building to accommodate as wide a range of future uses, as practical. AND Design the installation of building systems to accommodate foreseeable change with a minimum amount of disruption, cost, and additional materials. **1**
- ❑ Build the smallest facility necessary to meet current mission functional requirements, using the most efficient shape and form, while taking into consideration expansion capabilities and potential future mission requirements. AND Design the facility for recycling of materials and systems. **1**

Technologies /Strategies: Create durable, long-lasting and adaptable facility shell and structural system. Create an adaptable, flexible facility design using open planning, service corridors, interstitial space, access floors, demountable walls/partitions, modular furniture and other adaptable space configuration/utilization strategies.

Select materials that are recyclable, avoiding composite materials, such as reinforced plastics and carpet fibers and backing. Consider selecting materials and labeling construction materials with identification information to facilitate recycling. Use pre-cut/pre-fabricated materials and use standard lengths and sizes (dimensional modularity) in design. Design facility systems and subsystems for reconfiguration and/or disassembly/recycling using reversible/reusable connectors.

Facility Points Summary

1.0	**Sustainable Sites (S)**	**Score**	**0**	**Max 20**
1.R1	❑ Erosion, Sedimentation and Water Quality Control			[Required]
1.C1	❑ Site Selection			2
1.C2	❑ Installation/Base Redevelopment			2
1.C3	❑ Brownfield Redevelopment			1
1.C4	❑ Alternative Transportation			4
1.C5	❑ Reduced Site Disturbance			2
1.C6	❑ Stormwater Management			2
1.C7	❑ Landscape and Exterior Design to Reduce Heat Islands			2
1.C8	❑ Light Pollution Reduction			1
1.C9	❑ Optimize Site Features			1
1.C10	❑ Facility Impact			2
1.C11	❑ Site Ecology			1
2.0	**Water Efficiency (W)**	**Score**	**0**	**Max 5**
2.C1	❑ Water Efficient Landscaping			2
2.C2	❑ Innovative Wastewater Technologies			1
2.C3	❑ Water Use Reduction			2
3.0	**Energy and Atmosphere (E)**	**Score**	**0**	**Max 28**
3.R1	❑ Fundamental Building Systems Commissioning			[Required]
3.R2	❑ Minimum Energy Performance			[Required]
3.R3	❑ CFC Reduction in HVAC&R Equipment			[Required]
3.C1	❑ Optimize Energy Performance			20
3.C2	❑ Renewable Energy			4
3.C3	❑ Additional Commissioning			1
3.C4	❑ <<Deleted>>			
3.C5	❑ Measurement and Verification			1
3.C6	❑ Green Power			1
3.C7	❑ Distributed Generation			1
4.0	**Materials and Resources (M)**	**Score**	**0**	**Max 13**
4.R1	❑ Storage & Collection of Recyclables			[Required]
4.C1	❑ Building Reuse			3
4.C2	❑ Construction Waste Management			2
4.C3	❑ Resource Reuse			2
4.C4	❑ Recycled Content			2
4.C5	❑ Local/Regional Materials			2
4.C6	❑ Rapidly Renewable Materials			1
4.C7	❑ Certified Wood			1
5.0	**Indoor Environmental Quality (IEQ) [Q]**	**Score**	**0**	**Max 17**
5.R1	❑ Minimum IAQ Performance			[Required]
5.R2	❑ Environmental Tobacco Smoke (ETS) Control			[Required]
5.C1	❑ IAQ Monitoring			1
5.C2	❑ Increase Ventilation Effectiveness			1
5.C3	❑ Construction IAQ Management Plan			2
5.C4	❑ Low-Emitting Materials			4
5.C5	❑ Indoor Chemical and Pollutant Source Control			1
5.C6	❑ Controllability of Systems			2
5.C7	❑ Thermal Comfort			2
5.C8	❑ Daylight and Views			2
5.C9	❑ Acoustic Environment /Noise Control			1
5.C10	❑ Facility In-Use IAQ Management Plan			1

Facility Points Summary (Continued)

				Maximum Points
6.0	**Facility Delivery Process (P)**	Score	0	Max 7
6.C1	❑ Holistic Delivery of Facility			7
7.0	**Current Mission**	Score	0	Max 6
7.C1	❑ Operation and Maintenance			3
7.C2	❑ Soldier and Workforce Productivity and Retention			3
8.0	**Future Missions**	Score	0	Max 4
8.C1	❑ Functional Life of Facility and Supporting Systems			2
8.C2	❑ Adaptation, Renewal and Future Uses			2

Total Score 0 Max 100

SPiRiT Sustainable Project Certification Levels

SPiRiT Bronze		25 to 34 Points
SPiRiT Silver		35 to 49 Points
SPiRiT Gold		50 to 74 Points
SPiRiT Platinum		75 to 100 Points

Project Points of Contact

SPiRiT Comment Sheet

Please forward any comments that you may have on this Sustainable Project Rating Tool, preferably by Email, to:

Mr. Harry Goradia
U. S. Army Corps of Engineers
ATTN: CEMP-ET
441 G Street NW
Washington, DC 20314
Phone (202) 761-7170, FAX (202) 761-0633
Email harry.goradia@hq02.usace.army.mil

SPiRiT Para.

APPENDIX E

SPiRiT REQUIREMENTS AND SUMMARY TABLE

Appendix E
Spirit Requirements and Summary Table

PAR	SPIRIT Requirements and Summary Table FEATURE	Maximum Points Possible	Mandatory Points in RFP	Proposal Points	REMARKS
1.R1	Sediment/Erosion Control Plan	R	R	R	RFP Requirement
1.C1	Avoid undesirable sites	1	0		N/A
	Site adjacencies/compatibility	1	0		
1.C2	Increase density	1	0		
	Minimize new infrastructure	1	0		
1.C3	Brownfield	1	0		
1.C4	Proximity to transit systems	1	0		
	Bike racks & showers	1	0		
	Proximity to alternative fuel station	1	0		
	Parking capacity, carpool parking	1	0		
1.C5	Limited site disturbance, restoration	1	0		
	Reduced footprint	1	0		
1.C6	Stormwater runoff rate	1	1	1	RFP Requirement
	Stormwater treatment	1	0		
1.C7	Reduce site heat island	1	0		
	Reduce roof heat islands	1	0		N/A
1.C8	Reduce light pollution	1	0		
1.C9	Optimize site features	1	0		
1.C10	Cluster facilities	1	0		N/A
	Mitigate offsite impacts	1	0		N/A
1.C11	Site Ecology	1	0		
2.C1	High efficiency irrigation/recycle site water	1	0		N/A
	no irrigation	R	R	R	RFP Requirement
2.C2	Innovative wastewater technologies	1	0		
2.C3	20% Water use reduction	1	0		
	30% Water use reduction	1	0		
3.R1	Building commissioning	R	R	R	RFP Requirement
3.R2	Minimum energy performance	R	R	R	RFP Requirement
3.R3	CFC Reduction	R	R	R	RFP Requirement
3.C1	Optimize energy performance	20	0		
3.C2	5% Onsite renewable energy	1	0		
	10% Onsite renewable energy	2	0		
	15% Onsite renewable energy	3	0		
	20% Onsite renewable energy	4	0		
3.C3	Additional commissioning	1	0		
3.C5	Measurement and verification	1	0		
3.C6	Green powered	1	0		N/A
3.C7	Distributed generation	1	0		N/A

NOTE: SEE SPIRIT TEXT FOR FULL DESCRIPTION OF REQUIREMENTS FOR EACH ITEM. COMPLIANCE IS REQUIRED IF "R" OR A NUMBER GREATER THAN ZERO APPEARS IN THE MANDATORY POINTS COLUMN.

APPENDIX F

SUBSURFACE EXPLORATION AND GEOTECHNICAL ENGINEERING REPORT (PRELIMINARY)

SUBSURFACE EXPLORATION
AND
GEOTECHNICAL ENGINEERING REPORT
(PRELIMINARY)

MARINE CORPS RESERVE CENTER
L.I. 955, FY-03
Hunter Army Airfield, Georgia

By
Soils Section
Geotechnical & HTRW Branch
U.S. Army Engineer District, Savannah

15 April 2003

TABLE OF CONTENTS

SUBJECT	PAGE
1. PURPOSE	1
2. QUALIFICATION OF REPORT	1
3. PROJECT DESCRIPTION	1
4. EXPLORATION PROCEDURES	2
a. Site Reconnaissance	2
b. Field Exploration	2
c. Laboratory Soils Testing	3
5. SITE AND SUBSURFACE CONDITIONS	3
a. Site Description	3
b. Area and Site Geology	4
c. Subsurface Conditions	4
d. Groundwater Conditions	4
6. ENGINEERING EVALUATIONS AND RECOMMENDATIONS	4
a. General	5
b. General Site Preparation	5
c. Foundation Design and Construction	5
d. Site Classification for Seismic Design	6
e. Concrete Slabs-on-Grade	6
f. Groundwater Considerations	6
g. Structural Fill	6
h. Construction Quality Control Testing	7

APPENDIX

One-Point and Two-Point Compaction Methods

SUBSURFACE EXPLORATION AND GEOTECHNICAL ENGINEERING REPORT (PRELIMINARY)

MARINE CORPS RESERVE CENTER
L.I. 955, FY-03
Hunter Army Airfield, Georgia

15 April 2003

1. PURPOSE. The Government has conducted a preliminary geotechnical investigation for the proposed project. This report provides an overview of the site conditions, including subsurface soil and groundwater conditions, and preliminary recommendations pertaining to the geotechnical design and construction of the project.

2. QUALIFICATION OF REPORT. The field explorations performed for this report were made to determine the subsurface soil and groundwater conditions and were not intended to serve as an assessment of site environmental conditions. No effort was made to define, delineate, or designate any areas of environmental concern or of contamination. Any recommendations regarding drainage and earthwork construction are made on the basis that such work can be performed in accordance with applicable laws pertaining to environmental contamination.

3. PROJECT DESCRIPTION. The project consists of the design and construction of a new Marine Corps Reserve Training Center to support the 2nd Beach and Terminal Operations Company (2nd BTO), located at Hunter Army Airfield, Georgia.

The new Marine Corps Reserve Center will be approximately 2.7 acres and the POV parking area will be another 2.7 acres on the opposite side of Leonard Neal Street. The new Marine Corps Reserve Center will have one large building containing space for administrative areas, drill hall, supply areas, paraloft and other peripheral spaces. This building will be located on the property between Leonard Neal Street and the cemetery.

POV parking for the new Marine Corps Reserve Center will be located across Leonard Neal Street from the center. There will be a maximum of 250 marines occupying this facility on a drill weekend. POV parking is required for 200 parking spaces at a minimum.

A separate vehicle maintenance facility (VMF) will be located on the north side of the Marine Corps Reserve Center building. Due to site space constraints, there is not room for the vehicle maintenance facility to be a drive-through facility. Instead, vehicles must drive in and then back out of the bays of the VMF. Tactical vehicle parking is required and will be located adjacent to the VMF. The tactical vehicle parking area will be concrete pavement and will be enclosed as a compound with security fencing. Vehicles

will enter this compound via a 24-foot wide access drive, and will drive through the compound to get to the VMF.

Since the project will be constructed under a design/build contract, detailed structural information for the proposed buildings is unavailable. However, some of the pertinent design features are as follows: The new Marine Reserve training building will be a steel-framed structure with brick veneer, split faced CMU and metal siding, concrete foundation and floors, and standing seam metal roof. The exterior wall will be load bearing reinforced concrete masonry with brick veneer. Columns will be steel wide flange shapes. The proposed floor system is a composite steel beam and slab construction. The slab system is 6-½ inches thick, being comprised of 4-1/2 inches of regular weight concrete over a 2 inch deep steel composite deck.

The vehicle maintenance building will be a one-story, high-bay, steel framed structure with brick veneer (pre-engineered metal building with split faced CMU walls to 8 feet high with metal siding); concrete foundation and floor; and standing seam metal roof.

The paraloft building will be contained within a two-story, steel framed structure with brick veneer; split faced CMU and metal siding. The construction of this project will provide anti-terrorism force protection features. The building systems are to meet national building and fire codes as well as all military design and technical requirements.

4. EXPLORATION PROCEDURES.

a. Site Reconnaissance. Prior to the field exploration, the site and surrounding areas were visually inspected by a geotechnical engineer. The observations were used in planning the exploration, in determining areas of special interest, and in relating site conditions to known geologic conditions in the area.

b. Field Exploration.

(1) Subsurface conditions at the Marine Corps Reserve Center were explored by eleven soil test borings (designated B-1 through B-11) drilled at the approximate locations shown on the Boring Location Plan included in the drawings with this RFP. Depths of the borings ranged from 5 to 25 feet below existing ground surface.

(2) Boring locations were established in the field by an engineer by measuring distances and estimating right angles from existing buildings, roads, sidewalks, and other features. Since the measurements were not precise, the locations shown on the boring location plan on the boring logs should be considered approximate.

(3) Geotechnical and Environmental Consultants (GEC) drilled the borings under contract to the Savannah District. The borings were drilled with a CME 55 drill rig using rotary wash boring methods. Split-barrel sampling with Standard Penetration Testing (SPT) was performed in the borings at intervals shown on the boring logs. Soil sampling

and Standard Penetration Testing (SPT) were in substantial accordance with ASTM D 1586. In the Standard Penetration Test (SPT), a soil sample is obtained with a standard 1½ inch I.D. by 2 inches O.D. split-barrel sampler. The sampler is first seated 6 inches and then driven an additional 12 inches with blows from a 140 pound hammer falling a distance of 30 inches. The number of blows required to drive the sampler the final 12 inches is recorded and is termed the "standard penetration resistance", or the "N-value". Penetration resistance, when properly evaluated, is an index of the soil's strength, density, and foundation support capability. Groundwater levels were measured in the boreholes at about 24 hours after drilling.

(4) Representative portions of the soil samples taken in the field were sealed in airtight containers and delivered to the Savannah District office where an engineer examined them to confirm the driller's field classifications. Classification of the soil samples was performed in general accordance with ASTM D 2488 (Visual-Manual Procedure for Description of Soils). The soil classifications include the use of the Unified Soil Classification System described in ASTM D 2487 (Classification of Soils for Engineering Purposes). Since the soil descriptions and classifications are based on visual examination, they should be considered approximate.

(5) Soil boring logs graphically depicting soil descriptions, standard penetration resistances, and observed groundwater levels are shown on the drawings with this RFP.

c. Laboratory Soils Testing. Fifteen of the samples were selected for grain-size distribution and/or Atterberg limits testing. The purpose of the laboratory testing was to aid in our evaluation of the subsurface soils and in confirming the field classifications. The laboratory tests were performed in substantial accordance with applicable ASTM standards. Results of the laboratory testing are shown on the drawings included with this RFP.

5. SITE AND SUBSURFACE CONDITIONS.

a. Site Description

The proposed site for the new Marine Corps Reserve Center is bounded on the east side by an existing cemetery, on the south by the existing water tower and North Lightning Road, on the north side by the existing Automotive Shop, and on the west side by an existing drainage ditch and Leonard Neal Street.

Topography at the Marine Reserve Center site ranges in elevation from 42 feet MSL on the north side to 38 feet MSL on the south side. The parking lot elevation varies from 30 feet MSL on the northwest side to 38 feet MSL on the southeast side. The topography at the site in general varies from 42 feet MSL along North Lightning Road, to 30 feet MSL at the top of bank of the existing ditch on the northwest side of the site. The site gradually slopes between these elevations.

Existing vegetation at the site is typical of vegetation found in the region. There are some pine trees near the south side of the site, and few pines and palm trees to the north side of the site along the fence to the Automotive Shop, but otherwise the site is relatively clear.

There is an existing asphalt pavement drive and an old building foundation on the site that must be removed.

b. Area and Site Geology.

Hunter Army Airfield is located near the eastern edge of the South Atlantic Coastal Plain. In South Carolina and Georgia, this broad, gently sloping region extends southeastward from the Fall Line (Columbia-Augusta-Macon-Columbus) to the Atlantic Ocean. The soils encountered are predominantly sedimentary in origin and consist of layered marine deposits of sands, silts and clays. The deposits have since been subjected to successive erosion and re-deposition by fluctuations of sea levels, storm tides and winds. Many of the surface sands are the result of depositional forces along ancient beaches which formed during the changing shoreline and river conditions. Intermittent deposits of shells occur within the strata at irregular intervals.

c. Subsurface Conditions.

(1) The soils encountered in the borings drilled at the project site are typical coastal plain sediments. Below the topsoil, which is generally only a few inches thick, the soil profile is rather homogeneous, consisting primarily of silty sand to the termination depths of the borings. A layer of sandy clay ranging in thickness from 4 to 7 feet was encountered in borings B-1, B-3, B-5, and B-8 at depths of 16 to 19 feet. The preponderance of the standard penetration resistances, or N-values, in the silty sand ranged from 4 to 12, indicating loose to medium dense sand.

(2) The above subsurface description is of a generalized nature to highlight the major subsurface stratification features and material characteristics. The boring logs shown on the drawings should be reviewed for specific information at individual boring locations. The stratifications shown on the boring logs represent the conditions only at the actual boring locations. Variations may occur and should be expected between boring locations. The stratifications represent the approximate boundary between the subsurface materials; the actual transition may be gradual.

d. Groundwater Conditions. Water levels were measured during drilling and again at 24 hours after completion of drilling in those boreholes not immediately backfilled. Groundwater was encountered from about 4 to 6 feet below existing grade. Groundwater depths or elevations shown on the boring logs represent groundwater encountered on the dates shown. Absence of groundwater data for certain borings implies that no data is available, but does not necessarily mean that groundwater will not be encountered at the locations of those borings. Groundwater levels will fluctuate with seasonal and climatic variations, variations in subsurface soil conditions, and construction operations. Therefore, groundwater conditions in the future, and at other locations on the

site, may differ from the conditions encountered at the boring locations, on the dates the borings were performed.

6. ENGINEERING EVALUATIONS AND RECOMMENDATIONS.

a. General. The following conclusions and recommendations are based on the information available on the proposed structure, observations made at the project site, interpretation of the data obtained from the soil test borings, and our experience with soils and subsurface conditions similar to those encountered at the site. Since the test borings represent a very small statistical sampling of the subsurface conditions, it is possible that subsurface conditions substantially different from those indicated by the test borings could be encountered during the construction. In such instances, adjustments to the design and construction of the proposed structures might be necessary, depending on the actual conditions.

b. General Site Preparation. The demolition of concrete and asphalt pavements, old foundations, fencing and site utilities will be required to prepare the site for construction. Following demolition, clearing and removal, the construction areas should be grubbed and stripped of all vegetation, topsoil, organics, remnants of foundations and other deleterious materials. Clean topsoil can be stockpiled and reused in landscaped areas. It is recommended that the zone of stripping extend a minimum of 10 feet beyond the outer edges of the structure and pavement. Any existing utilities in construction areas should be located and rerouted, as necessary.

c. Foundation Design and Construction.

(1) Given the proposed site and the proposed structure, it is our opinion that shallow spread foundations can be used for support of the proposed building. However, it should be noted that the borings performed within and near the building area indicate that the near-surface soils are very loose to loose sands. Depending on the structural loads, it may be necessary to provide some form of ground modification or foundation improvement system to ensure an adequate level of protection against structural failure due to excessive uniform and/or differential settlement or bearing failure. All that may be necessary is to undercut the loose subgrade soils and backfill the excavated area with properly compacted structural fill.

(2) Footings should be supported on the natural in situ soils or on properly compacted structural fill. Column footings and load-bearing wall footings should have minimum dimensions of 30 and 24 inches, respectively, and should be located at a minimum depth of 24 inches below finish floor or finish grade, as appropriate. Non load-bearing wall footings should have a minimum width of 18 inches and should be located at a depth of 18 inches below finish floor or finish grade, as appropriate.

(3) Foundation excavations should be concreted as soon as practical following excavation. Exposure to the environment could weaken the soils at the footing bearing level should the foundation excavations remain open for an extended period of time. Bottoms of foundation excavations should be inspected immediately prior to placement of reinforcing steel and concrete to verify that adequate bearing soils are present and that all debris, mud, and loose, frozen or water softened soils are removed. If the bearing surface soils have been softened by surface water intrusion or by exposure, the softened soils must be removed to firm bearing, and replaced with additional concrete during the concreting, or replaced to design subgrade with No. 57 or No. 67 stone, compacted to a non-yielding condition. To minimize the exposure, the final excavation (4 to 6 inches) to design subgrade could be delayed until just prior to placement of reinforcing steel and concreting. Foundation excavations must be maintained in a drained/dewatered condition throughout the foundation construction process.

d. Site Classification for Seismic Design. The project site should be classified as Site Class D for the purpose of determining maximum considered earth spectral response accelerations S_{MS} and S_{MI} in accordance with "NEHRP" Recommended Provisions for Seismic Regulations for New Buildings and Other Structures," 1997 Edition.

e. Concrete Slabs-On-Grade.

(1) Based upon our past experience and the subsurface conditions encountered at the site, concrete floor slabs can be supported on densified in situ soils or on fill soils placed and compacted in accordance with the recommendations presented in this report regarding structural fill. We recommend that all concrete slabs-on-grade in inhabitable areas, including storage areas, be underlain by a minimum of 4 inches of open graded, washed pea gravel, or stone, often termed "capillary water barrier," to prevent the capillary rise of groundwater. Nos. 57, 67, 78, or 89 stone could be used. We also recommend that a moisture vapor barrier consisting of lapped polyethylene sheeting having a minimum thickness of 6 mils be provided beneath the building floor slabs to reduce the potential for slab dampness from soil moisture. Concrete slabs should be jointed around columns and along supported walls to minimize cracking due to possible differential movement.

(2) Construction activities and exposure to the environment often cause deterioration of the prepared slab-on-grade subgrade. Therefore, we recommend that the slab subgrade soil be inspected and evaluated immediately prior to floor slab construction. The evaluation might include a combination of visual observations, hand rod probing and field density tests to verify that the subgrade has been properly prepared. If unstable soil is revealed, the affected soil should be removed to firm bearing, and replaced to design subgrade with suitable structural fill soil placed and compacted as recommended, or replaced with additional capillary water barrier material.

f. Groundwater Considerations. Water should not be allowed to collect near the foundation or on floor slab areas of the building either during or after construction.

Undercut or excavated areas should be sloped toward one corner to facilitate removal of any collected rainwater, groundwater, or surface runoff. Positive site drainage should be provided to reduce infiltration of surface water around the perimeter of the building and beneath the floor slabs.

g. Structural Fill. In order to achieve high density structural fill, the following evaluations and recommendations are offered:

(1) Based on the soil test borings, excavated on-site soils (excluding any organics and debris) can be used as structural fill. Some moisture content adjustment will probably be necessary to achieve proper compaction. If water must be added, it should be uniformly applied and thoroughly mixed into the soil by discing.

(2) We recommend that the contractor have appropriate disc harrows on site during earthwork for both drying and wetting the soils.

(3) Materials selected for use as structural fill should be free from roots and other organic matter, trash, debris, and frozen soil, and stones larger than 3 inches in any dimension. The following soils represented by their Unified Soil Classification System (ASTM D 2487) group symbols will be suitable for use as structural fill: GC, GM, SP, SW, SC, SM, and CL. The following soil types are considered unsuitable: Pt, OH, OL, GP, GW, ML, MH, and CH.

(4) Suitable fill soils should be placed in lifts of maximum 8 inches loose measurement. The soil should be compacted by mechanical means such as steel drum, sheepsfoot, tamping, or rubber-tired rollers. Compaction of clays is best accomplished with a sheepsfoot or tamping roller. Periodically rolling with heavily loaded, rubber-tired equipment may be desirable to seal the surface of the compacted fill, thus reducing the potential for absorption of surface water following a rain. This sealing operation is particularly important at the end of the workday and at the end of the week. Within confined areas or foundation excavations, we recommend the use of manually operated, internal combustion activated compactors (“wacker packers” or sled tamps). The compactors should have sufficient weight and striking power to produce the same degree of compaction that is obtained on the other portions of the fill by the rolling equipment as specified. Where hand operated equipment is used, the soils should be placed in lifts of maximum 4 inches loose measurement.

(5) We recommend the structural fill and subgrades be compacted to the following minimum percents of the modified Proctor maximum dry density (ASTM D 1557):

Beneath structures and building slabs, to 5 feet beyond building and structure line, around footings and in trenches	90 percent

Beneath paved areas, except top 12 inches	90 percent
Beneath paved areas, top 12 inches	95 percent
Beneath sidewalks and grassed areas	90 percent

h. Construction Quality Control Testing.

(1) Prior to initiating any structural fill placement and/or compaction operations, we recommend that representative samples of the soils which will be used as structural fill or subgrade, both suitable on-site soils and off-site soils (borrow), be obtained and tested to determine their classification and compaction characteristics. The samples should be carefully selected to represent the full range of soil types to be used. The moisture content, maximum dry density, optimum moisture content, grain-size and plasticity characteristics should be determined. These tests are required to determine if the fill and subgrade soils are acceptable and for compaction quality control of the subgrades and structural fill. Tests for the above soil properties should be in accordance with the following:

Moisture Content	ASTM D 2216
Maximum Dry Density and Optimum Moisture	ASTM D 1557
Grain-Size (Wash No. 200, less hydrometer)	ASTM D 422 and D 1140
Plasticity	ASTM D 4318

(2) A representative number of in-place field density tests should be performed in the subgrade of compacted on-site soils and in the structural fill and backfill to confirm that the required degree of compaction has been obtained. In-place density tests should be performed in accordance with the sand cone method prescribed in ASTM D 1556. We recommend at least one density test be performed for each 5000 square feet, or portion thereof, of compacted existing on-site soils, subgrades, and in <u>each</u> lift of compacted structural fill. We also recommend that at least one density test be performed for each 100 linear feet in the bearing level soils of continuous footings. Density tests should be performed at 200-foot intervals along roadway subgrade soils. In addition, a density test should be performed for each 150 linear feet of backfill placed per foot of depth in trenches for utilities systems. Where other areas are compacted separately by manually operated compactors, a minimum of one density test should be performed for every 250 square feet, or portion thereof, of fill placed per foot of depth.

(3) Compaction control of soils requires the comparison of fill water content and dry density values obtained in the field density tests with optimum water content and maximum dry density. The performance of a laboratory compaction test on material from each field density test would provide the most accurate relation of the in-place material to optimum water content and maximum density, but it is not feasible to do this as the testing could not keep pace with fill construction. We recommend that compaction control of the earthwork construction be performed using a “family” of compaction

curves and the one-point or two-point compaction methods. Excerpts from construction specifications, which describe the approach and its use, are included in the Appendix.

(4) Any area that does not meet the required compaction criteria should be reworked, and retested. If the moisture content of the soil is within the recommended range, additional compaction may be all that is necessary to increase the density. If the moisture content is not within the recommended range, then, the moisture content should be adjusted to within the range, and the area recompacted.

(5) All laboratory and field density testing should be performed by an approved commercial testing laboratory qualified in this type of work.

APPENDIX

One-Point and Two-Point Compaction Methods

Compaction Control

For fine grained (clayey and silty) soils and for sands with appreciable fines such that normal shaped compaction curves are obtained, results of all compaction tests shall be plotted on a common plot as a family of curves. For each field density test performed, a one-point compaction test, with additional points as needed, shall be performed on the same material on which the field density test was conducted. The one-point compaction test shall be performed on the dry side of the optimum moisture content. For comparison of field density data to the proper laboratory compaction test results, the procedures for the one-point and/or two-point compaction control methods as described in paragraph Compaction Procedure, shall be used. Compaction curves plotted on the family of curves shall be of such a scale that the optimum moisture content can be interpreted to the nearest 0.1 percent and the maximum dry density can be interpreted to the nearest 0.1 pcf(or 2 kg/m^3). When a one-point test plots outside the range of the family of curves, an additional five-point compaction test shall be performed.

Compaction Procedure

General

The following paragraphs describe methods of relating field density data to desired or specified values. Compaction control of soils requires comparison of fill water content and/or dry density values obtained in field density tests with optimum water content and/or maximum dry density. At a minimum, control shall be in accordance with the One-Point Compaction Method. Where conditions require, the Two-Point Compaction Method shall be used.

One-Point Compaction Method

The material from the field density test is allowed to dry to a water content on the dry side of estimated optimum, and then compacted using the same equipment and procedures used in the five-point compaction test. Thorough mixing is required to obtain uniform drying; otherwise, results obtained may be erroneous. The water content and dry density of the compacted sample are determined and then used to estimate its optimum water content and maximum dry density as illustrated in Figure 1 at the end of this section. In Figure 1, the line of optimums is well defined and the compaction curves are approximately parallel to each other, consequently, the one-point compaction method could be used with a relatively high degree of confidence. However, in Figure 2 at the end of this section, the curves are not parallel to each other and in several instances will cross if extended on the dry side. Consequently, the correct curve cannot be determined from the one-point method; therefore, the two-point compaction method should be used. The one-point method should be used only when the data define a relatively good line of optimums.

Two-Point Compaction Method

In the two-point test, one sample of material from the location of the field density test is compacted at the fill water content if thought to be at or on the dry side of optimum water content (otherwise, reduced by drying to this condition) using the same equipment and procedures used in the five-point compaction test. A second sample of material is allowed to dry back about 2 to 3 percentage points dry of the water content of the first sample and then compacted in the same manner. At least one point shall fall within 3 percent of the line of optimums. After compaction, the water contents and dry densities for the two samples are determined. The results are used to identify the appropriate compaction curve for the material being tested as shown in Figure 2 at the end of this section. The data shown in Figure 2 warrant the use of the two-point compaction test because the five-point compaction curves are not parallel. Using point A only, as in the one-point test method, would result in appreciable error as the shape of the curve would not be defined. The estimated compaction curve can be more accurately defined by two compaction points.

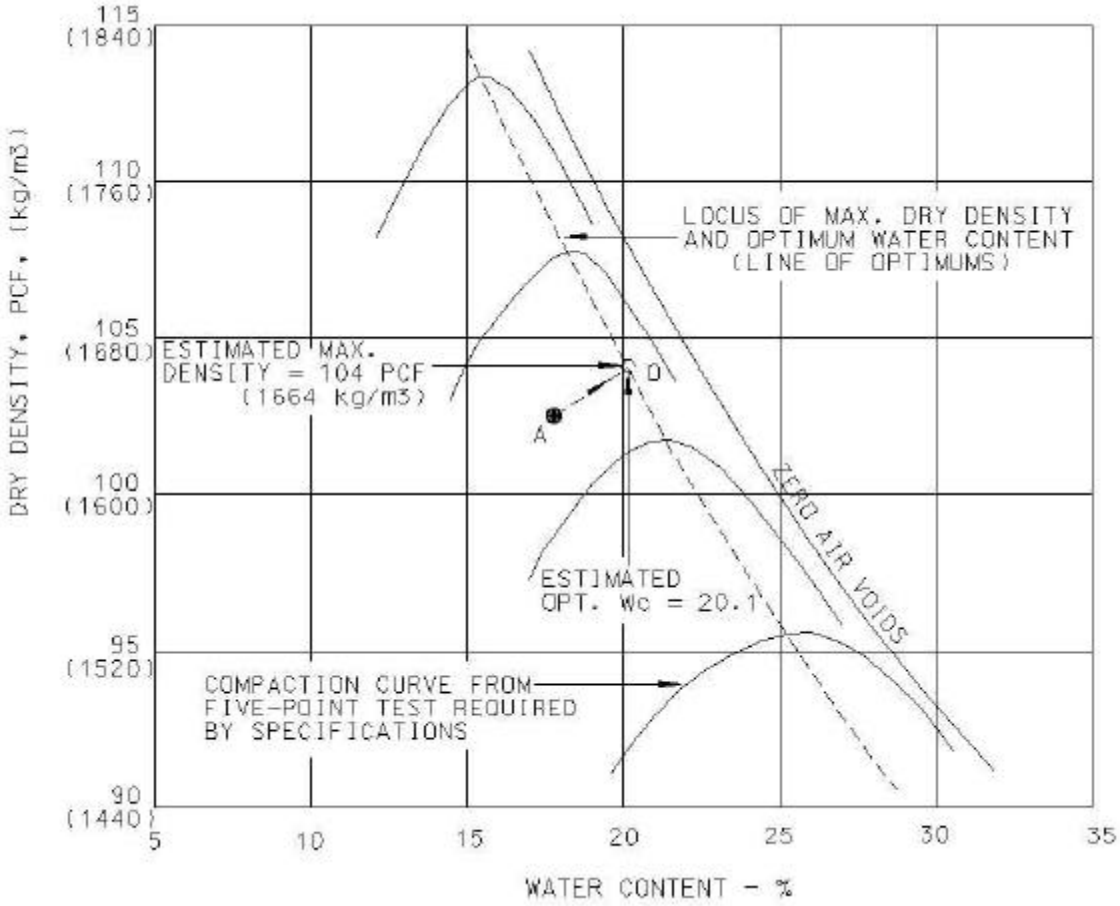

PROCEDURE:

1. Point A is the result of a one-point compaction test on material from field density test. This point must be on the dry side of optimum water content.

2. Point O is the estimated optimum water content and maximum density of the fill material based on a projection of point A approximately parallel to the adjacent compaction curves.

3. Point A must plot within 3 percent of the line of optimums.

Figure 1. Illustration of one-point compaction method.

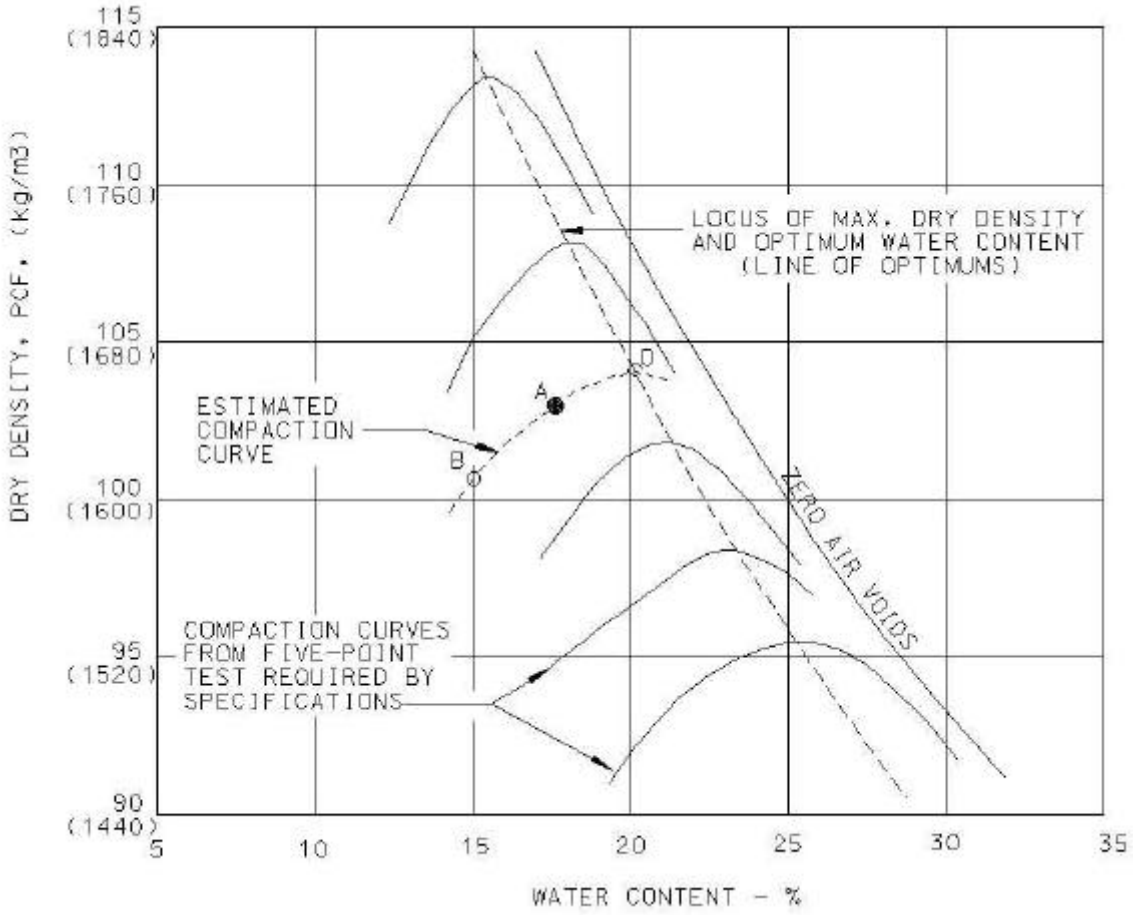

PROCEDURE:

1. Points A and B are results of a two-point compaction test on material from field density test. Points A and B must be on the dry side of optimum water content.

2. The estimated compaction curve based on Points A and B establishes Point O on the locus, which is the estimated maximum dry density and optimum water content of the fill material.

3. One point must plot within 3 percent of the line of optimums.

Figure 2. Illustration of two-point compaction method.

MARINE CORPS RESERVE CENTER DACA21-03-R-0015
HUNTER ARMY AIRFIELD, GEORGIA

APPENDIX G

FINISH REQUIREMENTS SCHEDULE

ROOM FINISH SCHEDULE

Space	Floor	Base	Walls	Wains	Ceiling	Ceiling Height	Remarks
Administrative First Floor							
S -1	Carpet	Vinyl	PGB		ATC	9'-0"	
Admin Chief Office	Carpet	Vinyl	PGB		ATC	9'-0"	
Active 1st Sergeant	Carpet	Vinyl	PGB		ATC	9'-0"	
I & I	Carpet	Vinyl	PGB		ATC	9'-0"	
Medical Office	Carpet	Vinyl	PGB		ATC	9'-0"	
Medical Examination Room	CWHS	Vinyl	PGB		ATC	9'-0"	
Medical Storage	CWHS	Vinyl	PGB		ATC	9'-0"	
Communications Maintenance	CWHS	Vinyl	PGB		ATC	9'-0"	
Communications Battery Storage	CWHS	Vinyl	PCMU/PGB		ATC	9'-0"	
S - 3	Carpet	Vinyl	PCMU/PGB		ATC	9'-0"	
S - 4	Carpet	Vinyl	PCMU/PGB		ATC	9'-0"	
TMO	Carpet	Vinyl	PCMU/PGB		ATC	9'-0"	
NMCI - Secured	VCT	Vinyl	PCMU/PGB		ATC	9'-0"	
NMCI - Unecured	Carpet	Vinyl	PCMU/PGB		ATC	9'-0"	
Toilet - Male	CT	CT	PCMU/CT		ATC	9'-0"	
Toilet - Female	CT	CT	PCMU/CT		ATC	9'-0"	
Electrical Room - 1st floor	CWHS		PCMU		Exposed		
Comm. Room - 1st floor	CWHS		PCMU		Exposed		
Toilet / Shower - Male	CWHS		PCMU/PGB		MRATC	9'-0"	Non-Skid for Floors and Walls
Toilet / Shower - Female	CWHS		PCMU		MRATC	9'-0"	Non-Skid for Floors and Walls
Lockers - Male	CWHS		PCMU/PGB		MRATC	9'-0"	Non-Skid for Floors and Walls
Lockers - Female	CWHS		PCMU/PGB		MRATC	9'-0"	Non-Skid for Floors and Walls
Drill Hall	CWHS		PCMU		Exposed		
Janitor Room	CT	CT	PGB		ATC	9'-0"	
Mechanical Room 1 - 1st floor	CWHS		PCMU		Exposed		
Corridor 1	Carpet	Vinyl	PCMU/PGB		ATC	10'-0"	
Stair 1	CWHS		PCMU				
Stair 2	CWHS		PCMU				
Storage First Floor							
Supply Room	CWHS		PCMU		Exposed		
Supply Office	Carpet	Vinyl	PCMU		ATC	9'-0"	
NBC	CWHS		PCMU		ATC	9'-0"	
Armory / Security Vault	CWHS		PCMU				Painted Solid Ceiling
HST Storage	CWHS		PCMU		Exposed		

Parachute Maintenance & Storage - First Floor							
Maintenance and Inspection	CWHS		PCMU			10'-0"	Solid Ceiling
Packing Lines	CWHS		PCMU		Exposed		
Inspection and Packaging	CWHS		PCMU		Exposed		
Tower	CWHS		PCMU		Exposed		
Pallet Storage	CWHS		PCMU		Exposed		
Unisex Head	CT	CT	PGB		ATC	9'-0"	
Tool Storage	CWHS		PCMU		Exposed		
Misc Storage	CWHS		PCMU		Exposed		
Cargo Packs / Medium Packs	CWHS		PCMU		Exposed		
Main Packs / Small Packs	CWHS		PCMU		Exposed		
Mechanical - 2	CWHS		PCMU		Exposed		
Corridor 2	CWHS		PCMU		Exposed	10'-0"	
Vehicle Maintenance Facility - First Floor							
VMF Bay	CWHS/white		PCMU		Exposed		
Motor T	CWHS		PCMU		ATC	9'-0"	
PUBS	CWHS		PCMU		ATC	9'-0"	
Unisex Head	CT	CT	PGB		ATC	9'-0"	
Heavy Equipment	CWHS		PCMU		ATC	9'-0"	
Parts	CWHS		PCMU			10'-0"	
Tool Room	CWHS		PCMU		Exposed		
Battery Storage	CWHS		PCMU		Exposed		
Administrative - Second Floor							
Classroom 1 & 2	CWHS		PGB		ATC	10'-0"	
Conference Room	Carpet		PGB		ATC	9'-0"	
Lounge	Carpet		PGB		ATC	9'-0"	
Recruiting	Carpet		PGB		ATC	9'-0"	
ISMT	CWHS		PCMU		ATC	10'-0"	
Reserve Platoon	Carpet		PGB		ATC	9'-0"	
Training Aids	Carpet		PGB		ATC	9'-0"	
PWST	Carpet		PGB		ATC	9'-0"	
Reserve 1st Sergeant	Carpet		PGB		ATC	9'-0"	
Reserve CO	Carpet		PGB		ATC	9'-0"	
Reserve XO	Carpet		PGB		ATC	9'-0"	
Toilet - Male	CT	CT	PCMU/CT		ATC	9'-0"	
Toilet - Female	CT	CT	PCMU/CT		ATC	9'-0"	
Electrical Room - 2nd floor	CWHS		PCMU		Exposed		
Comm. Room - 2nd floor	CWHS		PCMU		Exposed		
Corridor	CWHS		PCMU		Exposed	10'-0"	

ABBREVIATIONS LEGEND:

ATC	ACOUSTIC TILE CEILING
CT	CERAMIC TILE
PCMU	PAINTED CONCRETE MASONRY UNITS
PGB	PAINTED GYPSUM BOARD
MRATC	MOISTURE RESISTENT ACOUSTIC TILE CEILING
CWHS	CONCRETE WITH HARDNER AND SEALER

APPENDIX H

INTERIOR DESIGN PRESENTATION FORMAT

US Army Corps
of Engineers
Savannah District

Interior Design Presentation Format

February 1999

U.S. ARMY ENGINEER DISTRICT, SAVANNAH
CORPS OF ENGINEERS
100 WEST OGLETHORPE AVENUE
SAVANNAH, GEORGIA 31401-3640

THE SAVANNAH DISTRICT'S MANUAL
FOR INTERIOR DESIGN PRESENTATION

SECTION	TITLE	PAGE
	PREFACE	2
	GOVERNMENT CONTRACTING TERMS	3-7
	PRESENTATION FORMAT	
1.	GENERAL NOTES	8
2.	TECHNICAL NOTES	9
3.	SIGNAGE	9-11
4.	SID/CID SUBMITTAL REQUIREMENTS	12-13
5.	SUBMITTAL MATRIX SUMMARY	14-16
6.	CID FURNISHINGS AND COST GUIDELINES	17-19
7.	PREWIRED AND SYSTEMS FURNITURE	19
8.	MANUFACTURER'S SUMMARY LIST	19
9.	FURNITURE LOCATION CODES	20
10.	FURNITURE ILLUSTRATION SHEET	20
11.	FURNITURE PLACEMENT PLAN	20
12.	ARTWORK SHEETS	21
13.	FURNITURE COST ESTIMATE	21
14.	ORDER FORMS	21
15	LETTER OF WAIVER	22
16.	HEALTH AND SAFETY	22
17.	CHECKLIST FOR SID	24-28
18.	CHECKLIST FOR CID	28-29
19.	LESSONS LEARNED	29-36
20.	SID/CID ILLUSTRATIONS	
	APPENDICES	
	A: ADA REQUIREMENTS	
	B: COMMANDERS' POLICY	
	C: UNICOR WAIVER	

THE SAVANNAH DISTRICT'S MANUAL
FOR INTERIOR DESIGN PRESENTATION FORMAT

A. This format is required in accordance with THE SAVANNAH DISTRICT DESIGN MANUAL section 10.8.9. And is developed in accordance with Air Force and Army interior design requirements for SID/CID submittals.

B. SID/CID PACKAGES RUN CONCURRENT WITH THE ARCHITECTURAL SUBMITTALS.

C. "Checklists for Reviews" and "Lessons Learned" are to be used to ensure all required information is included in the Contract Documents, the SID/CID presentation binders and to achieve customer satisfaction.

D. The General Contractor will not be receiving the 8 ½" X 11" SID/CID binders. Verify that all graphic illustrations such as carpet borders, ceramic tile patterns, accent color placement, millwork details and prewired furniture finished and details are on the contract drawings.

E. DO NOT REFERENCE THE SID/CID BINDERS IN THE CONTRACT DOCUMENTS.

F. THIS INFORMATION IS NOT OPTIONAL WHEN PRESENTING A SID/CID SUBMITTAL FOR REVIEW and FINAL DESIGN.

G. The Interior Design Point of Contact for the Savannah District is:

U.S. Army Corps of Engineers
ATTN: EN-DA/Peggy Roberson
100 W. Oglethorpe Avenue
Savannah, GA 31402-0889
COMM (912) 652-5544 FAX (912) 652-5891

GOVERNMENT CONTRACTING TERMS

ARMY	AIR FORCE	DEFINITION
MCA	**MILCON**	**MILITARY CONSTRUCTION** funds appropriated by Congress for new construction-fixed price contracts.
OMA	**O & M**	**OPERATION** AND **MAINTENANCE** funds provided to each installation by the Major Command and used for the day to day operations of the installation. These funds may be used for the renovation of existing buildings or for the purchase of furniture. Funds not spent to award a contract disappear at the end of the FY and cannot be recovered.
FY	**FY**	**FISCAL YEAR:** (A) October 1 through September 30 per the calendar. **(B)** If the project title begins with "FY- . ." This identifies the year Congress will fund the construction Contract Award.
PD	**PD**	**PROJECT DEFINITION:** A conceptual design of the proposed project (floor plans, elevations, cost estimate).
DD FORM 1391	**DD FORM 1391**	A programming document initiated by the installation; passed through the Major Command on to Congress for funding. The **1391** outlines basic needs for a proposed facility and an estimated cost to reach those needs.
JOC	**SABER**	**JOB ORDER CONTRACT OR SIMPLIFIED ACQUISITION OF BASE ENGINEERING REQUIREMENTS:** The installation's method to contract for repair work. Unit prices are agreed upon with a Contractor then individual job orders are negotiated for specific scopes of repair work.

GOVERNMENT CONTRACTING TERMS

ARMY	AIR FORCE	DEFINITION
CBD	**CBD**	**COMMERCE** AND **BUSINESS DAILY:** The federal government's "want ads". Advanced notice of contracting actions & requests for A-E Services.
IFB	**IFB**	**INVITATION FOR BID:** Standard contract procedures with clearly defined requirements, specifications and terms that are not negotiated. Any proposal prepared in response to an IFB must strictly adhered to the terms. Award is based on the lowest bid meeting the requirements and specifications.
RFP **RFQ**	**RFP** **RFQ**	A **REQUEST FOR PROPOSAL** is flexible in contrast to an IFB. It usually defines a problem and allows those who respond to the RFP to suggest a solution.
DESIGN BUILD	**DESIGN BUILD**	A **REQUEST FOR QUOTES** is an informal request for price for standard item. Using the RFP format, performance requirements are outlined; the Construction Contractor and A-E subcontractor are responsibility for the design of specifics to meet performance requirements.
APPENDIX A	**APPENDIX A**	The contractual scope of work for A-E contracts which outlines basic requirements includes specific deliverables and the schedule of design submittals.
SF 254 & 255	**SF 254 & 255**	**STANDARD FORMS** to provide resume information to the government regarding the qualifications of A-E's responding to a CBD announcement.

GOVERNMENT CONTRACTING TERMS

ARMY	AIR FORCE	DEFINITION
SID	**SID**	**STRUCTURAL INTERIOR DESIGN:** Building related finishes; funded with MCA or MILCON dollars; Building Materials and finishes are purchased and installed by the General Contractor; a submittal with samples of proposed building materials being used on a particular project.
CID	**CID**	**COMPREHENSIVE INTERIOR DESIGN:** Furniture related; funded with OMA or O & M dollars: a submittal with furniture illustrations, fabric & finish samples, footprint plans, and furniture ordering information. Purchased by the installation and not by the General Contractor.
PREWIRED WORKSTATION	**PREWIRED WORKSTATION**	**PREWIRED WORKSTATION** is the term used to identify systems furniture purchased with MCA or MILCON funds. The designers will coordinate the footprint plans with the buildings systems and provide the plans and specifications in the contact documents. The General Contractor will purchase and install this furniture.
SYSTEM FURNITURE	**SYSTEM FURNITURE**	**SYSTEMS FURNITURE** is the term used to identify systems furniture purchased with OMA or O& M dollars. The designer will coordinate the footprint plans with the Building systems and provide the plans in the contract documents for "information only. **'I** Procurement information will appear in the CID and will be purchased by the installation.

ARMY	AIR FORCE	DEFINITION
FAR	**FAR**	**FEDERAL ACQUISITION REGULATIONS:** The laws outlining how the government buys products and services. Title 18 of the U.S.Code allows for direct purchase from UNICOR without competitive bids. (FAR) 8.6 identifies UNICOR as a mandatory procurement source to all federal agencies for products that meet the requirements of the ordering office.
FSS	**FSS**	**FEDERAL SUPPLY SCHEDULES** provides indefinite quantity contracts for commercial items at established prices for direct ordering use by government agencies. Address: Furniture Commodity Center (3FN-CO): Crystal Mall 4, RM 403, Washington DC 20406 (703) 305-5056.
UNICOR	**UNICOR**	**UNICOR** is the trade name for the Federal Prison Industries Inc (FPI) a wholly owned government corporation est. in 1934. UNICOR provides a variety of products and services to the Federal Government.
GSA FSC/FSG	**GSA FSC/FSG**	**GENERAL SERVICES ADMINISTRATION** **FEDERAL SUPPLY CLASSES** **FEDERAL SUPPLY GROUPS** are government contracts with private manufacturers that are fixed price, fixed MOL and fixed dates of expirations. GSA CENTRALIZED MAILING LIST SERVICE (7CAFL); PO BOX 6477 FT. WORTH. TX 76115 (817) 334-5215

GOVERNMENT CONTRACTING TERMS

ARMY	AIR FORCE	DEFINITION
MOL	**MOL**	MAXIMDM **ORDER of LIMITATION:** **GSA** FSC/FSC contracts have a ceiling contract dollar amount that can be purchased from a vendor.
OPEN MARKET	**OPEN MARKET**	**OPEN MARKET** is the term indicating products that are not on a **GSA** contract.
ENVIRONMENTAL PRODUCTS GUIDE	**ENVIRONMENTAL PRODUCTS GUIDE**	**GSA** CATALOG SUPPLY ITEMS **GSA** CENTRALIZED MAILING LIST SERVICE (7CAFL); PO BOX 6477 FT. WORTH, TX 76115 (8x7) 334-5215
FSN 595B	**FSN 595B**	**FEDERAL STANDARD NUMBER 595B A** Collection of standard colors used by the various departments or agencies.. Colors have been classified in three categories: 1 is full gloss, 2 is semi gloss and 3 is flat.
FSN 595B FAN DECK	**FSN 595B FAN DECK**	Standard colors are available in a booklet for under **$10.00.** Order number NSN 7690-01-162-2210 **GSA** Specification Unit (3F-BP-W) Seventh and **D** Sts SW Washington DC 20407

INTERIOR DESIGN PRESENTATION FORMAT

GENERAL NOTES

1. DEFINITIONS:

1.1 STRUCTURAL INTERIOR DESIGN (SID): Structural Interior Design is the term referring to the building related finishes. A SID shall involve the selection and sampling of all applied finishes necessary to complete required, the SID shall also include all prewired workstation drawings and specifications. All SID information shall be presented in a 3-ring Binder, 8 ½ x 11″ format. The products sampled in the SID are to be purchased by the General Contractor and are MCA or MILCON funded.

1.2 COMPREHENSIVE INTERIOR DESIGN (CID): Comprehensive Interior Design is the term referring to the furniture related finishes. A CID shall involve the selection and sampling of all the furnishings components necessary to complete the interior environment. The CID shall generally include all free standing furnishings, accessories, Furniture Cost Estimate and generic Order Forms. The products illustrated in the CID are purchased by the installation and are OMA or O&M funded.

1.3 When a "CID Package" is required in the DD Form 1391 and/or the Appendix A, the A/E shall provide to the Government both the SID/ CID illustrated information in the required 8-1/2 X 11 format.

2 . TECHNICAL NOTES:

2.1 SPECIAL REQUIREMENTS: The Interior Designer shall identify items in the SID or CID that require attachment to the building either by cutting or fitting. The Designer must prepare specifications and drawings for this service to be performed.

2.2 DISCLAIMER: Guide Specification 09000 or 09915 Exterior/Interior Finish Schedule indicates all product trade names and colors used for the project. The nonproprietary declaimer indicated within this Guide Specification may also be located on the Finish Schedule of the Contact Drawings.

2.3 FEDERAL STANDARD 595b COLORS (FSN 595b): The use of the Federal Standard Colors is required when indicating exterior colors used on roofs and trim. The use of Federal Standard Colors is not required when indicating interior colors. EXCEPTION: Hurlburt Field, FL requires both exterior and interior paint colors to be indicated with the FSN 595b code.

2.4 CID FURNITURE RESOURCE: Every effort should be made to use UNICOR, GSA Stock or Federal Supply Schedule items. However, when the Interior Designer determines CID items available on FSS/GSA contract or from UNICOR do not meet the functional requirements or there is no current FSS/GSA/ UNICOR resource for a furniture requirement, a waiver to use an Open Market source is required. The Designer shall write a waiver/justification letter (Paragraph 15).

This letter shall be included in the CID Binder; attached to the required Order Form. The Government will process the waiver.

3. SIGNAGE:
Signage is critical to "pathway finding" and is to meet the requirements indicated in the American With Disabilities Act unless directed by the client to do otherwise.

Indicate on separate signage drawings the typical plaque sizes, types locations, and the message for all signage. Submit a sample of the signage color in the SID.

4. SID/CID SUBMITTAL REQUIREMENTS

4.1 The Interior Designer shall be involved in all phases of the design in order to ensure customer satisfaction.

4.2 REVIEWS: During each phase of the project all SID/CID Binders shall be reviewed by the Government with written and annotated comments being issued back to the A/E. This is done in Projnet/DrChecks. See the Savannah District Design Manual for further instructions on this Internet database. These annotated comments are to be incorporated into the next SID/CID Binder update. A printed hard copy of responses from the Interior Designer are to be included in the front inside pocket of the first volume of the SID Binder.

4.3 FORMAT: Submit all SID/CID information and samples on 8-1/2”x 11" color boards with a maximum spread of 25-1/2" for foldouts.
-
Each binder shall be labeled on the outside spine and front cover with the Phase %, SID or CID, Project title, Location, Date, and A/E firm. Indicate the volume number (example: Vol. 1 of 3).

Each sheet shall be labeled with the Date, Project Tile, Location, A/E firm.

4.3.1 The color boards shall support and anchor all samples. Anchor large or heavy samples with mechanical fasteners or with Velcro. Rubber cement or glue will not be acceptable.

4.3.2 Assemble the 8 1/2" x 11" pages and color boards in a 3-ring binder.

4.3.3 Material and finish samples must indicate true pattern, color and texture. Carpet samples must be large enough to indicate a complete pattern or design.

4.3.4 Photographs or colored photocopies of SID materials or CID fabrics will be disapproved. Color photocopies of artwork are accepted.

4.4 REVISIONS: The Interior Designer shall revise the binders after each review to satisfy review comments. Printed information on existing pages can be updated with "white-out" for cost effective reasons. If the binders are not returned to the A/E for in-house update, the A/E may provide updated inserts to the Government.

4.5 RENDERINGS: Verify that renderings are a contract requirement. All renderings shall be provided by a professional illustrator.

4.6 BLACK AND WHITE SKETCHES: Verify that B&W Sketches are a contract requirement. If they are required, emphasize space-relationships, furnishings, patterns and texture. One major area is to be illustrated and possibly used as a basis for the interior color rendering for the final design.

4.7 SEQUENCE: Organize the SID/CID Binder presentation according to the following sequence:

SEQUENCE OF SID SUBMITTAL

1. TITLE PAGE

2. TABLE OF CONTENTS

3. NARRATIVE OF INTERIOR DESIGN OBJECTIVES

4. EXTERIOR ELEVATION

5. EXTERIOR BUILDING MATERIAL LEGEND

6. EXTERIOR BUILDING MATERIAL COLOR BOARD

7. INTERIOR COLOR PLACEMENT PLAN
   (Half size drawing or 8 1/2" X 11")

8. INTERIOR COLOR BOARDS (according color placement plan)

9. INTERIOR SIGNAGE COLOR BOARDS

10. PREWIRED WORKSTATION COLOR BOARDS

11. INTERIOR FLOOR PLANS

12. ROOM FINISH SCHEDULES

13. SIGNAGE PLANS

14.PREWIRED WORKSTATION COMPOSITE FLOOR PLAN

15. PREWIRED WORKSTATION PANEL PLAN

16. PREWIRED WORKSTATION ELECTRICAL/VOICE/DATA PLAN

17. PREWIRED WORKSTATION ELEVATION AND INVENTORY DRAWINGS

SEQUENCE OF CID SUBMITTAL

18. TITLE PAGE

19. TABLE OF CONTENTS

20. NARRATIVE OF INTERIOR DESIGN OBJECTIVES

21. PHOTO OF INTERIOR COLOR RENDERING (only if required by contract)

22. BLACK AND WHITE SKETCH PERSPECTIVE(on1y if required by contract)

23. COMPOSITE FURNITURE PLANS WITH CONVENTIONAL AND SYSTEMS FURNITURE (full size sheet 1/8" scale. Note: provide all systems furniture plans in the contact drawings and indicate "for information only." This is only if the user is buying and installing the systems furniture. Drawing requirements are the same as indicated in items 11-15 of the SID Sequence.

24. MANUFACTURE'S SUMMARY LISTS

25. FURNITURE LOCATION CODE INDEX

26. CONVENTIONAL FURNITURE PLACEMENT PLANS (1/4" scale)

27. CONVENTIONAL FURNITURE ILLUSTRATION SHEETS

28. ARTWORK ILLUSTRATION SHEETS AND PLACEMENT PLAN

29. ITEMIZED FURNITURE COST ESTIMATE

30. INTERIOR FURNISHING ORDER FORMS

31. LETTER OF JUSTIFICATION FOR WAIVER

5. SID/CID SUBMITTAL MATRIX SUMMARY

INTERIOR DESIGN SUBMITTALS RUN CONCURRENT WITH ARCHITECTURAL SUBMITTALS

		DESIGN PHASE			
ITEM	DESCRIPTION	35%	65%	95%	100% RTA
1.	TITLE PAGE	X	X	X	X
2.	TABLE OF CONTENTS (SID)	X	X	X	X
3.	NARRATIVE (SID)	X	X	X	X
4.	EXTERIOR ELEVATIONS	X	X	X	X
5.	EXTERIOR MATERIAL LEGEND	X	X	X	X
6.	EXTERIOR COLOR BOARDS	X	X	X	X
7.	INTERIOR COLOR PLACEMENT PLAN	X	X	X	X
8.	INTERIOR COLOR BOARDS	X	X	X	X
9.	SIGNAGE COLOR BOARD	X	X	X	X
10.	WORKSTATION COLOR BOARDS	X	X	X	X
11.	INTERIOR FLOOR PLANS	X	X	X	X
12.	ROOM FINISH SCHEDULE	X	X	X	X
13.	SIGNAGE PLANS	X	X	X	X
14.	PREWIRED WORKSTATIONS COMPOSITE FLOOR PLAN	X	X	X	X
15.	PREWIRED WORKSTATION PANEL PLANS	X	X	X	X
16.	PREWIRED WORKSTATION ELECTRICAL/VOICE/DATA PLANS	X	X	X	X
17.	WORKSTATION ELEVATIONS AND INVENTORY DRAWINGS			X	X
18.	TITLE PAGE (CID)	X	X	X	X
19.	TABLE OF CONTENTS	X	X	X	X
20	NARRATIVE	X	X	X	X
21.	PHOTO OF PROPOSED RENDERING TECHNIQUE (APPROVAL NEEDED)	X			
21a.	FINAL INTERIOR RENDERING			X	X

5. Con't. SID/CID SUBMITTAL MATRIX SUMMARY

INTERIOR DESIGN SUBMITTALS RUN CONCURRENT WITH ARCHITECTURAL SUBMITTALS

		DESIGN PHASE			
ITEM	DESCRIPTION	35%	65%	95%	100% RTA
22.	BLACK AND WHITE SKETCHES (ONE SHALL BE APPROVED FOR THE INTERIIOR RENDERING)		X	X	X
23.	COMPOSITE AND SYSTEMS FURNITURE PLANS	X	X	X	X
24.	MANUFACTURER'S SUMMARY LIST			X	X
25.	FURNITURE LOCATION CODE (ONE MAJOR AREA)	X			
25A.	FURNITURE LOCATION CODES (ALL AREAS)		X	X	X
26.	FURNITURE PLACEMENT PLANS (ONE MAJOR AREA)	X			
26A.	FURNITURE PLACEMENT PLANS (ALL AREAS)		X	X	X
27.	FURNITURE INSTALLATION SHEETS (ONE MAJOR AREA)	X			
27A.	FURNITURE INSTALLATION SHEETS (ALL AREAS)		X	X	X
28.	ARTWORK ILLUSTRATION SHEETS (PUBLIC AREAS ONLY, ARTWORK NOT REQUIRED IN PRIVATE OFFICES).			X	X
29.	ITEMIZED COST ESTIMATE		X	X	X
30.	FURNITURE ORDER FORMS (ONE MAJOR AREA)	X			
30A.	FURNITURE ORDER FORMS (ALL AREAS)			X	X
31.	LETTERS OF JUSTIFICATION		X	X	X

6. TYPICAL CID FURNISHINGS AND COST GUIDELINES

6.1 CID FURNISHINGS

ADP tables/printer stands
Acoustical Partial Height Partitions 6' of less in height - freestanding
Artwork
Beds/wall units/ night stands/ chests/ refrigerators
Bedspreads/bedding
Bookcases
Bulletin board/ projection screens (If NOT attached to structure.)
Carts
Chairs - all kinds, including stools
Desks - freestanding
Drafting tables
Draperies
Files - all kinds
Library furniture - book stacks/card files/ study carrels
Modular desk units
Podium/ lecture stands
Systems furniture workstations (If not in SID)
Planters/art/waste & ash receptacles
Storage - all kinds
Tables - all kinds
Upholstered lounge seating (sofas, etc.)
Wardrobes

6.2 FURNISHINGS COST GUIDELINES

The figures are based on an Air Force FY 88 Costs Guide and an inflation factor of 5% per year should be included for subsequent years. These guidelines are for actual items (furniture, window treatments, accessories, etc.) and they do not include other associated cost such as contractor's overhead, profit and shipping.

Overseas Consideration: If local items are used prices may vary from country to country and may vary depending on the current exchange rates.

FACILITY TYPE	$/SOUARE FEET
.	
Administration Space (Conventional Furn)	$ 7.00 - $15.00
Administration Space (Systems Furn)	$33.00 - *
Airmen Club (Not incl kitchen equip)	$14.00
Alert Facilities	$12.00

Auditorium	$35.00
Base Ops DV Lounge	$18.00
Billeting Office	$15.00
Chief Suite (Billeting)	$17.00
Child Development Center	$13.00
Classroom	$20.00
Clinic/Dental Clinic (not incl equip)	$35.00
Conference Room	$18.00
Dining Facility (incl kitchen equip)	$35.00-$45.00
Dining Facility (not incl kitchen equip)	$15.00
DV Suite (Billeting)	$24.00
Flight .Training Center	$30.00
Family Housing Office	$14.00
Golf Clubhouse	$12.00
Intelligence Training Center	$30.00
Medical Training Center	$30.00
Package Store	$28.00
NC Officer Mess (Not incl Kitchen equip)	$17.00
Officer Open Mess (Not incl Kitchen equip)	$17.00
Recreation Center	$11.00
Transient Living Facility	$15.00
Unenlisted Personnel Housing	$16.00*

Visiting Airman Quarters	$13.00
Visiting Officers Quarters	$16.00*
Yacht Clubhouse	$12.00
Youth Center	$12.00

FACILITY TYPE	$/SOUARE FEET
*UNIT BUDGET GUIDES	
Admin Space (Systems Furn)	1994 price ($4,000/per workstation) incl install(ergo chair $350.00)
1988 Price	
Billeting Office/Lobby	$14,000-$16,000 refinish existing. $35.0000-50,000 for new
Distinguished Visitor Suite	$15,000 per one bedroom suite $20,000 per two bedroom suite $37,000 per 2/3 bedroom apartment
Transient Living Facility One Bedroom, Living/Dining 525 sq feet (new construction).	$15,000 per standard unit
Dorms Unaccompanied Enlisted	$2,500-$3,500 Per person
Personnel Housing	
UOPH	$ 7,000 per single unit
VAQ	$ 6,000 per double occupancy
VOQ	$ 5,000 per single occupancy $ 8,000 per single Suite $11,000 per double Suite

PARAGRAPHS 7-15 EXPLAIN THE FORMAT REOUIRED FOR THE FOLLOWING:

7. PREWIRED AND SYSTEMS FURNITURE WORKSTATIONS
8. MANUFACTURE'S SUMMARY LIST
9. FURNITURE LOCATION CODES
10. FURNITURE ILLUSTRATION SHEETS
11. FURNITURE PLACEMENT PLANS
12. ARTWORK
13. FURNITURE COST SUMMARY

14. ORDER FORMS
15. LETTER OF WAIVER JUSTIFICATION

7. PREWIRED AND SYSTEMS FURNITURE

7.1 General

Prewired and or systems furniture workstations shall be designed with generic components and work surfaces that are typically sold by various manufacturers of systems furniture. Indicate on the contract drawings one manufacture's name and finishes as a bases for design. This will provide a general of range colors for competitive bid purposes. Indicate in the Guide Specifications 12640 Prewired Workstations, the fabric width, fiber content, and construction method. DO NOT INDICATE A VENDOR IN THE SPECIFICATIONS. INDICATE A VENDOR ONLY ON THE DRAWINGS.

7.2. COMPOSITE FLOOR PLAN

A Composite floor plan shall show the all panels, components and free-standing furniture in relationship to the building and the building system-s such as light switches and mechanical devices.

7.3. PANEL PLAN

The panel plan shall indicate a panel symbol legend, all panel placements, critical dimensions of aisles widths and critical dimensions in relation to the building's structure and the building's n electrical/mechanical system devices and the panels. Each panel shall be noted as follows:

N (non-power) Width (in feet) Height (in inches)
or
P (power)

Example: a non-powered panel 2 feet wide and 68 inches high will be noted on the plan N 2 68

7.4 ELECTRICAL, VOICE AND DATA PLAN

The Electrical, voice and data plans shall indicate all panel placements, a symbol legend, and all receptacles used in each workstation. This plan shall also indicate the height and location of the building's light switches and building's mechanical control devices like thermostats. Provide a general note that on the "PREWIRED WORKSTATION plans" are to be coordinated with the Communication and Mechanical Engineering Plans.

7.5 ELEVATIONS AND INVENTORY PLAN

The Elevation and inventory drawings shall illustrate each typical workstation in elevation form with a related inventory list of all panels and components used to build the typical. The inventory fist shall be generic in description.

7.6 FINISHES

It is suggested when selecting finishes for prewired workstations that only two (2) fabric colors be used: one color for all panels and one color for tack boards. A third color can be used as a means of "way finding" for large open office projects.

7.7 COST

The average cost of a prewired workstation is $4000.00. Do not exceed this average cost figure or the project will be rejected. Verify line item 10 in the 1391 for a line item total cost of the prewired workstations appropriated for the project.

7 . 8 WORKSTATION LOCATION CODE

Each and every workstation will be identified on each plan with a single alpha identification code to indicate the "Typical". For example all like reception stations are "A" and like offices are "B". Every workstation shall have a "room number" that is separate and apart from the fixed room numbering system. This is to provide consistent workstation identification throughout all drawings. An example would be “A-100” “B-101” “B-102” “B-103”

7.9 PREWIRED WORKSTATION PACKAGE ITEMS

1. Panels
1.1 Acoustical/non-acoustical
1.2 Powered/non-powered
1.3 Connecting hardware

2. Components
2.1 Work surfaces
2.2 Drawers
2.3 Shelves(with doors/ without doors)
2.4 Files (lateral, panel hung/ bins)
2.5 Task Lights/special purpose
2.6 Counter tops
2.7 Drafting surface

3. Accessories
3.1 Tack boards
3.2 Locks
3.3 Shelf dividers
3.4 Reader Stand
3.5 Paper flow devices
3.6 Marker boards
3.7 Computer turntable
3.8 Printer stand
3.9 Coat rack
3.10 Wire guides
4. Signage
4.1 Organization signs
4.2 Workstation name signs

8. MANUFACTURER'S SUMMARY LIST

Provide a summary of all the manufactures' used in the CID package.
Manufactures name, address, phone, fax and Point of Contact is to be included.

9. FURNISHINGS LOCATION CODE

This CODE is assigned by the interior designer to each conventional furnishing item indicated in the CID. Use of this code is important for quick reference between Order Forms, Furniture Illustrations, and Placement Plans.
The first letter of the code is a GENERAL CATEGORY

EXAMPLE:
A - Accessories
B - Book storage
C – Chairs

The second number of the code is a SPECIFIC CATEGORY

1 - Plant (7' height in brass container)
2 - Clocks, Peter Pepper, #0000 Color Blue
3 - Wastebaskets, FSS, Color Black
4 - Chalkboard: Egan Visual, Oak

OVERALL EXAMPLE: C1, C2 and C3

C - CHAIRS
1 - Guest chair, Knoll, #1234, Color: #12 Red
2 - Ergo Chair, Knoll Bulldog, 1233, Color: #34- Blue
3 - Stacking Chair, Fixtures, Bola, 1234, Color #12 Multi

10. FURNITURE ILLUSTRATION SHEET

A Furniture Illustration Sheet is a pictorial example with finish samples of a single product specified for the CID. Only one product is illustrated per page.

The Furniture Illustration Sheet shall have the following information:

1. A Picture or line drawings of the product specified.

2. A Location Code to Key the specified product to the Footprint

3. A Sample of the product's finishes.

4. Recap quantity of illustrated item listed by room number (e.g. 4 ea. Room 104 Commander
3 ea. Room 103 Receptionist)

5. Job name, Job Location, Date.

11. FURNITURE PLACEMENT PLAN

A Furniture Placement Plan consist of one room broken out from the Composite Furniture Plan which identifies each furniture component shall be illustrated in the Furniture Placement Plan section. The Furniture Placement Plans shall be drawn at a 1/4" scale. Large rooms/areas shall be drawn at 1/8" scale.

Each Furniture Placement Plan shall contain the following:

1. 1/4" Scale-Drawing showing room and furniture.
2. Location Code and quantity of each item specified per room.
3. Name and Number of Room
4. Job Name, Job Location, Date.

The Composite Furniture Plan shall be a full size contract drawing with location codes. Half sizes will not be acceptable for review.

12. ARTWORK ILLUSTRATIONS SHEETS AND PLANS

The Artwork Illustrations Sheets shall have a pictorial example of the artwork with mat colors. Color photos copies are accepted.

Full size drawings of the Artwork Plan are to show plan placement of artwork and an elevation for all the artwork showing placement height and installation instructions.

Each Artwork sheet shall have the following:

1. A Picture of the proposed artwork.
2. Location Code
4. Room Name and Number that artwork will be displayed in.
5. Job name, Job Number, Date.
6. Mounting height and installation instructions.

13. ITEMIZED FURNITURE COST ESTIMATE

The itemized furniture cost estimate sheets list all furnishings; indicate quantities, unit costs and grand totals. The Cost Estimate is organized according to UNICOR and GSA Source/Schedules. The Cost estimate will also include a general 10% contingency and 7% installation. Because some items will include freight in the price. Note that freight charges are not included.

14. FURNITURE ORDER FORM

The Furniture Order Forms indicate all information necessary to order products specified in the CID. Only one product shall be listed per page.

Organize and separate the Order Forms according to the Sources and GSA Schedules to coordinate with the Itemized Furniture Cost Estimate. Do not organize forms according to the locations codes.

15. LETTER FOR WAIVER/JUSTIFICATION

FOR CID ITEMS THAT REQUIRE A JUSTIFICATION, SUCH AS OPEN MARKET ITEMS FOLLOW THE FORMAT EXAMPLE AND ATTACH IT TO THE APPROPRIATE ORDER FORM. See Appendix "C" for UNICOR Waiver information.

JUSTIFICATION FOR ACOUSTICAL PANELS
December 15, 1994

1. REQUESTING ACTIVITY:	U.S. Army Corps of Engineers EN-DA/Peggy Roberson 100 W. Oglethorpe Avenue Savannah, GA 31402-0889

2. POINT OF CONTACT: Peggy Roberson
(912) 652-5144

3. REQUIREMENTS: To provide acoustical and visual control through a cost effective and timely means. The panels will separate and define workstations for 7 individuals representing 5 engineering disciplines. These individuals are located in 1,470 sq. ft. of open area.

4. PROPOSED SOLUTION: To purchase portable, acoustical panels 62 inches high and various widths from XYZ manufacture. This manufacturer delivers and installs within 30 days from the date they received the order. See the attached order form for stock number, dimensions, colors and manufacturers.

5. UNICOR WAIVER: Market research indicates that the Federal Prison Industry does not supply this type of portable panel.

6. TRIANGLE/INTANGIBLE BENEFITS: The tangible benefits to be gained from this purchase will be an enhancement of employee morale and productivity due to the reduction of sound and visual disturbances currently found in this open space.

7. IMPACT IS REQUEST IS NOT APPROVED: Employee morale will drop, which could impact performance.

8. ESTIMATED DATE ITEMS ARE REQUIRED: ASAP but no later than 30 days.

16. HEALTH AND SAFETY CRITERIA

16.1 PROVIDE PROTECTION AGAINST PERSONAL INJURY AND DEATH FROM:

16.1.1 FALLS

* ASTM D-2047-Test for Slip Resistance of Hard Surfaces

16.1.2 CHEMICAL EMISSIONS
16.1.3 ELECTRONIC EMISSIONS
16.1.4 MICROBIAL CONDITIONS

NOTE: 16.1.2, 16.1.3, and 16.1.4 are not defined by code at the present. OSHA has a proposed regulation in relation to indoor air quality standards. It is currently in the review phase. It is not in

16.1.5 FIRE (Interior Finishes and Furnishings)
* ASTM-E-84-Steiner Tunnel Test.

* NFAP-701-Standard method of Fire Test for Flame Resistant Textiles and Films.

* NFPA-705-Field flame Test for Textiles and Films

* FF 1-70-Standard for the Surface Flammability of Carpet and Rugs (Methenamine Pill Test)

* NFPA 80-Fire Test of Door and Windows\

* NFPA 253-Flooring Radiant Panel Test

* NFPA 258-Research Test method for Determining Smoke Generation of Solid Materials.

*NFPA 259-Potential Heat of Building Materials

*NFPA 260 Methods of Tests and Classification System for Cigarette Ignition Resistance of Components

* NFPA 261- Method of Test for Determining Resistance of Mock-up Upholstered Furniture Material Assemblies to Ignition by Smoldering Cigarettes.

* NFPA 264- A Standard Test Method of Test for Heat Release Rates for Upholstered Furniture Components or Composites and Mattresses Using an Oxygen Consumption Calometer.

* NFPA 267- Standard on Mattress, subjected to Open Flame Ignition, Using a Large-Scale Oxygen Consumption Calorimeter.

* UL-1056- Fire Test of Upholstered Furniture

* TB 133- Flammability Test Procedure For Seating Furniture for Use in Public Occupancies. State of California Bureau Home Furnishings.

* TB 117- (Section A though E) Test Procedures for Testing the Flame Retardance of Resilient Filling Materials used in Upholstered Furniture.

16.2 PROVIDE FURNISHINGS AND EQUIPMENT WITH ANTHROPOMORPHIC FIT AND STABILITY
* ANSI/BIFMA X5.6-86 Standard for office Furnishings.

16.3 PROVIDE GLARE-FREE ILLUMINATION OF WORK SURFACES
* ANSI E-97

16.4 PROVIDE ACCEPTABLE REFLECTANCE LEVELS
* ASTM E-97-IES

16.5 PROVIDE FOR USE AND MAKE ACCESSIBLE TO PHYSICALLY DISABLED
* American Disabilities Act: ASTM 117.1
* Uniform Federal Accessibility Standards

16.6 PROVIDE SAFE AND SWIFT EGRESS FROM INTERIOR SPACES
* International Building Code, BOCA

* NFPA 101 Fire Safety Code-94
* National Building Code, BOCA
* Standard Building Code
* Uniform Building Code, ICBO

16.7 PROVIDE ACOUSTIC CONTROL
* Airborne sound: ASTM C 423, PBS C.I
* Speech Privacy: SPP, Speech Privacy Potential
* Impact sound transmission: ASTM C 423-66, PBS C-2

17 CHECKLIST FOR SID REVIEWS

17.1 GENERAL
The Checklists are used to ensure that SID/CID binders and all contact drawings and specifications are complete and will meet customer approval.

17.2 CHECKLISTS FOR SID BINDERS

The correct organization of the SID Binder is important to ensure a rapid and accurate evaluation of the submittal and to ensure all the information provided in the binders appears in the contract documents The SID binder shall include the information in the order indicated in
Paragraphs 4 and paragraph 5 Submittal Matrix Summary 1-17.

17.2.1 CHECKLIST FOR SID NARRATIVE

Review the statement of DESIGN OBJECTIVES. Design Objectives are to indicate the proposed building materials, color scheme and the philosophy for the selection each. When applicable the design narrative shall discuss Energy Efficiency, Safety, Maintenance, Durability, Image and Occupant Morale.

17.2 CHECKLIST FOR EXTERIOR COLOR LEGEND AND COLOR BOARDS
Exterior Colors are often dictated by the Installation's Design Guidance. In these instances, the Federal Standard 59533 paint colors may be referenced for factory-finished items. See examples below.

Metal Roof Federal Standard 595b 0000

17.2.2 REVIEW QUESTIONS

1. Are all exterior materials labeled and properly identified?

2. Do all exterior materials and finishes meet standard Installation Design Guidance requirements?

3. Are there any miscellaneous exterior materials and finishes that need to be listed and sampled in the SID Binder OR indicated in Guide Specifications or and indicated on Finish Schedule? Contract drawings?

4. Are all the exterior materials sampled in SID Binder?

5. Are all exterior materials indicated on Finish Schedule sampled in SID Binder?

17.3 CHECKLIST FOR SID INTERIOR COLOR SCHEME AND COLOR BOARDS:
Review the architectural finish samples for an orderly arrangement on 8 1/2" x 11" color boards according to like rooms/areas receiving like finishes.

Each color board will be noted as a COLOR SCHEME. Each Color Board shall consist of a material sample board and a material legend board.

17.3.1 Each Color Scheme shall be properly identified:
[The following information should be on the lower portion of each sheet]

a. Project title
b. Location
c. Date

d. A/E Firm

17.3.2 Each material legend shall have written identification of materials in the order as follows:

1. Alpha Code
2. Material
3. Manufacturer
4. Color name
5. Color Number

The material legend identification shall be consistent with the material legend found in the Exterior and Interior Finish Guide Specification or in the contract drawings. Without exception all rooms and areas shall be identified and their finishes shown.

* The general contractor will not be receiving the SID binders therefore all finishes and their placement must be on the contract drawings or in the Guide Specifications.

17.4 CHECKLIST FOR INTERIOR COLOR SCHEME

17.4.1 SID REVIEW QUESTIONS

COLOR SCHEME

1. What basic color scheme is used?
    a. Monochromatic
    b. Analogous plus complement accent
    c. Complementary
    d. Split Complementary
    e. Triadic

2. Is there a basic neutral color for all walls?

3. Does the color scheme create a sense of order?

4. Are accent colors appropriate in hue value and intensity to create interest? Do they overpower the space?

5. Are Accent Colors clearly indicated on the contract drawings?

6. Are the colors placed to create a "visual balance" throughout the building?

7. Do the Accent colors assist with "pathway finding"?

GENERAL FINISHES

1. Do finishes offer variety in appearance? (soft, hard, smooth, rough, dull, gloss, matte)

2. Do selected finishes enhance the architectural lines of the rough, dull, gloss, matte) building?

3. Are materials, finishes, and colors appropriate for the surfaces they will be covering?

4. Are walls painted [Gloss] [Semi-Gloss] [eggshell]?
(Flat Latex wall paint is not durable for interior walls.)

5. Do the interior finishes reflect and reinforce the appropriate image for the facility?

6. Is the flooring selected for all areas appropriate in color pattern, texture and scale?

7. Does color and pattern in Carpet/Carpet Tile relate to scale and size of room?

8. Will Carpet/ Carpet Tile color and pattern hide soil and wear path?

9. Are window treatments compatible with architectural detailing?

10. Will window treatment and its installation cause unnecessary wear or abrasion?

11. Are finishes selected creative in use and placement?

12 Will there be acoustical problems because of the materials selected? (A balance of Reflective and Absorptive surfaces is necessary)

13. Will all colors, materials, and finishes retain their appearance long-term?

14. Are all interior finishes labeled and properly identified?

15. Do all interior finishes meet standard codes requirements?

16. Are there any miscellaneous interior finishes and materials that need to be listed, sampled and specified?

17. Are all interior materials sampled in SID Binder listed on the Finish Schedule?

18. Are all materials listed on the Finish Schedule sampled in the SID Binder?

19. Are there any treatments such as bordered carpets, or multi-color ceramic tile borders that need to be illustrated in plans but are not?

20. Are all SID finishes specified according to the quality to ensure quality and performance?

PREWIRED WORKSTATIONS

1. Do the prewired workstations and specifications coordinate to fully cover all the information required for bidding, and installation of the product?

2. Have all the required contract drawings as indicated in paragraph of the Submittal Summary Matrix been provided?

17.4.2 CHECKLIST FOR SAFETY:

Do all finishes selected shall meet code requirements and are appropriate in color, texture, and pattern to insure the well being of the inhabitants?

17.4.3 FACILITY SIGNAGE REVIEW QUESTIONS

1. Is the signage listed on a separate plan and indicated correctly in the specifications?

2. What typeface is specified? Does it meet approved standards?

3. Is Symbol Signage used in lieu of Printed identification for restrooms?

4. Are Signs flexible so that names and rooms can be changed easily?

5. Are Signage colors and samples in the SID?

For additional reference on signage refer to Sign Standards relative to the Department of Defense.

18.5 CHECKLIST FOR CID BINDER LAYOUT

The CID Binder is the most detailed of all binders submitted because of the numerous components specified, priced, and illustrated. The correct organization of

the CID Binder is important to insure a rapid and accurate review of the building's furniture components and their relationship to the architecture and its finishes. The CID Binder shall include the information in the order indicated in paragraph 5 Submittal Matrix Summary items 18-31.

18.5.1 CHECKLIST FOR CID NARRATIVE: Review the statement of DESIGN OBJECTIVES explaining the CID interior design philosophy of the facility. Design Objectives and the proposed method of accomplishing the objectives shall cover, when applicable, the furnishings and their relationship to the building and it's inhabitants, energy, efficiency, safety, health, maintenance, image, personal performance of occupants and functional flexibility.

18.5.2 CID REVIEW QUESTIONS

1. Does the layout of the CID Binder follow the TABLE OF CONTENTS format indicated in paragraph 4.7 and 5?

2. Are all pages properly identified?

3. Are all samples labeled and identified?

4. Are there any miscellaneous components shown on the Footprint Plan that are not shown in the CID Binder?

5. Are there any miscellaneous components shown in the CID Binder that are not reflected on the FURNITURE PLACEMENT PLANS?

CHAIRS

1. Is the chair appropriate for the task?

2. Is the style of the chair in keeping with the overall theme of the building and other components selected?

3. Is the chair scaled correctly for the space it occupies?

4. Are chair costs appropriate for the project?(ERGO $300-350)

5. Is the finish of the chair interesting and in harmony with the elements surrounding it?

6. Are all chairs listed on the composite Footprint Plan, Furniture Placement Plans, Illustration Sheets, Location Code and Order Forms?

DESK

1. Is the desk appropriate for the task?

2. Is the style of the desk in keeping with the overall theme of the building and other components selected?

3. Is the desk too large for the space it occupies?

4. Are the desk costs appropriate for the project?

5. Is the finish of the desk interesting and in harmony with the elements surrounding it?

6. Are all desks listed on the composite Footprint Plan, Furniture Placement Plan, Location Code and Cost Estimate, Furniture Illustration Sheet, and Order Form?

COST ESTIMATES and ORDER FORMS

1. Are cost estimates correct?

2. Are Order Forms completed and accurate?

18.5.3 CHECKLIST FOR SAFETY

1. In the placement of furniture, is emergency egress considered?

2. In the placement of furniture, is consideration given to the requirements for the handicapped. (Reference: Uniform Federal Accessibility Standards and ADA).

19. LESSONS LEARNED

Lessons Learned are for information only and to eliminate lost effort in the development of SID/CID submittals. Lessons learned are from both Air Force and Army projects.

Experience has taught that generally neutral interior environments with color accents used appropriately in SID finishes and all CID finishes provide the best

"look" for a government facility. The common sense approach to all projects is the most cost effective way to achieve customer satisfaction.

Interior Design Solutions are important to the treatment and housing of all personnel. If leaders expect excellence in people, the environment in which they are housed should not be created on a whim or by individuals not technically educated and experienced in creating such environments.

Although interior environments cannot motivate people to excel they can provide a background that creates a functional opportunity for them to excel.

The Savannah District considers a quality interior design environment to be one that meets the followings ten (10) objectives:

1. Complete Coordination between contract drawings and specifications. The lack thereof is a potential source of liability.

2. The use of durable, easily maintained finishes that support "good housekeeping".

3. Appropriate use of accents colors that are easy to "live with" and cost effectively removed when updating the "look".

4. Spaces that are planned to support life safety.

5. Spaces that meet the functional needs of the user. Maximize flexibility for future change in both SID and CID plans.

6. Furnishing selected that support personal performance and personal health.

7. Appropriate use of alll the design elements (Landscape, Architecture and Interior Design) to support "path-way finding" "up to" and within the facility.

8. Accurate documentation of all the contract documents (SID) and procurement documents (CID).

9. Finishes and furniture selected that meet government procurement regulations.

10. Customer satisfaction.

19.1 EXTERIOR FINISHES

1. Exterior SID: The Exterior building finish materials, colors and signage shall be in accordance with the Master Plan/Installation Design Guide of the installation on which the project is being constructed.

2. Verify with each installation what their current standard exterior finishes are.

3. Use the Federal Standard Number 595B to indicate the range of exterior finish colors.

19.2 INTERIOR DESIGN PHILOSOPHY

1. Interiors building finishes, furnishings and colors schemes are to be appropriate and support the function of the facility.

2. Interior design objectives are to create an environment that enhances public image, employee morale, provide building finishes that are durable, easy to clean, cost effective to maintain and support life safety.

3. Appropriate accent colors are easy to "live with" and can be easy and cost effectively removed when updating the "look" is the objective.

4. Accurate documentation of finishes and furnishings in both the SID and the CID.

5. Talk to the customer. Let them know what you are planning before you submit the color boards. Do more in-process design and review communication with the customer before formal submittals.

6. Generally the exterior color scheme should transition and continue into the interior color scheme.

19.3 INTERIOR FINISHES

1. Non-slip surfaces at entryway

2. Semi-gloss for trim only

3. Egg-shell finish for walls if possible.

19.4 INTERIOR COLORS

1. A neutral warm or cool color palette with accent colors used in furnishings has generally been the most successful for most interior projects.

2. Colors in a mid-tone range used for door trim and matching base is generally approved.

3. Light colored carpets shows soil easily and will be disapproved.

3. Painted doors, trim and walls to blend (do not use extreme contrast colors for doors and walls).

5. Because the general contractor can substitute colors, textures and patterns during the construction process "permanent interior building finishes" are most successful if they are neutral colors.

The most typical finishes substituted during construction are: Plastic laminates, vinyl wall coverings, ceramic tile, toilet partitions, wood stains.

19.5 ACCENT COLORS

1. Ceramic tile accent borders on floors and walls in restrooms (one or two colors on a neutral field.)

2. Multi-colored graphic pattern carpet with solid or fleck colors used as accent borders.

3. Accent vinyl wall covering colors used a visual "pathway finding" guide through a facility.

4. Colorful fabrics with small pattern designs used on guest chairs.

19.6 WALL COVERING

1. Use Type II for all areas. Type III only in heavy use corridors. The additional satin resistant coatings used for health care environments.

2. The architect is to design walls with a correct vapor barrier. Wall covering can be used on both exterior and interior perimeter walls.

3. Must meet NFPA Class A Flame Spread rating.

4. Use chair rail when walls are subject to frequent furniture movement and scarring. ig. Conference rooms and waiting areas.

5. Fabric wall covering can only be used in a sprinkled building according to NFPA.

19.7 CARPET

1. Primary interior finish and should be the bases for the overall color scheme.

2. Graphic Patterns with random pattern is the best. Avoid large geometric or rigid patterns. They look askew if adjacent to a wall that is not plumb,

3. Avoid bright or light colors which soil easily.

4. Carpet tile is recommended when power and communications are installed in floor raceways.

5. Carpet tile is best for corridors: use patterned fields and solid-colored borders for "pathway finding".

19.8 SIGNAGE

1. Use the Installations' Design Guidance or the appropriate design guide for the Department of Defense agency.

2. Coordinate the signage color with the interiors color scheme.

3. Specify a flexible sign that allows for easy personnel name change or room name change.

4. Signage changes. It is helpful when ordering additional signage that signage specified be on a GSA schedule.

5. Bulletin Boards and fire exit plans are to be included in facility signage package.

19.9 UPHOLSTERY

1. Tweeds and small-scaled patterns retain their appearance longer.

2. Avoid solid colors because they show dirt, lint and fade faster that patterns and tweeds.

3. Vinyl's are used for wet areas such as labs.

4. Avoid vinyl fabrics in administrative areas or for general use seating.

5. Leather seating is used for only high-ranking officers and directors.

6. Use Nylon and Nylon blends seating fabrics that are easy to maintain.

19.10 FURNITURE

1. Black and wood veneer horizontal surfaces are discouraged in general public use areas. A plastic laminate table surface in public areas retains its appearance longer.

2. Mid-tone range colors for work surfaces are recommended because it will not add to eye fatigue. Light oaks, beige, and grays work best.

3. Black finishes are discouraged for case goods because it is a housekeeping problem.

4. Oak is an acceptable color range for woods and laminated wood surfaces and frames. Darker woods are traditionally accepted for those of higher rank.

5. Use commercial grade, performance tested GSA contracts.

6. Laminate tops are recommended for all work surfaces other that executive suite areas (wood veneer may be used).

7. Systems furniture plans require Air Force HQ Interior Design Review and approval.

8. Acoustical panels over 65" in height may restrict light and air distribution. 62-64" high panels are generally the best.

9. Fabric finishes on flipper doors will not be approved.

19.11 ARTWORK

1. Only use in public areas; not in private personnel offices.

2. Use to assist occupants in "pathway finding"

3. Hang artwork at 5'-6" with security type devices.

4. Choose mats and frames, which complement other accessories and interior color scheme.

5 . Art should be large enough to fill the space.

19.12 PLANTS AND ACCESSORIES

1. Plants help soften the space.

2. Do not specify live plants. This type of specification requires a maintenance contract.

3. Use quality artificial plants such as with real trucks, bark etc.

4. Specify sturdy containers. Limit the use of wicker baskets.

19.13 Window Treatments

1. Use doubled return hems and doubled bottom hems.

2. Draperies are not encouraged in areas other that executive suites and living areas.

3. Mini blinds that match the window frame are recommended for admin space.

4. Vertical blinds are accepted and can have a fabric inserts. Do not specify any fabric vertical blinds without using a PVC insert vain.

5. Specify blackout lining in sleeping areas

6. Fabric valances may be used over mini blinds

7. Use decorative rods or top treatments to give draperies a finished appearance.

8. Draperies are to be 2.5 fullness.

9. Ripple fold over pinched pleats recommended.

10. Draperies are to have minimum 4-inch returns and 2 inch overlaps with a 4-inch heading. Weighted at the corners and all seams.

19.14 BEDSPREADS

1. Use a fitted style bedspread.

2. Pattern is recommended.

3. Minimum 5 oz 100% polyester fill

4. Fabric must have dimensional stability with less than 2% shrinkage after washing at 160 F degrees.

19.15 THE DISTINGUISHING CHARACTERISTICS OF SUCCESSFUL INTERIORS

The Savannah District holds firmly to the position that a successful interior design solution consistently incorporates typical finishes, colors and features to obtain quality interior design solutions. The following guidelines shall be the basis from which all projects will be reviewed and judged for their success.

When planning for the interior environment emphases of one from each of the following groups will hopefully achieve good design:

1. Architectural Emphasis or Component Emphasis

2. Color System in Contrast or Color System in Continuity

3. Directional Reinforcement OF Directional Change

4. Value Contrast or Value similarity

5. Surface/Texture Emphases or Surface Pattern Emphasis

6. Contemporary/Traditional Emphases or Eclectic Emphasis

Interior SID: Permanent interior building finishes are to be neutral in color. "Permanent finishes" are considered:

1. Plastic Laminates

2. Vinyl Composition Tile

3. Ceramic Tile or other hard tiles

4. Wood doors (stained wood finish)

5. Metal Doors and Metal Trim

6. Toilet Partitions

7. The majority of walls and ceilings.

The appropriate placement of accent hues and patterns for a Government project are considered to be:

1. Accent borders on floors and walls in restrooms.

2. Multi-colored graphic patterned carpet used throughout the facility.

3. Accent colors on vertical surfaces used as visual assistant in “path wayfinding”

4. Artwork

5. Upholstery fabric

Although cost constraints can limit complex design details throughout the facility, there are areas where cost effective use of accents hues and identifying architectural features should be considered and used to create an image. The following areas are ranked according to importance:

1. Lobby Areas
2. Main Conference rooms
3. Command Areas
4. Employee Break rooms and Toilet Rooms
5. General Office Areas

Successful "Path wayfinding" is achieved when users and visitors easily find their way “up to" a building and throughout its interiors. The District's position is that "path wayfinding" can successfully be obtained by incorporating reason and experience offered by a multi-disciplined team of the Landscape Architect, the Architect and the Interior Designer.

20. SID/CID ILLUSTRATIONS

30% STRUCTURAL INTERIOR DESIGN

FY – 2003
UEPH DORMS

ENGLIN AIR FORCE BASE
FLORIDA

U.S. ARMY CORP OF ENGINEERS
MOBILE DISTRICT
MOBILE, ALABAMA
APRIL 1994

Building Exterior Elevation

1. SMOOTH FACE BLOCK LIGHT TAN
2. GLACING, PPG, SOLARBRONZE TINT
3. META, RCSF, FEDERAL STANDARD 595B 000000
4. METAL GURRER, FEDERAL STANDARD 595B 000000

EXTERIOR MATERIAL SAMPLES

SAMPLE 1

SAMPLE 2

SAMPLE 3

SAMPLE 4

FLOOR PLAN OF BUILDING

COLOR SCHEME "**A**"- GENERAL OFFICE AREAS
COLOR SCHEME "B" TOILET ROOMS
COLOR SCHEME "C" MISCELLANEOUS AREAS

FIRM PROJECT NAME

INTERIOR COLOR PLACEMENT

DATE LOCATION

INTERIOR
COLOR BOARDS

FIRM

PROJECT NAME

INTERIOR COLOR BOARD

DATE

LOCATION

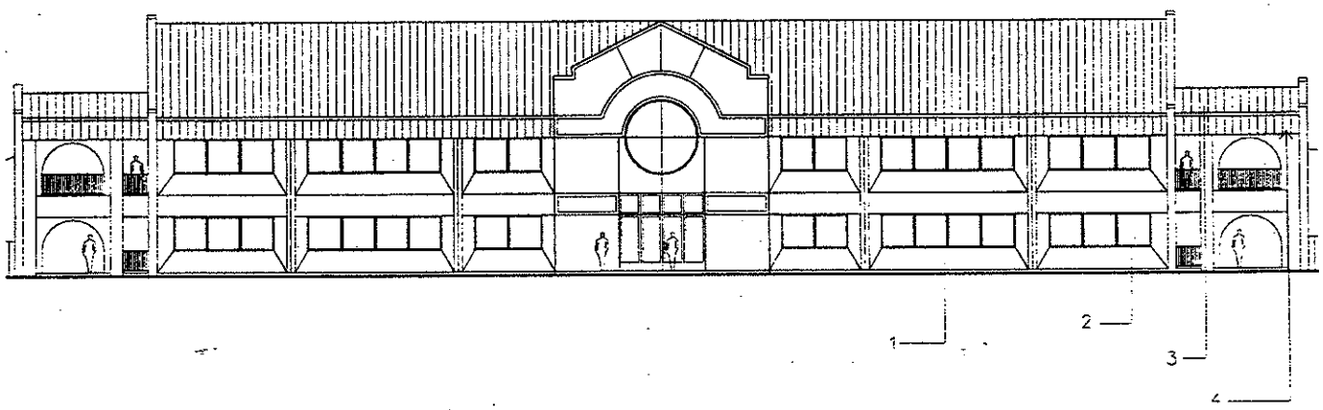

1. SMOOTH FACE BLOCK, LT. TAN
2. GLAZING, PPG, SOLARBRONZE TINT
3. METAL ROOF, FEDERAL STANDARD 595B 00000C
4. METAL GUTTER, FEDERAL STANDARD 595B 00000

FRM
DATE

EXTERIOR ELEVATIONS

PROJECT NAME
LOCATION

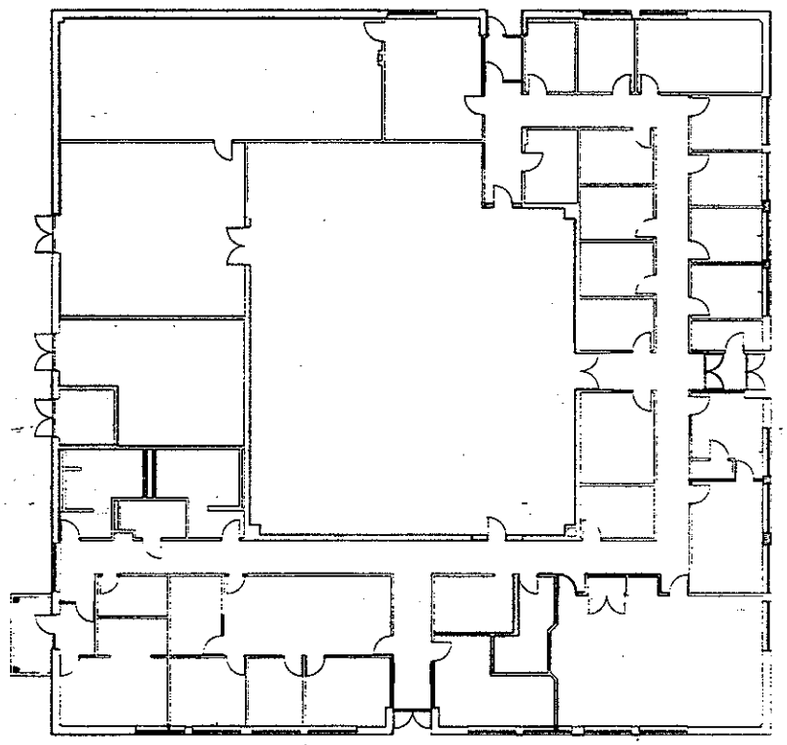

COLOR SCHEME "A"- GENERAL OFFICE AREAS

COLOR SCHEME "B" TOILET ROOMS

COLOR SCHEME "C" MISCELLANEOUS AREAS

FIRM

DATE

INTERIOR COLOR PLACEMENT

PROJECT NAME

LOCATION

INTERIOR
COLOR BOARDS

FRM

DATE

PROJECT NAME

LOCATION

SAMPLE

FIELD

CT-1

ACCENT

CT-2

SAMPLE

GROUT-1

SAMPLE

CT-3

FLOOR TILE

SAMPLE

P-2

CEILING

SAMPLE

TP-1

PL-1

FIRM

DATE

COLOR SCHEME "C"

PROJECT NAME

LOCATION

CT-1: CERAMIC TILE, AMERICAN OLEAN, 153 ALMOND. 4" X 4"

CT-2: CERAMIC TILE, AMERICAN OLEN, 2" X 2" TEAL

CT-3: CERAMIC TILE, AMERICAN OLEN, 2" X 2" A 20 BEACH TAN

GROUT-1: AMERICAN OLEAN, BROWN

P-2: EPOXY PAINT, WHITE (FOR CEILINGS)

PL-1: PLASTIC LAMINATE, WILSONART, ALMOND, 513 COUNTER TOPS

TP-1: PLASTIC LAMINATE, WILSONART, ALMOND 513 TOILET PARTITIONS

FIRM

DATE

COLOR SCHEME "C"

PROJECT NAME

LOCATION

SAMPLE

APCO WHITE (PLAQUE HOLDER)

SAMPLE

LETTERING

APCO BLACK

SAMPLE

APCO CLEAR (INSERT)

FIRM

DATE

SIGNAGE

PROJECT NAME

LOCATION

XYZ SYSTEMS MFG.

SAMPLE

PANELS FABRIC
466 TAN

SAMPLE

TACKBOARD
033 TEAL

SAMPLE

FLIPPER DOOR AND TRIM
PUTTY

COMPONENTS

WORKSURFACES

FIRM
DATE

PREWIRED WORKSTATION COLOR BOARD

PROJECT NAME
LOCATION

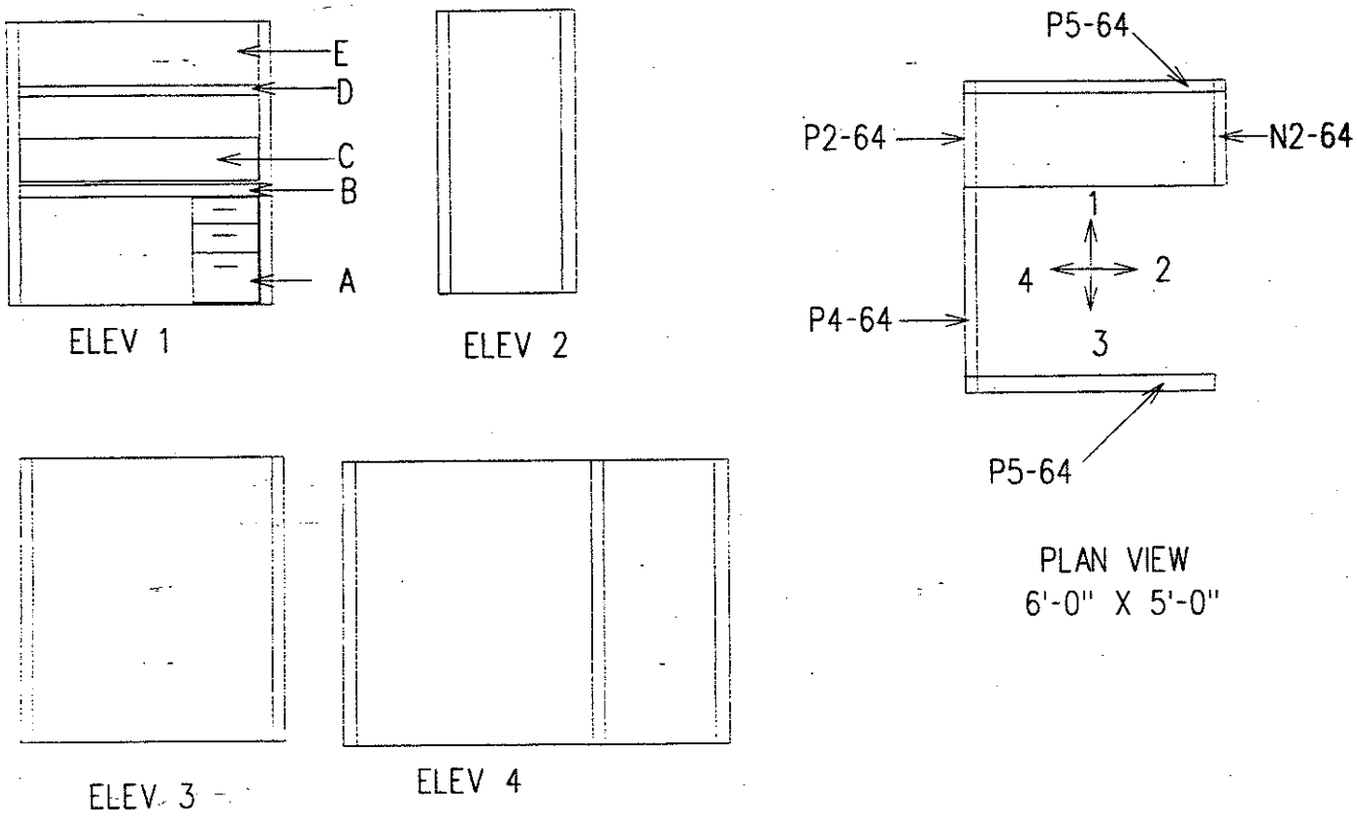

QTY.	CODE	DESCRIPTION
2	P5-64	2' W X 64"H POWERED ACOUSTICAL PANEL
1	N2-64	2'W X 64"H NON-POWERED ACOUSTICAL PANEL
1	A	3", 3", 12" DRAWER PEDESTAL
1	B	23"D X 60" W HANGING WORK SURFACE

10 EACH TYPICAL" A"

FIRM

DATE

PREWIRED WORKSTATION

TYPICAL "A"

LOCATION

INSERT CONTRACT DRAWINGS OF:

FLOOR PLANS

FINISH SCHEDULE

SIGNAGE PLAN

PREWIRED WORKSTATIONS DRAWINGS

FIRM

DATE

PROJECT NAME

LOCATION

100%
COMPREHENSIVE INTERIOR DESIGN

FY-95
UEPH DORMS

EGLIN AIR FORCE BASE
FLORIDA

U.S. ARMY CORPS OF ENGINEERS
MOBILE DISTRICT
MOBILE, ALABAMA
APRIL 1994

MANUFACTURER ABC
109 MAIN STREET
ANYWHERE, USA 00000
POINT OF CONTACT:
1-800-000-0000

MANUFACTURER XYZ
109 MAIN STREET
ANYWHERE, USA 00000
POINT OF CONTACT:
1-800-000-0000

MANUFACTURER XXX
109 MAIN STREET
ANYWHERE, USA 00000
POINT OF CONTACT:
1-800-000-0000

INSERT COMPOSITE FURNITURE PLANS

FIRM

DATE

PROJECT NAME

LOCATION

A- ACCESSORIES

B- BOOKCASES

C- CHAIRS

D- DESKS

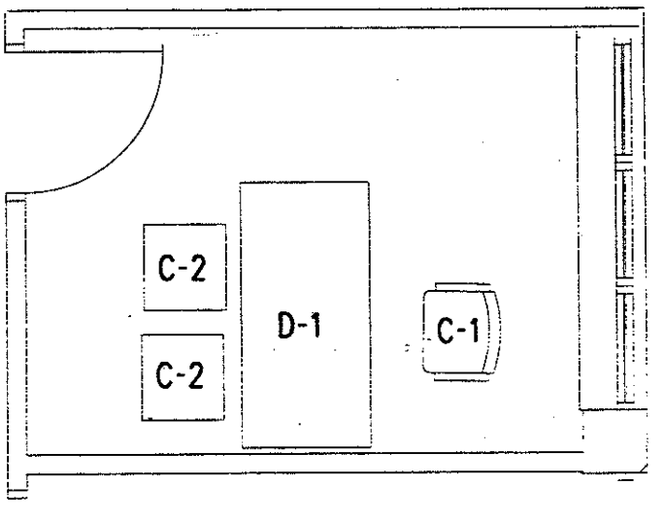

ROOM:123

QTY.	LOCATION CODE	DESCRIPTION
1 EA.	C-1	KNOLL BULL DOG , BLACK FRAME, COLOR: TEAL
2 EA.	C-2	KRUGER, "VERSA" BLACK FRAME, TEAL
1 EA.	D-1:	XYZ , WOOD: WALNUT

FIRM

DATE

FURNITURE PLACEMENT PLAN

PROJECT NAME

LOCATION

FURNITURE ILLUSTRATION

C-2

SINGLE LINE DRAWING
OR
CUT SHEET

FABRIC:
002 BLUE

SAMPLE

FRAME
BLACK

SAMPLE

ROOM	QTY	TOTALS
123	2	8
124	2	
125	2	
126	2	

FIRM
DATE

FURNITURE ILLUSTRATION SHEET

PROJECT NAME
LOCATION

ARTWORK ILLUSTRATION

A-1

A-1

MAT
002 BLUE

SAMPLE

FRAME
BLACK

SAMPLE

MOUNTING INSTRUCTIONS:

PLACE CENTER OF WALL WITH TOP OF FRAME 64"
ABOVE THE FINISHED FLOOR

ROOM	QTY	TOTALS
123	1	1

FIRM
DATE

ART ILLUSTRATION SHEET

PROJECT NAME
LOCATION

FIRM
DATE

COST ESTIMATE

PROJECT NAME
LOCATION

SOURCE: FSC GROUP 71, PART X CONFERENCE TABLES

CODE	MFG.	ITEM	QT.	UNIT PRICE	TOTAL
T-1	KRUGER	TABLE	04	$ 350.00	1,400.00
T-2	KRUGER	TABLE	01	$ 350.00	350.00
T-3	KRUGER	TABLE	04	$ 350.00	1,400.00
				TOTAL:	$5,4350.00
T-5	VECTA	TABLE	04	$1,000.00	$4,000.00
T-6	VECTA	TABLE	04	$1,000.00	$4,000.00
				TOTAL:	$8,000.00

TOTAL OF ALL CID SOURCES:
10% CONTINGENCY:
7% INSTALLATION:
MISCELLANEOUS FEES:

GRAND TOTAL:

FURNITURE ORDER FORM SAMPLE
PROJECT TITLE

1. LOCATION CODE:
2 DIRECTORATE:
4. DEPARTMENT
5. ACTIVITY:
6. FSC GROUP: 71 PART III SECTION: L CLASS 7110 SIN 499-1 CONTRACT EXPIRATION DATE: MOL:
7. SOURCE: Manufacturer's name etc....
8. PRODUCT NAME:
9. PRODUCT STOCK NUMBER:
10. PRODUCT FABRIC NAME AND COLOR NUMBER:
11. PRODUCT FINISH NAME AND COLOR NUMBER:
12. DIMENSIONS: WEIGHT:
13. DESCRIPTION:(Include construction information; fabric content, finish application)
14. JUSTIFICATION: These guest chairs are coordinated to match the tasks seating at each workstation. The size of the guest chair was critical because of the limited space where they were to be placed. If this company is not selected coordinate the newly proposed finishes with Location Codes: C3, C4 and C5.
15. ROOM LOCATION QUANTITY PER ROOM
16. TOTAL QUANTITY:
17. UNIT PRICE:
18. TOTAL PRICE:
19. FREIGHT CHARGES: FOB DESTINATION (Note if freight charges are included in the price of the CID item.)
20. Additional remarks or justification.

21. APPENDICES

A. ADA REQUIREMENTS

B. COMMANDER'S POLICY

C. UNICOR WAIVER

DEPARTMENT OF THE ARMY
U.S. Army Corps of Engineers
WASHINGTON, D.C. 20314-1000

REPLY TO
ATTENTION OF:

CEMP-EA/CECW-EP

25 JAN 1994

MEMORANDUM FOR SEE DISTRIBUTION

SUBJECT: Access for People with Disabilities

1. Reference Secretary of Defense memorandum dated 20 October 1993, subject as above (enclosure 1).

2. In accordance with the referenced memorandum, the Department of Defense (DoD) has implemented a new policy concerning accessibility standards. In the past, USACE was required to meet the requirements of the **Uniform Federal Accessibility Standards (UFAS)** and not the **Americans with Disabilities Act Accessibility Guidelines (ADAAG)**. The new policy requires that, in addition to meeting UFAS requirements as required by 42 U.S.C. 4151-4157 and consistent with 29 U.S.C. 794, the requirements of the ADAAG that provide equal or greater accessibility then the requirements of the UFAS must also be met in those facilities subject to UFAS. The facilities excluded under UFAS (such as unaccompanied personnel housing) are still excluded under this new policy, even though the ADAAG has no such exclusions. The implementation of this new policy is considered to have *routine application* as defined by ER 1110-345-100.

3. Copies of UFAS and ADAAG criteria are available from the Architectural and Transportation Barriers Compliance Board, telephone (202) 272-5434. Copies of the Title II Technical Assistance Manual which explains differences between the two standards are available from the Department of Justice, (202) 514-0301.

4. The Directorate of Military Programs POC is Mr. D. S. Gim, CEMP-EA, (202) 272-0440, and the Directorate of Civil Works POC is Mr. Douglas J. Kamien, CECW-EP, (202) 272-8894.

FOR THE DIRECTORS OF MILITARY PROGRAMS AND CIVIL WORKS:

Encl

RICHARD C. ARMSTRONG, P.E.
Chief, Engineering Division
Directorate of Military Programs

PAUL D. BARBER, P.E.
Chief, Engineering Division
Directorate of Civil Works

DEPARTMENT OF THE ARMY
U.S. Army Corps of Engineers
WASHINGTON, D.C. 20314-1000

REPLY TO
ATTENTION OF:

CEMP-EA

31 MAR 1993

COMMANDER'S POLICY MEMORANDUM #7

SUBJECT: Comprehensive Interior Designs

1. The Vice Chief of Staff, Army has placed priority on providing quality living conditions for our soldiers wherever stationed. While this initial thrust to improve the quality of interior environments is directed at barracks facilities, my overall concern is that we ensure quality interior living, working, and training conditions for all of our customers.

2. In order for the Army and our other customers to recruit and retain dedicated career professionals, excellent environments are needed to provide a high quality of life. Our customers and our own personnel spend a majority of their time in interior environments. Excellence in building interiors and furnishings is critical in meeting our customer's and our own functional and operations requirements. Excellent comprehensive interior design must be given high priority in the planning, programming, design, and implementation of our construction projects.

ARTHUR E. WILLIAMS
Lieutenant General, USA
Commanding

DEPARTMENT OF THE ARMY
U.S. Army Corps of Engineers
Washington, DC 20314-1000

CEMP-EA

Regulation
No. 1110-345-122

15 April 1994

Engineering and Design
INTERIOR DESIGN

1. **Purpose.** This regulation establishes policy, requirements, and responsibilities to be followed in the planning, design, approval, and procurement of interior designs for military construction projects and improvement programs.

2. **Applicability.** This regulation applies to HQUSACE/OCE elements, major subordinate commands (MSC), district commands and technical centers, laboratories, and field operating activities (FOA) having military construction (MILCON) responsibilities.

3. **References.** References and additional information resources are listed at Appendix A.

4. **Projects Requiring Interior Design.** Interior design is required on all new building construction and renovation projects regardless of funding source. Interior design guidance for most facility types is provided by Design Guide (DG) 1110-3-122. Interior design guidance for medical facilities is furnished by Architectural and Engineering Instructions, Medical Design Standards. Interior design for family housing will be in accordance with Architectural and Engineering Instructions, Army Family Housing.

5. **Interior Design Services.** Two types of interior design services are offered.

a. **Building-Related Interior Design.** Building-related interior design service will be provided for all facilities. This service requires the accommodation of needed furniture and equipment within the building, and the design or selection of items normally provided as part of the building construction project in accordance with AR 415-15. These services will be provided as an integral part of the project design and shall include:

(1) Basic space planning for anticipated furniture and equipment requirements in conjunction with the functional layout of the building design and such requirements as life safety, privacy, lighting, ventilation, and accessibility.

(2) Design, selection, and coordination of surface materials and colors that are applied to or compose walls, floors, ceilings, trims, doors, windows, window treatments, built-in furniture and installed building equipment, lighting, signage and other items which are permanently attached to, or are integral to the building. Appendix B further defines interior design elements that are building-related and furniture-related.

b. **Furniture-Related Interior Design.** Furniture-related interior design should be provided for all facilities where the arrangement of furniture and furnishings is important to building functionality. Furniture-related interior design services relate to the accommodation and selection of items that will be provided or procured by the Government. This service will be provided when requested by the using activity and will normally include:

(1) Selection, and color coordination of furniture and equipment drawn from existing inventory, procured from Government supply sources (see Appendix C), or procured by competitive bid. These items normally include such things as ergonomic chairs, freestanding and mobile furniture, draperies, lamps, rugs, plant materials, planters, and free standing or wall hung art.

(2) Detailed space design, placement planning, and procurement documentation for the selected furniture, furnishings, and equipment.

This regulation supersedes ER 1110-345-122, 31 October 1989.

(3) Coordination of furniture-related items with the building design.

6. General Requirements.

a. **Building-Related Interior Design.** General requirements for building-related interior design are as follows:

(1) Preparation of the basic space layout plans for furniture and equipment, in coordination with the functional layout of the building design.

(2) Specification of the material and color applications for interior component surfaces, and preparation of color and finish schedules.

(3) Design and specification of permanent features such as signage, graphics, casework, and built-in equipment; and the preparation of appropriate schedules.

(4) Coordination of finishes, interior components, lighting, acoustical treatment, electrical, information systems, and mechanical elements.

(5) Preparation of display books or boards showing layout diagrams, special details, and material and color samples, for the purpose of obtaining approval of the design scheme and for facilitating the execution of the design intent through the construction contract or other procurement.

(6) Description of interior design intentions for enhancement of energy efficiency, safety, health, functional flexibility, maintenance, increased personnel performance, and projecting the proper image.

b. **Furniture-Related Interior Design.** General requirements for furniture-related interior design are:

(1) Coordination with all the tasks identified in paragraph 6a above, so that the furniture-related and building-related design schemes reflect a single, coordinated design theme.

(2) Selection and description of furniture and equipment from available Government sources of supply (see Appendix C). Selection will be based on factors indicated in DG 1110-3-122. When Government source items do not meet requirements, purchase specifications to include materials testing and/or rating requirements to meet minimum Federal standards, and any other data necessary for procurement on the open market will be provided.

(3) Preparation of detailed furniture arrangement and placement plans, and coordination with electrical, information systems, and mechanical elements.

(4) Preparation of procurement documents with source data, item identification, color and finish schedules, and cost estimates. Documents will reflect current source data for procurement.

(5) Preparation of display books or boards showing layout diagrams, selected furniture and equipment, material and color samples. Perspectives or sketches may also be necessary to obtaining approval of the design scheme.

(6) Technical consultation during procurement, delivery, and placement, to assure receipt of specified and selected items, and completion and coordination of the overall design scheme.

7. Design Requirements. Preparation of project interior designs will coincide with the project design process described in AR 415-15. An interior design analysis will be prepared as part of the project design analysis required by ER 1110-345-700. Interior design drawings will likewise be prepared as part of the project drawings required by ER 1110-345-710.

a. **Concept Design.** During the concept design phase, those responsible for interior design will meet with representatives of the using activity and the building design team to determine the design concept. The design concept should meet the users functional, physical, and aesthetic needs as defined below.

(1) Functional. Achieve space planning layout which considers all furniture and equipment required to support the users operation. Related design issues include accessibility, privacy, safety, and health.

(2) Physical. Assure that environmental support systems such as electrical, lighting, mechanical,

information systems, and structure meet the users physical requirements.

(3) Aesthetic. Meet the users needs for aesthetic expression. Aesthetic needs are the physical interpretations of the users sociological and psychological needs. Design issues related to these needs include the use of light, color, and texture.

b. **Final Design.** Upon approval of the concept design, those responsible for design will develop the design concept in sufficient detail to assure successful execution. Building-related interior design is the detailed design and specification of building-related elements in the contract documents. Furniture-related interior design includes the detailed design and preparation of procurement documents.

8. **Responsibilities.**

a. **Planning Phase.**

(1) The using activity and installation will:

(a) Provide design and design review funds for furniture-related design, as indicated in paragraphs 10 and 11 of this regulation.

(b) Provide funds for procurement of furniture and equipment, and indicate these funds on DD Form 1391, as required by AR 415-15.

(c) Identify unique functional requirements related to the interior design of the facility.

(d) Identify existing furniture and equipment to be reused in addition to new furniture and equipment required.

(2) USACE MSC and district commands responsible for design will assist, on a reimbursable basis, in determining preliminary design requirements, indicated in paragraphs 8a(l)(c) and (d) above, during development of the planning and programming documents.

b. **Design Phase.**

(1) The designated representative of the using activity, having final approval authority for the project will review and approve interior design in a manner that is compatible with the provisions of AR 415-15.

(2) USACE MSC and district commands will:

(a) Accomplish interior design services within the scope and methods described herein, and as stated in the programming documents and design directives.

(b) Assure that interior design services are coordinated with the architectural design and reflect the requirements of the using activity.

(c) Verify and validate the technical adequacy and professional quality of the interior design.

c. **Construction and Procurement Phases.**

(1) The using activity and installation have the following responsibilities regarding interior design:

(a) Procurement of furniture and equipment for delivery to coincide as closely as possible with beneficial occupancy of the building.

(b) Tracking of procurement to assure timely receipt of required furniture and equipment.

(c) Warehousing of furniture and equipment until it is required for placement in the building.

(d) Delivery, assembly, and placement of furniture and furnishings at the project site.

(e) Verification that furniture and equipment received meet specifications requirements.

(f) Establishment of a move in date for the user. This date should be coordinated with the USACE MSC or district command to assure adequate time to furnish the facility after it is released for beneficial occupancy.

(2) USACE MSC and district commands have the following responsibilities:

(a) Assure that appropriate information is provided to the using activity to fully describe the interior design intentions, and the maintenance and operational aspects of the building.

(b) Establish beneficial occupancy date so that procurement of furniture and equipment by the using activity or by USACE may be scheduled for a timely delivery.

(3) When USACE provides furniture-related interior design services, the using activity or installation may request the following execution services from USACE on a reimbursable basis:

(a) Technical consultation during procurement, delivery and placement of furniture and equipment.

(b) Assistance in evaluating deviations from specified furniture and equipment to avoid installation of inferior or inappropriate furniture and equipment.

(c) Services in support of the using activities responsibilities indicated in paragraphs 8c(l)(a), (b), and (e) above including supervision of assembly and placement.

9. Methods of Accomplishment. Design and design review shall be accomplished by, or in consultation with professional interior designers and architects. Qualification of designers will be based on completion of a recognized program of academic training in interior design and demonstrated interior design experience. When furniture-related services are provided, those services should be accomplished by the same designer providing the building-related services if possible. Methods for accomplishment of interior design may include in-house capability, Architect Engineer (A-E) contract, separate interior design service contract, or indefinite delivery contract for interior design services.

10. Funding. Project design funds will be used for building-related interior design services. Funds for furniture-related interior design services, including design reviews, will be provided separately by the using activity, except as indicated in paragraph 11 of this regulation.

11. Exception. Because the furniture-related interior design is critical to the operational effectiveness of living, administrative, and operational facilities, USACE encourages the use of furniture-related interior design services. USACE will provide furniture-related interior design services as an integral part of the building design without additional cost to the using activity for Category Codes 610, 310 & 171 and for DA Standard Design Packages with comprehensive interior designs. The using activity, however, must commit funds for the procurement of the furniture on the DD Form 1391 and request this additional service.

FOR THE COMMANDER:

WILLIAM D. BROWN
Colonel, Corps of Engineers
Chief of Staff

3 Appendices
APP A - References
APP B - Definitions
APP C - Government Sources of Supply

APPENDIX A

REFERENCES

1. Federal Acquisition Regulations (FAR).

a. Part 8, Required Sources of Supplies and Services.

b. Part 10, Specifications, Standards, and Other Purchase Descriptions.

2. Department of the Army.

a. AR 415-15, Military Construction, Army (MCA) Program Development.

b. AR 415-17, Cost Estimating for Military Programming.

3. U.S. Army Corps Of Engineers.

a. ER 1110-345-700, Engineering and Design, Design Analyses.

b. ER 1110-345-710, Engineering and Design, Drawings.

c. DG 1110-3-122, Design Guide for Interiors.

d. Architectural and Engineering Instructions (AEI), Design Criteria issued by HQUSACE (CEMP-EA). Additional copies are available from HQUSACE (CEMP-EA), 20 Massachusetts Ave., N.W., Washington, DC 20314-1000.

e. Architectural and Engineering Instructions (AEI), Medical Design Standards, issued by HQUSACE (CEMP-EM). Additional copies are available from HQUSACE (CEMP-EM), 20 Massachusetts Ave., N.W., Washington, DC 20314-1000.

APPENDIX B

DEFINITIONS

1. Building-related Interior Design. Design in support of installed building equipment and personal property fixed are an integral part of building-related interior design.

a. Installed Building Equipment. Construction elements of building-related interior design are defined as installed building equipment by Appendix H, Equipment Installation, of AR 415-15. They consist of items that are affixed or built into the facility and become an integral part of the facility. Installed building equipment is MILCON funded and is provided as part of the construction contract. Examples of installed building equipment associated with building-related interior design are listed in paragraph H-1 of AR 415-15.

b. Personal Property Fixed. Personal property fixed is defined by AR 415-15, Appendix H as capital equipment and other equipment of a movable nature that has been fixed in place or attached to real property, but may be severed or removed from buildings without destroying the usefulness of the facilities. Personal property fixed is normally funded as Other Procurement, Army (OPA), however, the utility support for this equipment is MILCON funded. Equipment installation may be funded by either fund source, and installation responsibilities must be defined in the contract documents.

c. Pre-wired Work Stations. Pre-wired work stations are a special area within personal property fixed.

(1) Physical Definition. The physical characteristics of a pre-wired work station should include posts, panels, partitions, wiring for electrical and information systems, task lighting, and partition hung components to support individual or group work efforts. Both panel to panel and post and panel systems are acceptable. Additional system components are ambient lighting and partition supported files. Pre-wired work stations do not include movable furniture and furnishings such as chairs, stand alone file cabinets, coat hooks, file trays, or similar accoutrements.

(2) Functional Definition. A pre-wired work station should, at a minimum, provide for the following functions:

(a) An acoustically treated enclosure defining the limits of an individual or a shared use work station.

(b) Adequate work surfaces to accommodate the individual's equipment, writing surface, and work layout surface.

(c) Storage space for individual files and supplies.

(d) Task lighting and electrical and information systems outlets to support the individual's equipment.

(3) Planning and Design. When pre-wired work stations are planned as an integral part of new construction or MILCON funded renovation they may be MILCON funded. To obtain MILCON funded pre-wired work stations, they must be justified and itemized on programming documents. Indicate number of work stations, unit cost and total cost as a line item under primary facility. Pre-wired work stations must also be itemized in Government estimates, and contractor pricing.

(4) Construction. MILCON funded pre-wired work stations will be provided by the construction contractor based on project drawings and specifications. When the contractor provides pre-wired work stations, the provisions of the FAR that apply to construction are applicable.

2. Furniture-related Interior Design. Elements associated with furniture-related interior design are defined as personal property moveable by Appendix H of AR 415-15. Elements associated with furniture-

related interior design consist of capital equipment and other equipment of a movable nature. Personal property is generally mission specific and can be separated from the building without destroying its use for another function. Personal property should be financed from Operations and Maintenance, Army (OMA) or Other Procurement, Army (OPA) funds, depending on the investment threshold.

a. Physical Definition. Items associated with furniture-related interior design include, but are not limited to, the following items:

(1) Furniture. Including Desks, Tables, Chairs, Sofas, Ergonomic Seating, Free Standing and Mobile Storage, Free Standing Acoustical Screens, and Modular and Automated Data Processing (ADP) Furniture.

(2) Furnishings. Including Art Work, Curtains, Draperies, and Rugs.

(3) Mission Equipment. Including Computers, ADP, Medical and Dental, Organs and Pianos, Simulators and Training Aids, Printing,
Photographic, and Shop Equipment.

b. Planning and Design. Users should provide OMA or OPA funding for furniture, furnishings, equipment and for the associated installation costs. When furniture-related interior design is requested as part of a MILCON project, furniture and furnishings should be itemized on DD Form 1391 and Government estimates. DD Form 1391 should indicate furniture requirements in Section 13, and furniture cost itemized in Section 2G.

c. Procurement. Procurement of furniture and furnishings is considered Government procurement, and the provisions of FAR Parts 8 and 10 apply. See Appendix C for Government Sources of Supply. When systems furniture is provided as part of an OMA funded renovation project or a reconfiguration, it is to be procured as furniture.

PROCUREMENT PROCEDURES FOR FURNITURE

A. THE MISSION-COMPREHENSIVE INTERIOR DESIGN PACKAGE

B. PRIORITIES FOR USE OF GOVERNMENT SUPPLY SOURCES IN ACCORDANCE WITH FEDERAL ACQUISITION REGULATION 8.001.

- AGENCY INVENTORIES
- EXCESS FROM OTHER AGENCIES
- FEDERAL PRISON INDUSTRIES
- COMMITTEE FOR PURCHASE FROM THE BLIND AND OTHER SEVERELY HANDICAPPED
- GSA STOCK PROGRAMS (DEFENSE LOGISTICS AGENCY, DEPARTMENT OF VETERANS AFFAIRS, MILITARY INVENTORY CONTROL POINTS.
- MANDATORY FEDERAL SUPPLY SCHEDULES
- OPTIONAL USE OF FEDERAL SUPPLY SCHEDULES
- COMMERCIAL SOURCES

C. PROCURING FROM THE FEDERAL PRISON INDUSTRIES, REQUESTS FOR WAIVER.

D. GSA STOCK PROGRAMS

E. PROCUREMENT FROM FEDERAL SUPPLY SCHEDULES

- COMPETITION REQUIREMENTS
- MAXIMUM ORDER LIMITATIONS

F. PROCUREMENT FROM OPEN MARKET SOURCES

- UNDER $25,000, REQUEST FOR QUOTATIONS
- OVER $25,000, INVITATION FOR BID (IFB'S)

G. SPECIFICATIONS

H. COMMUNICATION

APPENDIX C

GOVERNMENT SOURCES OF SUPPLY

1. Priority of Sources. FAR, Part 8.001, indicates the order of preference for acquisition of supplies and services for the Federal Government.

2. Federal Prison Industries (FPI). FPI is a mandatory source of supply and should be considered in accordance with the requirements of FAR, Part 8.6. A furniture catalog and other product information are available from UNICOR, Federal Prisons Industries, Inc., 320 Ist Street, N.W., Washington, DC 20534.

3. General Services Administration (GSA). The use of Federal Supply Schedules is optional for Department of Defense agencies. GSA schedules do provide a wide selection of furniture and furnishing products. GSA Federal Supply Service source information is available through the Centralized Mailing Lists Services (CMLS), P.O. Box 6477, Fort Worth, TX 76115.

WAIVER REQUEST PROCEDURE

In accordance with Title 18, U.S.C., Sec. 4124(a) and Federal Acquisition Regulations subpart 8.6, Federal Prison Industries, Inc. (UNICOR) has a mandatory preference for supplies listed in its "Schedule of Products." When an ordering office wishes to purchase supplies listed in the "Schedule" from sources other than UNICOR, it will submit a request for waiver to the Customer Service Manager, Federal Prison Industries, Inc. (UNICOR). The request will be directed as follows:

Federal Prison Industries, Inc.
320 First St., N. W. (ACACIA)
Washington, DC 20534
Attn: Customer Service Manager

Telephone: 1-800-827-3168
Facsimile: 202-628-1597

Federal Prison Industries, Inc. (UNICOR) will consider requests for waivers based on documented disparities in price, inability to meet reasonable delivery dates, and disqualifying variations in function and "match." Requests will be considered in connection with the standards set out in its Waiver Policy. UNICOR has attempted to set out with the greatest degree of objectivity the standards that it applies in making decisions on waivers. While there must inevitably be some discretion exercised in these decisions, UNICOR will always give careful consideration to a customer's request. It is guided in all its decisions by its commitment to "Total Customer Satisfaction."

A. Requests shall contain the following information:

1. As complete a description as possible of the required items: e.g., National Stock Number, descriptive literature such as cuts, illustrations, drawings, and brochures that explain the characteristics and/or the construction. When applicable, e.g., items built to a military or Federal specification, a complete technical data package should be submitted.
2. Quantity required, price of preferred item and required delivery date.
3. In situations where the waiver request is based on functional differences, a comparison of the functional differences between the requested item and the "schedule" item should be provided identifying as a minimum:

   (a) inadequacies of the "schedule" item to perform the required functions; and
   (b) economic, or other advantages of the item requested.
4. Estimated annual usage or future need for similar items or a statement that the requirement is nonrecurring and no future need is anticipated. Indicate if this or similar items have previously been purchased from UNICOR.

B. UNICOR delivery schedules are consistent with delivery schedules for comparable items appearing on General Services Administration Federal Supply Schedules (FSS). Where schedules for comparable items do not exist, deliveries are consistent with good commercial practices. In the event that delivery times shorter than normally available from the FSS or commercial sources are required, certification, in writing from the contracting officer must be provided stating the reason for the shorter delivery requirement.

C. All factors are considered when a determination is made. This includes customer needs, current factory loading and future requirements. Each request is evaluated on its own merits. UNICOR policy does not permit blanket waivers but evaluates each request on a case-by-case basis considering, primarily, the needs of the customer.

D. Appeals to waiver denials can be made by forwarding reasons for the appeal to the Customer Service Manager by letter. Please note in your transmission that this is an appeal and reference the original waiver identification number. Appeals should be transmitted no later than 30 days after receipt of the original decision.

E. Every attempt will be made to respond to waiver requests and appeals within five (5) working days of receipt.

F. Ordering offices should not initiate action to acquire similar items from sources other than UNICOR until a request for waiver is approved.

To check the status of your request or to inquire about prices, delivery, order status or other concerns please call the UNICOR Customer Service Hotline:

1-800-827-3168

8.403 Types of Federal Supply Schedules.

8.403-1 Single-award schedules.

Single-award schedules cover contracts made with one supplier at a stated price for delivery to a geographic area as defined in the schedule. Most schedules contain all information necessary for placing orders. Some schedules specify that contractor catalogs must be used for additional ordering information to aid in the selection of fabrics, colors, and similar variables.

8.403-2 Multiple-award schedules.

Multiple-award schedules cover contracts made with more than one supplier for comparable supplies and services. Contracts are awarded to suppliers of the same generic types of items at varying prices for delivery within the same geographic area. Contractor catalogs and pricelists must be used with the schedules to prepare delivery orders. The catalogs and pricelists contain information such as item descriptions, prices and discounts, order limitations, and delivery.

8.403-3 New Item Introductory Schedule.

The New Item Introductory Schedule (NIIS) provides the means to introduce new or improved products into the Federal Supply System. The schedule lists brand names of products available from various suppliers. With the exception of GSA, the only mandatory user of this schedule, Federal agencies and agencies authorized by law or agreement may use the NIIS on an optional basis. Ordering offices must use contractor catalogs and pricelists with the schedule to prepare delivery orders.

8.403-4 International Federal Supply Schedule.

(a) The International Federal Supply Schedule (IFSS) provides sources of supply (supplies and services) at reasonable prices to U.S. Government activities located overseas. The use of the schedule is mandatory only on GSA.

(b) The schedule is divided into two sections. Section A includes those items which were awarded under sealed bid procedures, while Section B covers items that were awarded under negotiated procedures.

(c) Ordering offices need to review the information in the schedule and any applicable contractor's catalogs/price lists to ensure the proper placement of orders. Orders are placed directly with the contractors.

(d) Ordering offices shall forward copies of any orders (at the time the orders are issued) to the contracting office designated in the IFSS.

8.404 Using schedules.

(a) The planning, solicitation, and award phases of Federal Supply Schedules comply with FAR requirements. Consequently, contracting officers need not seek further competition, synopsize the solicitation or award, determine fair and reasonable pricing, or consider small business-small purchase set-aside procedures when placing an order under a Federal Supply Schedule.

(b) Before soliciting commercial sources, executive agencies shall determine if the required supplies or services, or similar supplies or services fulfilling the same purpose, are available from schedules (see FPMR 101-26.4). If so, the ordering office shall proceed in accordance with the procedure of 8.404-1 or 8.404-2, as appropriate.

(c) In the case of mandatory schedules, ordering offices shall not (1) solicit bids, proposals, quotations, or otherwise test the market solely for the purpose of seeking alternative sources to Federal Supply Schedules; or (2) request formal or informal quotations from Federal Supply Schedule contractors for the purpose of price comparisons.

8.404-1 Mandatory use. See Deviation per AL-91-7

Schedules identify executive agencies required to use them as mandatory sources of supply. The single-award schedule shall be used as a primary source and the multiple-award schedule as a secondary source. The following are exceptions to the mandatory-use requirement:

(a) *Urgent requirements.* When an ordering office requires supplies or services with a shorter delivery time than specified in the schedules, and time permits, the ordering office shall request the contractor by letter, telegram, mailgram, or telephone conversation (confirmed in writing) to state the best delivery time that can be met under the circumstances and subject to all other terms and conditions of the schedule contract. The contractor shall be instructed to reply to the inquiry within not more than 3 workdays after receipt, by the same or a faster communications medium than the one by which the inquiry was received. If the contractor offers accelerated delivery acceptable to the ordering office, orders shall obligate the contractor to make the shorter delivery under all other terms and conditions of the contract. When the contractor fails to reply, or the best delivery time does not meet the ordering office's requirements, use of the schedule is not mandatory.

(b) *Small requirements.* Dollar or quantity minimums are established for most schedules, below which ordering offices are not obligated to order and contractors are not obligated to accept orders. Ordering offices may submit orders below established minimums, subject to the contractor's acceptance. Once an order is accepted, the contractor is obligated to perform according to all the terms and conditions of the contract. Some schedules require the contractor to accept orders below the dollar or quantity minimum, but authorize the contractor to include a service charge up to a certain dollar amount. In these cases, the

8.405 Ordering office responsibilities.

Ordering offices shall place orders directly with contractors and shall perform contract administration on individual orders. Ordering offices should deal directly with contractors concerning contract performance (see 41 CFR 101-26.403-1).

8.405-1 Ordering from multiple-award schedules.

When ordering from multiple award schedules, ordering offices shall use the procedures set forth below. When these procedures are followed, orders placed against schedules will result in the lowest overall cost alternative to meet the needs of the Government.

(a) Orders should be placed with the schedule contractor offering the lowest delivered price available. The ordering office shall review the schedule price lists that are reasonably available at the ordering office. Where the ordering office has available fewer than three price lists from current schedule contractors that offer the required items, the ordering activity shall obtain additional price lists from schedule contractors listed in the GSA schedule for the required items. The ordering office shall fully justify in the contract file orders for a line item exceeding the price reasonableness verification threshold at 13.106 placed at other than the lowest price identified in its review. Justification for ordering a higher priced item may be based on such considerations as—

(1) Delivery time in terms of actual need that cannot be met by a contractor offering a lower price;

(2) Specific or unusual requirements such as differences in performance characteristics;

(3) Compatibility with existing equipment or systems;

(4) Trade-in considerations that favor a higher priced item and produce the lowest net cost; and

(5) Special features of one item not provided by comparable items that are required in effective program performance.

(b) When two or more items at the same delivered price will meet an ordering office's needs, the ordering office shall give preference to the items of small business and/or labor surplus area concerns by following the order of priority in 14.407-6 for equal low bids.

(c) When a schedule lists both foreign and domestic items that will meet the ordering office's needs, the ordering office shall apply the procedures of Part 25, Foreign Acquisition.

(d) If an item available from a multiple-award schedule is ordered from the schedule contractor at a price lower than the schedule price, the ordering office shall notify the schedule contracting office within 10 days.

8.405-2 Order placement.

Ordering offices may use Optional Form 347, or an agency-prescribed form, to order items from schedules and shall place orders directly with the contractor within the limitations specified in each schedule. Orders shall include, at a minimum, the following information in addition to any information required by the schedule:

(a) Complete shipping and billing addresses.

(b) Contract number and date.

(c) Agency order number.

(d) F.o.b. delivery point; i.e., origin or destination.

(e) Discount terms.

(f) Delivery time.

(g) Special item number or national stock number.

(h) Brief, complete description of each item (when ordering by model number, features and options such as color, finish, and electrical characteristics, if available, must be specified).

(i) Quantity and any variation in quantity.

(j) Number of units.

(k) Unit price.

(l) Total price of order.

(m) Points of inspection and acceptance.

(n) Other pertinent data; e.g., delivery instructions or receiving hours and size-of-truck limitation.

(o) Marking requirements.

(p) Level of preservation, packaging, and packing.

8.405-3 Inspection and acceptance.

(a) Consignees shall inspect supplies at destination except when—

(1) The schedule provides for the schedule contracting agency to perform source inspection (in this case, the schedule will indicate that mandatory source inspection is required); or

(2) A schedule item is covered by a product description, and the ordering office determines that the schedule contracting agency's inspection assistance is needed (inspection assistance may be based on the ordering volume, the complexity of items, or the past performance of the supplier).

(b) When the schedule contracting agency performs the inspection, as specified in the schedule, the ordering office will provide two copies of the order specifying source inspection to the schedule contracting agency. The schedule contracting agency will notify the ordering office of acceptance or rejection of the supplies.

(c) Material inspected at source by the schedule contracting agency, and determined to conform with the product description of the schedule, shall not be reinspected for the same purpose. The consignee shall limit inspection to quantity and condition on receipt.

(d) Unless otherwise provided in the schedule, acceptance shall be conclusive except as regards latent defects, fraud, or such gross mistakes as amount to fraud.

8.405-4 Delinquent performance.

When the contractor fails to perform on the order, the

APPENDIX J

DOD MINUMUM ANTITERROISM STANDARDS FOR BUILDINGS

UFC 4-010-01
31 July 2002

UNIFIED FACILITIES CRITERIA (UFC)

DoD MINIMUM ANTITERRORISM STANDARDS FOR BUILDINGS

DISTRIBUTION STATEMENT A: Approved for Public Release;
Distribution is unlimited.

UNIFIED FACILITIES CRITERIA (UFC)

DoD MINIMUM ANTITERRORISM STANDARDS FOR BUILDINGS

Any copyrighted material included in this UFC is identified at its point of use.
Use of the copyrighted material apart from this UFC must have the permission of the copyright holder.

UNDER SECRETARY OF DEFENSE (ACQUISITION, TECHNOLOGY, AND LOGISTICS) (Preparing Activity)

J3, DEPUTY DIRECTORATE FOR ANTITERRORISM AND FORCE PROTECTION, JOINT CHIEFS OF STAFF

U.S. ARMY CORPS OF ENGINEERS

NAVAL FACILITIES ENGINEERING COMMAND

AIR FORCE CIVIL ENGINEER SUPPORT AGENCY

Record of Changes (changes are indicated by **1**\ ... /**1**/)

Change No.	Date	Location

This UFC supersedes Interim Department of Defense Antiterrorism / Force Protection Construction Standards of 16 December 1999, except that the Interim Standard will remain in effect for fiscal year 2002 and 2003 Military Construction Programs.

FOREWORD

The Unified Facilities Criteria (UFC) system is prescribed by MIL-STD 3007 and provides planning, design, construction, sustainment, restoration, and modernization criteria, and applies to the Military Departments, the Defense Agencies, and the DoD Field Activities in accordance with USD(AT&L) Memorandum dated 29 May 2002. UFC will be used for all DoD projects and work for other customers where appropriate.

UFC are living documents and will be periodically reviewed, updated, and made available to users as part of the Services' responsibility for providing technical criteria for military construction. Headquarters, U.S. Army Corps of Engineers (HQUSACE), Naval Facilities Engineering Command (NAVFAC), and Air Force Civil Engineer Support Agency (AFCESA) are responsible for administration of the UFC system. Defense agencies should contact the preparing service for document interpretation and improvements. Technical content of UFC is the responsibility of the cognizant DoD working group. Recommended changes with supporting rationale should be sent to the respective service proponent office by the following electronic form: Criteria Change Request (CCR). The form is also accessible from the Internet sites listed below.

UFC are effective upon issuance and are distributed only in electronic media from the following sources:

- Unified Facilities Criteria (UFC) Index http://65.204.17.188//report/doc_ufc.html.
- USACE TECHINFO Internet site http://www.hnd.usace.army.mil/techinfo .
- NAVFAC Engineering Innovation and Criteria Office Internet site http://criteria.navfac.navy.mil.
- Construction Criteria Base (CCB) system maintained by the National Institute of Building Sciences at Internet site http://www.ccb.org .

Hard copies of UFC printed from electronic media should be checked against the current electronic version prior to use to ensure that they are current.

AUTHORIZED BY:

Dwight A. Beranek, P.E.
Chief, Engineering and Construction Division
U.S. Army Corps of Engineers

Dr. James W Wright, P.E.
Chief Engineer
Naval Facilities Engineering Command

KATHLEEN I. FERGUSON, P.E.
The Deputy Civil Engineer
DCS/Installations & Logistics
Department of the Air Force

Frank Lane
Director of Analysis & Investment
Deputy Under Secretary of Defense
for Installations and Environment
Department of Defense

FOREWORD (continued)

This specific document is also issued under the authority of DoD Instruction Number 2000.16, *DoD Antiterrorism Standards* which requires DoD Components to adopt and adhere to common criteria and minimum construction standards to mitigate antiterrorism vulnerabilities and terrorist threats.

This document applies to the Office of the Secretary of Defense (OSD); the Military Departments (including their National Guard and Reserve Components); the Chairman, Joint Chiefs of Staff and Joint Staff; the Combatant Commands; the Office of the Inspector General of the Department of Defense; the Defense Agencies; the Department of Defense Field Activities; and all other organizational entities within the Department of Defense hereafter referred to collectively as “the DoD Components.”

The standards established by this document are minimums set for DoD. Each DoD Component may set more stringent antiterrorism building standards to meet the specific threats in its area of responsibility.

Any changes, updates, or amendments to this particular UFC must have the approval of the DoD Engineering Senior Executive Panel (ESEP).

This document is effective immediately and is mandatory for use by all the DoD Components.

CONTENTS

Page

CHAPTER 1 INTRODUCTION

Paragraph 1-1 GENERAL 1-1
1-1.1 Dynamic Threat Environment 1-1
1-1.2 Responsibility 1-1
1-1.3 Planning and Integration 1-1
1-2 REFERENCES 1-2
1-3 STANDARDS AND RECOMMENDATIONS 1-2
1-4 INTENT 1-2
1-5 LEVELS OF PROTECTION 1-3
1-5.1 DoD Component Standards 1-3
1-5.2 Threat-Specific Requirements 1-3
1-5.3 Critical Facilities 1-3
1-5.4 Explosive Safety Standards 1-3
1-6 APPLICABILITY 1-4
1-6.1 New Construction 1-4
1-6.2 Existing Buildings 1-4
1-6.3 Building Additions 1-5
1-6.4 Leased Buildings 1-5
1-6.5 Expeditionary and Temporary Structures 1-5
1-6.6 National Guard Buildings 1-5
1-6.7 Exemptions 1-6
1-7 PROGRAMMING 1-6
1-7.1 Documentation 1-6
1-7.2 Funding Thresholds 1-6
1-8 INFORMATION SENSITIVITY 1-6
1-8.1 Distribution 1-7
1-8.2 Posting to the Internet 1-7
1-8.3 Plans and Specifications 1-7
1-8.4 Design-Build Contracts 1-7
1-9 Interim Design Guidance 1-7

CHAPTER 2 PHILOSOPHY, DESIGN STRATEGIES, AND ASSUMPTIONS

Paragraph 2-1 GENERAL 2-1
2-2 PHILOSOPHY 2-1
2-2.1 Time 2-1
2-2.2 Master Planning 2-1
2-2.3 Design Practices 2-1
2-3 DESIGN STRATEGIES 2-2
2-3.1 Maximize Standoff Distance 2-2
2-3.2 Prevent Building Collapse 2-2
2-3.3 Minimize Hazardous Flying Debris 2-2
2-3.4 Provide Effective Building Layout 2-2
2-3.5 Limit Airborne Contamination 2-2

2-3.6 Provide Mass Notification 2-3
2-3.7 Facilitate Future Upgrades 2-3
2-4 ASSUMPTIONS 2-3
2-4.1 Baseline Threat 2-3
2-4.2 Controlled Perimeter....2-4
2-4.3 Levels of Protection 2-4
2-4.4 Minimum Standoff Distances....2-5
2-4.5 Exempted Building Types....2-5
2-4.6 Policies and Procedures....2-9
2-4.7 Design Criteria.... 2-10
2-4.8 Enhanced Fire Safety 2-10
2-4.9 Training 2-10
2-4.10 Expeditionary and Temporary Structures 2-10
2-4.11 Leased Buildings 2-10

APPENDIX A DEFINITIONS....A-1

APPENDIX B DoD ANTITERRORISM STANDARDS FOR NEW AND EXISTING BUILDINGS B-1

APPENDIX C RECOMMENDED ADDITIONAL ANTITERRORISM MEASURES FOR NEW AND EXISTING BUILDINGS....C-1

APPENDIX D DoD ANTITERRORISM STANDARDS FOR EXPEDITIONARY AND TEMPORARY STRUCTURES....D-1

FIGURES

Figure Title

B-1 Standoff Distances and Building Separation – Controlled Perimeter B-3
B-2 Standoff Distances and Building Separation – No Controlled Perimeter... B-3
D-1 Standoff Distances and Separation for Expeditionary and Temporary Structures..... D-6

TABLES

Table Title

2-1 Levels of Protection – New Buildings 2-6
2-2 Levels of Protection – Existing Buildings..... 2-7
2-3 Levels of Protection – Expeditionary and Temporary Structures..... 2-8
B-1 Minimum Standoff Distances and Separation for New and Existing Buildings B-2
D-1 Minimum Standoff Distances and Separation for Expeditionary and Temporary Structures D-5

CHAPTER 1

INTRODUCTION

1-1 **GENERAL.** This document represents a significant commitment by DoD to seek effective ways to minimize the likelihood of mass casualties from terrorist attacks against DoD personnel in the buildings in which they work and live.

1-1.1 **Dynamic Threat Environment.** Terrorism is real, evolving, and continues to increase in frequency and lethality throughout the world. The unyielding, tenacious, and patient nature of the terrorists targeting DoD interests forces us to closely examine existing policies and practices for deterring, disrupting, and mitigating potential attacks. Today, terrorist attacks can impact anyone, at any time, at any location, and can take many forms. Deterrence against terrorist attacks begins with properly trained and equipped DoD personnel employing effective procedures. While terrorists have many tactics available to them, they frequently use explosive devices when they target large numbers of DoD personnel. Most existing DoD buildings offer little protection from terrorist attacks. By applying the Minimum Antiterrorism Standards for Buildings described in this document, we become a lesser target of opportunity for terrorists.

1-1.2 **Responsibility.** Protecting people on a DoD installation or site must start with an understanding of the risk of a terrorist attack. Application of the standards herein should be consistent with the perceived or identified risk. Everyone in DoD is responsible for protecting our people and other resources.

1-1.2.1 **Individuals.** Each DoD employee, contractor, or vendor is responsible for minimizing opportunities for terrorists to threaten or target themselves, their co-workers, and their families on DoD installations or sites.

1-1.2.2 **Installation Commanders.** The installation commander must protect the people on his/her installation, or site, by managing and mitigating the risk to those people in the event of a terrorist attack. The installation commander is responsible for applying the standards herein, consistent with the identified or perceived risk of DoD people being hurt or killed.

1-1.2.3 **Service Secretaries and Agency Heads.** The heads of DoD Components shall ensure compliance and issue guidance to implement these standards. That guidance will include direction to require the installation commander to notify or seek approval from a major command or claimant or higher headquarters level if a new construction or renovation project, or a leased facility, will not meet any one or more of the standards. Heads of DoD Components will establish plans and procedures to mitigate risks in such situations.

1-1.3 **Planning and Integration.** When the best procedures, proper training, and appropriate equipment fail to deter terrorist attacks, adherence to these standards goes far in mitigating the possibility of mass casualties from terrorist attacks against DoD personnel in the buildings in which they work and live. Although predicting the specific threat to everyone is not possible, proper planning and integration of those plans provides a solid foundation for preventing, and if necessary reacting, when

terrorist incidents or other emergencies unfold. An effective planning process facilitates the necessary decision making, clarifies roles and responsibilities, and ensures support actions generally go as planned. A team consisting of the chain of command and key personnel from all appropriate functional areas who have an interest in the building and its operation executes this planning process. The team should include, as a minimum, antiterrorism/force protection, intelligence, security, and facility engineering personnel. This team is responsible for identifying requirements for the project, facilitating the development of supporting operational procedures, obtaining adequate resources, and properly supporting all other efforts needed to prudently enhance protection of the occupants of every inhabited DoD building. For further information on planning and integration, refer to the *DoD Security Engineering Manual*.

1-2 **REFERENCES.**

- Interim Department of Defense Antiterrorism / Force Protection Construction Standards, December 16, 1999 (hereby cancelled)
- DoD Instruction 2000.16, DoD Antiterrorism Standards, June 14, 2001.
- DoD Handbook 2000.12-H, Protection of DoD Personnel and Activities Against Acts of Terrorism and Political Turbulence, February 1993
- American Society of Civil Engineers Standard (ANSI/ASCE) 7-98, Minimum Design Loads for Buildings and Other Structures, January 2000
- Unified Facilities Criteria (UFC) 4-010-02, *DoD Security Engineering Manual*, (Draft)
- Unified Facilities Criteria (UFC) 4-010-10, *DoD Minimum Antiterrorism Standoff Distances for Buildings; (For Official Use Only (FOUO))*
- Sections 2805(a)(1) and 2805(c)(1) of Title 10, US Code
- Security Engineering Working Group web site (http://sewg.nwo.usace.army.mil)
- DoD 6055.9-STD, DoD Ammunition and Explosive Safety Standards, July 1999

1-3 **STANDARDS AND RECOMMENDATIONS.** Mandatory DoD minimum antiterrorism standards for new and existing inhabited buildings are contained in Appendix B. Additional recommended measures for new and existing inhabited buildings are included in Appendix C. Mandatory DoD minimum antiterrorism standards for expeditionary and temporary structures are contained in Appendix D.

1-4 **INTENT.** The intent of these standards is to minimize the possibility of mass casualties in buildings or portions of buildings owned, leased, privatized, or otherwise occupied, managed, or controlled by or for DoD. These standards provide appropriate, implementable, and enforceable measures to establish a level of protection

against terrorist attacks for all inhabited DoD buildings where no known threat of terrorist activity currently exists. While complete protection against all potential threats for every inhabited building is cost prohibitive, the intent of these standards can be achieved through prudent master planning, real estate acquisition, and design and construction practices. Where the minimum standoff distances detailed in these standards are met, most conventional construction techniques can be used with only marginal impact on the total construction or renovation cost. The financial impact of these standards will be significantly less than the economic and intangible costs of a mass casualty event.

1-5 **LEVELS OF PROTECTION.** The levels of protection provided by these standards meet the intent described above and establish a foundation for the rapid application of additional protective measures in a higher threat environment. These standards may be supplemented where specific terrorist threats are identified, where more stringent local standards apply, or where local commanders dictate additional measures. Detailed descriptions of the levels of protection are provided in Chapter 2 and the *DoD Security Engineering Manual*.

1-5.1 **DoD Component Standards.** Where DoD Component standards such as geographic Combatant Commander standards address unique requirements, those standards will be incorporated in accordance with their implementing directives, but not to the exclusion of these standards.

1-5.2 **Threat-Specific Requirements.** Where a design basis threat is identified whose mitigation requires protective measures beyond those required by these standards or DoD Component standards, those measures will be developed in accordance with the provisions of the *DoD Security Engineering Manual*. The provisions of the *DoD Security Engineering Manual* include the design criteria that will be the basis for the development of the protective measures, estimates of the costs of those measures, and detailed guidance for developing the measures required to mitigate the identified threat. The design criteria include the assets to be protected, the threat to those assets, and the desired level of protection. Use of the *DoD Security Engineering Manual* will ensure uniform application, development, and cost estimation of protective measures throughout DoD.

1-5.3 **Critical Facilities.** Buildings that must remain mission operational during periods of national crisis and/or if subjected to terrorist attack should be designed to significantly higher levels of protection than those provided by these standards.

1-5.4 **Explosive Safety Standards.** These antiterrorism standards establish criteria to minimize the potential for mass casualties and progressive collapse from a terrorist attack. DoD 6055.9-STD, *DoD Ammunition and Explosive Safety Standards* as implemented by Service component explosive safety standards, establish acceptable levels of protection for accidental explosions of DoD-titled munitions. The explosive safety and antiterrorism standards address hazards associated with unique events; therefore, they specify different levels of protection. Compliance with both standards is required. Where conflicts arise, the more stringent criteria will govern.

1-6 **APPLICABILITY.** These standards apply to all DoD Components, to all DoD inhabited buildings, and to all DoD expeditionary and temporary structures in accordance with the following:

1-6.1 **New Construction.** Implementation of these standards is mandatory for all new construction regardless of funding source in accordance with the following:

1-6.1.1 **Military Construction (MILCON).** These standards apply to MILCON projects starting with the Fiscal Year 2004 Program. Projects programmed or designed under the Interim DoD Antiterrorism / Force Protection Construction Standards do not have to be reprogrammed or redesigned to meet the requirements of these standards. The provisions of the Interim Standards will apply to those projects. Due to minor changes between these standards and the Interim Standards, projects prior to the Fiscal Year 2004 Program should comply with these standards where possible.

1-6.1.2 **Host-Nation And Other Foreign Government Funding.** These standards apply to new construction funded under host-nation agreements or from other funding sources starting in Fiscal Year 2004 or as soon as negotiations with the foreign governments can be completed.

1-6.1.3 **Other Funding Sources.** These standards apply to all new construction projects funded by sources other than MILCON (such as Non-Appropriated Funds, Operations and Maintenance, and Working Capital Funds) starting with Fiscal Year 2004. Projects funded prior to that fiscal year should comply with these standards where possible.

1-6.2 **Existing Buildings.** These standards will apply to existing facilities starting with the Fiscal Year 2004 program when triggered as specified below, regardless of funding source. Projects funded prior to that fiscal year should comply with these standards where possible. For existing leased buildings see paragraph 1-6.4.

1-6.2.1 **Major Investments.** Implementation of these standards to bring an entire building into compliance is mandatory for all DoD building renovations, modifications, repairs, and restorations where those costs exceed 50% of the replacement cost of the building except as otherwise stated in these standards. The 50% cost is exclusive of the costs identified to meet these standards. Where the 50% threshold is not met, compliance with these standards is recommended.

1-6.2.2 **Conversion of Use.** Implementation of these standards is mandatory when any portion of a building is modified from its current use to that of an inhabited building, billeting, or a primary gathering building for one year or more. Examples would include a warehouse (uninhabited) being converted to administrative (inhabited) use and an inhabited administrative building being converted to a primary gathering building or billeting.

1-6.2.3 **Glazing Replacement.** Because of the significance of glazing hazards in a blast environment, implementation of the glazing provisions of these standards is mandatory for existing inhabited buildings within any planned window or door glazing

replacement project. Such replacements may require window frame modification or replacement.

1-6.3 **Building Additions.** Additions to existing inhabited buildings shall comply with the minimum standards for new buildings. If the addition is 50% or more of the gross area of the existing building, the existing building shall comply with the minimum standards for existing buildings.

1-6.4 **Leased Buildings.** DoD personnel occupying leased buildings deserve the same level of protection as those in DoD-owned buildings. Implementation of these standards is therefore mandatory for all facilities leased for DoD use and for those buildings in which DoD receives a space assignment from another government agency except as established below. This requirement is intended to cover all situations, including General Services Administration space, privatized buildings, and host-nation and other foreign government buildings. This requirement is applicable for all new leases executed on or after 1 October 2005 and to renewal or extension of any existing lease on or after 1 October 2009. Leases executed prior to the above fiscal years will comply with these standards where possible.

1-6.4.1 **Partial Occupancy.** These standards only apply where DoD personnel occupy leased or assigned space constituting at least 25% of the net interior useable area or the area as defined in the lease, and they only apply to that portion of the building that is occupied by DoD personnel.

1-6.4.2 **New Buildings.** Buildings that are built to lease to DoD as of the effective date established above shall comply with the standards for new construction.

1-6.4.3 **Existing Buildings.** New leases or renewals of leases of existing buildings will trigger the minimum standards for existing buildings in accordance with the effective dates established above.

1-6.5 **Expeditionary and Temporary Structures.** Implementation of these standards is mandatory for all expeditionary and temporary structures that meet the occupancy criteria for inhabited or primary gathering buildings or billeting. See Appendix D for structure types that meet the expeditionary and temporary structures criteria.

1-6.5.1 **New Structures.** These standards apply to all new expeditionary sites effective immediately.

1-6.5.2 **Existing Structures.** These standards will apply to all existing expeditionary activities beginning in Fiscal Year 2004. Prior to that fiscal year, existing expeditionary structures should comply with these standards where possible.

1-6.6 **National Guard Buildings.** Any National Guard building that uses Federal funding for new construction, renovations, modifications, repairs, restorations, or leasing and that meets the applicability provisions above, will comply with these standards.

1-6.7 **Exemptions.** Unless DoD Components dictate otherwise, the following buildings are exempt from requirements of these standards as specified below. However, compliance with these standards for those buildings is recommended where possible. In addition, there are some exemptions to elements of individual standards that are included in the text of those standards in appendix B. The rationale for all exemptions is detailed in chapter 2.

1-6.7.1 **Family Housing With 12 Units Or Fewer Per Building.** These buildings are exempt from all provisions of these standards.

1-6.7.2 **Stand-Alone Franchised Food Operations.** These buildings are exempt from standoff distances to parking and roadways. All other standards apply.

1-6.7.3 **Stand Alone Shoppettes, Mini Marts And Similarly Sized Commissaries.** These buildings are exempt from standoff distances to parking and roadways. All other standards apply.

1-6.7.4 **Gas Stations And Car Care Centers.** These facilities are exempt from all provisions of these standards.

1-6.7.5 **Medical Transitional Structures And Spaces.** These structures are exempt from standoff distances to parking and roadways. All other standards apply.

1-6.7.6 **Other Transitional Structures And Spaces.** Transitional structures and spaces that will be occupied for less than one year and that are not billeting, primary gathering buildings, or medical transitional structures, are exempt from standoff distances to parking and roadways. All other standards apply.

1-6.7.7 **Recruiting Stations In Leased Spaces.** Recruiting stations located in leased spaces are exempt from all provisions of these standards.

1-7 **PROGRAMMING.**

1-7.1 **Documentation.** The inclusion of these standards into DoD construction or the inclusion of protective measures above the requirements of these standards will be incorporated into the appropriate construction programming documents (such as the DD Form 1391) in accordance with DoD Component guidance. Refer to the *DoD Security Engineering Manual* for guidance on the costs for implementing these standards and for providing protective measures beyond these standards.

1-7.2 **Funding Thresholds.** For existing buildings, these standards are intended solely to correct design deficiencies to appropriately address emergent life-threatening terrorist risks. As a result, funding thresholds for Unspecified Minor Military Construction and Operations and Maintenance funding may be increased in accordance with 10 USC Sections 2805(a)(1) and 2805 (c)(1).

1-8 **INFORMATION SENSITIVITY.** Some information in these standards is exempt from mandatory disclosure under the Freedom of Information Act. The sensitive information that is exempt is the explosive weights upon which the minimum standoff

distances are based, which is included in UFC 4-010-10. Allowing potential aggressors to know the minimum explosive weights that all DoD inhabited buildings are designed to resist could constitute a vulnerability. To minimize the possibility of that information being used against DoD personnel, the following provisions apply:

1-8.1 **Distribution.** Follow governing DoD and Component guidance for specific requirements for handling and distribution of For Official Use Only information. In general, distribution of this document is unlimited. Distribution of the tables (Tables 1 and 2) in UFC 4-010-10 is authorized only to U.S. Government agencies and their contractors. In addition, where it is within Status of Forces Agreements (SOFA) or other similar information exchange agreements, the information in these standards may be distributed to host-nation elements for the purposes of their administration and design of host-nation funded or designed construction.

1-8.2 **Posting To The Internet.** This document may be posted freely to the Internet; however, because the tables (Tables 1 and 2) in UFC 4-010-10 are For Official Use Only they cannot be posted to any web site that is accessible to the general public. In addition, other documents that include information from these standards that are identified as For Official Use Only cannot be posted to web sites accessible to the general public. For Official Use Only information may be posted to protected, non-publicly accessible web sites that comply with standards established by DoD for administration of web sites.

1-8.3 **Plans and Specifications.** Construction plans and specifications should include only that information from this document that is necessary for a contractor to develop a bid on a project. The explosive weights used in these standards shall not be entered into the plans and specifications unless the plans and specifications are properly safeguarded. Plans and specifications may be posted to the Internet in accordance with existing DoD Component guidance, but such documents will not include For Official Use Only information. All plans and specifications for inhabited buildings shall include an annotation that cites the version of these standards that was used for design.

1-8.4 **Design – Build Contracts.** Where design – build contracts are employed, prospective contractors will be responsible for developing a design proposal for that project that may be impacted by provisions of these standards. Where that is the case, consider alternate means to provide sufficient information to support their proposals. Consider for example, either specifying specific design loads or specifying the required standoff distance and providing candidate structural systems that would allow for mitigation of the applicable explosive if that standoff was less than the minimum. Once the design – build contract is awarded the contractor will be eligible to receive this complete document for use in the development of the final design package, but that contractor will be responsible for protecting the integrity of the information throughout the contract and through any subcontracts into which that contractor might enter.

1-9 **Interim Design Guidance.** The *DoD Security Engineering Manual* is currently unpublished. In lieu of referring to the *DoD Security Engineering Manual*, please see the guidance provided on the Security Engineering Working Group website.

CHAPTER 2

PHILOSOPHY, DESIGN STRATEGIES, AND ASSUMPTIONS

2-1 **GENERAL.** The purpose of this chapter is to clarify the philosophy on which these standards are based, the design strategies that are their foundation, and the assumptions inherent in their provisions. Effective implementation of these standards depends on a reasonable understanding of the rationale for them. With this understanding, engineers and security and antiterrorism personnel can maximize the efficiency of their solutions for complying with these standards while considering site-specific issues and constraints that might dictate measures beyond these minimums.

2-2 **PHILOSOPHY.** The overarching philosophy upon which this document is based is that comprehensive protection against the range of possible threats may be cost prohibitive, but that an appropriate level of protection can be provided for all DoD personnel at a reasonable cost. That level of protection is intended to lessen the risk of mass casualties resulting from terrorist attacks. Full implementation of these standards will provide some protection against all threats and will significantly reduce injuries and fatalities for the threats upon which these standards are based. The costs associated with those levels of protection are assumed to be less than the physical and intangible costs associated with incurring mass casualties. Furthermore, given what we know about terrorism, all DoD decision makers must commit to making smarter investments with our scarce resources and stop investing money in inadequate buildings that DoD personnel will have to occupy for decades, regardless of the threat environment. There are three key elements of this philosophy that influence the implementation of these standards.

2-2.1 **Time.** Protective measures needed to provide the appropriate level of protection must be in place prior to the initiation of a terrorist attack. Incorporating those measures into DoD buildings is least expensive at the time those buildings are either being constructed or are undergoing major renovation, repair, restoration, or modification.

2-2.2 **Master Planning.** Many of these standards significantly impact master planning. The most significant such impact will be in standoff distances. If standoff distances are not “reserved” they will be encroached upon and will not be available should they become necessary in a higher threat environment. The master planning implications of these standards are not intended to be resolved overnight. They should be considered to be a blueprint for facilities and installations that will be implemented over decades as those facilities and installations evolve.

2-2.3 **Design Practices.** The philosophy of these standards is to build greater resistance to terrorist attack into all inhabited buildings. That philosophy affects the general practice of designing inhabited buildings. While these standards are not based on a known threat, they are intended to provide the easiest and most economical methods to minimize injuries and fatalities in the event of a terrorist attack. The primary methods to achieve this outcome are to maximize standoff distance, to construct superstructures to avoid progressive collapse, and to reduce flying debris hazards.

These and related design issues are intended to be incorporated into standard design practice in the future.

2-3 **DESIGN STRATEGIES.** There are several major design strategies that are applied throughout these standards. They do not account for all of the measures considered in these standards, but they are the most effective and economical in protecting DoD personnel from terrorist attacks. These strategies are summarized below.

2-3.1 **Maximize Standoff Distance.** The primary design strategy is to keep terrorists as far away from inhabited DoD buildings as possible. The easiest and least costly opportunity for achieving the appropriate levels of protection against terrorist threats is to incorporate sufficient standoff distance into project designs. While sufficient standoff distance is not always available to provide the minimum standoff distances required for conventional construction, maximizing the available standoff distance always results in the most cost-effective solution. Maximizing standoff distance also ensures that there is opportunity in the future to upgrade buildings to meet increased threats or to accommodate higher levels of protection.

2-3.2 **Prevent Building Collapse.** Provisions relating to preventing building collapse and building component failure are essential to effectively protecting building occupants, especially from fatalities. Designing those provisions into buildings during new construction or retrofitting during major renovations, repairs, restorations, or modifications of existing buildings is the most cost effective time to do that. In addition, structural systems that provide greater continuity and redundancy among structural components will help limit collapse in the event of severe structural damage from unpredictable terrorist acts.

2-3.3 **Minimize Hazardous Flying Debris.** In past explosive events where there was no building collapse, a high number of injuries resulted from flying glass fragments and debris from walls, ceilings, and fixtures (non-structural features). Flying debris can be minimized through building design and avoidance of certain building materials and construction techniques. The glass used in most windows breaks at very low blast pressures, resulting in hazardous, dagger-like shards. Minimizing those hazards through reduction in window numbers and sizes and through enhanced window construction has a major effect on limiting mass casualties. Window and door designs must treat glazing, frames, connections, and the structural components to which they are attached as an integrated system. Hazardous fragments may also include secondary debris such as those from barriers and site furnishings.

2-3.4 **Provide Effective Building Layout.** Effective design of building layout and orientation can significantly reduce opportunities for terrorists to target building occupants or injure large numbers of people.

2-3.5 **Limit Airborne Contamination.** Effective design of heating, ventilation, and air conditioning (HVAC) systems can significantly reduce the potential for chemical, biological, and radiological agents being distributed throughout buildings.

2-3.6 **Provide Mass Notification.** Providing a timely means to notify building occupants of threats and what should be done in response to those threats reduces the risk of mass casualties.

2-3.7 **Facilitate Future Upgrades.** Many of the provisions of these standards facilitate opportunities to upgrade building protective measures in the future if the threat environment changes.

2-4 **ASSUMPTIONS.** Several assumptions form the foundation for these standards.

2-4.1 **Baseline Threat.** The location, size, and nature of terrorist threats are unpredictable. These standards are based on a specific range of assumed threats that provides a reasonable baseline for the design of all inhabited DoD buildings. Designing to resist baseline threats will provide general protection today and will establish a foundation upon which to build additional measures where justified by higher threats or where the threat environment increases in the future. While those baseline threats are less than some of the terrorist attacks that have been directed against U.S. personnel in the past, they represent more severe threats than a significant majority of historical attacks. It would be cost prohibitive to provide protection against the worst-case scenario in every building. The terrorist threats addressed in these standards are further assumed to be directed against DoD personnel. Threats to other assets and critical infrastructure are beyond the scope of these standards, but they are addressed in the *DoD Security Engineering Manual*. The following are the terrorist tactics upon which these standards are based:

2-4.1.1 **Explosives.** The baseline explosive weights are identified in Tables B-1 and D-1 as explosive weights I, II, and III. Their means of delivery are discussed below.

2-4.1.1.1 **Vehicle Bombs.** For the purposes of these standards, the vehicle bomb is assumed to be a stationary vehicle bomb. The sizes of the explosives in the vehicle bombs associated with explosive weight I (in equivalent weight of TNT) are likely to be detected in a vehicle during a search. Therefore, explosive weight I is the basis for the standoff distances associated with the controlled perimeter. The quantity of explosives associated with explosive weight II is assumed to be able to enter the controlled perimeter undetected; therefore, explosive weight II is the basis for the standoff distances for roadways and parking. Explosive weight II was selected because it represents a tradeoff between likelihood of detection and the risk of injury or damage.

2-4.1.1.2 **Waterborne Vessel Bombs.** For the purposes of these standards, waterborne vessels will also be assumed to contain quantities of explosives associated with explosive weight I. That weight was selected because areas beyond the shoreline are assumed not to be controlled perimeters.

2-4.1.1.3 **Placed Bombs.** Hand-carried explosives placed near buildings can cause significant localized damage, potentially resulting in injuries or fatalities. It is assumed that aggressors will not attempt to place explosive devices in areas near buildings where those devices could be visually detected by building occupants casually observing the area around the building. It is also assumed that there will be sufficient

controls to preclude bombs being brought into buildings. Explosive weight II is assumed to be placed by hand either in trash containers or in the immediate vicinity of buildings. That quantity of explosives is further assumed to be built into a bomb 150 millimeters (6 inches) or greater in height.

2-4.1.1.4 **Mail Bombs.** Explosives in packages delivered through the mail can cause significant localized damage, injuries, and fatalities if they detonate inside a building. No assumption as to the size of such explosives is made in these standards. Provisions for mail bombs are limited to locations of mailrooms so that they can be more readily hardened if a specific threat of a mail bomb is identified in the future.

2-4.1.2 **Indirect Fire Weapons.** For the purpose of these standards, indirect fire weapons are assumed to be military mortars with fragmentation rounds containing explosives equivalent to explosive weight III in Tables B-1 and D-1. Protection against the effects of such rounds on an individual building is not considered practical as a minimum standard; therefore, these standards are intended to limit collateral damage to adjacent buildings from these weapons.

2-4.1.3 **Direct Fire Weapons.** For the purpose of these standards, direct fire weapons include small arms weapons and shoulder fired rockets that require a direct line of sight. Some standards in this document are predicated on a direct fire weapon threat. Provisions of those standards are based on the assumption that those weapons will be fired from vantage points outside the control of an installation or facility. Obscuration or screening that minimizes targeting opportunities is assumed to be the primary means of protecting DoD personnel from these weapons in these standards.

2-4.1.4 **Fire.** Recent incidents indicate that causing fires can be considered a terrorist tactic. Fire may be used as a direct terrorist tactic or it may be a secondary effect of some other tactic. Examples of how fire might be used as a direct tactic would include arson and driving a fuel truck or other fuel-laden vehicle into a building.

2-4.1.5 **Chemical, Biological, and Radiological Weapons.** For the purposes of these standards, these weapons are assumed to be improvised weapons containing airborne agents employed by terrorists. These standards do not assume comprehensive protection against this threat. They provide means to reduce the potential for widespread dissemination of such agents throughout a building in the event of an attack.

2-4.2 **Controlled Perimeter.** These standards assume that procedures are implemented to search for and detect explosives to limit the likelihood that a vehicle carrying quantities of explosives equivalent to explosive weight I in Tables B-1 and D-1 could penetrate a controlled perimeter undetected. It is further assumed that access control will include provisions to reject vehicles without penetrating the controlled perimeter.

2-4.3 **Levels of Protection.** The potential levels of protection are described in Tables 2-1, 2-2, and 2-3. These standards provide a **Low** level of protection for billeting and primary gathering buildings and a **Very Low** level of protection for other inhabited buildings. Greater protection is provided for primary gathering buildings and billeting

because of the higher concentration of personnel and the more attractive nature of the target. If the minimum standoff distances are provided, or if mitigating measures are provided to achieve an equivalent level of protection, and if the threats are no greater than those indicated in Tables B-1 and D-1, the risk of injuries and fatalities will be reduced. Threats higher than those envisioned in Tables B-1 and D-1 will increase the likelihood of injuries and fatalities regardless of the level of protection. Refer to the *DoD Security Engineering Manual* for detailed guidance on levels of protection and how to achieve them for a wide range of threats.

2-4.4 **Minimum Standoff Distances.** The minimum standoff distances identified in Tables B-1 and D-1 were developed to provide survivable structures for a wide range of conventionally constructed buildings and expeditionary/temporary structures. These buildings range from tents and wood framed buildings to reinforced concrete buildings. For a more detailed discussion of this issue, refer to the *DoD Security Engineering Manual*.

2-4.4.1 **Conventional Construction Standoff Distance.** The standoff distances in the "Conventional Construction Standoff Distance" column in Table B-1 are based on explosive safety considerations that have been developed based on years of experience and observation. Those standoff distances may be conservative for heavy construction such as reinforced concrete or reinforced masonry; however, they may be just adequate for lighter-weight construction.

2-4.4.2 **Effective Standoff Distance.** Because standoff distances from the "Conventional Construction Standoff Distance" column of Table B-1 may be overly conservative for some construction types, these standards allow for the adjustment of standoff distances based on the results of a structural analysis considering the applicable explosive weights in Table B-1. For new buildings, even if such an analysis suggests a standoff distance of less than those shown in the "Effective Standoff Distance" column of Table B-1, standoff distances of less than those in that column are not allowed to ensure there is a minimal standoff distance "reserved" to accommodate future upgrades that could be necessitated by emerging threats. In addition, the 10 meter (33 feet) minimum is established to ensure there is no encroachment on the unobstructed space. For existing buildings, the standoff distances in the "Effective Standoff Distance" column of Table B-1 will be provided except where doing so is not possible. In those cases, lesser standoff distances may be allowed where the required level of protection can be shown to be achieved through analysis or can be achieved through building hardening or other mitigating construction or retrofit.

2-4.4.3 **Temporary and Expeditionary Construction.** The standoff distances in Table D-1 are based on blast testing conducted against TEMPER Tents, SEA Huts, General Purpose Shelters, and Small Shelter Systems. With adequate analysis those distances may be able to be reduced without requiring mitigating measures.

2-4.5 **Exempted Building Types.** For the reasons below some building types are exempted from some or all of these standards. The minimum standards should be applied to the exempted building types where possible.

Table 2-1 Levels of Protection – New Buildings

Level of Protection	Potential Structural Damage	Potential Door and Glazing Hazards	Potential Injury
Below AT standards	Severely damaged. Frame collapse/massive destruction. Little left standing.	Doors and windows fail and result in lethal hazards	Majority of personnel suffer fatalities.
Very Low	Heavily damaged - onset of structural collapse: Major deformation of primary and secondary structural members, but progressive collapse is unlikely. Collapse of non-structural elements.	Glazing will break and is likely to be propelled into the building, resulting in serious glazing fragment injuries, but fragments will be reduced. Doors may be propelled into rooms, presenting serious hazards.	Majority of personnel suffer serious injuries. There are likely to be a limited number (10% to 25%) of fatalities.
Low	Damaged – unrepairable. Major deformation of non-structural elements and secondary structural members and minor deformation of primary structural members, but progressive collapse is unlikely.	Glazing will break, but fall within 1 meter of the wall or otherwise not present a significant fragment hazard. Doors may fail, but they will rebound out of their frames, presenting minimal hazards.	Majority of personnel suffer significant injuries. There may be a few (<10%) fatalities.
Medium	Damaged – repairable. Minor deformations of non-structural elements and secondary structural members and no permanent deformation in primary structural members.	Glazing will break, but will remain in the window frame. Doors will stay in frames, but will not be reusable.	Some minor injuries, but fatalities are unlikely.
High	Superficially damaged. No permanent deformation of primary and secondary structural members or non-structural elements.	Glazing will not break. Doors will be reusable.	Only superficial injuries are likely.

Table 2-2 Levels of Protection – Existing Buildings

Level of Protection	Potential Structural Damage	Potential Door and Glazing Hazards	Potential Injury
Below AT standards	Severely damaged. Frame collapse/massive destruction. Little left standing.	Doors and windows fail and result in lethal hazards	Majority of personnel suffer fatalities.
Very Low	Heavily damaged - onset of structural collapse: Major deformation of primary structural members, but progressive collapse is unlikely. Collapse of secondary structural members and non-structural elements.	Glazing will break and is likely to be propelled into the building, resulting in serious glazing fragment injuries, but fragments will be reduced. Doors may be propelled into rooms, presenting serious hazards.	Majority of personnel suffer serious injuries. There are likely to be a limited number (10% to 25%) of fatalities.
Low	Damaged – unrepairable. Major deformation of secondary structural members and minor deformation of primary structural members, but progressive collapse is unlikely. Collapse of non-structural elements.	Glazing will break and is likely to be propelled into the building, but should result in survivable glazing fragment injuries. Doors may fail, but they will rebound out of their frames, presenting minimal hazards.	Majority of personnel suffer significant injuries. There may be a few (<10%) fatalities.
Medium	Damaged – repairable. Minor deformations of secondary structural members and no permanent deformation in primary structural members. Major deformation of non-structural elements.	Glazing will break, but will remain in the window frame. Doors will stay in frames, but will not be reusable.	Some minor injuries, but fatalities are unlikely.
High	Superficially damaged. No permanent deformation of primary and secondary structural members or non-structural elements.	Glazing will not break. Doors will be reusable.	Only superficial injuries are likely.

Table 2-3 Levels of Protection – Expeditionary and Temporary Structures		
Level of Protection	**Potential Structural Damage**	**Potential Injury**
Below AT Standards	Severely damaged. Frame collapse/massive destruction. Little left standing.	Majority of personnel suffer fatalities.
Very Low	Heavily damaged. Major portions of the structure will collapse (over 50%). A significant percentage of secondary structural members will collapse (over 50%).	Majority of personnel suffer serious injuries. There are likely to be a limited number (10% to 25%) of fatalities.
Low	Damaged – unrepairable. Some sections of the structure may collapse or lose structural capacity (10 to 20% of structure).	Majority of personnel suffer significant injuries. There may be a few (<10%) fatalities.
Medium	Damaged – repairable. Minor to major deformations of both structural members and non-structural elements. Some secondary debris will be likely, but the structure remains intact with collapse unlikely.	Some minor injuries, but no fatalities are likely.
High	Superficially damaged. No permanent deformation of primary and secondary structural members or non-structural elements.	Only superficial injuries are likely.

2-4.5.1 **Family Housing.** The exemption of family housing with 12 units or fewer in a single building acknowledges that the density of such units is generally low, reducing the likelihood of mass casualties. It also acknowledges the fact that low-density housing has rarely been directly targeted by terrorists. A further assumption for existing family housing with 13 or more units per building is that by designating parking spaces for specific residents or residences, the risk of parking vehicle bombs in those parking areas is reduced due to increased awareness of the vehicles that are authorized to park there.

2-4.5.2 **Shoppettes, Mini Marts, Similarly Sized Commissaries and Stand-Alone Franchised Food Operations.** These facilities by the nature of their smaller size and their operation require parking in close proximity; therefore, they are exempted from the minimum standoff distances for parking and roadways. Applying other upgrades required by these standards is feasible, however, and will lessen the risk of mass casualties.

2-4.5.3 **Gas Stations and Car Care Centers.** These facilities are exempted from these standards because, by the nature of their operation, cars must be allowed to be in close proximity to them. Other measures included in these standards would be ineffective in the absence of any control on vehicles.

2-4.5.4 **Medical Transitional Structures and Spaces.** These structures and spaces may be required for limited durations to maintain mission-critical operations during construction that require close proximity or physical connection to the existing building undergoing construction. This may make compliance with some of the standoff distance provisions of these standards impractical during the limited construction duration.

2-4.5.5 **Other Transitional Structures and Spaces.** These structures and spaces are exempted from some of the standoff distance provisions of these standards because it would be impractical to apply them considering the limited less-than-1-year duration of occupancy.

2-4.5.6 **Recruiting Stations In Leased Spaces.** These facilities are exempted because their visibility and accessibility necessitate their being located in public spaces, which makes requiring them to comply with these standards impractical. In addition, the majority of these facilities do not have a sufficient population and population density to meet the inhabited building standard.

2-4.6 **Policies and Procedures.** Policies and procedures are a critical adjunct to building standards. It is assumed that there are means to control access to controlled perimeters, underground parking, and other locations where vehicle access needs to be limited. It is further assumed that unusual packages or containers or improperly parked vehicles will be recognized as potential terrorist threats and appropriate reactive measures will be implemented to reduce the potential for casualties. Finally, it is assumed that policies and procedures will be developed to support these and other related issues and that those policies and procedures will be incorporated into antiterrorism plans, training, and exercises.

2-4.7 **Design Criteria.** It is assumed that the provisions of these standards will be coordinated with all other applicable DoD building and design criteria and policies. Nothing in these standards should be interpreted to supersede the provisions of any other applicable building or design criteria. Where other criteria mandate more stringent requirements, it is assumed that the provisions of those criteria will be followed.

2-4.8 **Enhanced Fire Safety.** Historic fire scenarios and fuel loadings for various common buildings types that are the basis for requirements in building and life safety codes are likely to be much less severe than those experienced in terrorist attacks. Therefore, in the event of a terrorist attack, fire safety may be critical to the survival of building occupants and limiting the extent of building damage. Fire safety may be enhanced by designing buildings to limit the extent or severity of a fire and providing more effective egress routes. Changes to fire safety requirements, while they may be justifiable from an antiterrorism standpoint, are beyond the scope of these standards.

2-4.9 **Training.** It is assumed that key security and facility personnel will receive training in security engineering, antiterrorism, and related areas. Refer to the Security Engineering Working Group web site for available training and to DoD 2000.12-H for additional information on training issues. It is further assumed that all DoD personnel have been trained in basic antiterrorism awareness in accordance with DoDI 2000.16, that they are able to recognize potential threats, and that they know the proper courses of action should they detect a potential threat.

2-4.10 **Expeditionary and Temporary Structures.** Expeditionary and temporary structures are commonly built of either combinations of metal frames and fabric or wood frames and rigid walls. It is assumed that most expeditionary and temporary structures cannot be retrofitted or hardened sufficiently for higher threats; therefore, unless adequate planning is done to obtain the needed space to achieve appropriate standoff, DoD personnel will be highly vulnerable to terrorist attack.

2-4.11 **Leased Buildings.** DoD personnel occupying leased buildings deserve the same level of protection as those in DoD-owned buildings; therefore, they should meet the requirements of these standards wherever possible. They must meet the requirements when the DoD occupancy meets the criteria in these standards. The thresholds in those criteria reflect the significance of higher populations of DoD personnel as targets versus the inherent risk reduction associated with dispersing DoD personnel.

APPENDIX A

DEFINITIONS

Access control. For the purposes of these standards, any combination of barriers, gates, electronic security equipment, and/or guards that can deny entry to unauthorized personnel or vehicles.

Access road. Any roadway such as a maintenance, delivery, service, emergency, or other special limited use road that is necessary for the operation of a building or structure.

Billeting. Any building or portion of a building in which 11 or more unaccompanied DoD personnel are routinely housed, including Temporary Lodging Facilities and military family housing permanently converted to unaccompanied housing. Billeting also applies to expeditionary and temporary structures with similar population densities and functions.

Building hardening. Enhanced conventional construction that mitigates threat hazards where standoff distance is limited. Building hardening may also be considered to include the prohibition of certain building materials and construction techniques.

Building separation. The distance between closest points on the exterior walls of adjacent buildings or structures.

Collateral damage. Injury to personnel or damage to buildings that are not the primary target of an attack.

Container structures. Structures built using shipping containers that are designed to withstand structural loadings associated with shipping, including Container Express (CONEX) and International Organization for Standardization (ISO) containers. Testing has shown that these structures behave similarly to buildings for the purposes of these standards.

Controlled perimeter. For the purposes of these standards, a physical boundary at which vehicle access is controlled at the perimeter of an installation, an area within an installation, or another area with restricted access. A physical boundary will be considered as a sufficient means to channel vehicles to the access control points. At a minimum, access control at a controlled perimeter requires the demonstrated capability to search for and detect explosives. Where the controlled perimeter includes a shoreline and there is no defined perimeter beyond the shoreline, the boundary will be at the mean high water mark.

Conventional construction. Building construction that is not specifically designed to resist weapons or explosives effects. Conventional construction is designed only to resist common loadings and environmental effects such as wind, seismic, and snow loads.

Conventional Construction Standoff Distance. The standoff distance at which conventional construction may be used for buildings without a specific analysis of blast effects, except as otherwise required in these standards.

Design Basis Threat. The threat (aggressors, tactics, and associated weapons, tools, or explosives) against which assets within a building must be protected and upon which the security engineering design of the building is based.

DoD building. Any building or portion of a building (permanent, temporary, or expeditionary) owned, leased, privatized, or otherwise occupied, managed, or controlled by or for DoD. DoD buildings are categorized within these standards as uninhabited, inhabited, primary gathering and billeting.

DoD Components. The Office of the Secretary of Defense (OSD); the Military Departments (including their National Guard and Reserve Components); the Chairman, Joint Chiefs of Staff and Joint Staff; the Combatant Commands; the Office of the Inspector General of the Department of Defense; the Defense Agencies; the DoD Field Activities; and all other organizational entities within DoD**.**

DoD personnel. Any U.S. military, DoD civilian, or family member thereof, host-nation employees working for DoD, or contractors occupying DoD buildings.

Effective Standoff Distance. A standoff distance less than the Conventional Construction Standoff Distance at which the required level of protection can be shown to be achieved through analysis or can be achieved through building hardening or other mitigating construction or retrofit.

Expeditionary structures. Those structures intended to be inhabited for no more than 1 year after they are erected. This group of structures typically include tents, Small and Medium Shelter Systems, Expandable Shelter Containers (ESC), ISO and CONEX containers, and General Purpose (GP) Medium tents and GP Large tents, etc.

Fabric covered/metal frame construction. A construction type that can be identified by a metal, load-bearing frame (usually aluminum) with some type of fabric (such as canvas) stretched or pulled over the frame. Examples of the types of structures that should be considered under this classification of structures include Frame-Supported Tensioned Fabric Structures (FSTFS); Tent, Extendable, Modular, Personnel (TEMPER Tents); and Small and Medium Shelter Systems (SSS and MSS); and air supported fabric structures. Testing has shown that for these fabric structures, the frame is what causes hazards.

Family housing. DoD buildings used as quarters for DoD personnel and their dependents. For the purposes of these standards, family housing will be considered to include Morale, Welfare, and Recreation housing (cottages) of similar occupancies.

Glazing. The part of a window or door assembly that normally transmits light, but not air.

Inhabited building. Buildings or portions of buildings routinely occupied by 11 or more DoD personnel and with a population density of greater than one person per 40 gross square meters (430 gross square feet). This density generally excludes industrial, maintenance, and storage facilities, except for more densely populated portions of those buildings such as administrative areas. The inhabited building designation also applies to expeditionary and temporary structures with similar population densities. In a building that meets the criterion of having 11 or more personnel, with portions that do not have sufficient population densities to qualify as inhabited buildings, those portions that have sufficient population densities will be considered inhabited buildings while the remainder of the building may be considered uninhabited, subject to provisions of these standards. An example would be a hangar with an administrative area within it. The administrative area would be treated as an inhabited building while the remainder of the hangar could be treated as uninhabited. (Note: This definition differs significantly from the definition for inhabited building used by DoD 6055.9-STD and is not construed to be authorization to deviate from criteria of DoD 6055.9-STD.)

Laminated glass. Multiple sheets of glass bonded together by a bonding interlayer.

Level of protection. The degree to which an asset (person, equipment, object, etc.) is protected against injury or damage from an attack.

Mass notification. Capability to provide real-time information to all building occupants or personnel in the immediate vicinity of a building during emergency situations.

Medical transitional structures and spaces. Structures that are erected or leased for temporary occupancy to maintain mission-critical medical care during construction, renovation, modification, repair or restoration of an existing medical structure. Examples include urgent, ambulatory, and acute care operations.

Parking. Designated areas where vehicles may be left unattended.

Primary gathering building. Inhabited buildings routinely occupied by 50 or more DoD personnel and family housing with 13 or more family units per building. This designation applies to the entire portion of a building that meets the population density requirements for an inhabited building. For example, an inhabited portion of the building that has an area within it with 50 or more personnel is a primary gathering building for the entire inhabited portion of the building. The primary gathering building designation also applies to expeditionary and temporary structures with similar population densities.

Progressive collapse. A chain reaction failure of building members to an extent disproportionate to the original localized damage. Such damage may result in upper floors of a building collapsing onto lower floors.

Roadways. Any surface intended for motorized vehicle traffic.

Routinely occupied. For the purposes of these standards, an established or predictable pattern of activity within a building that terrorists could recognize and exploit.

Security engineering. The process of identifying practical, risk managed short and long-term solutions to reduce and/or mitigate dynamic manmade hazards by integrating multiple factors, including construction, equipment, manpower, and procedures.

Specific threat. Known or postulated aggressor activity focused on targeting a particular asset.

Standoff distance. A distance maintained between a building or portion thereof and the potential location for an explosive detonation.

Structure group. A cluster of expeditionary or temporary structures consisting of multiple rows of individual structures with 200 or fewer DoD personnel.

Structural glazed window systems. Window systems in which glazing is bonded to both sides of the window frame using an adhesive such as a high-strength, high-performance silicone sealant.

Superstructure. The supporting elements of a building above the foundation.

Temporary structures. Those structures that are erected with an expected occupancy of 3 years or less. This group of structures typically includes wood frame and rigid wall construction, and such things as Southeast Asia (SEA) Huts, hardback tents, ISO and CONEX containers, pre-engineered buildings, trailers, stress tensioned shelters, Expandable Shelter Containers (ESC), and Aircraft Hangars (ACH).

TNT equivalent weight. The weight of TNT (trinitrotoluene) that has an equivalent energetic output to that of a different weight of another explosive compound.

Transitional structures and spaces. Structures or spaces within buildings that are used to temporarily (less than 1 year) relocate occupants of another building while that building undergoes renovations, modifications, repairs, or restorations.

Unobstructed space. Space within 10 meters (33 feet) of an inhabited building that does not allow for concealment from observation of explosive devices 150 mm (6 inches) or greater in height.

APPENDIX B

DoD MINIMUM ANTITERRORISM STANDARDS FOR NEW AND EXISTING BUILDINGS

B-1 **SITE PLANNING.** Operational, logistic, and security requirements must be integrated into the overall design of buildings, equipment, landscaping, parking, roads, and other features. The most cost-effective solution for mitigating explosive effects on buildings is to keep explosives as far as possible from them. Standoff distance must be coupled with appropriate building hardening to provide the necessary level of protection to DoD personnel. The following standards detail minimum standoff distances that when achieved will allow for buildings to be built with minimal additional construction costs. Where these standoff distances cannot be achieved because land is unavailable, these standards allow for building hardening to mitigate the blast effects. Costs and requirements for building hardening are addressed in the *DoD Security Engineering Manual*.

B-1.1 **Standard 1. Minimum Standoff Distances.** The minimum standoff distances apply to all new and existing (when triggered) DoD buildings covered by these standards. The minimum standoff distances are presented in Table B-1 and illustrated in Figures B-1 and B-2. Where the standoff distances in the "Conventional Construction Standoff Distance" column of Table B-1 can be met, conventional construction may be used for the buildings without a specific analysis of blast effects, except as otherwise required in these standards. Where those distances are not available, an engineer experienced in blast-resistant design should analyze the building and apply building hardening as necessary to mitigate the effects of the explosives indicated in Table B-1 at the achievable standoff distance to the appropriate level of protection. The appropriate levels of protection for each building category are shown in Table B-1, and are described in Tables 2-1 and 2-2 and in the *DoD Security Engineering Manual*. For new buildings, standoff distances of less than those shown in the "Effective Standoff Distance" column in Table B-1 are not allowed. For existing buildings, the standoff distances in the "Effective Standoff Distance" column of Table B-1 will be provided except where doing so is not possible. In those cases, lesser standoff distances may be allowed where the required level of protection can be shown to be achieved through analysis or can be achieved through building hardening or other mitigating construction or retrofit.

B-1.1.1 **Controlled Perimeter.** Measure the standoff distance from the controlled perimeter to the closest point on the building exterior or inhabited portion of the building.

B-1.1.2 **Parking and Roadways.** Standoff distances for parking and roadways are based on the assumption that there is a controlled perimeter at which larger vehicle bombs will be detected and kept from entering the controlled perimeter. Where there is a controlled perimeter, the standoff distances and explosive weight associated with parking and roadways in Table B-1 apply. If there is no controlled perimeter, assume that the larger explosive weights upon which the controlled perimeter standoff distances are based (explosive weight I from Table B-1) can access parking and roadways near

Table B-1 Minimum Standoff Distances and Separation for New and Existing Buildings

Location	Building Category	Standoff Distance or Separation Requirements			
		Applicable Level of Protection	Conventional Construction Standoff Distance	Effective Standoff Distance(1)	Applicable Explosive Weight (2)
Controlled Perimeter or Parking and Roadways without a Controlled Perimeter	Billeting	Low	45 m (4) (148 ft.)	25 m (4) (82 ft.)	**I**
	Primary Gathering Building	Low	45 m (4) (5) (148 ft.)	25 m (4) (5) (82 ft.)	**I**
	Inhabited Building	Very Low	25 m (4) (82 ft.)	10 m (4) (33 ft.)	**I**
Parking and Roadways within a Controlled Perimeter	Billeting	Low	25 m (4) (82 ft.)	10 m (4) (33 ft.)	**II**
	Primary Gathering Building	Low	25 m (4) (5) (82 ft.)	10 m (4) (5) (33 ft.)	**II**
	Inhabited Building	Very Low	10 m (4) (33 ft.)	10 m (4) (33 ft.)	**II**
Trash Containers	Billeting	Low	25 m (82 ft.)	10 m (33 ft.)	**II**
	Primary Gathering Building	Low	25 m (82 ft.)	10 m (33 ft.)	**II**
	Inhabited Building	Very Low	10 m (33 ft.)	10 m (33 ft.)	**II**
Building Separation (for new buildings only)	Billeting	Low	10 m (33 ft.)	No antiterrorism minimum	**III** (3)
	Primary Gathering Building	Low	10 m (33 ft.)	No antiterrorism minimum	**III** (3)
	Inhabited Building	Very Low	No antiterrorism minimum	No antiterrorism minimum	Not applicable

(1) Even with analysis, standoff distances less than those in this column are not allowed for new buildings, but are allowed for existing buildings if constructed/retrofitted to provide the required level of protection at the reduced standoff distance.
(2) See UFC 4-010-10, for the specific explosive weights (kg/pounds of TNT) associated with designations – I, II, III. UFC 4-010-10 is For Official Use Only (FOUO)
(3) Explosive for building separation is an indirect fire (mortar) round.
(4) For existing buildings, see paragraph B-1.1.2.2.
(5) For existing family housing, see paragraph B-1.1.2.2.3.

Figure B-1 Standoff Distances and Building Separation – Controlled Perimeter

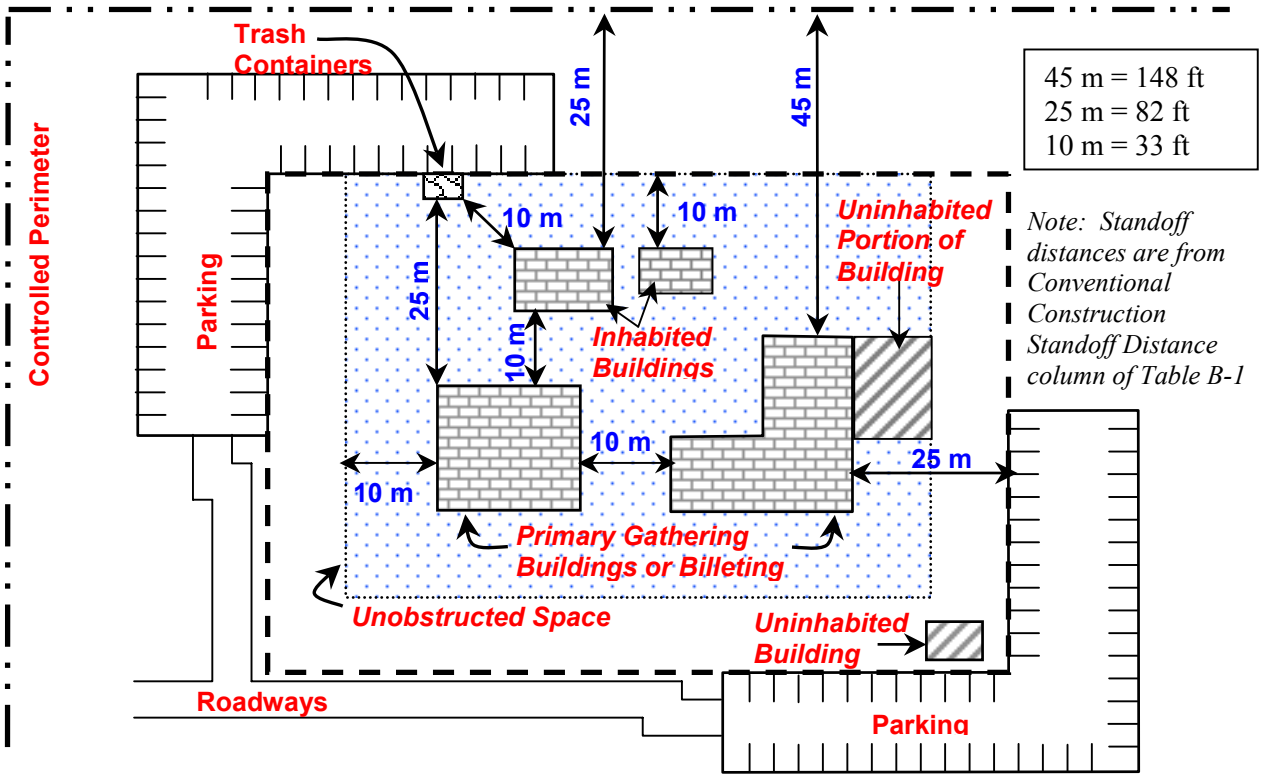

Figure B-2 Standoff Distances and Building Separation – No Controlled Perimeter

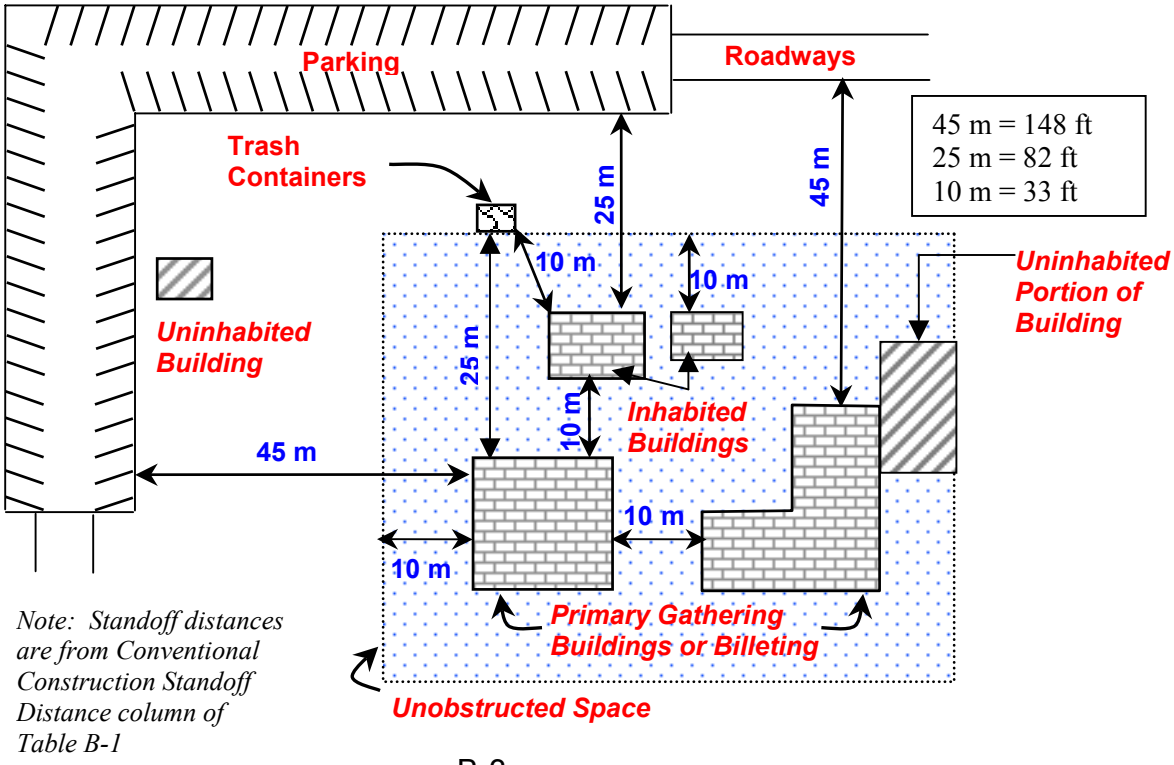

buildings. Therefore, where there is no controlled perimeter, use standoff distances from parking and roadways according to the distances and the explosive weight associated with controlled perimeters in Table B-1. Measure the standoff distance from the closest edge of parking areas and roadways to the closest point on the building exterior or inhabited portion of the building. In addition, the following apply:

B-1.1.2.1 **New Inhabited Buildings.** The minimum standoff for all new buildings regardless of hardening or analysis is 10 meters (33 feet) for both parking areas and roadways.

B-1.1.2.2 **Existing Inhabited Buildings.** Where possible, move parking and roadways away from existing buildings in accordance with the standoff distances and explosive weights in Table B-1. It is recognized, however, that moving existing parking areas and roadways or applying structural retrofits may be impractical; therefore, the following operational options are provided for existing inhabited buildings:

B-1.1.2.2.1 **Parking Areas.** Establish access control to portions of parking areas that are closer than the required standoff distance to ensure unauthorized vehicles are not allowed closer than the required standoff distance. For primary gathering buildings and billeting, if access control is provided to prevent unauthorized parking within the required standoff distance, controlled parking may be permitted as close as 10 meters (33 feet) without hardening or analysis. Controlled parking may be allowed closer if it can be shown by analysis that the required level of protection can be provided at the lesser standoff distance or if it can be provided through building hardening or other mitigating construction or retrofit.

B-1.1.2.2.2 **Parking on Roadways.** Eliminate parking on roadways within the required standoff distances along roads adjacent to existing buildings covered by these standards.

B-1.1.2.2.3 **Parking for Family Housing.** For existing family housing with 13 or more units per building within a controlled perimeter or where there is access control to the parking area, parking within the required standoff distances may be allowed where designated parking spaces are assigned for specific residents or residences. Do not label assigned parking spaces with names or ranks of the residents. Do not encroach upon existing standoff distances where the existing standoff distances are less than the required standoff distances. For example, where the required standoff distance is 10 meters, but existing designated parking is only 8 meters (27 feet) from existing family housing, that parking may be retained, but additional parking will not be allowed closer than 8 meters (27 feet.)

B-1.1.3 **Parking and Roadway Projects.** Where practical, all roadway and parking area projects should comply with the standoff distances from inhabited buildings in Table B-1. Where parking or roadways that are within the standoff distances in Table B-1 from existing buildings are being constructed, expanded, or relocated, do not allow those parking areas and roadways to encroach on the existing standoff distances of any existing inhabited building. That applies even where such projects are not associated with a building renovation, modification, repair, or restoration requiring compliance with these standards.

B-1.1.4 **Trash Containers.** Measure the standoff distance from the nearest point of the trash container or trash container enclosure to the closest point on the building exterior or inhabited portion of the building. Where the standoff distance is not available, harden trash enclosures to mitigate the direct blast effects and secondary fragment effects of the explosive on the building if the applicable level of protection can be proven by analysis. If trash enclosures are secured to preclude introduction of objects into the enclosures by unauthorized personnel, they may be located closer to the building as long as they do not violate the unobstructed space provisions of Standard 3. Openings in screening materials and gaps between the ground and screens or walls making up an enclosure must not be greater than 150 mm (6 inches).

B-1.2 **Standard 2. Building Separation.** Building separation requirements apply to new buildings and are established to minimize the possibility that an attack on one building causes injuries or fatalities in adjacent buildings. The separation distance is predicated on the potential use of indirect fire weapons.

B-1.2.1 **Billeting and Primary Gathering Buildings.** For all new billeting and primary gathering buildings, ensure that adjacent inhabited buildings are separated by at least the distances in Table B-1. Where it is necessary to encroach on those building separations, analyze the structure and provide hardened building components as necessary to mitigate the effects of the explosive indicated in Table B-1 to the appropriate level of protection shown in Table B-1. Levels of protection are described in Table 2-1 and in the *DoD Security Engineering Manual*.

B-1.2.2 **Other Inhabited Buildings.** There are no minimum separation distances required for antiterrorism purposes for inhabited buildings other than billeting and primary gathering buildings.

B-1.3 **Standard 3. Unobstructed Space.** It is assumed that aggressors will not attempt to place explosive devices in areas near buildings where these explosive devices could be visually detected by building occupants observing the area around the building. Therefore, ensure that obstructions within 10 meters (33 feet) of inhabited buildings or portions thereof do not allow for concealment from observation of explosive devices 150 mm (6 inches) or greater in height. This does not preclude the placement of site furnishings or plantings around buildings. It only requires conditions such that any explosive devices placed in that space would be observable by building occupants. For existing buildings where the standoff distances for parking and roadways have been established at less than 10 meters (33 feet) in accordance with paragraph B-1.1.2.2, the unobstructed space may be reduced to be equivalent to that distance.

B-1.3.1 **Electrical and Mechanical Equipment.** The preferred location of electrical and mechanical equipment such as transformers, air-cooled condensers, and packaged chillers is outside the unobstructed space or on the roof. However this standard does not preclude placement within the unobstructed space as long the equipment provides no opportunity for concealment of explosive devices.

B-1.3.2 **Equipment Enclosures.** If walls or other screening devices with more than two sides are placed around electrical or mechanical equipment within the unobstructed space, enclose the equipment on all four sides and the top. Openings in

screening materials and gaps between the ground and screens or walls making up an enclosure will not be greater than 150 mm (6 inches). Secure any surfaces of the enclosures that can be opened so that unauthorized personnel cannot gain access through them.

B-1.4 **Standard 4. Drive-Up/Drop-Off Areas.** Some facilities require access to areas within the required standoff distance for dropping off or picking up people or loading or unloading packages and other objects. Examples that may require drive-up/drop-off include, but are not limited to, medical facilities, exchanges and commissaries, child care centers, and schools.

B-1.4.1 **Marking.** Where operational or safety considerations require drive-up or drop-off areas or drive-through lanes near buildings, ensure those areas or lanes are clearly defined and marked and that their intended use is clear to prevent parking of vehicles in those areas.

B-1.4.2 **Unattended Vehicles.** Do not allow unattended vehicles in drive-up or drop-off areas or drive-through lanes.

B-1.4.3 **Location.** Do not allow drive-through lanes or drive-up/drop-off to be located under any inhabited portion of a building.

B-1.5 **Standard 5. Access Roads.** Where access roads are necessary for the operation of a building (including those required for fire department access), ensure that access control measures are implemented to prohibit unauthorized vehicles from using access roads within the applicable standoff distances in Table B-1.

B-1.6 **Standard 6. Parking Beneath Buildings or on Rooftops.** Eliminate parking beneath inhabited buildings or on rooftops of inhabited buildings. Where very limited real estate makes such parking unavoidable, the following measures must be incorporated into the design for new buildings or mitigating measures must be incorporated into existing buildings to achieve an equivalent level of protection.

B-1.6.1 **Access Control.** Ensure that access control measures are implemented to prohibit unauthorized personnel and vehicles from entering parking areas.

B-1.6.2 **Structural Elements.** Ensure that the floors beneath or roofs above inhabited areas and all other adjacent supporting structural elements will not fail from the detonation in the parking area of an explosive equivalent to explosive weight II in Table B-1.

B-1.6.3 **Progressive Collapse.** All structural elements within and adjacent to the parking area will be subject to all progressive collapse provisions of Standard 7 except that the exterior member removal provision will also apply to interior vertical or horizontal load carrying elements. Apply those provisions based on an explosive equivalent to explosive weight II in Table B-1.

B-2 **STRUCTURAL DESIGN.** If the minimum standoff distances are achieved, conventional construction should minimize the risk of mass casualties from a terrorist

attack. Even if those standoff distances can be achieved, however, incorporate the following additional structural issues that must be incorporated into building designs to ensure that buildings do not experience progressive collapse.

B-2.1 **Standard 7. Progressive Collapse Avoidance.** Progressive collapse is considered to be significant risk for buildings of three or more stories. Basements will be considered stories if they have one or more exposed walls. For all new and existing inhabited buildings of three stories or more, design the superstructure to sustain local damage with the structural system as a whole remaining stable and not being damaged to an extent disproportionate to the original local damage. Achieve this through an arrangement of the structural elements that provides stability to the entire structural system by transferring loads from any locally damaged region to adjacent regions capable of resisting those loads without collapse. Accomplish this by providing sufficient continuity, redundancy, or energy dissipating capacity (ductility, damping, hardness, etc.), or a combination thereof, in the members and connections of the structure. For further guidance, refer to American Society of Civil Engineers Standard 7-98 and to detailed guidance in the *DoD Security Engineering Manual*. In addition, the measures below apply to all buildings of three or more stories.

B-2.1.1 **Columns and Walls.** Design all exterior vertical load-carrying columns and walls to sustain a loss of lateral support at any of the floor levels by adding one story height to the nominal unsupported length. While this standard is based on the assumption of an external threat, where parking beneath buildings is unavoidable, this provision also applies to internal vertical load carrying columns and walls.

B-2.1.2 **Exterior Member Removal.** Analyze the structure to ensure it can withstand removal of one primary exterior vertical or horizontal load-carrying element (i.e., a column or a beam) without progressive collapse.

B-2.1.3 **Floors.** Design all floors with improved capacity to withstand load reversals due to explosive effects by designing them to withstand a net uplift equal to the dead load plus one-half the live load.

B-2.2 **Standard 8. Structural Isolation.**

B-2.2.1 **Building Additions.** Design all additions to existing buildings to be structurally independent from the adjacent existing building. This will minimize the possibility that collapse of one part of the building will affect the stability of the remainder of the building. Alternatively, verify through analysis that collapse of either the addition or the existing building will not result in collapse of the remainder of the building.

B-2.2.2 **Portions of Buildings.** Where there are areas of buildings that do not meet the criteria for inhabited buildings, design the superstructures of those areas to be structurally independent from the inhabited area. This will minimize the possibility that collapse of the uninhabited areas of the building will affect the stability of the superstructure of the inhabited portion of the building. Alternatively, verify through analysis that collapse of uninhabited portions of the building will not result in collapse of

any portion of the building covered by this standard. This standard is not mandatory for existing structures, but it should be implemented where possible

B-2.3 **Standard 9. Building Overhangs.** Avoid building overhangs with inhabited spaces above them where people could gain access to the area underneath the overhang. Where such overhangs must be used, incorporate the following measures into the design for new buildings. Incorporate mitigating measures into existing buildings to achieve an equivalent level of protection.

B-2.3.1 **Parking and Roadway Restrictions.** Ensure that there are no roadways or parking areas under overhangs.

B-2.3.2 **Floors.** Ensure that the floors beneath inhabited areas will not fail from the detonation underneath the overhang of an explosive equivalent to explosive weight II where there is a controlled perimeter and explosive weight I for an uncontrolled perimeter. Explosive weights I and II are identified in Table B-1.

B-2.3.3 **Superstructure.** The progressive collapse provisions of Standard 7, including the provision for loss of lateral support for vertical load carrying elements, will include all structural elements within and adjacent to the overhang.

B-2.4 **Standard 10. Exterior Masonry Walls.** Unreinforced masonry walls are prohibited for the exterior walls of new buildings. A minimum of 0.05 percent vertical reinforcement with a maximum spacing of 1200 mm (48 in) will be provided. For existing buildings, implement mitigating measures to provide an equivalent level of protection.

B-3 **ARCHITECTURAL DESIGN.** Even where the minimum standoff distances are achieved, many aspects of building layout and other architectural design issues must be incorporated to improve overall protection of personnel inside buildings.

B-3.1 **Standard 11. Windows and Glazed Doors.** To minimize hazards from flying glass fragments, apply the provisions for glazing and window frames below for all new and existing inhabited buildings covered by these standards. Windows and frames must work as a system to ensure that their hazard mitigation is effective. These provisions apply even if the minimum standoff distances are met.

B-3.1.1 **Glazing.** Use a minimum of 6-mm (1/4-in) nominal laminated glass for all exterior windows and glazed doors. The 6-mm (1/4-in) laminated glass consists of two nominal 3-mm (1/8-in) glass panes bonded together with a minimum of a 0.75-mm (0.030-inch) polyvinyl-butyral (PVB) interlayer. For insulated glass units, use 6 mm (1/4 inch) laminated glass inner pane as a minimum. For alternatives to the 6-mm (1/4-in) laminated glass that provide equivalent levels of protection, refer to the *DoD Security Engineering Manual*.

B-3.1.2 **Window Frames.** Provide frames and mullions of aluminum or steel. To ensure that the full strength of the PVB inner layer is engaged, design frames, mullions, and window hardware to resist a static load of 7 kilopascals (1 lb per square in) applied to the surface of the glazing. Frame and mullion deformations shall not exceed 1/160 of the unsupported member lengths. The glazing shall have a minimum frame bite of 9.5-

mm (3/8-in) for structural glazed window systems and 25-mm (1-in) for window systems that are not structurally glazed. Design frame connections to surrounding walls to resist a combined ultimate loading consisting of a tension force of 35-kN/m (200-lbs/in) and a shear force of 13-kN/m (75 lbs/in). Design supporting elements and their connections based on their ultimate capacities. In addition, because the resulting dynamic loads are likely to be dissipated through multiple mechanisms, it is not necessary to account for reactions from the supporting elements in the design of the remainder of the structure. Alternatively, use frames that provide an equivalent level of performance. For existing buildings, this may require replacement or significant modification of window frames, anchorage, and supporting elements.

B-3.1.3 **Mitigation.** Where the minimum standoff distances cannot be met, provide glazing and frames that will provide an equivalent level of protection to that provided by the glazing above as described in Tables 2-1 and 2-2 for the applicable explosive weight in Table B-1.

B-3.1.4 **Window Replacement Projects.** Whenever window or door glazing is being replaced in existing inhabited buildings as part of a planned window or glazing replacement project, whether or not the building meets the triggers in paragraph 1-6.2, install glazing that meets all of the requirements above.

B-3.2 **Standard 12. Building Entrance Layout.** The areas outside of installations are commonly not under the direct control of the installations. Where the main entrances to buildings face installation perimeters, people entering and exiting the buildings are vulnerable to being fired upon from vantage points outside the installations. To mitigate those vulnerabilities apply the following measures:

B-3.2.1 **New Buildings.** For new inhabited buildings, ensure that the main entrance to the building does not face an installation perimeter or other uncontrolled vantage points with direct lines of sight to the entrance.

B-3.2.2 **Existing Buildings.** For existing inhabited buildings where the main entrance faces an installation perimeter, either use a different entrance as the main entrance or screen that entrance to limit the ability of potential aggressors to target people entering and leaving the building.

B-3.3 **Standard 13. Exterior Doors.** For all new and existing buildings covered by these standards, ensure that all exterior doors into inhabited areas open outwards. By doing so, the doors will seat into the door frames in response to an explosive blast, increasing the likelihood that the doors will not enter the buildings as hazardous debris.

B-3.4 **Standard 14. Mailrooms.** The following measures address the location of rooms to which mail is delivered or in which mail is handled in new and existing inhabited buildings. The measures involve limiting collateral damage and injuries and facilitating future upgrades to enhance protection should they become necessary.

B-3.4.1 **Location.** Where a new or existing building covered by these standards must have a mailroom, locate that mailroom on the perimeter of the building. By locating the mailroom on the building perimeter there is an opportunity to modify it in the

future if a mail bomb threat is identified. Where mailrooms are located in the interior of buildings, few retrofit options are available for mitigating the mail bomb threat.

B-3.4.2 **Proximity.** Locate mailrooms as far from heavily populated areas of the building and critical infrastructure as possible. This measure will minimize injuries and damage if a mail bomb detonates in the mailroom. Further, it will reduce the potential for wider dissemination of hazardous agents. These apply where the mailroom is not specifically designed to resist those threats.

B-3.4.3 **Sealing.** To limit migration into buildings of airborne chemical, biological, and radiological agents introduced into mailrooms, ensure that mailrooms are well sealed between their envelopes and other portions of the buildings in which they are located. Ensure the mailroom walls are of full height construction that fully extends and is sealed to the undersides of the roofs, to the undersides of any floors above them, or to hard ceilings (i.e. gypsum wallboard ceiling.) Sealing should include visible cracks, the interface joints between walls and ceilings/roofs, and all wall and ceiling/roof penetrations. Doors will have weather stripping on all four edges. Refer to the *DoD Security Engineering Manual* for additional guidance.

B-3.5 **Standard 15. Roof Access.** For all new and existing inhabited buildings covered by these standards, control access to roofs to minimize the possibility of aggressors placing explosives or chemical, biological, or radiological agents there or otherwise threatening building occupants or critical infrastructure.

B-3.5.1 **New Buildings.** For new buildings eliminate all external roof access by providing access from internal stairways or ladders, such as in mechanical rooms.

B-3.5.2 **Existing Buildings.** For existing buildings, eliminate external access where possible or secure external ladders or stairways with locked cages or similar mechanisms.

B-3.6 **Standard 16. Overhead Mounted Architectural Features.** For all new and existing buildings covered by these standards, ensure that overhead mounted features weighing 14 kilograms (31 pounds) or more are mounted to minimize the likelihood that they will fall and injure building occupants. Mount all such systems so that they resist forces of 0.5 times the component weight in any direction and 1.5 times the component weight in the downward direction. This standard does not preclude the need to design architectural feature mountings for forces required by other criteria such as seismic standards.

B-4 **ELECTRICAL AND MECHANICAL DESIGN.** Electrical and mechanical design standards address limiting damage to critical infrastructure, protecting building occupants against chemical, biological, and radiological threats, and notifying building occupants of threats or hazards.

B-4.1 **Standard 17. Air Intakes.** Air intakes to heating, ventilation, and air conditioning (HVAC) systems that are designed to move air throughout a building that are at ground level provide an opportunity for aggressors to easily place contaminants that could be drawn into the building.

B-4.1.1 **New Buildings.** For all new inhabited buildings covered by this document locate all air intakes at least 3 meters (10 feet) above the ground.

B-4.1.2 **Existing Buildings**. The above requirement is recommended, but not mandatory, for existing inhabited buildings covered by these standards.

B-4.2 **Standard 18. Mailroom Ventilation.** To ensure airborne chemical, biological, and radiological agents introduced into mailrooms do not migrate into other areas of buildings in which the mailrooms are located, provide separate, dedicated air ventilation systems for mailrooms. Refer to the *DoD Security Engineering Manual* for additional guidance.

B-4.2.1 **Other Heating and Cooling Systems.** Building heating and cooling systems such as steam, hot water, chilled water, and refrigerant may serve mailrooms as long as the airflow systems for the mailrooms and other areas of the buildings in which they are located remain separate.

B-4.2.2 **Dedicated Exhaust Systems.** Provide dedicated exhaust systems within mailrooms to maintain slight negative air pressures with respect to the remainder of the buildings in which the mailrooms are located so that the flow of air is into and contained in the mailrooms. Though the airflow into the mailrooms will not eliminate the potential spread of contamination by personnel leaving the mailroom, it will limit the migration of airborne contaminants through openings and open doorways.

B-4.2.3 **Outside Intakes and Exhausts.** Provide mailroom ventilation system outside air intakes and exhausts with low leakage isolation dampers that can be closed to isolate the mailrooms.

B-4.2.4 **Isolation Controls.** Provide separate switches or methods of control to isolate mailrooms in the event of a suspected or actual chemical, biological, or radiological release.

B-4.3 **Standard 19. Emergency Air Distribution Shutoff.** For all new and existing inhabited buildings, provide an emergency shutoff switch in the HVAC control system that can immediately shut down air distribution throughout the building except where interior pressure and airflow control would more efficiently prevent the spread of airborne contaminants and/or ensure the safety of egress pathways. Locate the switch (or switches) to be easily accessible by building occupants. Providing such a capability will allow the facility manager or building security manager to limit the distribution of airborne contaminants that may be introduced into the building.

B-4.4 **Standard 20. Utility Distribution and Installation.** Utility systems can suffer significant damage when subjected to the shock of an explosion. Some of these utilities may be critical for safely evacuating personnel from the building or their destruction could cause damage that is disproportionate to other building damage resulting from an explosion. To minimize the possibility of the above hazards, apply the following measures:

B-4.4.1 **Utility Routing.** For all new inhabited buildings, route critical or fragile utilities so that they are not on exterior walls or on walls shared with mailrooms. This requirement is recommended, but not mandatory, for existing buildings.

B-4.4.2 **Redundant Utilities.** Where redundant utilities are required in accordance with other requirements or criteria, ensure that the redundant utilities are not collocated or do not run in the same chases. This minimizes the possibility that both sets of utilities will be adversely affected by a single event.

B-4.4.3 **Emergency Backup Systems.** Where emergency backup systems are required in accordance with requirements or criteria, ensure that they are located away from the system components for which they provide backup.

B-4.5 **Standard 21. Equipment Bracing.** Mount all overhead utilities and other fixtures weighing 14 kilograms (31 pounds) or more to minimize the likelihood that they will fall and injure building occupants. Design all equipment mountings to resist forces of 0.5 times the equipment weight in any direction and 1.5 times the equipment weight in the downward direction. This standard does not preclude the need to design equipment mountings for forces required by other criteria such as seismic standards.

B-4.6 **Standard 22. Under Building Access.** To limit opportunities for aggressors placing explosives underneath buildings, ensure that access to crawl spaces, utility tunnels, and other means of under building access is controlled.

B-4.7 **Standard 23. Mass Notification.** All inhabited buildings must have a timely means to notify occupants of threats and instruct them what to do in response to those threats.

B-4.7.1 **New Buildings.** All new inhabited buildings must have a capability to provide real-time information to building occupants or personnel in the immediate vicinity of the building during emergency situations. The information relayed must be specific enough to determine the appropriate response actions. Any system, procedure, or combination thereof that provides this capability will be acceptable under this standard.

B-4.7.2 **Existing Buildings.** For existing buildings, the above requirement is mandatory for primary gathering buildings and billeting, but recommended for all inhabited buildings.

APPENDIX C

RECOMMENDED ADDITIONAL ANTITERRORISM MEASURES FOR NEW AND EXISTING BUILDINGS

C-1 **SITE PLANNING.** The following additional measures, if implemented, will significantly enhance site security with little increase in cost and should be considered for all new and existing inhabited buildings.

C-1.1 **Recommendation 1. Vehicle Access Points.** The first line of defense in limiting opportunities for aggressors to get vehicles close to DoD buildings is at vehicle access points at the controlled perimeter, in parking areas, and at drive-up/drop-offs points. Keep the number of access points to the minimum necessary for operational or life safety purposes. This will limit the number of points at which access may have to be controlled with barriers and/or personnel in increased threat environments or if the threat increases in the future.

C-1.2 **Recommendation 2. High-Speed Vehicle Approaches.** The energy of a moving vehicle increases with the square of its velocity; therefore, minimizing a vehicle's speed allows vehicle barriers to be lighter and less expensive should vehicle barriers ever become necessary. To facilitate reductions in vehicle speeds in the future, ensure there are no unobstructed vehicle approaches perpendicular to inhabited buildings at the required parking and roadway standoff distances.

C-1.3 **Recommendation 3. Vantage Points.** Vantage points are natural or man-made positions from which potential aggressors can observe and target people or other assets in and around a building. Identify vantage points outside the control of personnel in the targeted building and either eliminate them or provide means to avoid exposure to them. Means to avoid exposure may include actions such as reorienting the building or shielding people or assets in and around the building using such measures as reflective glazing, walls, privacy fencing, or vegetation.

C-1.4 **Recommendation 4. Drive-Up/Drop Off.** Locate these points away from large glazed areas of the building to minimize the potential for hazardous flying glass fragments in the event of an explosion. For example, locate the lane at an outside corner of the building or otherwise away from the main entrance. Coordinate the drive-up/drop-off point with the building geometry to minimize the possibility that explosive blast forces could be increased due to being trapped or otherwise concentrated. For further discussion of this issue, refer to the *DoD Security Engineering Manual*.

C-1.5 **Recommendation 5. Building Location.** Activities with large visitor populations provide opportunities for potential aggressors to get near buildings with minimal controls, and therefore, limit opportunities for early detection. Maximize separation distance between inhabited buildings and areas with large visitor populations.

C-1.6 **Recommendation 6. Railroad Location.** Avoid sites for inhabited buildings that are close to railroads. Where railroads are in the vicinity of existing buildings, provide standoff distances between the railroad and any inhabited buildings

based on the standoff distances and explosive weight associated with controlled perimeters in Table B-1. Where those standoff distances are not available, and since moving existing railroads may be difficult and prohibitively expensive, ensure that there are procedures in place to prohibit trains from stopping in the vicinity of inhabited structures.

C-1.7 **Recommendation 7. Access Control for Family Housing.** For new family housing areas, provide space for controlling access at the perimeter of the housing area so that a controlled perimeter can be established there if the need arises in the future.

C-1.8 **Recommendation 8. Standoff for Family Housing.** For new family housing construction, maintain a minimum standoff distance of 25 meters (82 feet) from installation perimeters and roads, streets, or highways external to housing areas.

C-1.9 **Recommendation 9. Minimize Secondary Debris.** To reduce the hazard of flying debris in the event of an explosion, eliminate unrevetted barriers and site furnishings in the vicinity of inhabited structures that are accessible to vehicle traffic. Revet exposed barriers and site furnishings near inhabited buildings with a minimum of 1 meter (3 feet) of soil or equivalent alternative techniques to prevent fragmentation hazards in the event of an explosion.

C-2 **STRUCTURAL AND ARCHITECTURAL DESIGN.** The following additional measures, if implemented, will significantly enhance building occupants' safety and security with little increase in cost. Consider these measures for all new and existing inhabited buildings.

C-2.1 **Recommendation 10. Structural Redundancy.** Unexpected terrorist acts can result in local collapse of building structural components. To limit the extent of collapse of adjacent components, utilize highly redundant structural systems such as moment resisting frames, detail connections to provide continuity across joints equal to the full structural capacity of connected members, and detail members to accommodate large displacements without complete loss of strength. This recommendation is consistent with paragraph B-2.1 (Standard 7) for preventing progressive collapse, but recommends selection of certain structural systems and greater attention to structural details.

C-2.2 **Recommendation 11. Internal Circulation.** Design circulation within buildings to provide visual detection and monitoring of unauthorized personnel approaching controlled areas or occupied spaces.

C-2.3 **Recommendation 12. Visitor Control.** Controlling visitor access maximizes the possibility of detecting potential threatening activities. Keep locations in buildings where visitor access is controlled away from sensitive or critical areas, areas where high-risk or mission-critical personnel are located, or other areas with large population densities of DoD personnel.

C-2.4 **Recommendation 13. Asset Location.** To minimize exposure to direct blast effects and potential impacts from hazardous glass fragments and other potential

debris, locate critical assets and mission-critical or high-risk personnel away from the building exterior.

C-2.5 **Recommendation 14. Room Layout.** In rooms adjacent to the exterior of the building, position personnel and critical equipment to minimize exposure to direct blast effects and potential impacts from hazardous glass fragments and other potential debris.

C-2.6 **Recommendation 15. External Hallways.** Since doors can become hazardous debris during explosive blast events, doors designed to resist blast effects are expensive, and external hallways have large numbers of doors leading into inhabited areas, avoid exterior hallway configurations for inhabited structures.

C-2.7 **Recommendation 16. Windows.** To minimize the potential for glazing hazards, minimize the size and number of windows for new construction.

APPENDIX D

DOD MINIMUM ANTITERRORISM STANDARDS FOR EXPEDITIONARY AND TEMPORARY STRUCTURES

D-1 **SITE PLANNING STANDARDS.** All the standards that are unique to expeditionary and temporary structures pertain to site planning. Integrate operational, logistic, and security requirements into the overall configuration of structures, equipment, landscaping, parking, roads, and other features. The most cost-effective solution for mitigating explosive effects on expeditionary and temporary structures is to keep explosives as far away as possible. This is especially critical for these types of structures because hardening may or may not be possible. Dispersed layouts reduce risks from a variety of threats by taking full advantage of terrain and site conditions; therefore, nothing in these standards is intended to discourage dispersal. Costs and requirements for expeditionary and temporary structure hardening are addressed in the *DoD Security Engineering Manual*.

D-1.1 **Standard 1. Minimum Standoff Distances.** The minimum standoff distances apply to all new and existing DoD expeditionary and temporary structures covered by these standards except as otherwise stated below. The minimum standoff distances are presented in Table D-1and illustrated in Figure D-1. Except as otherwise required in these standards, where the standoff distances in Table D-1 can be provided, use conventional expeditionary and temporary structures without a specific analysis of blast effects. Where those distances are not available, analysis of the structure by an engineer experienced in blast-resistant design is required and hardening will be applied as necessary (in those cases which permit structure hardening) to mitigate the effects of the explosives indicated in Table D-1 at the achievable standoff distance to the appropriate level of protection. The appropriate levels of protection for each structure category are shown in Table D-1, and are described in Table 2-3 and in the *DoD Security Engineering Manual*. The two structure types in Table D-1 respond in fundamentally different ways to explosive effects. Standoff distances in Table D-1 reflect those differences.

D-1.1.1 **Controlled Perimeter.** Measure the standoff distance from the closest point on the structure exterior to the controlled perimeter.

D-1.1.1.1 **Container Structures and Pre-engineered Buildings.** For these structures, apply the guidance in Appendix B.

D-1.1.1.2 **Fabric Covered/Metal Frame Construction and other Expeditionary or Temporary Structures.** Provide the standoff distance from Table D-1 for the applicable structure category.

D-1.1.2 **Parking and Roadways.** Standoff distances for parking and roadways are based on the assumption that there is a controlled perimeter at which larger vehicle bombs will be detected and kept from entering the controlled perimeter. Where there is a controlled perimeter, the standoff distances and explosive weight associated with

parking and roadways in Table D-1 apply unless otherwise stated below. If there is no controlled perimeter, assume that the larger explosive weights upon which the controlled perimeter standoff distances are based (explosive weight I from Table D-1) can access parking and roadways near buildings. Therefore, where there is no controlled perimeter, use standoff distances from parking and roadways according to the distances and the explosive weight associated with controlled perimeters in Table D-1.

D-1.1.2.1 **Container Structures and Pre-engineered Buildings.** For these structures, apply the guidance in Appendix B.

D-1.1.2.2 **Fabric Covered/Metal Frame Construction and other Expeditionary or Temporary Structures.** Measure the standoff distance from the closest point on the structure exterior to the closest edge of parking areas and roadways. The minimum standoff for all structures regardless of hardening or analysis is 10 meters (33 feet).

D-1.1.2.3 **Existing Fabric Covered/Metal Frame Construction and other Expeditionary or Temporary Structures.** Moving existing parking areas and roadways may be difficult to achieve and structural retrofits to existing structures may be prohibitively expensive or technically impossible; therefore, the following operational options are provided for existing inhabited structures where the standoff distances in Table D-1 are impractical to achieve.

D-1.1.2.3.1 **Parking Areas.** Establish access control to portions of parking areas to ensure unauthorized vehicles are not allowed closer than the required standoff distance. For primary gathering structures and billeting, if access control is provided to prevent unauthorized parking within the required standoff distance, permit controlled parking as close as 10 meters (33 feet) without hardening or analysis.

D-1.1.2.3.2 **Roadways.** Eliminate parking within the required standoff distances along roads adjacent to existing structures covered by these standards.

D-1.1.3 **Trash Containers.** Measure the standoff distance from the nearest point of the trash container or trash container enclosure to the closest point on the structure exterior. Where the standoff distance is not available, hardening of trash enclosures to mitigate the direct blast effects and secondary fragment effects of the explosive on the structure is acceptable, if the applicable level of protection can be proven by analysis. If trash enclosures are secured to preclude introduction of objects into the enclosures by unauthorized personnel, locate them closer to the structure as long as they do not violate the unobstructed space provisions of Standard 3 below. Openings in screening materials and gaps between the ground and screens or walls making up an enclosure will not be greater than 150 mm (6 inches).

D-1.1.3.1 **Container Structures and Pre-engineered Buildings.** For these structures, apply the guidance in Appendix B.

D-1.1.3.2 **Fabric Covered/Metal Frame Construction and other Expeditionary or Temporary Structures.** Provide the standoff distance from Table D-1 for the applicable structure category.

D-1.2 **Standard 2. Structure Separation.** Structure separation requirements are established to minimize the possibility that an attack on one structure causes injuries or fatalities in adjacent structures. The separation distance is predicated on the potential use of indirect fire weapons.

D-1.2.1 **Billeting and Primary Gathering Structures.**

D-1.2.1.1 **Container Structures and Pre-engineered Buildings.** For these structures, apply the guidance in Appendix B.

D-1.2.1.2 **Fabric Covered/Metal Frame Construction and other Expeditionary or Temporary Structures.** For all new billeting and primary gathering structures, ensure that adjacent structures are separated by at least the distances in Table D-1. Where it is necessary to encroach on those structure separations, analyze the structure and provide hardened structure components as necessary to mitigate the effects of the explosive indicated in Table D-1 to the appropriate level of protection as shown in Table D-1. Levels of protection are described in Table 2-3 and in the *DoD Security Engineering Manual*.

D-1.2.2 **Other Inhabited Structures.** There are no minimum separation distances required for antiterrorism for inhabited buildings other than billeting and primary gathering structures.

D-1.3 **Standard 3. Unobstructed Space.** Keep areas within 10 meters (33 feet) of all expeditionary and temporary structures free of items other than those that are part of the utilities and other supporting infrastructure.

D-2 **ADDITIONAL STANDARDS.** In addition to the specific standards detailed in this appendix, apply the standards from Appendix B to expeditionary and temporary structures as follows:

D-2.1 **Fabric Covered/Metal Frame Construction and other Expeditionary or Temporary Structures.** Apply the following standards from Appendix B to these structures:

D-2.1.1 **Standard 4. Drive-Up/Drop Off Areas.**

D-2.1.2 **Standard 5. Access Roads.**

D-2.1.3 **Standard 11. Windows and Glazed Doors.**

D-2.1.4 **Standard 12. Building Entrance Layout.**

D-2.1.5 **Standard 20. Equipment Bracing.**

D-2.1.6 **Standard 22. Mass Notification.**

D-2.2 **Container Structures and Pre-engineered Buildings.** For these structures, all standards in Appendix B apply.

D-3 **ANTITERRORISM RECOMMENDATIONS.** Apply all recommendations except for Recommendation 7 (Access control for family housing) and Recommendation 8 (Standoff for family housing) from Appendix C to all expeditionary and temporary structures.

Table D-1 Minimum Standoff Distances and Separation for Expeditionary and Temporary Structures

Location	Structure Category	Standoff Distance or Separation Requirements			
		Applicable Level of Protection	Fabric Covered/Metal Frame Structures(1)	Other Expeditionary and Temporary Structures(1)(2)	Applicable Explosive Weight (TNT) (3)
Controlled Perimeter or Parking and Roadways without a Controlled Perimeter	Billeting	Low	31 m (102 ft.)	71 m (233 ft.)	**I**
	Primary Gathering Structure	Low	31 m (102 ft.)	71 m (233 ft.)	**I**
	Inhabited Structure	Very Low	24 m (79 ft.)	47 m (154 ft.)	**I**
Parking and Roadways within a Controlled Perimeter	Billeting	Low	14 m (46 ft.)	32 m (105 ft.)	**II**
	Primary Gathering Structure	Low	14 m (46 ft.)	32 m (105 ft.)	**II**
	Inhabited Structure	Very Low	10 m (33 ft.)	23 m (75 ft.)	**II**
Trash Containers	Billeting	Low	14 m (46 ft.)	32 m (105 ft.)	**II**
	Primary Gathering Structure	Low	14 m (46 ft.)	32 m (105 ft.)	**II**
	Inhabited Structure	Very Low	10 m (33 ft.)	23 m (75 ft.)	**II**
Structure Separation(4)	Separation between Structure Groups	Low	18 m (59 ft.)	18 m (59 ft.)	**III**(5)
	Separation between Structure Rows	Low	9 m (30 ft.)	9 m (30 ft.)	**III** (5)
	Separation between Structures in a Row	Very Low	3.5 m (12 ft.)	3.5 m (12 ft.)	**III**(5)

(1) See Definitions for a complete description of these structure types.
(2) For container structures, Appendix B applies.
(3) See UFC 4-010-10, for the specific explosive weights (kg/pounds of TNT) associated with designations – I, II, III. UFC 4-010-10 is For Official Use Only (FOUO)
(4) Applies to Billeting and Primary Gathering Structures only. No minimum separation distances for other inhabited structures.
(5) Explosive for building separation is an indirect fire (mortar) round.

Figure D-1 Standoff Distances and Separation for Expeditionary and Temporary Structures

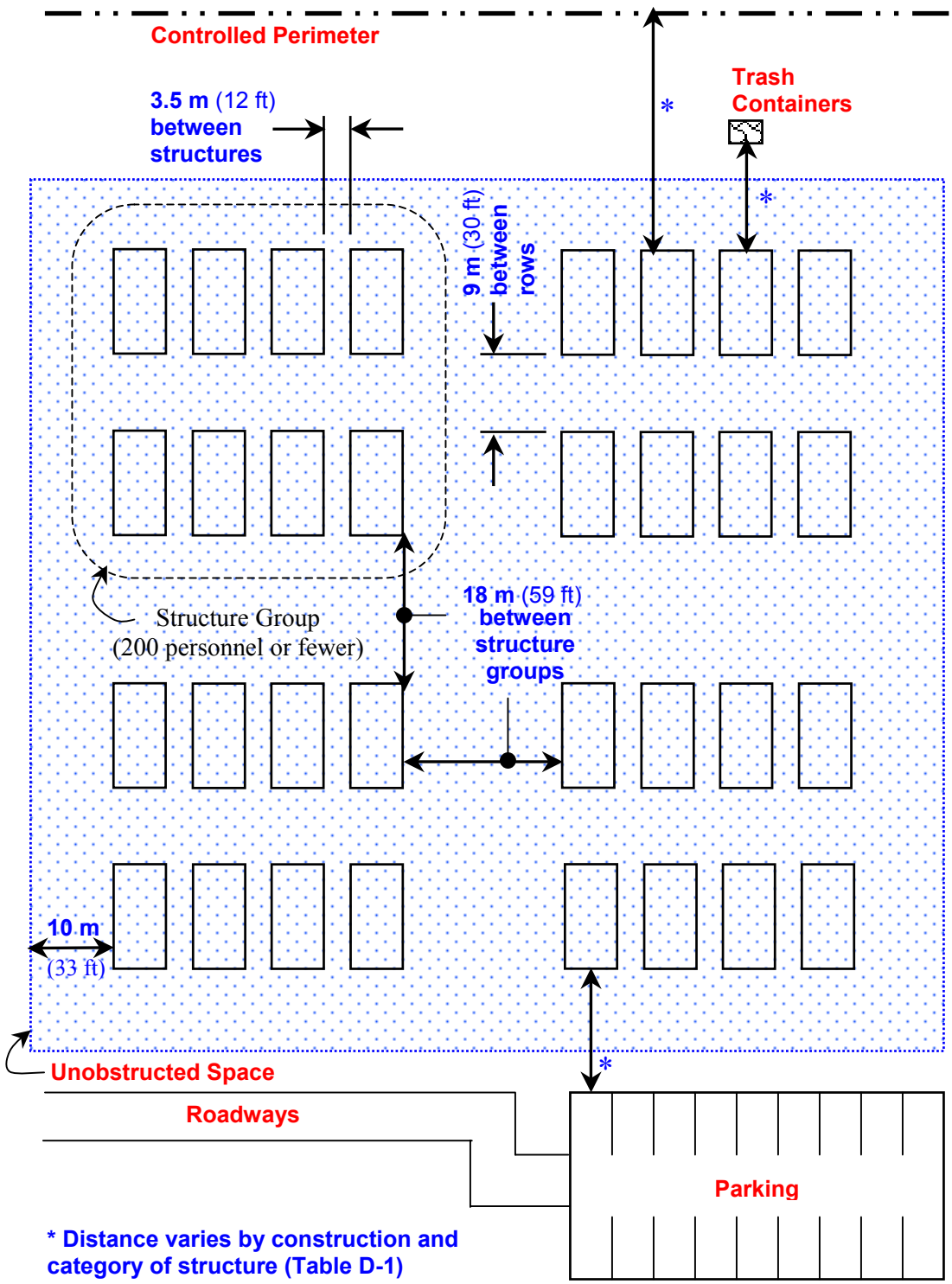

APPENDIX K

DESIGN: NAVY AND MARINE CORPS INTRANET (NMCI) STANDARD CONSTRUCTION PRACTICES (DRAFT)

DRAFT UFC 3-580-10
JWP – 24 September 2002

UNIFIED FACILITIES CRITERIA (UFC)

DRAFT
DESIGN: NAVY AND MARINE CORPS INTRANET (NMCI) STANDARD CONSTRUCTION PRACTICES

APPROVED FOR PUBLIC RELEASE; DISTRIBUTION UNLIMITED

UNIFIED FACILITIES CRITERIA (UFC)

DRAFT DESIGN: NAVY AND MARINE CORPS INTRANET (NMCI) STANDARD CONSTRUCTION PRACTICES

Any copyrighted material included in this UFC is identified at its point of use. Use of the copyrighted material apart from this UFC must have the permission of the copyright holder.

U.S. ARMY CORPS OF ENGINEERS

NAVAL FACILITIES ENGINEERING COMMAND (Preparing Activity)

AIR FORCE CIVIL ENGINEER SUPPORT AGENCY

Record of Changes (changes are indicated by \1\ ... /1/)

Change No.	Date	Location

FOREWORD

The Unified Facilities Criteria (UFC) system is prescribed by MIL-STD 3007 and provides planning, design, construction, sustainment, restoration, and modernization criteria, and applies to the Military Departments, the Defense Agencies, and the DoD Field Activities in accordance with USD(AT&L) Memorandum dated 29 May 2002. UFC will be used for all DoD projects and work for other customers where appropriate.

UFC are living documents and will be periodically reviewed, updated, and made available to users as part of the Services' responsibility for providing technical criteria for military construction. Headquarters, U.S. Army Corps of Engineers (HQUSACE), Naval Facilities Engineering Command (NAVFAC), and Air Force Civil Engineer Support Agency (AFCESA) are responsible for administration of the UFC system. Defense agencies should contact the preparing service for document interpretation and improvements. Technical content of UFC is the responsibility of the cognizant DoD working group. Recommended changes with supporting rationale should be sent to the respective service proponent office by the following electronic form: Criteria Change Request (CCR). The form is also accessible from the Internet sites listed below.

UFC are effective upon issuance and are distributed only in electronic media from the following sources:

- Unified Facilities Criteria (UFC) Index http://65.204.17.188//report/doc_ufc.html.
- USACE TECHINFO Internet site http://www.hnd.usace.army.mil/techinfo/index.htm.
- NAVFAC Engineering Innovation and Criteria Office Internet site http://criteria.navfac.navy.mil.
- Construction Criteria Base (CCB) system maintained by the National Institute of Building Sciences at Internet site http://www.nibs.org/ccb.

Hard copies of UFC printed from electronic media should be checked against the current electronic version prior to use to ensure that they are current.

AUTHORIZED BY:

Dwight A. Beranek, P.E.
Chief, Engineering and Construction Division
U.S. Army Corps of Engineers

Dr. James W Wright, P.E.
Chief Engineer
Naval Facilities Engineering Command

Kathleen I. Ferguson, P.E.
Deputy Civil Engineer
DCS/Installations & Logistics
Department of the Air Force

Frank Lane
Director of Analysis & Investment
Deputy Under Secretary of Defense
for Installations and Environment
Department of Defense

CONTENTS

Page

CHAPTER 1 INTRODUCTION

Paragraph 1-1 PURPOSE 1
1-2 SCOPE 1
1-3 ORDER OF PRESENTATION 1
1-4 APPLICATION 2
1-5 REFERENCES 2
1-6 GLOSSARY 2

CHAPTER 2 GENERAL CONDITIONS

2-1 GENERAL 3
2-1.1 Overview 3
2-2 CORE LAYER 3
2-2.1 Definition 3
2-2.2 Entrance Facility (EF) 5
2-2.3 Typical Equipment 5
2-2.4 Typical Equipment Requirements 5
2-2.5 Location 6
2-2.6 Size 6
2-2.7 Structural 7
2-2.8 Electrical 7
2-2.9 Equipment Grounding 7
2-2.10 Mechanical 7
2-2.11 Fire Protection 7
2-3 DISTRIBUTION LAYER 8
2-4 ACCESS LAYER 8
2-4.1 Telecommunications Rooms (TR) 8
2-4.2 Location 9
2-4.3 Size of TR's 9
2-4.4 Size of NMCI Equipment within TR's 10
2-4.5 Structural 11
2-4.6 Electrical 11
2-4.7 Equipment Grounding 11
2-4.8 Mechanical 11
2-4.9 Fire Protection 11
2-5 OUTSIDE CABLE PLANT 11
2-5.1 Pathways 11
2-5.2 Cabling 12
2-6 INSIDE CABLE PLANT 12
2-6.1 Pathways 12
2-6.2 Cable 13
2-6.3 Jacks and Cover Plates 13
2-6.4 Interference Considerations 14
2-6.5 Penetrations 15

CHAPTER 3 NMCI CONVERSION PROCESS

3-1 NMCI CONVERSION PROCESS 16
3-2 OVERVIEW 16
3-2.1 Coordination 16
3-2.2 Planned Construction 16
3-2.3 Material Support 16
3-2.4 Navy Facilities Engineering Commands 17
3-2.5 ROICC 17
3-2.6 Public Works 18
3-3 PHASE 1 – PREPARATION 18
3-3.1 BAN / LAN Implementation Team 19
3-3.2 Preliminary Site Questionnaire 19
3-3.3 Site In-Brief 19
3-3.4 Initial Facilities Briefing 20
3-4 PHASE 2 – JOINT ASSESSMENT / SURVEY 20
3-4.1 High Level Design 21
3-4.2 PRECON meeting 1 21
3-5 PHASE 3 – DETAILED SURVEY AND DESIGN 22
3-5.1 Team 22
3-5.2 Detailed Survey 22
3-5.3 Detailed Design 22
3-5.4 PRECON Meeting 2 23
3-6 PHASE 4 – IMPLEMENTATION 23
3-7 PHASE 5 – COMPLETION 23
3-7.1 NMCI Assumption of Responsibility 23
3-7.2 NMCI Cutover 23
3-7.3 Documentation 24

CHAPTER 4 SPECIAL CONSIDERATIONS DURING THE CONVERSION PROCESS

4-1 BUILDING POWER 25
4-1.1 Service Provision 25
4-1.2 Building Distribution 25
4-2 MECHANICAL 25
4-2.1 Existing HVAC 25
4-2.2 Cooling Guidelines 25
4-3 OUTISDE CABLE PLANT 26
4-3.1 Assumption of Fiber 26
4-3.2 Fiber Routing 26
4-4 INSIDE CABLE PLANT 27
4-4.1 Existing Building 27
4-4.2 Wall Jacks and Cable 27
4-4.3 New Construction 28
4-5 FLOOR SPACE 29
4-5.1 POP Equipment 29
4-5.2 Access and Distribution Equipment 29
4-5.3 Secure Areas 30
4-6 FIRE PROTECTION 30

APPENDIX A REFERENCES 31

APPENDIX B GLOSSARY 33

APPENDIX C 38

APPENDIX D ELECTRICAL REQUIREMENTS 44

FIGURES

Figure	Title	
2-1	NMCI Network Architecture (Simplified)	4
2-2	Wall-Mounted Cabinet	10
2-3	Typical 2V+2D Wall Plate Configuration	14
4-1	Typical (1V+1D) Configuration	28
B-1	Single Line Drawing of EIA/TIA Facility/Function Terminology	37
C-1	Scope of EIA/TIA Standard 607 for Large Commercial Buildings	41
C-2	Grounding Recommendations for EIA-607 non-Compliant Building	43
D-1	Typical One-Line Diagram for Facility POPS	51
D-2	Typical One-Line Diagram for Facility MC's/IC's	52

TABLES

Table	Title	
2-1	NMCI POP Facilities	7
2-2	NMCI MC Cabinet Requirements	8
2-3	TR Size Requirements	10
2-4	NMCI TR Cabinet Requirements	11
4-1	Cooling Guidelines	26
C-1	Minimum Uniformly Distributed Live Loads and Minimum Concentrated Live Loads	39
C-2	NCM Minimum Loads	39
D-1	Point of Presence (POP)	45
D-2	Main Cross Connect	49
D-3	Intermediate Cross Connect	50

CHAPTER 1

INTRODUCTION

1-1 **PURPOSE .** This UFC will be used by the Navy and Marine Corps. The Army and the Air Force do not have or require comparable criteria at this time.

This UFC provides general guidance and planning information for DoN construction and repair projects that will require Navy/Marine Corps Intranet (NMCI) presence. It also provides information on the planning processes and general practices utilized by the current NMCI Contractor, the Information Strike Force (ISF) during initial conversion to NMCI services. All Engineering Field Divisions, Engineering Field Activities, Public Works Commands (PWC), Public Works Detachments (PWD), Resident Officer in Charge of Construction (ROICC) offices, and other concerned parties in the process, should refer to this UFC when designing, planning and/or preparing documentation for new construction or renovation projects that will require operational NMCI support.

1-2 **SCOPE.** This document cites and supplements existing Government and Commercial standards and specifications governing architectural, mechanical, and electrical requirements for design of NMCI required Entrance Facilities (EF) and Telecommunication Rooms (TR) with their respective Main Cross Connect (MC), and Intermediate Cross Connect (IC) equipment. In order to accommodate the rapid advances in equipment and installation practices, the industry standards should form the basis of the designs for telecommunications facilities. These include ANSI / TIA / EIA 569-A, *Commercial Building Standard for Telecommunications Pathways and Spaces*, ANSI / TIA / EIA 568-B.1, *Commercial Building Telecommunications Cabling Standard*, and NFPA 70, *National Electric Code*. The NAVFAC *Interim Technical Guidance (ITG) for Telecommunications Cabling Systems* and MIL-HDBK-1012/3 *Telecommunications Premises Distribution Planning, Design, and Estimating* are to be used to provide specific Navy guidance on the methodologies to be followed during design of the facilities, however the designs must incorporate the latest applicable technological requirements in the current industry standards cited.

This document is not to be used for design or planning of Server Farm Facilities. For Server Farm Facilities refer to the NMCI ISF Facilities Standards "Draft" located under NMCI Information on the EFDSOUTHWESTDIV website (http://www.efdsw.navfac.navy.mil/05/05I/NMCI.htm NMCI Operations Manual/ISF Facilities Standard. Appropriate NMCI subject matter experts are available from the NMCI Contractor to assist Department of the Navy (DoN) designers and planners upon request. Contact the base NMCI representative for the point of contact in the BAN/LAN design team.

1-3 **ORDER OF PRESENTATION.** This document presents a summary of the requirements to prepare DoN space for a future NMCI installation in the first two chapters. The remaining chapters provide information on how an existing base, or building, is converted to NMCI. The NMCI seat represents the end state and as there is more than one way to get there, this document cannot present a cook book methodology for conversion. DoN and the NMCI Contractor are committed to meeting the deployment objectives at least cost to both parties.

1-4 **APPLICATION.** This UFC covers DoN owned and leased (commercial and Inter Agency Agreements) facilities regardless of location.

1-5 **REFERENCES.** Appendix A contains a complete list of references used in this manual. The publication date of the code or standard is not included in this document. In general, the latest available issuance of the reference has been used.

1-6 **GLOSSARY.** Acronyms, abbreviations and other uncommon terms are found in Appendix B. As a point of common usage, the acronym NMCI refers to the network and ISF refers to the current NMCI Contractor or people who provide the network.

CHAPTER 2

GENERAL CONDITIONS

2-1 **GENERAL.** Quantity, size and location of NMCI infrastructure facilities are influenced by many factors. Required capabilities, quality of service, technical limitations, standards and codes are a few of the factors that impact the design and configuration of the required infrastructure.

2-1.1 **Overview.** The NMCI unclassified design on any given base is a hierarchical, three layered architecture as indicated in Figure 2-1. The layers include:

- Core – connection to the outside world
- Distribution – building connection to base "outside plant"
- Access – drops to the individual seats

Connections between layers are fiber optic (Gigabit Ethernet). The connections between the access layer and the individual seats are Category 5e (Fast Ethernet) cable to support Fast Ethernet protocol. The terms used throughout this document follow ANSI / EIA / TIA standards to the greatest extent possible. Realizing that even the industry standards have inconsistencies as they progress through the differing update cycles, the most recent version of ANSI / EIA / TIA 568 B.1 has been chosen as the basis. When the terminology differs from this standard, the specific usage and interpretation of the terminology is described within the text and in Appendix B.

2-2 **CORE LAYER.** The Equipment Room (ER) that houses the NMCI network entrance facility (EF) is associated with the NMCI core layer and is called the NMCI Point of Presence (POP).

2-2.1 **Definition.** Every base with NMCI presence will have a POP (a base with a server farm will have the EF and other functions normally included in the POP, as described below, contained within the server farm. A POP will be deployed within NMCI wherever the network is not physically controlled within a DoN environment. For example, at MCAS Miramar Interstate 15 divides East Miramar from "mainside". Communications connectivity between the two sides is primarily provided through PacBell central offices located off-site. Two NMCI POPs would be deployed to support this base: one aboard mainside, within the server farm, and the other located aboard East Miramar.

FIGURE 2-1. NMCI UNCLASSIFIED NETWORK ARCHITECTURE

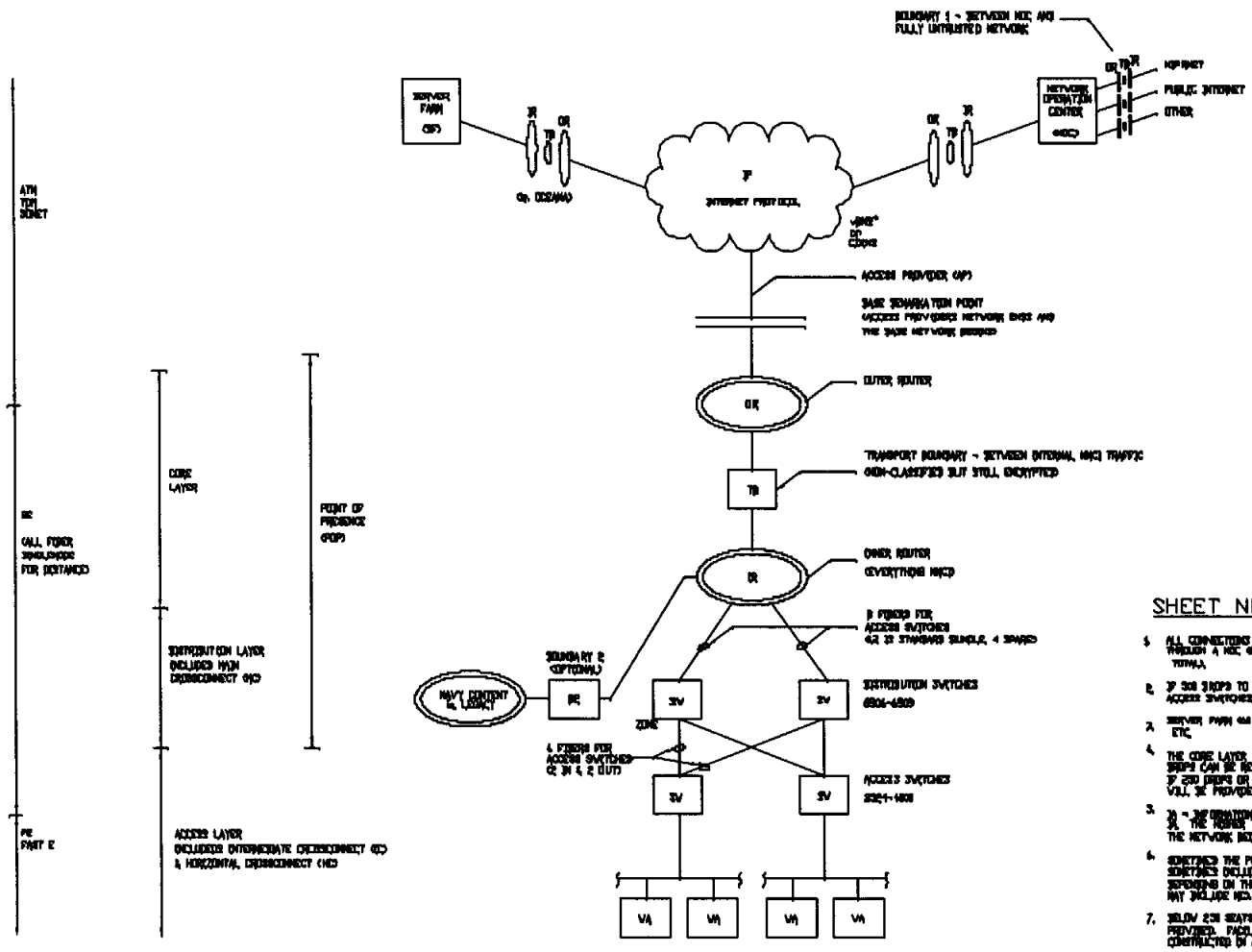

SHEET NOTES:

5. ALL CONNECTIONS THAT GO THROUGH THE INTERNET WILL GO THROUGH A NOC (CURRENTLY 3 IN THE NETWORK, MAYBE 4 TOTAL).
2. IF 300 DROPS TO WORK AREA (WA) => 30000 APPROX. 17 ACCESS SWITCHES.
3. SERVER FARM (SF) IS NETWORKED - E-MAIL, FILE SERVERS, ETC.
4. THE CORE LAYER SHOWN IS NON-REDUNDANT. BELOW 250 DROPS CAN BE REDUNDANT OR NON-REDUNDANT CONFIGURATION. IF 250 DROPS OR ABOVE THEN A REDUNDANT CORE LAYER WILL BE PROVIDED.
5. IA - INFORMATION ASSURANCE. EACH BOUNDARY IS PART OF IA. THE FARTHER THE BOUNDARY NUMBER, THE MORE TRUSTED THE NETWORK BEING CONNECTED TO NMCI.
6. SOMETIMES THE POP INCLUDES ONLY THE CORE LAYER AND SOMETIMES INCLUDES THE CORE & DISTRIBUTION LAYER (DC) DEPENDING ON THE NUMBER OF DROPS (250 DROPS AND ABOVE MAY INCLUDE DC).
7. BELOW 250 SEATS, BOUNDARY 2'S ARE GENERALLY NOT PROVIDED. FACILITIES TO ACCOMMODATE BOUNDARY 2 ARE CONSTRUCTED IN ALL POP'S 250 SEATS AND ABOVE.

2-2.2 **Entrance Facility (EF).** Entrance Facilities denote the transfer of maintenance between the public network and the network under the control of NMCI. In new buildings, the NMCI function must be included in the overall telecommunications system EF design in accordance with MIL-HDBK 1012/3. In existing facilities the NMCI EF may or may not be located in proximity to the EF and demarcation point (DP) associated with the telecommunications access provider (AP), see Figure B-1. The EF function for the NMCI network is always contained within the NMCI POP or included in the Server Farm. The EF function of the POP provides media conversion between the access provider network and the NMCI network.

2-2.3 **Typical equipment.** An NMCI POP/ER contains some or all of the following classes of equipment, depending on site requirements.

- Unclassified inner router
- Outer router
- Transport boundary (for IA)
- Communications line termination and multiplex equipment
- Network distribution routers
- Boundary 2 (for IA)
- Voice gateway equipment[1]
- Voice call management equipment[1]

The POP is not required to be a Controlled Access Area (CAA) as defined for a Protected Distribution System (PDS). There will not be any unencrypted classified traffic running through the POP. The Information Assurance (IA) for the unclassified network is provided by the Boundary 2 and Transport Boundary equipment.

2-2.4 **Typical Equipment Requirements.** All equipment will be contained in enclosed cabinets. Each cabinet will be secured to the flooring and braced in compliance with local codes. Smaller POPs will utilize an in-cabinet UPS. POPs serving a base with more than 250 seats will utilize a common UPS for protected power. It is common for the NMCI Technical Power Panel (TPP) to be installed in the equipment room. NMCI typically does not install transformers or other electrical equipment within the POP/ER that would change the room type or affect the operation of the network equipment.

[1] To be installed at sites where voice CLINs have been ordered.

Equipment for the POP room is deployed in standard packages based on the number of seats. The equipment is typically delivered in enclosed cabinets 24-inches across the front face and 952.5 mm (37.5 in) in depth. A 0.9 m (3 ft) working area is required for the front and rear doors of the cabinet. This space can be shared with work areas for nearby cabinets or electrical equipment.

2-2.5 **Location.** The ideal location of the NMCI POP is near the base Telecommunications EF/DP. Typically, POPs should be located away from sources of electromagnetic interference (transformers, motors, x-ray, induction heaters, arc welders, radio, radar) until interference is less than 3 V/m across the frequency spectrum. Generally, separate rooms with equipment located on opposing walls will satisfy this requirement.

Other locations to avoid are sources of flooding, as well as mailrooms and other hazardous areas as defined by Antiterrorism/Force Protection (AT/FP) Guidelines. See UFC 4-010-01, *DoD Minimum Antiterrorism Standards for Buildings* for additional information on AT/FP requirements.

2-2.6 **Size.** The nominal room sizes for the NMCI POP facilities are as indicated in Table 2-1.

Communications cabinets require a minimum of 609.6 mm (24 in) of clearance to the front and rear of the cabinet although 914.1 mm (36 in) is preferred. The Uniform Federal Accessibility Standards (UFAS) and Americans with Disabilities Act Accessibility Guidelines (ADAAG) requiring 914.1 mm (36 in) clearance between equipment in telecommunication rooms is excluded under Section 4.1.4, paragraph 4, "General Exceptions" in UFAS and under Section 4.1.1, paragraph 5 "General Exceptions" in the ADAAG. The National Electrical Code (NEC) requirement for 914.1 mm (36 in) of workspace for electrical junction points and pull boxes still applies.

Table 2-1 NMCI POP Facilities

Description**	Cabinets	Nominal Size *
Small Site (non-redundant) – 5 to 32 seats	1	3.7 m^2 (40 ft^2)
Small Site (redundant) – 5 to 32 seats	1	3.7 m^2 (40 ft^2)
Small Base (non-redundant) 33 to 249 seats	1	3.7 m^2 (40 ft^2)
Small Base (redundant) 33 to 249 seats	2	5.57 m^2 (60 ft^2)
Medium Base (redundant) – 250 to 700 seats	6	29.7 m^2 (320 ft^2)
Large Base (redundant); no server farm – 701 to 2000 seats	9	41.8 m^2 (450 ft^2)
Notes: * See paragraph 2-2.4 for clarifications Note**: Redundant and non-redundant refer to inner and outer router in the POP.		

2-2.7 **Structural.** Equipment Room Structural Requirements are listed in Appendix C.

2-2.8 **Electrical.** POP electrical requirements are dependent upon the size of the POP. Table D-1 in Appendix D represents the NMCI electrical requirements for each size POP. The ampacity at the service connection point identified by the government for the TPP will be based upon the demand load of the equipment. Figure D-1, Appendix D, represents a typical one line for the POP equipment.

2-2.9 **Equipment Grounding.** Equipment Grounding requirements are listed in Appendix C.

2-2.10 **Mechanical.** Mechanical requirements are listed in Appendix C.

2-2.11 **Fire Protection.** Fire Protection will be in accordance with NFPA guidelines for unoccupied telecommunications spaces. These spaces are

network distribution areas and are not considered "critical facilities" under the code.

2-3 **DISTRIBUTION LAYER.** The NMCI Distribution Layer consists of MC level switches that comprise a portion of the Base Area Network (BAN) and Local Area Network (LAN). MC equipment requires permanent, dedicated space in EF's. These would include both the NMCI EF (the POP) as well as the EF for individual buildings as shown on Figure B-1. Guidelines for EF construction have been defined within the Core Layer information.

The space requirements for the NMCI MC facilities are as indicated in Table 2-2.

Table 2-2 NMCI MC Cabinet Requirements

Description	Cabinets	Nominal Size *
MC	1 or 2	3.72 to 5.57 m^2 (40 to 60 ft^2)
Notes: * See paragraph 2-2.4 for clarifications.		

2-4 **ACCESS LAYER.** The NMCI Access Layer consists of the IC level switches that comprise a portion of the Base Area Network (BAN) and Local Area Network (LAN). IC equipment requires permanent, dedicated space. In Figure B-1 this equipment is located in an EF or ER. In normal NMCI configurations the IC equipment is typically located in a Telecommunications Room (TR). In smaller buildings, the functions of the EF and TR may be combined into a single room. Switches or routers and associated patch panels are included in cabinets.

2-4.1 **Telecommunication Rooms (TR).** Telecommunications rooms should be dedicated to telecommunications function and should not house unrelated electrical equipment. There must be at least one TR per floor. If the area served is over 929 m^2 (10,000 ft^2), or the total cable distance to the work area (WA) is over 89.9 m (295 ft), there must be additional TR's on the floor. All distances must be calculated in accordance with EIA / TIA 568-B.1.

Commonly, the NMCI TPP is installed in the TR. NMCI typically does not install transformers or other electrical equipment that would change the room type or effect the operation of the network equipment. Other equipment such as piping, ductwork or pneumatic tubing must not be installed in, pass through or enter into the room. For new facilities, the NMCI TR function must be combined with the overall telecommunication system room designs in accordance with MIL-HDBK 1012/3.

2-4.2 **Location.** The ideal space for a typical TR will be near the building's EF for telecommunications infrastructure and must be within 90 m (295ft) of the seats/users to be served. This is cable distance and not physical separation on the floor. Telecommunication Rooms should be located away from sources of electromagnetic interference (transformers, motors, x-ray, induction heaters, arc welders, radio, radar) until interference is less than 3 V/m across the frequency spectrum. Generally, separate rooms with equipment located on opposite walls will satisfy this requirement. Avoid sources of flooding.

- The TR must be located as close as practicable to the center of the area being served, and preferably in the core of the building.
- In multi-floor buildings, TR's must be stacked vertically.

2-4.3 **Size of TR's.** Cabinets within TR's normally require a minimum of 609.6 mm (24 in) of clearance to the front and rear of the cabinet although 914.4 mm (36 in) is preferred. The Uniform Federal Accessibility Standards (UFAS) and Americans with Disabilities Act Accessibility Guidelines (ADAAG) requiring 914.1 mm (36 in) clearance between equipment in telecommunication rooms is excluded under Section 4.1.4, paragraph 4, "General Exceptions" in UFAS and under Section 4.1.1, paragraph 5 "General Exceptions" in the ADAAG. The NEC requirement for 914.4 mm (36 in) of workspace for electrical junction points and pull boxes still applies.

Size requirements for TRs are based on distributing telecommunications service to one individual work area per 9.29 m^2 (100 ft^2) of usable floor space. Minimum room sizes for TR's and the potential number of seats that can be addressed per the EIA / TIA guidelines are shown in Table 2-3.

Table 2-3 TR Size Requirements

Area Served	Room size[2]	Potential Seats Fed
464.5 m^2 (5000 ft^2) or less	3.05 m by 2.43 m (10 ft. by 8 ft)	50
464.5-743.2 m^2 (5000-8000 ft^2)	3.05 m by 2.74 m (10 ft. by 9 ft.)	50-80
743.2-929 m^2 (8000-10,000 ft^2)	3.05 m by 3.35 m (10 ft. by 11 ft.)	80-100

2-4.4 **Size of NMCI Equipment within TR's.** The nominal space required for NMCI IC equipment cabinets in TR's is indicated in Table 2-4. A typical IC will accommodate up to roughly 250 seats using a single cabinet. Cabinet requirements may also vary due to seat classifications and other factors.

As an example, the space allocated to a wall mounted cabinet is shown in Figure 2-2.

Figure 2-2 Wall-Mounted Cabinet

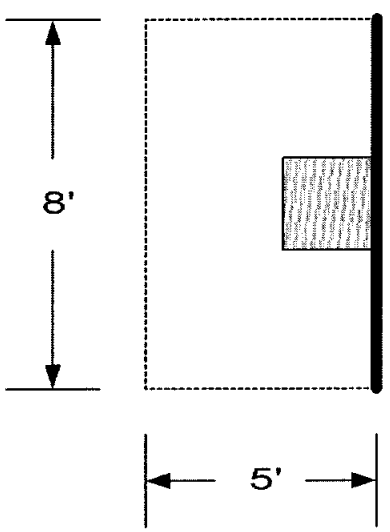

The workspace required around the cabinet is still required even if the cabinet is mounted 2m (6.5 ft) off the floor.

[2] ANSI/TIA/EIA-569-A recommends a minimum room size of 3.05 m x 0.65 m (10 ft x 7 ft.). The size 3.05 m by 0.74 m (10 ft x 8 ft) is specified here to allow a center rack configuration.

Table 2-4 NMCI TR Cabinet Requirements

Description	Cabinets	Nominal Size *
Large IC	2	5.57 m^2 (60 ft^2)
Typical IC	1	3.7 m^2 (40 ft^2)
Notes: * See paragraph 2-2.4 for clarifications.		

2-4.5 **Structural.** Structural requirements are listed in Appendix C.

2-4.6 **Electrical.** TR electrical requirements are dependent upon the number of seats supported in addition to the basic requirements listed in ANSI/TIA/EIA 569A. Tables D-2 and D-3 in Appendix D represent the NMCI electrical requirements for each TR. The ampacity at the service connection point identified by the government for the TPP will be based upon the demand load of the equipment. Figure D-2, Appendix D, represents a typical one line for the MC / IC equipment in the TR.

2-4.7 **Equipment Grounding.** Equipment Grounding requirements are listed in Appendix C.

2-4.8 **Mechanical.** Mechanical requirements are listed in Appendix C.

2-4.9 **Fire Protection.** Fire Protection will be in accordance with NFPA guidelines for unoccupied telecommunications spaces. These spaces are network distribution areas and are not considered "critical facilities" under the code. TRs are therefore not normally required to be fire rated structures.

2-5 **OUTSIDE CABLE PLANT.** For new facility construction where NMCI is not fully implemented (anticipated prior to FY-2004) at a given base, see Chapter 4. This section is therefore written describing the steady state condition that NMCI is fully implemented as described in the conversion process in Chapter 3.

2-5.1 **Pathways.** Coordinate with the NMCI Contractor to determine if the NMCI pathways can be routed in the same ductbank with other communication conduits. If so, external conduits (beyond the five-foot line) and manholes are government funded to the closest applicable manhole. Otherwise, identify the quantity and routing of NMCI pathways on contract documents as "provided by NMCI". The location of manholes and the necessary

interconnecting support structures must be explicitly described and identified in the contract documents.
For new buildings, a minimum of one 101.6-mm (4-in) conduit must be provided for NMCI service. Provide two conduits for multi-story buildings. Three innerducts (two 38.1 mm (1.5 in) and one 25.4 mm (1 in)) are to be used in each conduit and a pull string is to be placed inside each of the innerducts and the conduit. This is in addition to the conduits required for other communications services; i.e. telephone, cable television, fire alarm and intrusion detection.

2-5.1.1 **Detection**. Provide electronic detection for each pathway in accordance with the following:

- Foil tape above the duct back must be used for new installations
- Permanent tracer wire must be used when pulling new cable in existing duct systems.

2-5.2 **Cabling**. All NMCI cable will be provided by the NMCI Contractor. Standard NMCI practice utilizes Single Mode (SM) fiber optic cable, with a minimum core size of 8 microns, as the transport medium between building EFs.

- All fiber will be installed underground. Fiber may be direct buried or installed in conduit.
- If running fiber from the access layer to the distribution switches, a minimum of 12 strands of SM fiber is required.
- If classified seats are supported, conduits are required and will be encased in concrete

2-6 **INSIDE CABLE PLANT.** For new facility construction where NMCI is not fully implemented (anticipated prior to FY-2004) at a given base, see Chapter 4. This section is therefore written describing the steady state condition that NMCI is fully implemented as described in the conversion process in Chapter 3 and is summarized below:

- Cable pathways provided with Facility Contract.
- Outlet boxes provided with Facility Contract
- Backbone cabling provided by NMCI
- Horizontal cabling (data and voice) provided by NMCI
- Jacks with cover plates provided by NMCI

2-6.1 **Pathways.** Coordinate with the NMCI Contractor to ensure the proper type and location of jacks. The location of pathways and the necessary

interconnecting support structures must be explicitly described and identified in the contract documents.

2-6.1.1 **Backbone Pathways.** For new facilities include a minimum of one, dedicated 101.6 mm (4-in) conduit (or equivalent accessible pathway) from the ER to the TR and between TRs inside a building for NMCI use. These will provide path and protection for the second level backbone cable. When conduit is used, provide three Innerducts (two 38.1 mm (1.5 in) and one 25.4 mm (1 in) within the dedicated conduits. Provide a pull string inside each of the inner-ducts and the conduit.

2-6.1.2 **Horizontal Pathways**. Horizontal pathways extend between the TR and the work area. Varieties of pathway options are available. The pathway system must be included in the project design (or RFP in case of Design/Build). The facilities contract must include all identified concealed conduits, conduit drop, cable tray, J-hook construction and outlet boxes. Construction coordination with the NMCI Contractor must be a requirement of the contract. The construction contract must allow the NMCI Contractor access to the facility prior to BOD to install cable and jacks. Access must be available to all pathways for the installation of additional cabling over the life of the building.
A common pathway approach utilizes complete conduit home runs from the WA to the TR. Cable trays, when used, must be sized per ANSI/TIA/EIA 569A. Where conduit is utilized, a minimum of one 1-inch conduit per drop must be stubbed up in the ceiling. Another pathway option for unclassified services consists of cable run from the TR along cable tray and J-hooks suspended above a plenum ceiling, using the "streets and alleys" design approach, dropping through interior walls or support columns in conduit, and terminating at the wall outlet described below.

2-6.2 **Cable**

2-6.2.1 **Backbone Cable.** Backbone cable will normally be fiber. On bases with low capacity POP equipment (less than 50 seats), copper interconnect cabling may be used between the ER and TR.

2-6.2.2 **Horizontal Cable**. Home run cabling from each WA to the nearest telecommunications room will be Category 5e UTP cable. Network drops are terminated on eight-position 8-conductor Category 5e jacks, wired to the T568B configuration.

2-6.3 **Jacks and Cover Plates**. NMCI standard practice for work area (WA) outlets will be a 2 Voice + 2 Data (2V+2D) configuration contained in a single quad-4 position faceplate or wall plate. A typical wall plate configuration is shown in Figure 2-3.

Voice jacks will be home run to and terminated in the same wiring closet as the data drops by the NMCI Contractor. The voice drops and data drops will be CAT 5e UTP cable.

2-6.3.1 **Fiber to the Desktop.** If mission requirements for the work area include data rates above Category 5e (100 Base T), specific security requirements, or specific environmental constraints, then fiber optic cable to the desktop may be supported. The specific requirements must be authorized and shall be identified by individual line items in the EFD 1391. A fiber optic homerun is not supported by the standard NMCI contract seat. If fiber to the desktop is required, the NMCI monthly seat cost may therefore be significantly higher.

Figure 2-3 Typical 2V+2D Wall plate configuration

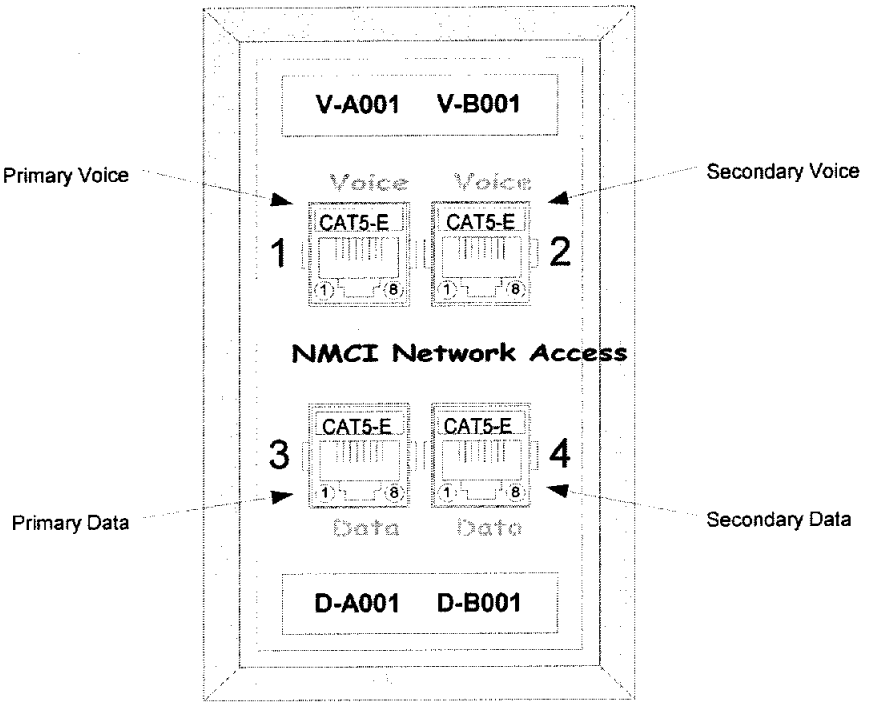

2-6.3.2 **Category 6 (CAT 6) Cabling.** Category 6 cable has recently been approved in EIA /TIA 568 B.2-1 (June 2002). Analogous to fiber optic, CAT 6 is not supported under the current NMCI contract. At this time it is not known if there will be additional costs associated with CAT 6 cable and therefore, the DoN has not yet converted to CAT 6.

2-6.4 **Interference Considerations**. Article 800-52 of the National Electrical Code states that communications wires and cables shall be separated by at least 50.8 mm (2 in) from conductors of any light, power, Class 1, non-power-limited fire alarm, or medium power network-powered broadband

communications circuits. When wires are run for any significant distance in an electromagnetic field, interference can occur between the field and the signals on the wires due to magnetic induction of the cable. Strong electromagnetic interference, especially as caused by lightning or radio transmitters, can destroy the signal drivers and receivers in the server, and can even create an electrical hazard by conducting power surges through lines and into equipment. NMCI minimum requirements for cable separation are:

- Horizontal wiring may not be run closer than 50.8 mm (2 in) in parallel with electrical wiring or lighting fixtures.
- Horizontal wiring must be placed no closer than 1.2 m (48 in) to electrical transformers
- Horizontal wiring must be placed no closer than 203.2 mm (8 in) to fluorescent lighting ballasts
- Horizontal wiring must be placed no closer than 76.2 mm (3 in) to other horizontal wiring when crossing
- Crossing of horizontal wiring should be at 90-degree angles

2-6.5 **Penetrations.** Raceways, cable trays, and cables for power, data, and communications systems penetrating non-rated and fire-rated floors, walls, and other partitions of building construction must be fire stopped. Fire stopping must be accomplished by using a combination of Underwriters Laboratories (UL) listed materials and devices, including penetrating raceway, cable tray, or cables, required to make up complete fire stop. See UFGS 07840, *Firestopping* for additional information on listed materials. Verify that cabling and other penetrating elements and supporting devices have been completely installed and temporary lines and cables have been removed.

CHAPTER 3

NMCI CONVERSION PROCESS

3-1 **NMCI Conversion Process.** This chapter contains an overview, in a template format, of the process associated with a base conversion. It is not within the scope of this UFC to provide details on the various processes. Furthermore, the ISF is continually refining its processes and a detailed representation would quickly go out of date and create confusion among the readers. There are agreed-to cutover plans between DoN and the ISF for each base. In order to meet these schedules, the ISF may elect to accelerate certain portions of the construction or modify steps in the process given herein to meet these schedules. There is no obligation expressed or implied by the ISF or the government that these processes will be rigidly observed at all times and in all cases. Ongoing communication between the ISF and the base personnel may require additional meetings and some deviations to the process framework provided herein. Additional documentation on these processes is available from the ISF.

It is also important to note that the processes briefly described in this chapter apply only to the infrastructure work. There are other simultaneous processes affecting such things as legacy applications and seat rolls. Such items are beyond the scope of this document.

3-2 **Overview.** ISF facilities are constructed to commercial "best practices." Construction is not required to conform to the standard Military Handbooks, Unified Facilities Criteria (UFC), or Unified Facilities Guide Specifications (UFGS). But the ISF is required to follow standards identified in the ADAAG/UFAS and Life, Fire, and Safety regulations.

3-2.1 **Coordination.** The NAVFACENGCOM NMCI GFF management office at SOUTHWESTDIV is the Government coordination point on the NMCI program for all facilities issues. Questions regarding Chapters 3 and 4 of this Guidance should be directed to that office at www.efdsw.navfac.navy.mil/05/05I/nmci.htm.

3-2.2 **Planned Construction.** For DoN construction projects that are being planned or under construction, the ISF and DoN will work together to identify possible pre-construction design changes to facilitate compliance with NMCI cabling/voice/data standards. The ISF site manager needs to obtain a list of new building projects being planned or under construction from the Base representative during the conversion process. The ISF representative will coordinate an ISF review in order to provide guidance on recommended design changes.

3-2.3 **Material Support.** The Government is contractually bound to provide government furnished equipment (GFE) and government furnished

facilities (GFF) to the NMCI Contractor to support the build-out of the NMCI Contractor infrastructure. Detailed information on roles and responsibilities during construction are provided in the Navy Message at the following website:http://www.efdsw.navfac.navy.mil/05/05I/pdf/281122Z_AUG01.pdf
In general terms under the agreement, the Government provides:

- Net area (clear span), requested when possible;
- Space that is free of hazards from asbestos and lead-based paint;
- Adequate floor loading capacity in accordance with Appendix C, Structural;
- Heating and ventilation, and air conditioning if available;
- Adequate electrical power;
- Building and utility drawings of record;
- Code compliance review;
- Base security;
- Security badges for contractor personnel constructing facilities and security escorts into areas where contractor personnel are not normally cleared for access.

Note: Conflicts with requirements will be negotiated on a case-by-case basis.

3-2.4 **Navy Facilities Engineering Commands.** Navy Facilities Engineering Commands (NAVFACENGCOM), through respective engineering field divisions/activities, will provide:

- Review of ISF Build-out design, focusing on fire protection, life safety and environmental
- Final Acceptance of newly installed or modified fire suppression systems
- Review of special site-specific engineering reports provided by ISF.

3-2.5 **ROICC.** NAVFACENGCOM Resident Officer in Charge of Construction (ROICC's) will provide the following support for Navy and Marine Corps Activities:

- Coordination of the government review of the ISF Build-out design including the receipt and distribution of designs between all involved parties

- Limited construction start-up coordination and assistance similar to what is provided for new construction projects, including pre-construction conferences, utility outages, dig permits, security passes, and lay-down areas

- Visits to the job site, as appropriate, to gain a perspective for jobsite safety and reasonable assurance that construction complies with the design. The ROICC has the authority to suspend work when life-threatening safety violations or practices are observed.

- Liaison and assistance with other station departments (i.e. public works, security, environmental, and fire department) as required to maintain construction progress.

- Coordination and interface with other construction contracts in vicinity of the NMCI Construction.

- Coordination with the NMCI GFF manager's office at SOUTHWESTNAVFACENGCOM

3-2.6 **Public Works.** Public Works Centers (PWC) (when site is covered by PWC area of responsibility and when funded by regional commanders or major claimants) or Public Works Departments (PWD) / Facilities Management Departments (FMD) / Public Works Offices (PWO) will provide support including:

- Utility connection and interface, design review and coordination, and support on utility outages and connections.

- Input to the SCM concerning utilities and equipment maintenance and coordination with ISF

- Other support as requested.

3-3 **PHASE 1 – PREPARATION.** The ISF team will arrive on site and begin collecting the data needed for the conversion. As a part of these preparations, the ISF sends a letter to the base Commanding Officer (CO) stating that seats have been requested on a delivery order. While the ISF begins to mobilize, the CO should instruct the Public Works Department or the ROICC to make available to the ISF Site Manager, existing drawings and diagrams detailing electrical distribution and communications cabling throughout the base. These documents should be in CADD format where available.

3-3.1 **BAN / LAN Implementation Team.** A BAN / LAN team must be established and comprised as a minimum of members of the following organizations:

3-3.1.1 **DoN**

- PWC / PWD / FMD / PWO
- NCTC (NNSOC) / Base Communications Officer (BCO)
- Space and Naval Warfare Systems Command (SPAWAR) (where applicable)
- Region / Claimant / Activity IT leads / Chief Information Officer (CIO)
- ROICC

3-3.1.2 **NMCI Contractor.** This team must establish a senior DoN team leader and the team is responsible for identifying and dedicating infrastructure components including available conduits, fiber, and copper cable. This infrastructure includes currently operating network as well as dark fiber, copper, and conduits that may be turned over to the NMCI Contractor for their use.

3-3.2 **Preliminary Site Questionnaire.** The Preliminary Site Questionnaire (PSQ) is normally used as a tool for seat conversion, however portions of it are also applicable to the infrastructure conversion. It is a necessary prerequisite for conducting the Joint Assessment/Survey (Paragraph 3-3). It is requested that the PSQ be completed by the claimant prior to the in-brief and contains information such as:

- Points of Contact
- Copies of Drawings (hard and electronic if available)
- Known Constraints
- Known Issues

3-3.3 **Site In-Brief.** Phase 1 ends with an on-site in brief. The purpose of the in brief is to explain the full NMCI conversion process. Participants in the in brief generally include:

3-3.3.1 **ISF**

3-3.3.2 **DoN**

- Command Representative
- Base Command (Infrastructure/Technology)
- Public Works
- ROICC
- Base Communications Officer (BCO)
- Major Claimants in the current delivery order

3-3.4 **Initial Facilities Briefing.** Because the formal site in brief is focused on the entire NMCI deliverable, it is not possible to focus on the infrastructure work as part of the brief. At some sites, the morning is set aside for the general briefing and "break out" sessions are held with various base parties, such as the Public Works or ROICC during the afternoon. On some bases, these meetings are on different days. The following topics are covered:

- The infrastructure conversion (design and discovery) process
- Typical documentation packages
- Guidance on reviews and the two planned pre-construction (PRECON) meetings
- The need for escorts and support during the survey and build phases
- Construction standards and best commercial practice
- Local work rules, hours
- Local zoning or code restraints
- Environmental concerns: Asbestos, Nature Reserves, Protected Areas
- Building access requirements: Secure/un-secure buildings, escort requirements, etc.
- Electrical loading
- POP location and requirements (where applicable)

3-4 **PHASE 2 -- JOINT ASSESSMENT/SURVEY.** The joint assessment or survey is a discovery process performed by ISF with representation from the Navy, to identify specific information within buildings that

are to have an NMCI presence and the infrastructure required to support those seats. This step is a more detailed physical design of the network elements, including inside plant and TR spaces, followed by review and verification. This physical design provides the basis for the first PRECON meeting. This typically includes:

- General infrastructure related measurements (i.e. building distances, etc)
- Identification of rooms and interior runs
- Identification of construction requirements
- Information Assurance high level survey

3-4.1 **High Level Design.** The high level design will be completed 5 days following the Joint Assessment/Survey. It is an internal ISF program document package. This design will include preliminary network topology, identification of closets, switches, and potential reuse of inside and outside cable plant. It can be considered the equivalent of a 30% design.

3-4.2 **PRECON Meeting 1.** A PRECON meeting will be conducted following the preparation of the ISF high-level design to achieve consensus on the design elements with cognizant ROICC and Public Works personnel. Formal construction drawings are not prepared for this meeting by the ISF. This meeting may proceed or follow the internal ISF high-level design briefings. Items to be discussed will include:

- Buildings/closets that will receive equipment
- Room selection criteria and priorities
- Outside Plant (OSP) and Inside Plant (ISP)
- Expected type of build-out
- IA requirements
- Buildings scheduled for demolition
- Hazardous materials issues
- Existing base construction plans that could impact ISF work
- Support required for detailed surveys

3-5 **PHASE 3 – DETAILED SURVEY AND DESIGN.** The third phase is a detailed survey of all facilities in the claimant's current order. This includes physically visiting each area to validate or resolve any issues that may impact installation of NMCI Infrastructure.

3-5.1 **Team.** ISF sub-contractors generally conduct the detailed survey with the bases Public Works Department. It is vital that Public Works have representation on this survey to identify and dedicate the required assets including space in the electrical panel and room availability.

3-5.2 **Detailed Survey.** Using the High Level Design, ISF will physically visit each affected portion of the facility to determine:

- Power available
- Identify power panels to be used
- Identify and measure space
- Condition of facility
- Buildings/closets that will receive equipment
- Expected type of build-out
- Electrical requirements
- HVAC requirements
- Space requirements
- Environmental concerns: Asbestos, Nature Reserves, Protected Areas
- ISP/OSP testing and measurement
- Telecommunications Room/Work Area measurements

3-5.3 **Detailed Design.** The result of the detailed survey will be a detailed design consisting of 80% to 100% construction drawings as well as detailed information on all aspects of the infrastructure build-out. The detailed design will include:

- Detailed design and construction drawings for inside and outside plant

CHAPTER 4

SPECIAL CONSIDERATIONS DURING THE CONVERSION PROCESS

4-1 BUILDING POWER

4-1.1 **Service Provision.** The government is responsible for providing required electrical service to the building to support NMCI operations within that building. As part of the detailed site survey, the Navy and ISF will survey all buildings to determine if additional electrical service is required.

4-1.2 **Building Distribution.** The feeder breaker for the POP will be sized according to equipment load in Table D-1. For an MC, the feeder breaker will be sized according to Table D-2. For an IC, the feeder breaker will be sized according to Table D-3. The feeder breaker (if existing) or adequate usable space will be provided by DoN in the panel it designates for this purpose. A dedicated technical power panel (TPP) will be provided by the ISF to feed the NMCI equipment. Interconnection conduit and cabling between the feeder panel and the ISF TPP will be provided by the ISF.

4-2 **MECHANICAL.** If NMCI equipment is added to an existing room and the heat load from the equipment exceeds the ability of existing HVAC to provide adequate cooling for that space, ISF will provide additional means for cooling that space. The power to the additional HVAC equipment will be included in the total ampacity identified by the NMCI building distribution request and should be consistent with the site cooling amps information in Appendix D.. It will be provided from the TPP by NMCI.

4-2.1 **Existing HVAC.** If a space is shared or utilizes building wide HVAC, ISF will provide controls if required to be able to adjust ventilation and temperature within the NMCI space. Independent ventilation control is desirable. Facility managers must be aware of NMCI constraints and must not inadvertently shut down the entire facility HVAC system without coordinating with NMCI.

4-2.2 **Cooling Guidelines.** Table 4-1 below describes the business rules used by the ISF in determining cooling for typical equipment during conversion. Some variation from this table can be expected.

Table 4-1 Cooling Guidelines

Description**	Air Conditioning	Forced Air	Ambient Air
POP***	Required	Optional	
Large MC Switch	Required		
Small MC Switch	Optional	Required	Optional*
Large IC Switch	Optional	Required	Optional*
Small IC Switch		Optional	Standard

Notes:

*If large open room, ambient air may be sufficient.

**Table based on normal room sizes in an office environment (typical 2.44 m by 3.05 m (8ft by 10ft)). Smaller rooms may have more stringent requirements

*** Non-redundant small base and small site POP's (under 250 seats) may not require air conditioning.

4-3 OUTSIDE CABLE PLANT

4-3.1 **Assumption of Fiber.** Existing pathways and cabling will be leveraged as the first option for the NMCI outside plant (OSP). The BAN / LAN implementation will control this process. An assessment of existing OSP pathways and cable will culminate with a written request to the customer for the transfer to the ISF, or Assumption of Responsibility (AOR) of infrastructure needed. This request will be provided as early as possible in the program, preferably at the site in brief.

4-3.2 **Fiber Routing.** NMCI practice is that all fiber will be underground. Aerial fiber is only permitted if it already exists and diverse redundant fiber is buried, or available via a different aerial path. Permission to run aerial fiber must be obtained from the cognizant activities Base Communications Office. If new trenching of pathways is required a minimum of one 101.6 mm (4 in) PVC conduit will be placed by ISF. In multi-story building locations, two 101.6 mm (4 in) conduits will be placed. Three innerducts (two 38.1 mm (1.5 in) and one 25.4 mm (1 in) will be used in each conduit and a pull string is to be placed inside each of the innerduct and the conduit.

The NMCI architecture dictates that each access switch has two links to the distribution layer. Diverse routing will be used whenever practical as defined by the operating guidelines of the ISF. In order to comply with the NMCI performance requirements, buildings with several hundred users that would be affected in an outage, may dictate diverse fiber runs. However, it may not make good business sense to add diverse fiber paths to access all buildings. Dual-fiber runs may also be placed into the same conduit to provide some level of redundancy in the switch.

4-4 INSIDE CABLE PLANT

4-4.1 **Existing Building.** Existing horizontal pathways and work area cabling will be leveraged as the first option for all NMCI inside plant (ISP). If the existing cable plant is sufficient to support the needed uplinks or interconnects, and will scale for future needs, it will be certified by ISF and reused. If the cable plant is determined to be insufficient, new cable must be pulled. Normally, existing Category 5e cable will be AOR'd if it has been certified by ISF to meet the data transmission standards for the cable. In the case where there is only fiber optic cabling between the IC and WA, the ISF will certify the cable and reuse it. See paragraph 2-6.3.1 for additional information on fiber to the desk top. Where there are both fiber optic and Category 5e cables, the ISF will utilize only the Category 5e cables, where such cables can be certified for use, and abandon the fiber optic cabling in place.

4-4.2 **Wall Jacks and Cable.** Minimum acceptable wall outlet configuration for NMCI AOR is 1 Voice and 1 Data (1V + 1D) jack in a single, 4-position faceplate. This is also the standard configuration for new DoN construction prior to AOR. The 1V+1D configuration should be installed and labeled in positions 1 and 3 on the wall outlet as shown in Figure 4-1. Positions 2 and 4 should be covered with blanks. Both voice and data ports are to be combined into a single wall outlet with one wall outlet per work area (WA).

Voice jacks must be home run back to the appropriate telephone closet in existing buildings or telecommunications room in new facilities. The voice drops and data drops must also be CAT 5e UTP cable.

Figure 4-1 Typical (1V+1D) Configuration

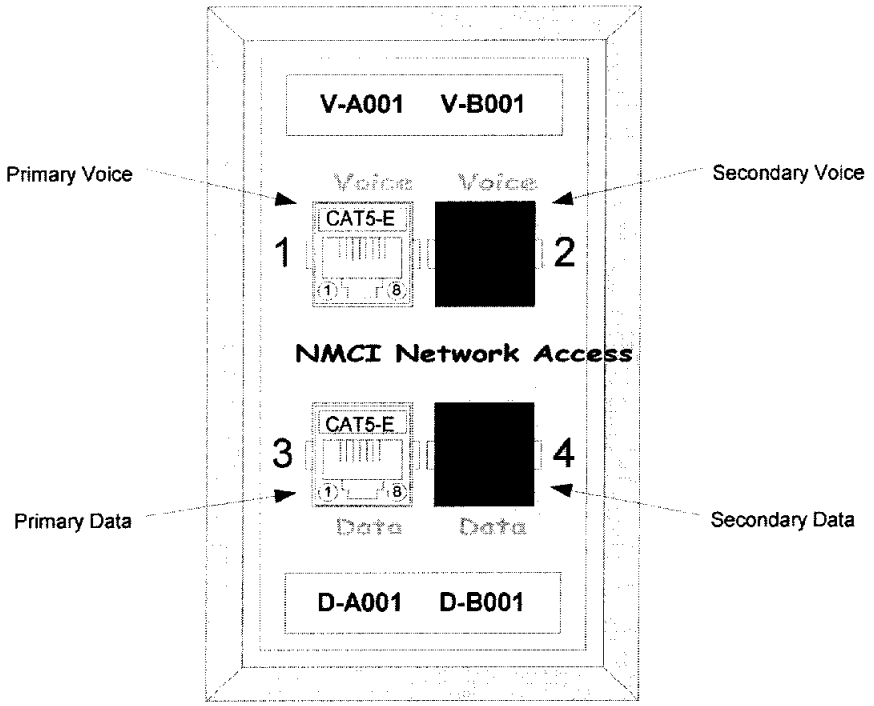

4-4.3 **New Construction.** This paragraph deals with a new facility being constructed where the ISF has begun to assume the network for that activity. Other activities on the same base may not have authorized seats at the same time. Both voice and data drops are included in horizontal cabling. The following guidance is based on the design completion date and is relevant to the tenant command.

4-4.3.1 **Prior to NMCI Seat Authorization.**

- Cable pathways provided with Facility Contract.
- Outlet boxes provided with Facility Contract
- Backbone cabling provided with Facility Contract
- Horizontal cabling (data and voice) provided with Facility Contract
- Jacks with cover plates provided with Facility Contract

4-4.3.2 **Subsequent to Seat Authorization but Prior to NMCI AOR.**

- Cable pathways provided with Facility Contract.

- Outlet boxes provided with Facility Contract
- Backbone cabling provided by NMCI
- Horizontal cabling (data and voice) provided with Facility Contract
- Jacks with cover plates provided with Facility Contract

4-4.3.3 **Subsequent to AOR but Prior to NMCI Cutover.**

- Cable pathways provided with Facility Contract.
- Outlet boxes provided with Facility Contract
- Backbone cabling provided by NMCI
- Horizontal cabling (data and voice) provided by NMCI
- Jacks with cover plates provided by NMCI

4-4.3.4 **After NMCI Cutover.**

- Cable pathways provided with Facility Contract.
- Outlet boxes provided with Facility Contract
- Backbone cabling provided by NMCI
- Horizontal cabling (data and voice) provided by NMCI
- Jacks with cover plates provided by NMCI

4-5 FLOOR SPACE

4-5.1 **POP Equipment.** The floor space required for POP equipment on conversion will be the same as the recommendations for new construction in paragraph 2-2.6.

4-5.2 **Access and Distribution Equipment.** Access and distribution layer equipment is generally located in existing closets/rooms or in open spaces without separating walls. The ISF will, as a last resort, partition a room to meet specific security or minimize cooling requirements. Floor space requirements for conversion depend on site conditions where the equipment is to be located and the equipment required. They will be generally the same as for new construction in paragraphs 2-4.3 and 2-4.4.

4-5.3 **Secure Areas.** NMCI equipment spaces may be required to meet Navy secure storage requirements if an encryption device and associated servers are installed at this location. The TR in this case would be considered a Controlled Access Area (CAA) as defined for a Protected Distribution System (PDS). Certification from SPAWAR of the design and implementation is required. ISF is responsible for providing additional security equipment and facility upgrade if converting a non-classified space to a classified space.

4-6 **FIRE PROTECTION.** Due to the function of the space, it is NMCI practice to construct the ER as a 1-hour, fire rated enclosure. A wall mounted Type 2A:C rated fire extinguisher will generally be installed outside the ER door and with signage for easy access. The 1-hour rating on the ER is due to the function of the ER, not the equipment located inside. Destruction of the ER for any reason, including fire, would impair connectivity to all seats on the base.

APPENDIX A

REFERENCES

GOVERNMENT PUBLICATIONS

1. Unified Facilities Criteria

National Institute of Building Sciences
USACE / NAVFAC / AFCESA
Construction Criteria Base
www.ccb.org

UFC 4-010-01, DoD Minimum Antiterrorism Standards for Buildings

UFGS 07840N, Firestopping

MIL-HDBK-1002/2A, Structural Loads* This handbook is referenced only for tables that will be incorporated in the

2. Naval Facilities Engineering Command (NAVFAC)

LANTNAVFACENGCOM
Engineering Innovation and Criteria Office (EICO)
1510 Gilbert Street
Norfolk, VA 23511
www.lantdiv.navfac.navy.mil

Military Handbook 1012/3

ITG FY , Telecommunications Systems

3. National Archives and Records Administration (NARA)

700 Pennsylvania Ave, N.W.
Washington, D.C. 20408
1-866-325-7208
http://www.access-board.gov/adaag/html/adaag.htm

Americans with Disabilities Act Accessibility Guidelines (ADAAG)

http://www.access-board.gov/ufas/ufas-html/ufas.htm

Uniform Federal Accessibility Standards (UFAS)

NON-GOVERNMENT PUBLICATIONS

1. ASHRAE

American Society of Heating, Refrigerating and Air-Conditioning Engineers, Inc.

ASHRAE Standard 62, Ventilation for Acceptable Indoor Air Quality

1791 Tullie Circle, N.E., Atlanta, GA
30329 USA
Phone: (404)636-8400
Fax: (404)321-5478
www.ahrae.org

2. ANSI/TIA/EIA

American National Standards Institute
Washington, DC Headquarters
1819 L Street, NW, 6th Fl.
Washington, DC, 20036
Tel: 202.293.8020
Fax:202.293.9287
www.ansi.org

ANSI / TIA / EIA 568-B.1, Commercial Building Telecommunications Cabling Standard (with Appendices 1, 2, and 3)

ANSI / TIA / EIA 569-A, Commercial Building Standard for Telecommunications Pathways and Spaces

ANSI /NECA/ BICSI 568, Standard for Installing Commercial Building Telecommunications Cabling

ANSI / TIA / EIA 606, The Administration Standard for the Telecommunications Infrastructure of Commercial Buildings

ANSI / TIA / EIA 607, Commercial Building Bond and Grounding Requirements for Telecommunications

ANSI /TIA /EIA 645, Information Technology Equipment

3. National Fire Protection Agency (NFPA)

NFPA (National Fire Protection Association),
1 Batterymarch Park Quincy, MA
02269-9101 USA
Telephone: (617) 770-3000
Fax: (617) 770-0700
www.nfpa.org

NFPA 70, National Electrical Code

APPENDIX B

GLOSSARY

AOR: Assumption of Responsibility.

Access Provider (AP): The operator of any facility that is used to convey telecommunications signals to and from a customers premise.

ADAAG: Americans with Disabilities Act Accessibility Guidelines.

Backbone: A facility (e.g. pathway, cable or conductors) between telecommunications rooms, or floor distribution terminals, the entrance facilities, and the equipment room within or between buildings.

BAN: Base Area Network.

BCO: Base Communications Officer.

Boundary 1: Suite of network security components configured to provide perimeter security at the NMCI NOCs connecting NMCI to the NIPRNET and SIPRNET.

Boundary 2: Suite of network security components configured to provide perimeter security at local sites connecting NMCI to legacy networks.

CAA: Controlled Access Area.

CIO: Chief Information Officer.

CLIN: Contract Line Item Number.

COINS: Communities of Interest Network Services.

Demarcation Point (Demarc or DP): This is the point at which the access providers network ends. Generally, this is where the access providers maintenance responsibility ends.

Distribution Frame (DF): Generic term for a common wiring interconnect point where cable routes can be changed and equipment interconnected.

Entrance Facility (EF): An entrance to a building for both public and private network cables (including wireless). It consists of the entrance point to the building and continues to the entrance room or space.

EM: Electromagnetic.

Entrance Room: A space in which the joining of inter or intra building telecommunications backbone facilities takes place.

Equipment Room (ER): An environmentally controlled centralized space for telecommunications equipment that usually houses a main or intermediate cross-connect. The function of the ER, in NMCI terminology, is included in the EF or TR.

FMD: Facilities Management Department.

GFE: Government furnished equipment.

GFF: Government furnished facilities.

Horizontal Cabling: The cabling between and including the telecommunications outlet/connector and the horizontal cross-connect.

IA: Information Assurance.

Intermediate Distribution Frame (IDF): NMCI common usage for the equipment that provides the access layer in the NMCI architecture. This guidance refers to it as the IC.

Information Strike Force (ISF): The team of commercial contractors responsible for providing (building-maintaining) the Navy/Marine Corps Intranet.

Intermediate Cross-connect (IC): A cross-connect between first level and second level backbone cabling.

ISF: Information Strike Force. This is the designation of the current NMCI Contractor team. Although not contractually accurate, this term has been used within this UFC in sections referring to the current NMCI conversion process.

Inside Plant (ISP): Wiring and cabling located inside a building.

Internet Service Provider (ISP): An ISP (Internet service provider) is a company that provides individuals and other companies access to the Internet and other related services. An ISP has the equipment and the telecommunication line access required to have a point of presence on the Internet for the geographic area served.

Internet Protocol (IP): The Internet Protocol (IP) is the method or protocol by which data is sent from one computer to another on the Internet. Each computer (known as a host) on the Internet has at least one IP Address that uniquely identifies it from all other computers on the Internet.

LAN: Local Area Network.

Main Cross-connect (MC): A cross-connect for first level backbone cables, entrance cables, and equipment cables.

Main Distribution Frame (MDF): NMCI Common usage for the equipment that provides the distribution layer in the NMCI architecture. This guidance refers to it as the MC.

Network Operations Center (NOC): Control center for the NMCI network. In addition, under NMCI specialty usage, the NOC is the point of egress from the network.

NIPRNET: Not-classified-but-sensitive Internet Protocol Router Network.

NMCI: Navy and Marine Corps Intranet.

Outside Plant (OSP): Wiring and cabling located outside and between buildings.

PDS: Protected Distribution System.

Point of Presence (POP): The equipment room (ER) on a base without a server farm where the DP exists between the access provider and NMCI. It also contains the media conversion point between the public network and the NMCI network, the transport boundary and some of the network distribution routers and switches.

PSQ: Preliminary Site Questionnaire.

PWC: Public Works Center.

PWD: Public Works Detachment.

PWO: Public Works Office.

ROICC: Resident Officer in Charge.

SIPRNET: Secret Internet Protocol Router Network.

Server Farm: A location in the NMCI topology where all the servers required for content distribution and for network services are located.

SM: NMCI common usage for Site Manager.

SPAWAR: Space and Naval Warfare Systems Command.

Telecommunications Room (TR): An enclosed space for housing telecommunications equipment, cable terminations, and cross-connect cabling, that is the recognized location of the horizontal cross-connect.

Technical Power Panel (TPP): In NMCI parlance, the dedicated power panel used to feed NMCI MC or IC equipment.

Transport Boundary: Suite of network security components configured to provide wide area network transport security.

TPP: Technical Power Panel.

UFAS: Uniform Federal Accessibility Standards.

vBNS+: is a specialized nationwide IP network that supports high-performance, high-bandwidth applications. Originating in 1995 as the very high performance Backbone Network Service (vBNS), vBNS+ is the product of a five-year cooperative agreement between WorldCom and the National Science Foundation.

Work Area (WA): A building space where the occupants interact with telecommunications terminal equipment.

WAN: Wide area network.

Figure B-1 Single line DRAWING of EIA/TIA Facility/Function Terminology

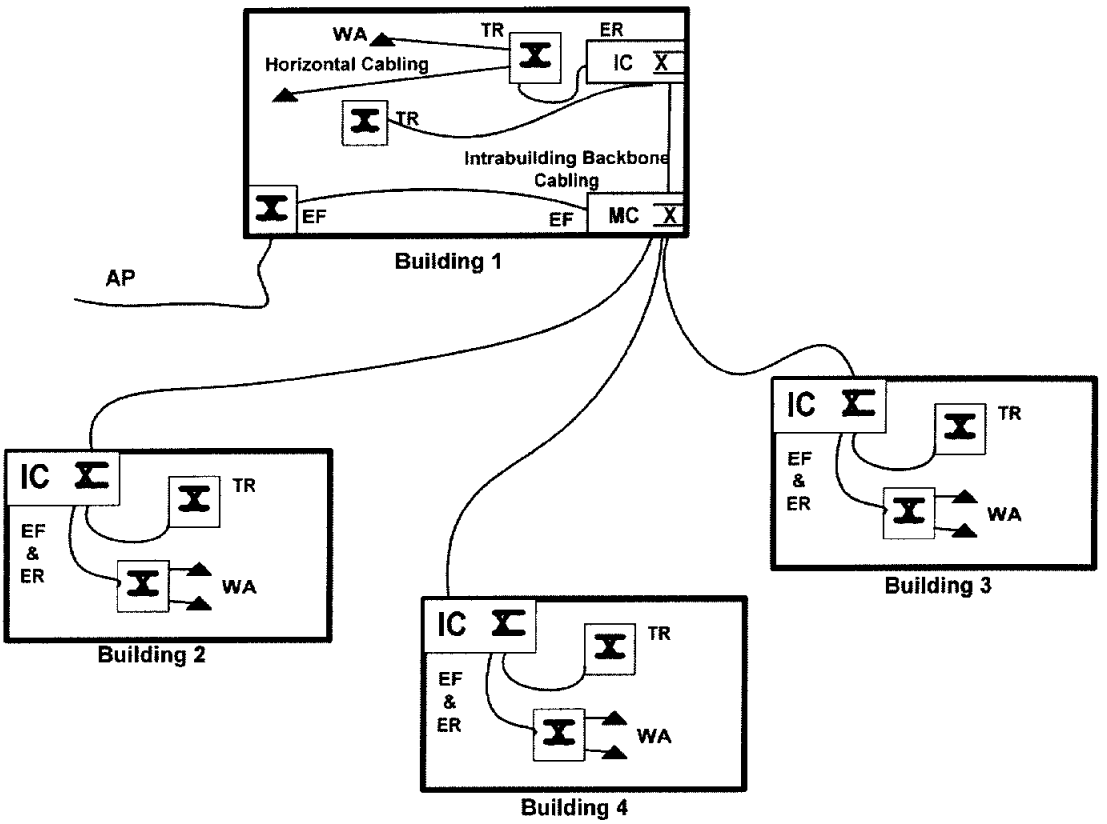

NOTES

1. This figure is not meant to be an all-inclusive representation of the telecommunications cabling system and is provided only as a typical example.

2. All cross-connects located in the telecommunications rooms (TR's) in this figure are horizontal cross-connects (HC's).

3. The equipment room (ER) for the POP would be connected to the access provider (AP) as in Building 1 in the example.

4. NMCI terminology/function has been limited to EF's and TR's. The function of the ER is included within the EF or TR.

Legend

Access Provider ..... AP
Entrance Facility ..... EF
Equipment Room ..... ER
Intermediate cross-connect IC
Main cross-connect ..... MC
Telecommunications Room ..... TR
Work Area ..... WA
Telecommunications outlet ..... ▲
Cross connect X

APPENDIX C

C-1 **STRUCTURAL.** Facilities including, modifications to walls, floors, ceilings, doors, and penetrations should be designed and built in accordance with UFC 1-200-01, "Design: General Building Requirements". This UFC has been recently issued by the DoD and adopts the International Building Code 2000 (IBC 2000) as the best standard commercial practice. In addition, the UFC adds some specific military requirements that exceed the minimum IBC 2000 guidelines to establish the minimum acceptable standards for DoD design and construction.

The EF and TR floors are of particular concern and must be capable of supporting the incoming equipment. Table C-1 incorporates the UFC requirements as well as information from Military Handbook 1002/2A *Structural Loads* defining the minimum uniform live loads. New facilities must be designed to ensure that they are capable of safely supporting the maximum loads (including equipment loads) likely to be imposed by the intended use, but not less that the minimum loads indicated in Table C-1. Existing facilities, and modifications to existing facilities, must be evaluated by a licensed structural engineer to verify that they are capable of safely supporting the maximum loads (including equipment loads) likely to be imposed by the intended use, but not less than the minimum loads indicated in Table C-1. ANSI/TIA/EIA-569A *Commercial Building Standards for Telecommunications Pathways and Spaces*, Annex B, identifies additional access floor loading design guidance requirements that must be considered.

Penetrations in existing walls and floors must be evaluated by a licensed structural engineer to verify that they do not adversely affect the structural integrity of the facility.

The NMCI standard minimum weight allowances for converted ER and TR spaces are as shown in Table C-2:

TABLE C-1 MINIMUM UNIFORMLY DISTIBUTED LIVE LOADS AND MINIMUM CONCENTRATED LIVE LOADS

OCCUPANCY or USE	UNIFORM (kPa)	UNIFORM (psf)	CONCENTRATED (kN)	CONCENTRATED (lbs)
Offices	2.4	50	8.9	2000
Computer Rooms (Business Equipment)	4.8	100	8.9	2000
Automatic Data Processing / Telephone Switch Rooms	7.2	150	8.9	2000
Access Floor Systems – Computer Use	4.8	100	8.9	2000

TABLE C-2 NMCI MINIMUM LOADS*

OCCUPANCY or USE	UNIFORM (kPa)	UNIFORM (psf)	CONCENTRATED (kN)	CONCENTRATED (lbs)
Converted Spaces for ERs	3.6	75	4.45	1000
Converted Spaces for TRs	2.4	50	No Recommendation	No Recommendation

* Floors must be designed to support the uniformly distributed live loads or the concentrated loads shown above, whichever produces the greater load effects. Unless otherwise specified, the indicated concentration is assumed to be uniformly distributed over a 0.76 by 0.76 m (2.5 by 2.5 ft) area (0.58m^2 (6.25 ft^2) and located to produce the maximum load effects in the structural members.

C-2 GROUNDING

C-2.1 **Facility Grounding.** All facility grounding must be in accordance with ANSI / TIA / EIA 607, Commercial Building Bond and Grounding Requirements for Telecommunications, according to Figure C-1. Grounding must also meet NFPA article 645.

C-2.2 **Equipment Grounding.** Dedicated equipment grounding is required. Bus bar size for Equipment Rooms (ER's) and Telecommunications Rooms (TR's) is 50.8 mm high by 300 mm wide by 3.4 mm tall (2 in x 12 in x ¼ in) minimum connected to building steel, or equivalent. Bus bars are to be drilled with parallel holes to accommodate 2-hole lugs. All grounding is to conform to ANSI/TIA/EIA standards. For converted NMCI spaces when the building does not meet the standard, the telecommunications backbone ground specified in ANSI / TIA / EIA 607 cannot be met. Instead, equipment is grounded to chassis, chassis is grounded to the cabinet and each cabinet is individually connected to the ground bar in its respective TR by ISF as indicated in Figure C-2.

C-3 **MECHANICAL.** Temperature is to be maintained at 23.8 ^{0}C +/- 5 ^{0}C (75 ^{0}F +/- 10 ^{0}F.) No humidity control is required. Under emergency conditions, variation of +/- 10 ^{0}C (+/- 20 ^{0}F) is acceptable. Cooling capacity is to be adequate to cover the completely built-out space with a 5% margin. Nominal heating load is 4.2-watts per square meter (45-watts per square foot) for the communications and IT equipment only. This load does not include the infrastructure such as lighting and cooling. Existing building cooling is acceptable provided the system is capable of preventing the equipment from overheating in the event of a commercial power interruption. Air systems such as variable air volume units are also acceptable to meet cooling requirements. An ISF provided independent cooling system for the POP equipment space is an ISF choice of last resort. The power requirements for the air conditioning equipment, when provided by ISF, are included in the electrical loads in Appendix D. Cooling guidelines are listed in Table 4-1.

- If cooling shuts off and power stays on, NMCI equipment must be cooled. Ambient exhaust ventilation must be sufficient to offer adequate cooling.

- If cooling shuts off and power shuts off, NMCI equipment will shut off once the UPS is depleted.

It is desirable that indoor air quality follows ASHRAE Standard 62 *Ventilation for Acceptable Indoor Air Quality*. The ambient temperature will be measured 1.5 m (5 ft) above the floor level, after the equipment is in operation, at any point along an equipment aisle center line. (EIA/TIA Standard 569A, Section 8, paragraph 8.2.3.6.3)

Figure C-1 Scope of EIA/TIA Standard 607 for Large Commercial Buildings

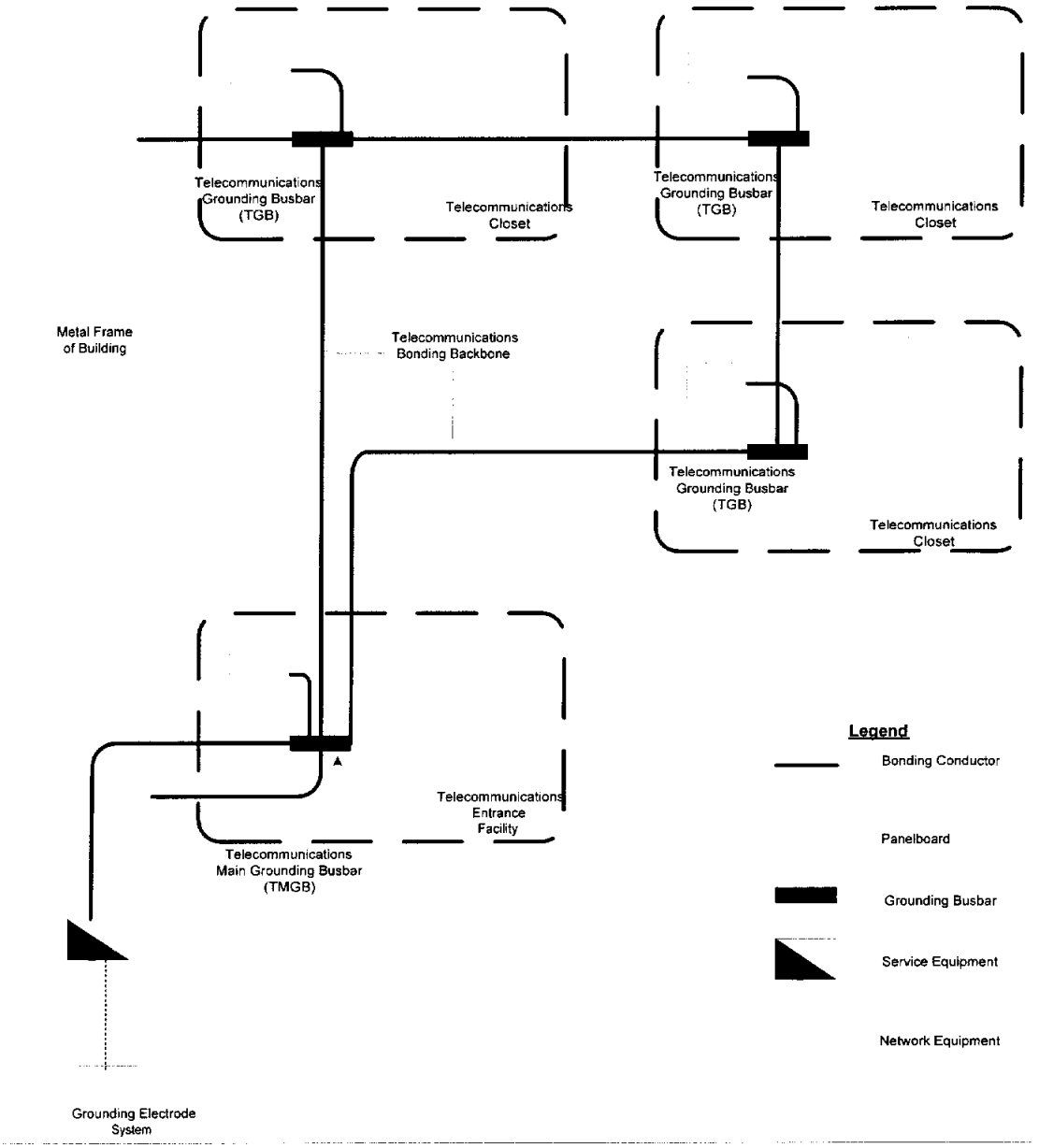

Exclusions from EIA/TIA 607

The Standard does not provide requirements for:

- Grounding and bonding of any telecommunications equipment or its associated wiring;
- Values of surge current immunity and insulation withstand voltages;
- Methods for verifying and maintaining bonding and grounding networks;
- Specific methods for RFI/EMI mitigation for equipment or systems/
- Protector/Arrester requirements;
- Specific user safety;
- Grounding and bonding practices of the local exchange carriers;
- The application and maintenance of the local exchange carrier's primary protection. Such protection shall be the responsibility of the local exchange carrier as mandated within FCC Rules and is not a part of this Standard;
- Electrical service entrance

FIGURE C-2 GROUNDING RECOMMENDATIONS FOR EIA-607 NON-COMPLIANT BUILDING

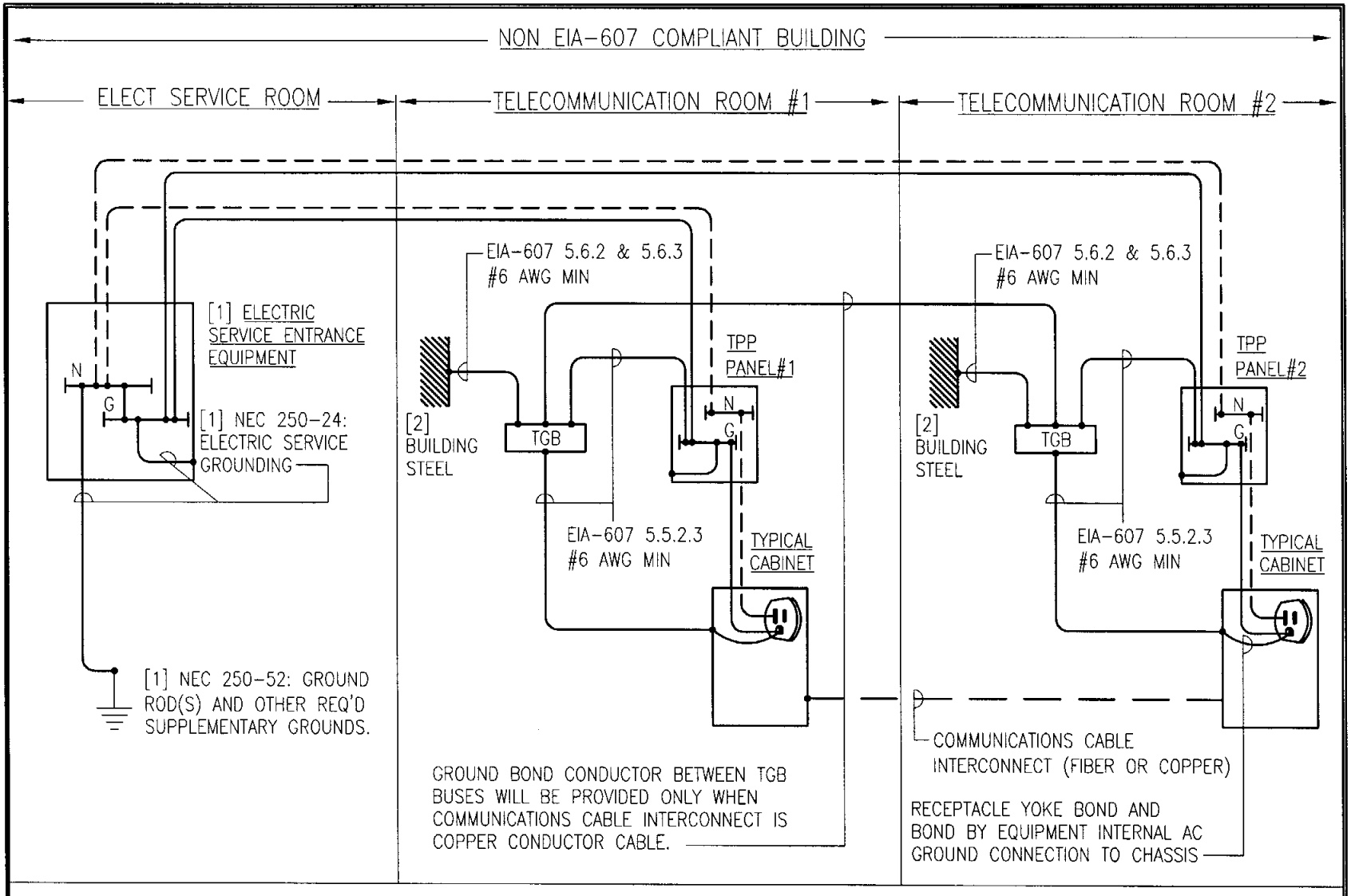

NOTES:

[1] = INSTALLED BY BUILDING OWNER

[2] = WHERE BUILDING STRUCTURAL STEEL IS ACCESSIBLE. EIA-607 5.6.2: IN BUILDINGS WHERE THE METAL FRAMES (STRUCTURAL STEEL) ARE EFFECTIVELY GROUNDED, EACH 'TGB' SHALL BE BONDED TO THE METAL FRAME WITHIN THE ROOM WITH A NO. 6 CONDUCTOR. EIA-607 5.6.3: WHERE THE METAL FRAME IS EXTERNAL TO THE ROOM AND READILY ACCESSIBLE THE METAL FRAME SHOULD BE BONDED TO THE 'TGB' WITH A NO. 6 CONDUCTOR.

Replace with Line Amperage Matrix from IDF Load Determination Report and appropriate notes

APPENDIX D

ELECTRICAL REQUIREMENTS

These notes refer to tables D-1, D-2 and D-3 on the following pages.

Notes:

- Load on building system will be based on the feeder amps not the breaker size
- If the requested additional load to the building, when added to the existing building loads, creates a marginal condition on the service size, then, the building loads will be looked at on an individual basis to verify actual demand load based on the actual NMCI seat count. The DoN and the NMCI Contractor will reach a business understanding between them when it is decided not to upgrade the existing service.
- If existing air conditioning within the facility is adequate to support the NMCI requirements, the air conditioning ampacity (site cooling amps) should be subtracted from the total feeder ampacity indicated. This would also reduce the breaker and wire sizes.

Table D-1 -- Point of Presence (POP)

Large Base No Server Farm (451 to 2000 Seats)

EQUIPMENT	VOLT (VOLT/Phase)	CABINET EQUIPMENT AMPS Phase A/B/C	SITE COOLING AMPS Phase A/B/C	FEEDER AMPS Phase A/B/C	FEEDERS BK AMP/POLE	FEEDERS Wire Size	COOLING Heat to Room (Btu/hr)
UPS	208Y/120 3PH	98 / 98 / 98	-	98 / 98 / 98	175A/3P	4#2/0, #6G, 2"C	123,719
UPS	208Y/120 3PH	6 / 6 / 6	-	6 / 6 / 6	175A/3P	4#2/0, #6G, 2"C	
A/C #1	208Y/120 3PH	-	56	56	100A/3P	3#3, #8 G, 1"C	
A/C #2	208Y/120 3PH	-	56	56	100A/3P	3#3, #8 G, 1"C	
- OR -							
SINGLE SITE FEEDER:				215	350A/3P	3-500KCM,1-3/0N,#1 G, 3-1/2"C	

Redundant Medium Base (251 to 450 Seats)

EQUIPMENT	VOLT (VOLT/Phase)	CABINET EQUIPMENT AMPS Phase A/B/C	SITE COOLING AMPS Phase A/B/C	FEEDER AMPS Phase A/B/C	TPP FEEDER BK AMP/POLE	TPP FEEDER Wire Size	COOLING Heat to Room (Btu/hr)
UPS	208Y/120 3PH	67	-	67	90A/3P	4#3, #8 G, 1.25"C	65,055
UPS	208Y/120 3PH	1	-	1	90A/3P	4#3, #8 G, 1.25"C	
A/C #1	208Y/120 3PH	-	29	29	60A/3P	3#6, #10 G, .75"C	
A/C #2	208Y/120 3PH	-	29	29	60A/3P	3#6, #10 G, .75"C	
- OR -							
SINGLE SITE FEEDER:				107	200A/3P	4-#3/0, #6 G, 2"C	

Redundant Small Base (17 to 250 Seats) [Two 1-Ton A/C units - Preferred]

MODE	VOLT (VOLT/Phase)	CABINET EQUIPMENT AMPS Phase A	CABINET EQUIPMENT AMPS Phase B	SITE COOLING AMPS Phase A	SITE COOLING AMPS Phase B	FEEDER AMPS Phase A	FEEDER AMPS Phase B	TPP FEEDER BK AMP/POLE	TPP FEEDER Wire Size	COOLING Heat to Room (Btu/hr)
NORMAL	120/208/1 PH.	17	14	20	20	37	34	70/2	3#4, #8 G, 1"C	11,137
UPS FAILURE	120/208/1 PH.	25	5	20	20	45	25			

Redundant Small Base (17 to 250 Seats Seats) [One 2-Ton A/C unit - Alternate]

MODE	VOLT (VOLT/Phase)	CABINET EQUIPMENT AMPS Phase A	CABINET EQUIPMENT AMPS Phase B	SITE COOLING AMPS Phase A	SITE COOLING AMPS Phase B	FEEDER AMPS Phase A	FEEDER AMPS Phase B	TPP FEEDER BK AMP/POLE	TPP FEEDER Wire Size	COOLING Heat to Room (Btu/hr)
NORMAL	120/208/1 PH.	17	14	17	17	33	30	70/2	3#4, #8 G, 1"C	11,137
UPS FAILURE	120/208/1 PH.	25	5	17	17	42	22			

Redundant Small Base (17 to 250 Seats) [Alternate Design with ECM Heat Removal]

MODE	VOLT (VOLT/Phase)	CABINET EQUIPMENT AMPS Phase A	CABINET EQUIPMENT AMPS Phase B	SITE COOLING AMPS Phase A	SITE COOLING AMPS Phase B	FEEDER AMPS Phase A	FEEDER AMPS Phase B	TPP FEEDER BK AMP/POLE	TPP FEEDER Wire Size	COOLING Heat to Room (Btu/hr)
NORMAL	120/208/1 PH.	17	14	13	13	30	27	70/2	3#4, #8 G, 1"C	1,106
UPS FAILURE	120/208/1 PH.	25	5	13	13	38	18			
									Cabinet Heat Removed by ECM =	10,032

Redundant Small Site (1 to 16 Seats) [Two 1-Ton A/C units - Preferred]

MODE	VOLT (VOLT/Phase)	CABINET EQUIPMENT AMPS Phase A	CABINET EQUIPMENT AMPS Phase B	SITE COOLING AMPS Phase A	SITE COOLING AMPS Phase B	FEEDER AMPS Phase A	FEEDER AMPS Phase B	TPP FEEDER BK AMP/POLE	TPP FEEDER Wire Size	COOLING Heat to Room (Btu/hr)
NORMAL	120/208/1 PH.	18	10	20	20	38	30	70/2	3#4, #8 G, 1"C	10,786
UPS FAILURE	120/208/1 PH.	26	2	20	20	46	22			

Redundant Small Site (1 to 16 Seats) [One 2-Ton A/C unit - Alternate]

MODE	VOLT (VOLT/Phase)	CABINET EQUIPMENT AMPS Phase A	CABINET EQUIPMENT AMPS Phase B	SITE COOLING AMPS Phase A	SITE COOLING AMPS Phase B	FEEDER AMPS Phase A	FEEDER AMPS Phase B	TPP FEEDER BK AMP/POLE	TPP FEEDER Wire Size	COOLING Heat to Room (Btu/hr)
NORMAL	120/208/1 PH.	18	10	17	17	35	27	70/2	3#4, #8 G, 1"C	10,786
UPS FAILURE	120/208/1 PH.	26	2	17	17	43	18			

Non-Redundant Small Base (17 to 250 Seats) [Heat Removal by Ventilation Only]

MODE	VOLT (VOLT/Phase)	CABINET EQUIPMENT AMPS		SITE COOLING AMPS		FEEDER AMPS		TPP FEEDER		COOLING
		Phase A	Phase B	Phase A	Phase B	Phase A	Phase B	BK AMP/POLE	Wire Size	Heat to Room (Btu/hr)
NORMAL	120/208/1 PH.	10	9	-	5	10	14	30/2	3#8, #10 G, 1"C	6,359
UPS FAILURE	120/208/1 PH.	19	-	-	5	19	5			

Non-Redundant Small Base (17 to 250 Seats) [On 1-Ton A/C Alternate]

MODE	VOLT (VOLT/Phase)	CABINET EQUIPMENT AMPS		SITE COOLING AMPS		FEEDER AMPS		TPP FEEDER		COOLING
		Phase A	Phase B	Phase A	Phase B	Phase A	Phase B	BK AMP/POLE	Wire Size	Heat to Room (Btu/hr)
NORMAL	120/208/1 PH.	10	9	10	10	20	19	50/2	3#8, #10 G, 1"C	6,359
UPS FAILURE	120/208/1 PH.	19	-	10	10	29	10			

Non-Redundant Small Site (1 to 16 Seats) [Heat Removal by Ventilation Only]

MODE	VOLT (VOLT/Phase)	CABINET EQUIPMENT AMPS		SITE COOLING AMPS		FEEDER AMPS		TPP FEEDER		COOLING
		Phase A	Phase B	Phase A	Phase B	Phase A	Phase B	BK AMP/POLE	Wire Size	Heat to Room (Btu/hr)
NORMAL	120/208/1 PH.	11	8	-	6	11	14	30/2	3#8, #10 G, 1"C	6,543
UPS FAILURE	120/208/1 PH.	18	-	-	6	18	6			

Non-Redundant Small Site (1 to 16 Seats) [One 1-Ton A/C unit - Alternate]

MODE	VOLT (VOLT/Phase)	CABINET EQUIPMENT AMPS		SITE COOLING AMPS		FEEDER AMPS		TPP FEEDER		COOLING
		Phase A	Phase B	Phase A	Phase B	Phase A	Phase B	BK AMP/POLE	Wire Size	Heat to Room (Btu/hr)
NORMAL	120/208/1 PH.	11	8	10	10	21	18	50/2	3#8, #10 G, 1"C	6,543
UPS FAILURE	120/208/1 PH.	18	-	10	10	28	10			

Table D-2 Main Cross Connect

	Main Cross Connect												
	CABINET	VOLT	CABINET EQUIPMENT AMPS *		SITE COOLING AMPS		FEEDER AMPS		TPP FEEDER		COOLING	SEATS
		(VOLT/Phase)	Phase A	Phase B	Phase A	Phase B	Phase A	Phase B	BK AMP/POLE	Wire Size	Heat to Room (Btu/hr)	
	A	120/208/1 PH.	18	16	17	17	35	33	60/2	3#6, #8G, 3/4"C	10,915	4,000 - 18,000
	A1	120/208/1 PH.	18	16	17	17	35	33	60/2	3#6, #8G, 3/4"C	10,915	4,000 - 18,000
Without	A	120/208/1 PH.	18	16	0	0	18	16	30/2	3#10, #10G, 3/4"C	10,915	4,000 - 18,000
Cooling	A1	120/208/1 PH.	18	16	0	0	18	16	30/2	3#4, #8G, 3/4"C	10,915	4,000 - 18,000
	A2 (Quan. 2)	120/208/1 PH.	35	35	20	20	55	55	80/2	3#4, #8G, 1"C	21,830	4,000 - 18,000
	A3	120/208/1 PH.	12	12	10	10	22	22	60/2	3#6, #8G, 3/4"C	7,197	450 - 12,000
	A4	120/208/1 PH.	11	11	10	10	21	21	60/2	3#6, #8G, 3/4"C	7,197	450 - 12,000
	A4A	120/208/1 PH.	11	9	10	10	21	19	60/2	3#6, #8G, 3/4"C	6,331	450 - 12,000
Without	A4	120/1 PH.	20	0	0	0	20	0	30/1	2#10, #10G, 3/4"C	7,197	450 - 12,000
Cooling	A4A	120/1 PH.	17	0	0	0	17	0	30/1	2#10, #10G, 3/4"C	6,331	450 - 12,000
	B	120/208/1 PH.	15	0	10	10	25	10	50/2	3#6, #10G, 3/4"C	6,189	17 - 5,000
Without	B	120/1 PH.	15	0	0	0	15	0	30/1	2#10, #10G, 3/4"C	6,189	17 - 5,000
	K	120/208/1 PH.	18	18	17	17	35	35	60/2	3#6, #8G, 3/4"C	13,848	450 - 12,000
	K (UPS Fault)	120/208/1 PH.	26	10	17	17	43	27				
Without	K	120/208/1 PH.	18	18	0	0	18	18	40/2	3#8, #10G, 3/4"C	13,848	450 - 12,000
Cooling	K (UPS Fault)	120/208/1 PH.	26	10	0	0	26	10				
	P	120/208/1 PH.	15	18	0	0	15	18	40/2	3#8, #10G, 3/4"C	3644 to ECM	450 - 12,000
	P (UPS Fault)	120/208/1 PH.	23	10	0	0	23	10				

* LOAD INCLUDES 1.5 AMPS FOR A CONVENIENCE OUTLET PER CABINET, WHICH IS NOT INDICATED ON CABINET ELEVATION SHEETS.

Table D-3 Intermediate Cross-Connect

	Intermediate Cross Connect											
	CABINET	VOLT	CABINET EQUIPMENT AMPS *		SITE COOLING AMPS		FEEDER AMPS		TPP FEEDER		COOLING	SEATS
		(VOLT/Phase)	Phase A	Phase B	Phase A	Phase B	Phase A	Phase B	BK AMP/POLE	Wire Size	Heat to Room (Btu/hr)	Maximum seat count listed
	C	120/208/1 PH.	7	3	10	10	17	13	50/2	3#6, #10G, 3/4"C	3,644	60 to 192
	C1	120/1 PH.	14	0	0	0	14	0	30/1	2#10, #10G, 3/4"C	4,928	72
	C2	120/1 PH.	14	0	0	0	14	0	30/1	2#10, #10G, 3/4"C	4,928	72
No Cooling	C	120/1 PH.	10	0	0	0	10	0	30/1	2#10, #10G, 3/4"C	3,644	240
	D	120/208/1 PH.	8	10	10	0	18	10	30/2	3#10, #10G, 3/4"C	3,091 to ECM	60 to 110
	G1	120/208/1 PH.	14	4	0	0	14	4	30/2	3#10, #10G, 3/4"C	2489 to ECM	72
	H	120/1 PH.	14	0	0	0	14	0	30/1	2#10, #10G, 3/4"C	4,928	72
	H1	120/1 PH.	8	0	0	0	8	0	30/1	2#10, #10G, 3/4"C	2,696	48
	H2	120/1 PH.	9	0	0	0	9	0	30/1	2#10, #10G, 3/4"C	2,259	24
	I	120/1 PH.	9	0	0	0	9	0	30/1	2#10, #10G, 3/4"C	2,259	24
	I3	120/1 PH.	2	0	0	0	2	0	30/1	2#10, #10G, 3/4"C	717	24
	J	120/1 PH.	8	0	0	0	8	0	30/1	2#10, #10G, 3/4"C	3,810	48
	N	120/1 PH.	8	0	0	0	8	0	30/1	2#10, #10G, 3/4"C	2,696	48

FIGURE D-1: TYPICAL ONE-LINE DIAGRAM FOR FACILITY POPS

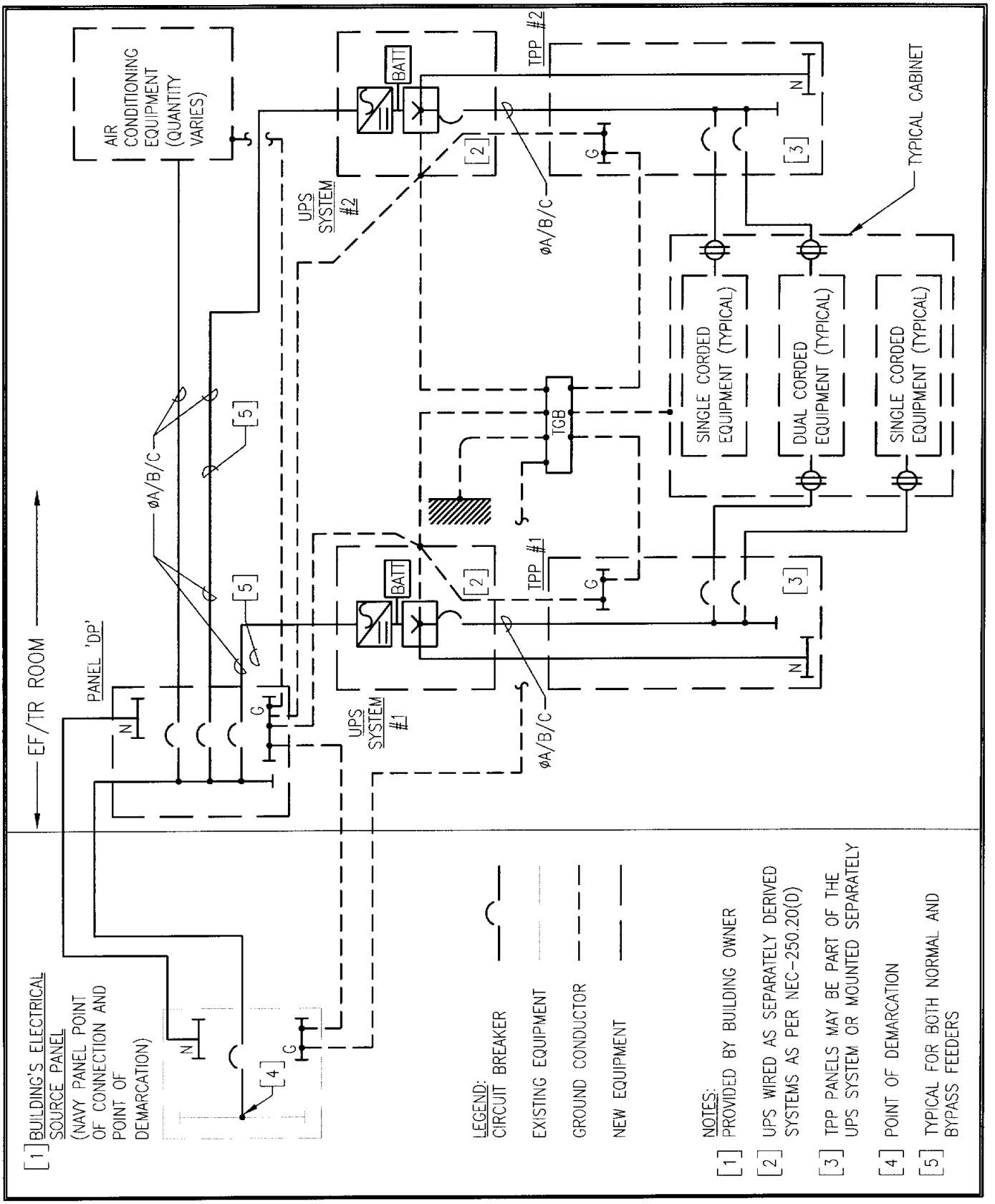

FIGURE D-2: TYPICAL ONE-LINE DIAGRAM FOR FACILITY MC's/IC's

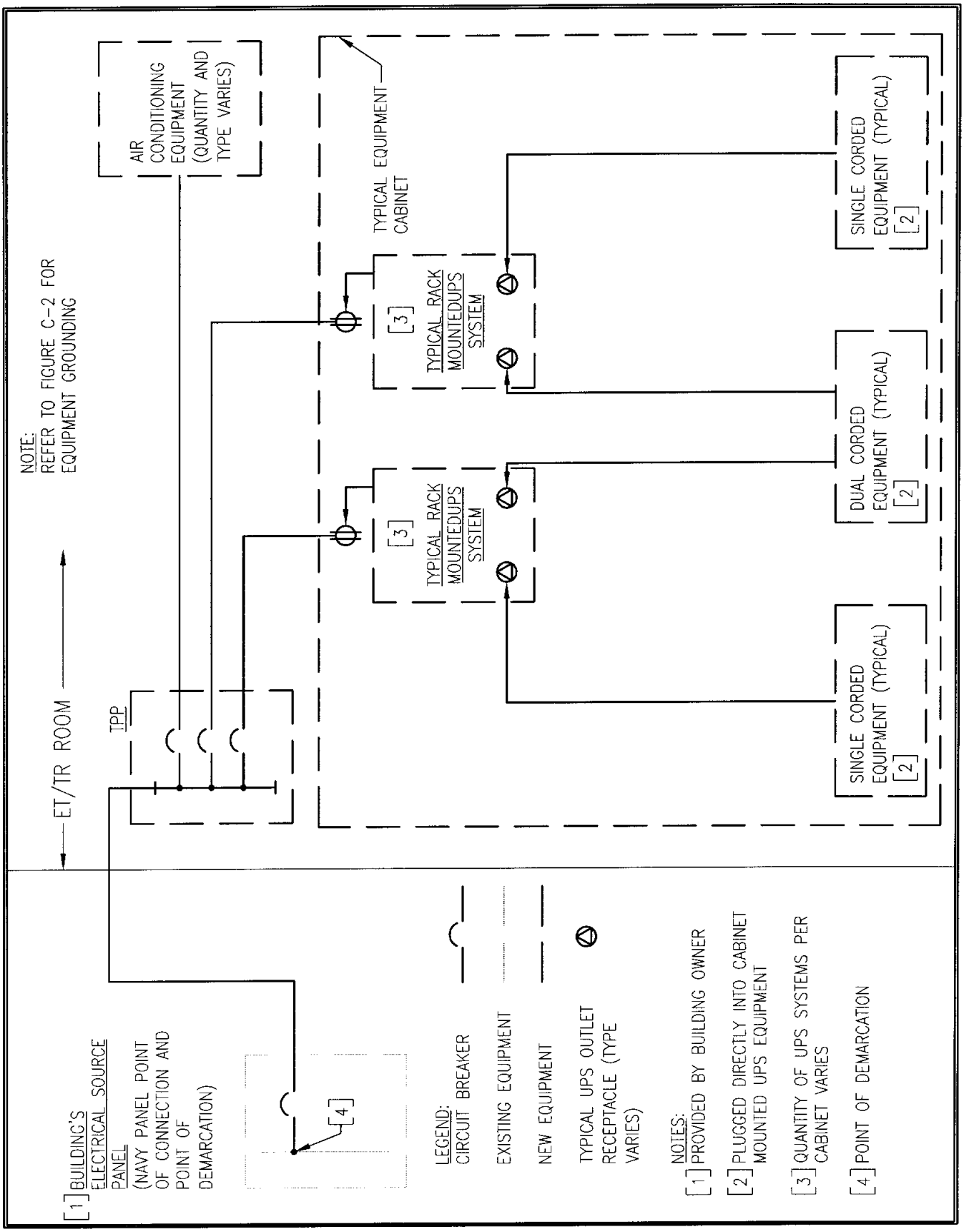

SECTION 01012

DESIGN AFTER AWARD
(DESIGN/BUILD)
01/2002

1. GENERAL

The Contractor shall furnish and be responsible for a complete set of design documents as called for in Section 01010, GENERAL PROJECT DESCRIPTION AND DESIGN REQUIREMENTS and as called for hereinafter.

1.1 Within 30 days after Notice to Proceed (NTP), the Contractor shall submit, for approval, a complete design schedule with all submittals and review times indicated in calendar dates. The Contractor shall update this schedule monthly. No design submittals will be reviewed or evaluated until after receipt and acceptance of the proposed design/review schedule. As a minimum, design submittals are required at the preliminary (60%), final (100%), and at the design complete (corrected final) stage. The requirements of each design stage are listed hereinafter. The Contractor shall reflect the number and schedules for the design submittals phases in the progress charts. The 60%, 100%, and design complete submittals shall each be made in one consolidated package, which includes each of the major categories listed in paragraph “Contents of Design Submittals.”

2. DESIGNER OF RECORD

The Contractor shall identify, for approval, the Designer of Record for each area of work. One Designer of Record may be responsible for more than one area. A listed, registered Designer of Record shall account for all areas of design disciplines. The Designer(s) of Record shall stamp, sign, and date all design drawings under their responsible discipline at each design submittal stage.

3. DEFINITION OF DESIGN SUBMITTALS

3.1 Corrected Proposal Submittal

The Contractor shall submit 7 copies of corrected drawings and technical proposal notebooks which incorporate any corrections on clarification items or deficiencies noted during negotiations for distribution to the Users and Government agencies. Submit the drawings in half size to the project manager within 30 days after contract award. This item only applies to the successful proposer after contract award.

3.2 Preliminary Conformance Review Submittal (60%). This submittal is intended to insure that the Contractor's design is proceeding in accordance with the terms of the solicitation and the Contractor's original proposal as well as in a timely manner. This submittal shall consist of the following:

a. Design analysis, developed to 60%.

b. 60% complete drawings.

c. Draft specifications.

3.3 Final Design Submittal (100%)

The review of this submittal is to insure that the design is in accordance with directions provided the Contractor during the design process as well as

the original solicitation and the Contractor's proposal. The Contractor shall submit the following documents for Final Design Review:

3.3.1 60% review comments and responses annotated.

3.3.2 The Design Analysis submitted for Final Design Review shall be in its final form. The Design Analysis shall include all backup material previously submitted and revised as necessary. All design calculations shall be included. The Design Analysis shall contain all explanatory material giving the design rationale for any design decisions which would not be obvious to an engineer reviewing the final drawings and specifications.

3.3.3 The contract drawings submitted for Final Design Review shall include the drawings previously submitted which have been revised and completed as necessary. The Contractor is expected to have completed all of his coordination checks and have the drawings in a design complete condition. The drawings shall be complete at this time including the incorporation of any design review comments generated by the previous design reviews. The drawings shall contain all the details necessary to assure a clear understanding of the work throughout construction. Shop drawings will not be considered as design drawings. All design shall be shown on design drawings prior to submittal of shop drawings. Each discipline has unique Final Design submittal requirements. Respective chapters of the Savannah District Design Manual should be reviewed to determine the exact nature of these requirements.

Example for HVAC Controls: HVAC Controls System Drawings (MC-Plates) shall be submitted at the final design stage and shall include the following.

HVAC Controls System Legend
Control System Schematic
Equipment Schedule
Valve Schedule
Damper Schedule
Sequence of Operations
I/O Summery table and Data Terminal Strip Diagram
Wiring Diagram
Communications Network and Block Diagram
Metering of Utilities (gas, electrical and water)
DDC Panel locations

The control drawings shall use the Corps of Engineers standard control drawings. These drawings are available at the following website: http://www.hnd.usace.army.mil/techinfo/ or on the SAS_STD CD available from the project manager.

3.3.4 The draft specifications on all items of work submitted for Final Design Review shall consist of legible marked up guide specification sections.

3.3.5 Not used

3.4 Design Complete Submittal (Corrected Final)

After the Final Design Review, the Contractor shall revise the Plans & Specs. by incorporating any comments generated during the Final Design Review and shall prepare final hard copy Deliverables/Submittals. The Contractor shall submit the following documents for the design complete submittal:

3.4.1 Design analysis, in final 100% complete form.

3.4.2 100% complete drawings.

3.4.3 Final specifications.

3.4.4 Final review comments and responses.

3.4.5 Electronic Submission.

All CADD files in native MicroStation format, as well as all prepared technical specifications shall be provided on CD-ROM. Two copies are required.

3.5 Structural Interior Design (SID).

3.5.1 Definition: The Structural Interior Design (SID) shall involve the selection and sampling of all applied finishes including material, color, texture and patterns necessary to complete the building's interior architectural features. The SID shall also include all prewired workstation finishes and required drawings for prewired workstations. This information shall be submitted in 3-inch D-ring binders, 8-1/2 inch x 11-inch format.

3.5.2 Present architectural finish samples in an orderly arrangement according to like rooms/areas receiving like finishes. Each like room receiving like finishes will be noted as a Color Scheme. Each Color Scheme shall have a written description of material used. This written description shall use the same material abbreviations and notes that appear on the Room Finish Schedule and Legend in the contract drawings. Present prewired workstation finishes on a color board separate from the architectural finishes. Submit the SID binders concurrently with the architectural design submittals.

3.5.3 Preliminary Submittals: The Contractor shall submit complete sets of the initial SID package. The design philosophy shall use a warm neutral background color with appropriate accent colors. All SID proposals shall be reviewed and approved by the Government. The Interior Designer shall revise the SID binders after each review and update the SID to satisfy review comments. Each submittal will follow this method of review until the Government approves the completed SID package.

3.5.4 Final Submittal: After approval of the Preliminary Submittal, the Contractor shall submit complete sets of the approved and final Structural Interior Design packages. Once the Contractor has submitted the SID and the Government has approved the submittal, all materials, finishes, colors, textures and pattern submitted and approved for this project are then considered as part of the contract and the Contractor shall furnish all approved SID finishes. No deviations will be considered.

3.5.5 Format: Submit all SID information and samples on 8 1/2"x 11" modules with only one foldout. The maximum foldout width shall be approximately 25 inches. No foldouts on the top or bottom of the pages. Place the project title, base, architectural firm, page number and date on the bottom of each page or module.

3.5.5.1 The module shall support and anchor all samples. Anchor large or heavy samples with mechanical fasteners, velcro or double sided foam tape. Rubber cement or glue will not be acceptable.

3.5.5.2 Assemble the 8-1/2 inch x 11-inch pages and modules in a 3-inch D-ring binder. Holes for placement of the modules in the binder shall be 3/8 inch in diameter. Each binder shall be identified on the outside spine and front cover by title, project number, percentage phase and date.

3.5.5.3 Material and finish samples shall indicate true pattern, color and texture. Carpet samples shall be large enough to indicate a complete pattern or design.

3.5.5.4 Where paint manufacturers' color names and numbers are used indicate the finish of the paint such as gloss, semi-gloss, flat and so on.

3.5.5.5 Signage may include emblems, striping, letters, numbers and logos. The interior designer shall consider visual appearance, organization, location, structural supports (if required) and relation to other base graphics. Indicate on a separate signage sheet the location and message for all signage. Submit a sample of the signage material finish and color with the structural finishes.

3.5.5.6 No photographs or colored photocopies of materials will be accepted or approved.

3.5.6 The SID binder shall include the following information at each design submittal in this order:

==========

SEQUENCE OF SID SUBMITTAL

1. Title page

2. Table of contents

3. Design objectives - A statement of design objectives explaining the interior design philosophy of the facility shall be provided in the SID. Design objectives and the proposed method of accomplishing the objectives. Shall cover, when applicable, energy efficiency, safety, health, maintenance, image, personal performance of occupants and functional flexibility.

4. Interior floor plan

5. Interior sample finish boards (Color boards)

Scheme A
Scheme B
Scheme C

Example all restrooms could be noted as color scheme "A", all general open office finishes could be noted as color scheme "B" and the main lobby could be noted as color scheme "C".

6. Room finish schedule

7. Signage

8. Signage plan

9. Prewired workstation composite floor plans

10. Prewired workstation typicals - elevations and component inventory.

11. Prewired workstation panel identification plan with electrical outlet placement including base feed.

12. Integration and layout of specific furniture. Plan must show suitability of proposed space to suit the furniture to be provided.

==========

4. GOVERNMENT APPROVED DESIGN SUBMITTALS

The approval of submittals by the Contracting Officer shall not be construed as a complete check, but will be a check only for conformance with the contract requirements. Approval will not relieve the Contractor of the responsibility for any error which may exist, as the Contractor is responsible for the design and construction of all work.

5. MAILING OF SUBMITTALS

All submittals to the Government during design shall be mailed using overnight mailing service. Each copy of the submittals shall be mailed to the addresses listed below. Each submittal shall have a transmittal letter accompanying it that indicates the date, design percentage, type of submittal, list of items submitted, transmittal number and point of contact with telephone number.

Addresses and submittal distribution:

1. U.S. Army Engineer District, Savannah
ATTN: CESAS-PM-MC (Mr. Tim Morris)
100 W. Oglethorpe Avenue
Savannah, GA 31401

2. U.S. Army Corps of Engineers,
ATTN: CESAS-CD-STH (Mr. Robert Unger)
P.B 101, Billy Mitchell Drive
Hunter Army Airfield, GA 31409

3. Southern Division Naval Facilities
ATTN: **Code BDC** (Leigh Burke)
2155 Eagle Dr.
N. Charleston, SC 29419

4. Marine Forces Reserve Facilities
ATTN Maj. Craig E. Monroe
4400 Dauphine St. Ste. 5B101
New Orleans, LA 70146

5. Directorate of Public Works
ATTN: Project Management Office (Anne de la Sierra)
Bldg. 1021, Stephen Douglas St., Suite 100,
Hunter AAF, GA 31409

6. Director USAISEC-FDEO
ATTN: AMSEL-IE-DE-IN-CO (Mr. Gaffney)
1435 Porter Street, Suite 2000
Fort Detrick, Maryland 21702-5047

7. Eastern Paralysed Veterans Assn.
Architecture & Facilities Management
75 – 20 Astoria Blvd.

Queens, NY 11370-1178

8. CAPT. KIRK M. SPANGENBERG
INSPECTOR-INSTRUCTOR
2nd Beach & Terminal Ops Co.
4th LSB, 4th FSSG
246 Blanton Road, Bldg. 1031, Suite 100
Hunter Army Airfield, GA 31409

The following table lists the number of copies of design submittal requirements for this project:

Note that some of the COE SAS copies in the chart below may be sent to as many as three additional addresses not shown for review. The design-build contractor will not receive additional payment for these extra mailings.

Corrected Proposal (CP): half size drawings and corrected notebooks distributed as below.

	# Item 60%	# Item Final	# Item Corrected Final	CP
(1) COE SAS	8 Design Anal. 8 Drawings(7 full, 1 half) 8 Spec. 2 Permit Appl. 1 SID 1 CID	8 Design Anal. 8 Drawings(7 full, 1 half) 8 Spec 8 Ann. Comments 2 Permit Docum. 1 SID 1 CID	8 Design Anal. 8 Drawings (7 full & 1 half) 8 Spec. 8 Ann. Comments 2 CD's w/all electronic files	2
(2) CD-STH	2 Design Anal. 4 Drawings(1 full, (3 half) 3 Spec. 2 Permit Appl. 1 SID 1 CID	2 Design Anal. 4 Drawings (1 full & 3 half) 3 Spec. 2 Ann. Comments 2 Permit Docum. 1 SID 1 CID	1 Design Anal. 5 drawings (Half size) 5 Spec. 5 Ann. Comments 1 Drawings, full size 2 CD's w/ all electronic files, (1 DGN format, 1 CAL Files)	2
(3) SDNF	1 Design Anal. 1 Drawings(half size) 1 Spec. 1 SID 1 CID	1 Design Anal. 1 Drawings(half size) 1 Spec. 1 Ann. Comments	1 Design Anal. 1 Drawings(half size) 1 Spec. 1 Ann. Comments	1
(4) MFRF	1 Design Anal. 1 Drawings(half size) 1 Spec. 1 SID 1 CID	1 Design Anal. 1 Drawings(half size) 1 Spec. 1 Ann. Comments 1 SID 1 CID	1 Design Anal. 1 Drawings(half size) 1 Spec. 1 Ann. Comments	1
(5)	5 Design Anal.	5 Design Anal.	2 Design Anal.	1

DPW	8 Drawings(Full Size) 5 Spec. 2 Permit Appl. 1 SID 1 CID	8 Drawings(Full Size) 5 Spec. 2 Ann. Comments 2 Permit Docum. 1 SID 1 CID	2 Drawings (Full size) 2 Spec. 2 Ann. Comments 2 Permit Docum. 2 CD’s w/all electronic files(1 DGN Format, 1 CAL Files)	
(6) ISEC	1 Design Anal. 2 Drawings(1 full 1 half) 2 Spec.	1 Design Anal. 2 Drawings-(1&1) 2 Spec. 2 Ann. Comments		0
(7) EPVA	1 Design Anal. 1 Drawings 1 Spec.	1 Design Anal. 1 Drawings 1 Spec. 1 Ann. Comments		0
(8) 2nd BTO	0 Design Anal. 1 Drawings(1 full, (half) 1 Spec. 1 SID 1 CID	0 Design Anal. 1 Drawings (1&2) 1 Spec. 1 Ann. Comments 1 SID 1 CID	0 Design Anal. 1 Drawings 1 Spec. 1 Ann. Comments	0

6. GOVERNMENT REVIEWS

The Government will take 24 days to review and comment on each design submittal. For each design review submittal, the COR will furnish, to the Contractor, a single consolidated listing of all comments from the various design sections and from other concerned agencies involved in the review process. The review will be for conformance with the technical requirements of the solicitation and the Successful Offeror's (Contractor's) RFP proposal. If the Contractor disagrees technically with any comment or comments and does not intend to comply with the comment, he must clearly outline, with ample justification, the reasons for noncompliance within 5 days after receipt of these comments in order that the comment can be resolved. The Contractor shall furnish disposition of all comments, in writing, with the next scheduled submittal. The Contractor is cautioned in that if he believes the action required by any comment exceeds the requirements of this contract, that he should take no action and notify the COR in writing immediately. Review conferences will be held for each design submittal at the Installation. The Contractor shall bring the appropriate design staff to the review conference. These conferences will take place the week after the receipt of the comments by the Contractor.

ProjNet/DrChecks is the required method for preparing and annotating comments. This is an Internet based database available on the Internet at:

http://65.204.17.188/projnet/home/version1/

User ID and password will be granted at the submittal stage.

6.1 If a design submittal is late by the approved schedule, the review will slip accordingly. The review process will not be shortened. Submittals date

revisions must be made in writing at least 1 week prior to the effect submittal.

6.2 Post review conference action: Copies of comments, annotated with comment action agreed on, will be made available to all parties before the conference adjourns. Unresolved problems will be resolved by immediate follow-on action at the end of conferences. Valid comments will be incorporated. After receipt of final corrected design documents upon incorporation of backcheck comments the Project Manager will recommend issuance of a Construction Notice to Proceed (NTP). The Government, however, reserves the right to disapprove design document submittals if comments are significant. If final or backcheck submittal(s) are incomplete or deficient, and require correction by the Contractor and resubmittal for review, the cost of rehandling and reviewing will be deducted from payment due the Contractor at the rate of $5,000.00 per submittal.

7. COORDINATION

7.1 Written Records

The Contractor shall prepare a written record of each design site visit, meeting, or conference, either telephonic or personal, and furnish within 5 working days copies to the Contracting Officer and all parties involved. The written record shall include subject, names of participants, outline of discussion, and recommendation or conclusions. Number each written record for the particular project under design in consecutive order.

7.2 Design Needs List

Throughout the life of his contract the Contractor shall furnish the COR a monthly "needs" list for design related items. This list shall itemize in an orderly fashion design data required by the Contractor to advance the design in a timely manner. Each list shall include a sequence number, description of action item, name of the individual or agency responsible for satisfying the action item and remarks. The list will be maintained on a continuous basis with satisfied action items checked off and new action items added as required. Once a request for information is initiated, that item shall remain on the list until the requested information has been furnished or otherwise resolved. Copies of the list will be mailed to both the Administrative Contracting Officer and the agencies tasked with supplying the information. It is highly recommended that the Corps' RFI system be utilized during the design phase for this purpose. The system has report capability. User access and passwords will be furnished at the time needed with over the phone instructions.

8. DESIGN ANALYSIS

8.1 Media and Format

Present the design analysis on 8-1/2-inch by 11-inch paper except that larger sheets may be used when required for graphs or other special calculation forms. All sheets shall be in reproducible form. The material may be typewritten, hand lettered, handwritten, or a combination thereof, provided it is legible. Side margins shall be 1-inch minimum to permit side binding and head to head printing. Bottom margins shall be 1-1/4 inches, with page numbers centered 1 inch from the bottom.

8.2 Organization

Assign the several parts and sheets of the design analysis a sequential binding number and bind them under a cover indicating the name of the facility and project number, if applicable. The title page shall carry the designation of the submittal being made. The complete design analysis presented for final review with the final drawings and specifications shall carry the designation "FINAL DESIGN ANALYSIS" on the title page.

8.3 Design Calculations

Design calculations are a part of the design analysis. When they are voluminous, bind them separately from the narrative part of the design analysis. Present the design calculations in a clean and legible form incorporating a title page and index for each volume. Furnish a table of contents, which shall be an index of the indices, when there is more than one volume. Identify the source of loading conditions, supplementary sketches, graphs, formulae, and references. Explain all assumptions and conclusions. Calculation sheets shall carry the names or initials of the author and the checker and the dates of calculations and checking. No portion of the calculations shall be computed and checked by the same person.

8.4 Automatic Data Processing Systems (ADPS)

When ADPS are used to perform design calculations, the design analysis shall include descriptions of the computer programs used and copies of the ADPS input data and output summaries. When the computer output is large, it may be divided into volumes at logical division points. Precede each set of computer printouts by an index and by a description of the computation performed. If several sets of computations are submitted, they shall be accompanied by a general table of contents in addition to the individual indices. Preparation of the description which must accompany each set of ADPS printouts shall include the following:

a. Explain the design method, including assumptions, theories, and formulae.
b. Include applicable diagrams, adequately identified.
c. State exactly the computation performed by the computer.
d. Provide all necessary explanations of the computer printout format, symbols, and abbreviations.
e. Use adequate and consistent notation.
f. Provide sufficient information to permit manual checks of the results.

9. DRAWINGS

9.1 Prepare all drawings on Computer-Aided Design and Drafting (CADD) so that they are well-arranged and placed for ready reference and so that they present complete information. The Contractor shall prepare the drawings with the expectation that the Corps of Engineers, in the role of supervision, will be able to construct the facility without any additional assistance from the Contractor. Drawings shall be complete; unnecessary work such as duplicate views, notes and lettering, and repetition of details shall not be permitted. Do not show standard details not applicable to the project, and minimize unnecessary wasted space. Do not include details of standard products or items which are adequately covered by specifications on the drawings. Detail the drawings such that conformance with the RFP can be checked and to the extent that shop drawings can be checked. Do not use shop drawings as design drawings. The Contractor shall use standard Corps of Engineers title blocks and borders on all drawings. Submit an index of drawings with each submittal. The COR will furnish the Contractor file number, drawing name prefix, and specifics for inclusion in the title blocks of the drawings.

9.2 Create all drawings using CADD methods in MicroStation format. Save all Design Complete CADD files as MicroStation 5.0 or later version. The Contractor shall use EM 1110-1-1807 Standards Manual for U.S. Army Corps of Engineers Computer-Aided Design and Drafting (CADD) Systems as guidance for standard details, cell libraries, title blocks, and layer/level assignments. Drawing features not addressed in EM 1110-1-1807 shall conform to drafting standards.

9.3 Only standard fonts provided by MicroStation are allowed to be used in the creation of CADD files. No fonts created by third parties or the designer are permitted.

9.4 The uses of reference files and model files during the design stage is up to the discretion of the designers. All CADD files at Design Complete submittal shall be in separate folders by discipline or building, free standing, independent files by folder. All reference files shall be in the same folder as the design files. Example of folders, Civil, Building 1, Building 2, etc.

9.5 Submit all Design Complete CADD files on read/write CD-ROM disk.

10. SPECIFICATIONS

10.1 The Contractor shall submit marked-up and final specifications as required. The specifications shall be Unified Facilities Guide Specifications (UFGS). Edit the specifications for this project and submit in marked up or redlined draft version at the Final Review submittal stage. If the design is based on a specific product, the specification shall consist of the important features of the product. The specification shall be detailed enough such that another product meeting the specification could be substituted and it would not adversely impact the project. After incorporation of comments, submit a final, design complete specification package. Delete all marked out or redlined text and type in all inserted text. Unified Federal Guide Specifications (UFGS) and Savannah District Guide Specifications are available on the Internet at:

http://www.hnd.usace.army.mil and http://en.sas.usace.army.mil/

Specsintact software is available free of charge at:

http://si.ksc.nasa.gov/specsintact

These specifications shall be edited and tailored by the Contractor to meet the requirements of the project under design.

10.2 Submittal Register

Develop the construction submittal requirements during the design phase of the contract. List the submittal requirements in paragraph SUBMITTALS of each specification section. The SPECSINTACT program generates a submittal register from these paragraphs. Include this register at the end of Section 01330 SUBMITTAL PROCEDURES (DESIGN BUILD). The Contractor shall be responsible for listing all required submittals necessary to insure the project requirements are complied with. The submittals paragraph shall identify submittal items such as shop drawings, manufacturer's literature, certificates of compliance, material samples, guarantees, test results, etc. that the Contractor shall submit for review and/or approval action during the life of the construction contract.

11. CONTENTS OF DESIGN SUBMITTALS

11.1 The 100% site/utility design submittal shall contain as a minimum, the following:

11.1.1 General Narratives

11.1.1.1 Site/Layout

Explanation of objectives and factors influencing siting decisions. General overview of major site features planned, such as building orientation, drainage patterns, parking provisions, traffic circulation, provisions for the handicapped, security requirements, etc. Rationale for locating major site elements. Set back requirements or specific clearance requirements. Locations of borrow and spoil areas.

11.1.1.2 Utility Systems

Design narrative for the natural gas, water supply, storm drainage, and wastewater systems relating to this project. Include an analysis of the existing distribution systems capability to supply sufficient quantity at adequate levels. If the existing distribution systems are inadequate, provide the design solution to augment the systems to provide the requirements for the new facilities.

11.2 All drawings included in the required technical data for the proposal submission (see Contract Clause, TECHNICAL SUBMISSION REQUIREMENTS AND INSTRUCTIONS) shall be developed to 100 percent completion. In addition to the individual utility plans, submit a combined utility plan drawn to the same scale as the individual utility plans.

11.2.1 General Site Layout

Scale shall be included.

11.2.2 Site Grading and Drainage Plans

Show locations of all sediment basins, diversion ditches, and other erosion control structures. Indicate the approximate drainage areas each will service. Indicate the materials, construction and capacity of each structure. Include limits of landscaping and seeded areas. General site grading and drainage shall be indicated by contour lines with an interval of not more than approximately 1 foot.

11.2.3 Road Alignment Plans

Scale shall be no greater than 1"=30' and profiles showing pavement and shoulder widths, azimuths and curve data, limits of grading, and erosion control. The materials to be used shall be indicated.

11.2.4 Traffic Control Plan

Traffic routing and signage shall be in accordance with The Manual on Uniform Traffic Control Devices for Streets and Highways, U.S. Department of Transportation, Federal Highways Administration.

11.2.5 Parking Lots

Show the actual dimensions of parking lots and measurements from a known reference point rather than coordinates at corners. Show the number of parking spaces.

11.2.6 Sanitary Sewer Plan

Scale shall be 1"=30' and profiles showing location and elevation of pipe, thrust blocks, manholes, etc. Materials and construction of main and appurtenances shall be indicated. Specifications shall be provided.

11.2.7 Water Supply Line Plans

Scale shall be 1"=30' and profiles showing locations of valves, thrust blocks, connections, etc. Materials shall be indicated and specifications shall be provided for valves, pipes, etc.

11.2.8 Electrical Plan Requirements

11.2.8.1 Required diagrams and details on Site Electrical Drawings.

a. Off-Site Electrical Distribution Plan:
b. Off-Site Primary Circuit Routing Plans:
c. Off-Site One Line Diagram. (If applicable)
d. Off-Site Details. (Aerial Pole Line Construction, etc.) (If applicable).
e. On-Site Electrical Distribution Plan:
f. On-Site One Line Diagram.
g. On-Site Distribution Transformer Schedule: Provide with the following headings:
   Transformer Designation.
   Transformer Size (KVA).
   Building(s) Served.
   Primary Phase(s) and Circuit to which connected.
h. On-Site Details (Site Lighting, Trenching, Pad-Mounted Transformer, etc.).

11.2.9 Specifications

Provide final specifications which include all sections which apply to site/utility work.

11.2.10 Design Analysis

Design analysis shall include design calculations fully developed to support the design of the site and utility systems included in this submittal.

11.2.11 Geotechnical

Geotechnical report prepared by the Contractor’s consulting geotechnical engineer. Geotechnical information must be provided to support all assumptions and design parameters utilized in the presented site/utility design as applicable.

11.3 The final design submittal shall contain as a minimum, the following:

11.3.1 General

A complete set of construction documents, plans and specifications at the same level of detail as if the project were to be bid including a complete list of equipment, fixtures and materials to be used. The final drawings are an extension of the reviewed 60% drawings and are to include the 60% comments and responses. All details shall be shown on the drawings.

11.3.2 The design analysis is an extension of the reviewed 60% design analysis and supports and verifies that the design complies with the requirements of the project.

11.3.3 Submit marked up specifications. The specifications shall be coordinated with the drawings and shall describe in detail all items shown on the drawings.

11.3.4 Landscape, Planting and Turfing

11.3.4.1 The landscape planting design narrative shall describe the analysis of existing site conditions, including an indication of existing plant materials that are to remain on the site. The statement of concept shall indicate specific site problems related to proposed development and the rationale for proposed plant locations. The narrative shall also include a list of suggested types and sizes of plant materials which are to be used, based upon the designated functional and visual criteria.

11.3.4.2 An overall planting layout shall be developed and shall include enlarged detail plans of specific areas, as needed, to clarify requirements. The proposed layout shall indicate shade trees, evergreen trees, flowering trees, shrub masses, specific design requirements, etc., according to designated functional and visual locations of planting. A legend which also indicates sizes of plants recommended for each of the above categories shall be included. The drawings and all subsequent plans shall indicate existing and proposed buildings, paved areas, signs, light standards, transformers, dumpster areas, storm drainage system, and other structures and utilities.

11.3.4.3 Final design drawing(s) shall include a complete schedule of plant materials which indicates their botanical and common names, plan symbols, quantities, sizes, condition furnished, and pertinent remarks. Scale of drawing shall be prepared at 1" = 30'. Drawing shall correspond with the site layout and grading plans and reference coordinates, north arrows, graphic scales and appropriate legends. An overall planting layout shall be developed and shall include enlarged detail plans of specific areas as needed, to clarify requirements. Final design drawings, indicating proposed plants by a (+) mark for the plant location and a circle which is scaled at approximately 2/3 the ultimate growth spread (diameter) of plants, shall also include a complete schedule of plant materials which indicates botanical and common names, plan symbols, quantities, sizes, condition furnished, and pertinent remarks. Final drawings shall also include the basic details for installation of tree, shrub, and ground cover planting, as well as any other applicable details for clarification of specific project requirements.

11.3.5 Architectural

11.3.5.1 All architectural drawings shall be coordinated with the other engineering disciplines. Ensure that the plans are in compliance with the applicable codes. It will be the Contractor’s responsibility to implement the comments generated from any design review submittal as well as verify the consistency between plans and specification. The evaluation of the Contractor’s submittals shall be based on degree to which the submittal meet the requirements set forth in this document and the specifications.

11.3.5.2 Design narrative shall provide a summary of functional space relationships, as well as circulation. There shall also be a general statement for the rationale behind the major design decisions.

11.3.5.3 Architectural Floor Plans shall indicate dimensions, columns lines, and detail references. Toilets and other specialized areas shall be drawn to 1/4" scale and shall show any needed interior features.

11.3.5.4 Finish schedule shall indicate material, finishes, colors and any special interior design features such as soffits, fascias, and lighting troughs, etc.

11.3.5.5 All required equipment shall be shown on the drawings with an equipment list.

11.3.5.6 List any special graphics requirements that will be provided.

11.3.5.7 Schedules shall be provided for both doors and windows. These schedules shall indicate sizes, types, and details for all items shown on floor plans.

11.3.5.8 Hardware sets using BHMA designations.

11.3.5.9 Prewired Workstation Composite Floor Plans

Prewired workstation typicals – elevations and component inventory. Prewired workstation panel identification plan with electrical outlet placement including base feed.

11.3.5.10 SID package.

11.3.5.11 Fire Protection and Life Safety Analysis. This analysis must be performed by a Registered Fire Protection Engineer (FPE). NICET certification is not sufficient to address this requirement.

11.3.6 Structural Systems

11.3.6.1 State the live loads to be used for design. Include roof and floor loads; wind loads, lateral earth pressure loads, seismic loads, etc., as applicable.

11.3.6.2 Describe the method of providing lateral stability for the structural system to meet seismic and wind load requirements. Include sufficient calculations to verify the adequacy of the method.

11.3.6.3 Furnish, complete, checked calculations for all principal roof, floor, and foundation members.

11.3.6.4 This submittal shall include drawings showing roof and floor framing plans as applicable. Principal members will be shown on the plans. A foundation plan shall also be furnished showing main footings and grade beams where applicable. Where beam, column, and footing schedules are used, show schedules and fill in sufficient items to indicate method to be used. Show typical bar bending diagram if applicable. Typical sections shall be furnished for roof, floor, and foundation conditions. Structural drawings for proposals and submittals shall be separate from architectural drawings.

11.3.6.5 Provide any computer analyses used. The software shall be widely accepted, commercially available programs and complete documentation of the input and output of the program must be provided.

11.3.6.6 Provide complete seismic analyses for all building structural components. Seismic calculations shall clearly demonstrate compliance with all requirements set forth in the Statement of Work.

11.3.6.7 Structural drawings shall be coordinated with all other design disciplines.

11.3.6.8 The final structural drawings shall contain the following information as set of general notes:

The allowable soil bearing value.
The design stresses of structural materials used.
The design live loads used in the design of various portions of the structure.
The design wind speed.
The seismic values used in design.

11.3.6.9 All structural drawings and calculations shall be checked and stamped by the designer of record (a registered Professional Engineer).

11.3.7 Plumbing Systems

11.3.7.1 List all references used in the design including Government design documents and industry standards.

11.3.7.2 Provide justification and brief description of the types of plumbing fixtures, piping materials and equipment proposed for use.

11.3.7.3 Prepare detail calculations for systems such as sizing of domestic hot water heater and piping; natural gas piping; [lp gas piping and tanks] [fuel oil piping and tanks].

11.3.7.4. Indicate locations and general arrangement of plumbing fixtures and major equipment.

11.3.7.5 Include plan and isometric riser diagrams of all areas including hot water, cold water, waste and vent piping. Piping layouts and risers should also include natural gas (and meter as required), [LP gas], [fuel oil] and other specialty systems as applicable.

11.3.7.6 Include equipment and fixture connection schedules with descriptions, capacities, locations, connection sizes and other information as required.

11.3.8 Fire Protection/Suppression

11.3.8.1 List all references used in the design including Government design documents and industry standards used to generate the fire protection analysis.

11.3.8.2 Classify each building in accordance with fire zone, building floor areas and height and number of stories. This information shall be contained in the fire protection analysis.

11.3.8.3 Discuss and provide description of required fire protection requirements including extinguishing equipment, detection equipment, alarm equipment [and water supply]. Alarm and detection equipment shall interface to requirements of electronic systems. This information shall be contained in the fire protection design analysis.

11.3.8.4 Prepare a plan for each floor of each building that presents a compendium of the total fire protection features being incorporated into the design. Provide the following types of information:

The location and rating of any fire-resistive construction such as occupancy separations, area separations, exterior walls, shaft enclosures, corridors, stair enclosures, exit passageways, etc.

The location and coverage of any fire detection systems.

The location and coverage of any fire suppression systems (sprinkler risers, standpipes, etc.).

The location of any other major fire protection equipment.

Indicate any hazardous areas and their classification.

11.3.8.5 Prepare a schedule describing the internal systems with the following information: fire hazard and occupancy classifications, building construction type, GPM/square foot sprinkler density, area of operation and other as required.

11.3.8.6 Hydraulic calculations based on water flow test shall be prepared for each sprinkler system to insure that flow and pressure requirements can be met with current water supply. Include copies of Contractor water flow testing done to certify the available water source.

11.3.9 Specific Electrical Requirements

Submittal shall be in accordance with the Savannah District Design Manual for Military Construction.

11.3.9.1 Required Plans, Diagrams, Schedules, and Details on Unit Electrical Drawings:

11.3.9.1.1 Electrical Floor Plan

The floor plans shall show all principle architectural features of the building which will affect the electrical design. The floor plan shall also show the following:

Room designations.
Electrical legend and applicable notes.
Lighting fixtures, properly identified.
Location of all fire alarm devices.
Location of telephone and cable TV outlets.
Switches for control of lighting.
Receptacles.

Location and designation of panel boards. Plans should clearly indicated type of mounting required (flush or surface) and be reflected accordingly in specifications.

Service entrance (conduit and main disconnect).

Location, designation and rating of motors and/or equipment which requires electrical services. Show method of termination and/or connection to motors and/or equipment. Show necessary junction boxes, disconnects, controllers (approximate only), conduit stubs, and receptacles required to serve the motor and/or equipment.

11.3.9.1.2 Building Riser Diagram (from pad-mounted transformer to unit load center panelboard)

Indicate the types and sizes of electrical equipment and wiring. Include grounding and metering requirements.

11.3.9.1.3 Lighting Fixture Schedule (Schedule shall indicated the following information:)

Fixture Designation.
General Fixture Description.
Number and Type of Lamp(s).
Type of Mounting.
Special Features.

11.3.9.1.4 Details

Construction details, sections, elevations, etc., shall be provided where required for clarification of methods and materials of design.

11.3.9.2 Low Voltage Systems

Electronic Systems responsibilities include the following:

Fire Detection and Alarm System
Fire Suppression System Control
Telephone System
Cable Television System
Special Grounding System
Cathodic Protection
Intrusion Detection, Card Access System

11.3.9.2.1 The design analysis shall include all calculations required to support design decisions and estimate at this stage of design. The analysis shall include specific criteria furnished, conference minutes and cost analysis of all systems considered.

11.3.9.2.2 Design of the fire alarm and detection system shall include layout drawings for all devices and a riser diagram showing the control panel, enunciator panel, all zones, radio transmitter and interfaces to other systems (HVAC, sprinkler, etc.).

11.3.9.2.3 Specify all components of the fire suppression (FS) system in the FS section of the specifications. Provide a clear description of how the system will operate and interact with other systems such as the fire alarm system. Include a riser diagram on the drawings showing principal components and interconnections with other systems. Include FS system components on drawing legend. All components shown of floor plans shall be designated as FS system components (as opposed to Fire Alarm components). Show the location of FS control panels, HVAC control devices, sensors, and 120V power panel connections on the floor plans. Indicate zoning of areas by numbers (1, 2, 3) and detectors subzoned for cross zoning by letter designations (A and B). Differentiate between ceiling mounted and underfloor detectors with distinct symbols and indicate sub zone of each.

11.3.9.2.4 Show location of telephone outlets (including pay phones) on the plans. Include legend and symbol definition to indicate height above finished floor. Show Telephone Conduit System Riser Diagram. Size conduit on Riser Diagram. Do not show conduit runs between backboard and outlets on the floor plans. Underground telephone distribution conduit shall be shown on either the electrical or electronic site plan.

11.3.9.2.5 Grounding System

The specifications and drawings shall completely reflect all of the design requirements. The specifications shall require field tests (in the construction phase), witnessed by the Contracting Officer, to determine the effectiveness of the grounding system. The design shall include drawings showing existing construction. Verification of the validity of any existing drawings and/or any other data furnished by the Government shall be the responsibility of the engineering services firm.

11.3.9.2.6 Provide a statement describing the extent of any exterior work such as telephone lines, cable television (TV) distribution cables, duct banks, etc., outside of 5 feet from the building line.

11.3.9.2.7 Provide the name of the licensed corrosion engineer or NACE specialist. Provide the following for cathodic protection systems:

Clearly define areas of structures or components in soil or water to be protected.

Type system recommended, comparison of systems, cost estimates showing all equipment alternatives.

Calculations on all systems that are considered showing all information and descriptions.

11.3.9.2.7.1 Design of Cathodic Protection

The design shall clearly provide a thorough and comprehensive specification and drawing. The design plans and specifications shall show extent of the facilities to be protected, location and type of anodes, location of test points, details for sectionalizing an underground piping system. This design shall be complete enough to purchase equipment and build without design changes to meet criteria of protection.

11.3.9.2.8 Exterior work to be shown on electrical site plan.

Existing and new communications service lines, both overhead and underground, shall be properly identified.

Show removals and relocations, if any.

11.3.9.2.9 Provide a descriptive narrative of all low voltage systems that are required for project. Define any hazardous areas (as defined in the National Electric Code) and indicate the type of equipment proposed for use in such areas. Show the location of all electronic system panels, etc., on the floor plans. Show the proposed riser diagrams for all systems. Show sizes of all conduit, wires, cables, panels, etc. Provide a complete symbol legend for all devices or equipment shown on the plans. For work requiring removals or demolition, the designer shall show by use of drawings or narrative, how demolition work is to be done.

11.3.9.3 Required Electrical Design Analysis

Design analysis and calculations for the electrical systems shall be prepared by a licensed professional engineer and shall be stamped as such. The design analysis shall be separately bound, in one or more volumes. Show functional and engineering criteria, design information, and calculations applicable to the project. The analysis shall be organized in a format appropriate for review, approval, and record purposes. The design calculations shall indicate

methods and references identified, and shall explain assumptions and conclusions.

11.3.9.3.1 Voltage Drop (VD) and Short Circuit Calculations

Select conductor sizes of primary feeders, site lighting circuits, service laterals, and unit feeder conductors. Calculate maximum length for each phase of each primary circuit, using a maximum allowable VD for each circuit. Calculate voltage drops for each conductor. Maximum allowable voltage drop for site lighting and service laterals is 3%. The combined voltage drop for the service laterals, unit feeders, and branch circuit cannot exceed 5%. Calculate the available fault current at the main breaker and show A.I.C. rating calculations for all circuit breakers. Provide a coordination study to support breaker selection.

11.3.10 Specific Mechanical and Plumbing Requirements

11.3.10.1 Submittal shall be in accordance with the Savannah District Design Manual for Military Construction.

11.3.10.1.1 Mechanical Floor Plan

The floor plans shall show all principle architectural features of the building which will affect the mechanical design. The floor plans shall also show the following:

Room designations.
Mechanical legend and applicable notes.
Location of all ductwork or piping (double line ductwork required).
Location and capacity of all terminal units (i.e., registers, diffusers, grilles, hydronic baseboards).
Exhaust fan and range hood location.
Size of all ductwork and piping.
Thermostat location.
Location of heating/cooling plant (i.e., boiler, chiller, cooling tower, etc).
Location of all air handling equipment.
Return air paths (i.e., undercut doors, transfer grilles).
Flue piping size and location.
Piping diagram for forced hot water system (if used).
Fuel supply and return piping.

11.3.10.1.2. Equipment Schedule

Complete equipment schedules shall be provided. Schedule shall also include:

Capacity
Electrical characteristics
Efficiency (if applicable)
Manufacturer's name
Optional features to be provided
Physical size

11.3.10.1.3 Details: Construction details, sections, elevations, etc. shall be provided where required for clarification of methods and materials of design. Roof and exterior wall penetrations shall be detailed on the drawings.

11.3.10.2 Plumbing Floor Plan: The floor plan shall show all principal architectural features of the building which will affect the plumbing design. Separate plumbing plans will not be required if sufficient information can be shown on the mechanical plans to meet the requirements shown above. The floor plan shall also show the following:

Room designations.
Fixture Schedule.
Location of utility entrances.
Waste and water pipe location and size.
Fixture designations.

11.3.10.3 Design Analysis

Complete design calculations for mechanical systems. Include computations for sizing PM&E equipment, air duct design, HVAC pipe design, ventilation design, ASHRAE 90.1 compliance, and U-factors for ceilings, roofs and exterior walls and floors. Contractor shall employ commercially available energy analysis techniques to determine the energy performance of all passive systems and features. Use of hourly energy load computer simulation (e.g., TRNSYS, DOE 2.1 Blast, TRACE, HAP 4.10, etc.) is required. These calculations can be used to size the mechanical systems. Based on the results of calculations, provide a complete list of the materials and equipment proposed for heating and plumbing, with the manufacturer's published cataloged product installation specifications and roughing-in data. The heating and cooling equipment data shall include the manufacturer's wiring diagrams, installation specifications, ARI certification, and the standard warranty for the equipment.

11.3.11 Specifications

Provide final specifications. The Contractor shall make final identification of all materials and finishes at this stage.

11.4 Not Used.

11.5 The Corrected Final Design Complete Submittal shall contain as a minimum, the following:

11.5.1 Design Drawings

Drawings shall be 100% complete, signed and sealed by the designer of record. All previous review comments shall be incorporated.

11.5.2 Design Analysis

Complete design analysis for all design disciplines. The final Fire Protection and Life Safety Analysis shall be included in the Design Analysis.

11.5.3 Comment Response Package

Complete package showing all comments from all previous reviews and the respective response and disposition.

11.5.4 This submittal shall include all drawings and design information from the 100% site/utility submittal to form a complete design package.

12. DESIGN RELATED PRODUCTS

12. Not used

12.2 DD Form 1354

Three sets of DD Form 1354, Transfer and Acceptance of Military Real Property shall be prepared in accordance with DA Pamphlet 415-28 available at http://www.usapa.army.mil/gils/ and submitted to the Contracting Officer. The DD Form 1354 will require input from both the design agent and the Contractor. The form must be completed in English units.

At the conclusion of the project, the Contractor will compile and furnish to the Contracting Officer all costs and quantity data of materials and systems furnished and installed. A list of items for which the costs and quantity data is required will be furnished to the Contractor. Such information will be returned to the Contracting Officer within 10 days from receipt of the list.

12.3 Submittal Register, ENG FORM 4288

The Contractor shall complete and submit three copies of a "preliminary" Eng Form 4288, Submittal Register to Contracting Officer. The "preliminary" Eng Form 4288, Submittal Register shall have the column "Submittal Identification", "Specification Paragraph Number", "Description of Submittal" "Type of Submittal", and "Remarks" completed; the Contractor shall identify whether the submittal is for "Government Approval" or for "Government Information" under the column "Remarks." The "final" Eng Form 4288, Submittal Register, shall be in accordance with paragraph Submittal Register in this section.

12.4 Reproduction

Upon Government approval of corrected final design documents, the Contractor will re-submit any documents (specs, design analysis, drawings set, etc) requiring further correction along with revised CD(s) in the same quantities as the Corrected Final requirements. These documents will be marked “Corrected Final – Rev 1.” This process will continue until all documents are correct.

13. PAYMENT DURING DESIGN

Payments, as authorized by the Authorized Representative of the Contracting Officer (COR), will be made monthly for the amount and value of the work and services performed by the Contractor. This estimate will be verified by the Contracting Officer utilizing the progress charts or the CONTRACTOR-PREPARED NETWORK ANALYSIS SYSTEM submitted by the Contractor and independent analyses of progress. See Contract Clause entitled PAYMENTS UNDER FIXED-PRICE CONSTRUCTION CONTRACTS for additional information.

-- END OF SECTION --

SECTION 01312

QUALITY CONTROL SYSTEM (QCS)
08/01

1.1 GENERAL

The Government will use the Resident Management System for Windows (RMS) to assist in its monitoring and administration of this contract. The Contractor shall use the Government-furnished Construction Contractor Module of RMS, referred to as QCS, to record, maintain, and submit various information throughout the contract period. This joint Government-Contractor use of RMS and QCS will facilitate electronic exchange of information and overall management of the contract. QCS provides the means for the Contractor to input, track, and electronically share information with the Government in the following areas:

Administration
Finances
Quality Control
Submittal Monitoring
Scheduling
Import/Export of Data

1.1.1 Correspondence and Electronic Communications

For ease and speed of communications, both Government and Contractor will, to the maximum extent feasible, exchange correspondence and other documents in electronic format. Correspondence, pay requests and other documents comprising the official contract record shall also be provided in paper format, with signatures and dates where necessary. Paper documents will govern, in the event of discrepancy with the electronic version.

1.1.2 Other Factors

Particular attention is directed to Contract Clause, "Schedules for Construction Contracts", Contract Clause, "Payments", Section 01320A, PROJECT SCHEDULE, Section 01330, SUBMITTAL PROCEDURES, and Section 01451A, CONTRACTOR QUALITY CONTROL, which have a direct relationship to the reporting to be accomplished through QCS. Also, there is no separate payment for establishing and maintaining the QCS database; all costs associated therewith shall be included in the contract pricing for the work.

1.2 QCS SOFTWARE

QCS is a Windows-based program that can be run on a stand-alone personal computer or on a network. The Government will make available the QCS software to the Contractor after award of the construction contract. Prior to the Pre-Construction Conference, the Contractor shall be responsible to download, install and use the latest version of the QCS software from the Government's RMS Internet Website. Upon specific justification and request by the Contractor, the Government can provide QCS on (3-1/2 inch) high-density diskettes or CD-ROM. Any program updates of QCS will be made available to the Contractor via the Government RMS Website as they become available.

1.3 SYSTEM REQUIREMENTS

The following listed hardware and software is the minimum system configuration that the Contractor shall have to run QCS:

Hardware

IBM-compatible PC with 200 MHz Pentium or higher processor

32+ MB RAM

4 GB hard drive disk space for sole use by the QCS system

3 1/2 inch high-density floppy drive

Compact disk (CD) Reader

Color monitor

Laser printer compatible with HP LaserJet III or better, with minimum 4 MB installed memory.

Connection to the Internet, minimum 28 BPS

Software

MS Windows 95 or newer version operating system (MS Windows NT 4.0 or newer is recommended)

Word Processing software compatible with MS Word 97 or newer

Internet browser

The Contractor's computer system shall be protected by virus protection software that is regularly upgraded with all issued manufacturer's updates throughout the life of the contract.

Electronic mail (E-mail) compatible with MS Outlook

1.4 RELATED INFORMATION

1.4.1 QCS User Guide

After contract award, the Contractor shall download instructions for the installation and use of QCS from the Government RMS Internet Website; the Contractor can obtain the current address from the Government. In case of justifiable difficulties, the Government will provide the Contractor with a CD-ROM containing these instructions.

1.4.2 Contractor Quality Control(CQC) Training

The use of QCS will be discussed with the Contractor's QC System Manager during the mandatory CQC Training class.

1.5 CONTRACT DATABASE

Prior to the pre-construction conference, the Government shall provide the Contractor with basic contract award data to use for QCS. The Government will provide data updates to the Contractor as needed, generally by files attached to E-mail. These updates will generally consist of submittal reviews, correspondence status, QA comments, and other administrative and QA data.

1.6 DATABASE MAINTENANCE

The Contractor shall establish, maintain, and update data for the contract in the QCS database throughout the duration of the contract. The Contractor shall establish and maintain the QCS database at the Contractor's site office. Data updates to the Government shall be submitted by E-mail with file attachments, e.g., daily reports, schedule updates, payment requests. If permitted by the Contracting Officer, a data diskette or CD-ROM may be used instead of E-mail (see Paragraph DATA SUBMISSION VIA COMPUTER DISKETTE OR CD-ROM). The QCS database typically shall include current data on the following items:

1.6.1 Administration

1.6.1.1 Contractor Information

The database shall contain the Contractor's name, address, telephone numbers, management staff, and other required items. Within 14 calendar days of receipt of QCS software from the Government, the Contractor shall deliver Contractor administrative data in electronic format via E-mail.

1.6.1.2 Subcontractor Information

The database shall contain the name, trade, address, phone numbers, and other required information for all subcontractors. A subcontractor must be listed separately for each trade to be performed. Each subcontractor/trade shall be assigned a unique Responsibility Code, provided in QCS. Within 14 calendar days of receipt of QCS software from the Government, the Contractor shall deliver subcontractor administrative data in electronic format via E-mail.

1.6.1.3 Correspondence

All Contractor correspondence to the Government shall be identified with a serial number. Correspondence initiated by the Contractor's site office shall be prefixed with "S". Letters initiated by the Contractor's home (main) office shall be prefixed with "H". Letters shall be numbered starting from 0001. (e.g., H-0001 or S-0001). The Government's letters to the Contractor will be prefixed with "C".

1.6.1.4 Equipment

The Contractor's QCS database shall contain a current list of equipment planned for use or being used on the jobsite, including the most recent and planned equipment inspection dates.

1.6.1.5 Management Reporting

QCS includes a number of reports that Contractor management can use to track the status of the project. The value of these reports is reflective of the

quality of the data input, and is maintained in the various sections of QCS. Among these reports are: Progress Payment Request worksheet, QA/QC comments, Submittal Register Status, Three-Phase Inspection checklists.

1.6.2 Finances

1.6.2.1 Pay Activity Data

The QCS database shall include a list of pay activities that the Contractor shall develop in conjunction with the construction schedule. The sum of all pay activities shall be equal to the total contract amount, including modifications. Pay activities shall be grouped by Contract Line Item Number (CLIN), and the sum of the activities shall equal the amount of each CLIN. The total of all CLINs equals the Contract Amount.

1.6.2.2 Payment Requests

All progress payment requests shall be prepared using QCS. The Contractor shall complete the payment request worksheet and include it with the payment request. The work completed under the contract, measured as percent or as specific quantities, shall be updated at least monthly. After the update, the Contractor shall generate a payment request report using QCS. The Contractor shall submit the payment requests with supporting data by E-mail with file attachment(s). If permitted by the Contracting Officer, a data diskette may be used instead of E-mail. A signed paper copy of the approved payment request is also required, which shall govern in the event of discrepancy with the electronic version.

1.6.3 Quality Control (QC)

QCS provides a means to track implementation of the 3-phase QC Control System, prepare daily reports, identify and track deficiencies, document progress of work, and support other contractor QC requirements. The Contractor shall maintain this data on a daily basis. Entered data will automatically output to the QCS generated daily report. The Contractor shall provide the Government a Contractor Quality Control (CQC) Plan within the time required in Section 01451A, CONTRACTOR QUALITY CONTROL. Within seven calendar days of Government acceptance, the Contractor shall submit a data diskette or CD-ROM reflecting the information contained in the accepted CQC Plan: schedule, pay activities, features of work, submittal register, QC requirements, and equipment list.

1.6.3.1 Daily Contractor Quality Control (CQC) Reports.

QCS includes the means to produce the Daily CQC Report. The Contractor may use other formats to record basic QC data. However, the Daily CQC Report generated by QCS shall be the Contractor's official report. Data from any supplemental reports by the Contractor shall be summarized and consolidated onto the QCS-generated Daily CQC Report. Daily CQC Reports shall be submitted as required by Section 01451A, CONTRACTOR QUALITY CONTROL. Reports shall be submitted electronically to the Government using E-mail or diskette within 24 hours after the date covered by the report. Use of either mode of submittal shall be coordinated with the Government representative. The Contractor shall also provide the Government a signed, printed copy of the daily CQC report.

1.6.3.2 Deficiency Tracking.

The Contractor shall use QCS to track deficiencies. Deficiencies identified by the Contractor will be numerically tracked using QC punch list items. The Contractor shall maintain a current log of its QC punch list items in the QCS database. The Government will log the deficiencies it has identified using its QA punch list items. The Government's QA punch list items will be included in its export file to the Contractor. The Contractor shall regularly update the correction status of both QC and QA punch list items.

1.6.3.3 Three-Phase Control Meetings

The Contractor shall maintain scheduled and actual dates and times of preparatory and initial control meetings in QCS.

1.6.3.4 Accident/Safety Tracking.

The Government will issue safety comments, directions, or guidance whenever safety deficiencies are observed. The Government's safety comments will be included in its export file to the Contractor. The Contractor shall regularly update the correction status of the safety comments. In addition, the Contractor shall utilize QCS to advise the Government of any accidents occurring on the jobsite. This brief supplemental entry is not to be considered as a substitute for completion of mandatory reports, e.g., ENG Form 3394 and OSHA Form 200.

1.6.3.5 Features of Work

The Contractor shall include a complete list of the features of work in the QCS database. A feature of work may be associated with multiple pay activities. However, each pay activity (see subparagraph "Pay Activity Data" of paragraph "Finances") will only be linked to a single feature of work.

1.6.3.6 QC Requirements

The Contractor shall develop and maintain a complete list of QC testing, transferred and installed property, and user training requirements in QCS. The Contractor shall update all data on these QC requirements as work progresses, and shall promptly provide this information to the Government via QCS.

1.6.4 Submittal Management

The Government will provide the initial submittal register form format in electronic form, the contractor will prepare submittal register. Thereafter, the Contractor shall maintain a complete list of all submittals, including completion of all data columns. Dates on which submittals are received and returned by the Government will be included in its export file to the Contractor. The Contractor shall use QCS to track and transmit all submittals. ENG Form 4025, submittal transmittal form, and the submittal register update, ENG Form 4288, shall be produced using QCS. RMS will be used to update, store and exchange submittal registers and transmittals, but will not be used for storage of actual submittals.

1.6.5 Schedule

The Contractor shall develop a construction schedule consisting of pay activities, in accordance with Contract Clause "Schedules for Construction Contracts", or CONTRACTOR PREPARED NETWORK ANALYSIS SYSTEM (NAS) – PROJECT SCHEDULE, as applicable. This schedule shall be input and maintained in the QCS database either manually or by using the Standard Data Exchange Format (SDEF). (See CONTRACTOR PREPARED NETWORK ANALYSIS SYSTEM (NAS) – PROJECT SCHEDULE.) The updated schedule data shall be included with each pay request submitted by the Contractor.

1.6.6 Import/Export of Data

QCS includes the ability to export Contractor data to the Government and to import submittal register and other Government-provided data, and schedule data using SDEF.

1.7 IMPLEMENTATION

Contractor use of QCS as described in the preceding paragraphs is mandatory. The Contractor shall ensure that sufficient resources are available to maintain its QCS database, and to provide the Government with regular database updates. QCS shall be an integral part of the Contractor's management of quality control.

1.8 DATA SUBMISSION VIA COMPUTER DISKETTE OR CD-ROM

The Government-preferred method for Contractor's submission of updates, payment requests, correspondence and other data is by E-mail with file attachment(s). For locations where this is not feasible, the Contracting Officer may permit use of computer diskettes or CD-ROM for data transfer. Data on the disks or CDs shall be exported using the QCS built-in export function. If used, diskettes and CD-ROMs will be submitted in accordance with the following:

1.8.1 File Medium

The Contractor shall submit required data on 3-1/2 inch double-sided high-density diskettes formatted to hold 1.44 MB of data, capable of running under Microsoft Windows 95 or newer. Alternatively, CD-ROMs may be used. They shall conform to industry standards used in the United States. All data shall be provided in English.

1.8.2 Disk or CD-ROM Labels

The Contractor shall affix a permanent exterior label to each diskette and CD-ROM submitted. The label shall indicate in English, the QCS file name, full contract number, contract name, project location, data date, name and telephone number of person responsible for the data.

1.8.3 File Names

The Government will provide the file names to be used by the Contractor with the QCS software.

1.9 MONTHLY COORDINATION MEETING

The Contractor shall update the QCS database each workday. At least monthly, the Contractor shall generate and submit an export file to the Government with schedule update and progress payment request. As required in Contract Clause "Payments", at least one week prior to submittal, the Contractor shall meet with the Government representative to review the planned progress payment data submission for errors and omissions. The Contractor shall make all required corrections prior to Government acceptance of the export file and progress payment request. Payment requests accompanied by incomplete or incorrect data submittals will be returned. The Government will not process progress payments until an acceptable QCS export file is received.

1.10 NOTIFICATION OF NONCOMPLIANCE

The Contracting Officer will notify the Contractor of any detected noncompliance with the requirements of this specification. The Contractor shall take immediate corrective action after receipt of such notice. Such notice, when delivered to the Contractor at the work site, shall be deemed sufficient for the purpose of notification.

-- End of Section --

SECTION 01320A

PROJECT SCHEDULE
05/02

PART 1 GENERAL

1.1 REFERENCES

The publications listed below form a part of the specification to the extent referenced. The publications are referenced in the text by basic designation only.

U.S. ARMY CORPS OF ENGINEERS (USACE)

ER 1-1-11	(1995) Progress, Schedules, and Network Analysis Systems

1.2 QUALIFICATIONS

The Contractor shall designate an authorized representative, the individual tasked with the responsibility for preparation-updating-revision of the NAS schedule, who shall be responsible for the preparation and submittal of the entire NAS project schedule, including all items specified below, and revisions to the schedule or supplemental completion schedules, as applicable or directed by the Contracting Officer. The scheduling representative shall be approved by the Contracting Officer based on a resume indicating, as a minimum, formal training from a software vendor or 5 years experience in working with NAS schedules.

PART 2 PRODUCTS (NOT APPLICABLE)

PART 3 EXECUTION

3.1 GENERAL REQUIREMENTS

Pursuant to the Contract Clause, SCHEDULE FOR CONSTRUCTION CONTRACTS, a Project Schedule as described below shall be prepared. The scheduling of design and construction shall be the responsibility of the Contractor. Contractor management personnel shall actively participate in its development. Subcontractors and suppliers working on the project shall also contribute in developing and maintaining an accurate Project Schedule. The approved Project Schedule shall be used to measure the progress of the work, to evaluate impacts and time extensions, and to provide the basis of all progress payments.

3.2 BASIS FOR PAYMENT

The schedule shall be the basis for measuring Contractor progress. Lack of an approved schedule or scheduling personnel will result in an inability of the Contracting Officer to evaluate the Contractor's progress for the purposes of payment. Failure of the Contractor to provide all information, as specified below, shall result in the disapproval of the entire Project Schedule submission and the inability of the Contracting Officer to evaluate Contractor progress for payment purposes. In the case where Project Schedule revisions have been directed by the Contracting Officer and those

revisions have not been included in the Project Schedule, the Contracting Officer may hold retainage up to the maximum allowed by Contract, each payment period, until revisions to the Project Schedule have been made.

3.3 PROJECT SCHEDULE

The computer software system utilized by the Contractor to produce the Project Schedule shall be capable of providing all requirements of this specification. Failure of the Contractor to meet the requirements of this specification shall result in the disapproval of the schedule. Manual methods used to produce any required information shall require approval by the Contracting Officer. The Contracting Officer intends to use PRIMAVERA P3. Should the Contractor utilize software that is different than that utilized by the Contracting Officer, the Contractor shall provide a copy of the software and a license to the Contracting Officer until final payment. The software and license will be returned to the Contractor. The Contractor shall submit a copy of the user's manual outlining the selected CPM computer program's mathematical analysis capabilities, details, functions and operation. The Contractor shall provide to the Government a complete input listing for the initial schedule. The selected software must be able to function so as to provide all information and functions required by this specification in an accessible manner acceptable to the Contracting Officer. The Government’s acceptance of the software does not waive any requirements under this specification and shall not require the Government to go to any significant effort to retrieve the required information.

3.3.1 Use of the Critical Path Method

The Critical Path Method (CPM) of network calculation shall be used to generate the Project Schedule. The Contractor shall provide the Project Schedule in the Precedence Diagram Method (PDM).

3.3.2 Level of Detail Required

The Project Schedule shall include an appropriate level of detail. Failure to develop or update the Project Schedule or provide data to the Contracting Officer at the appropriate level of detail, as specified by the Contracting Officer, shall result in the disapproval of the schedule. The Contracting Officer will use, but is not limited to, the following conditions to determine the appropriate level of detail to be used in the Project Schedule:

3.3.2.1 Activity Durations

Contractor submissions shall follow the direction of the Contracting Officer regarding reasonable activity durations. Reasonable durations are those that allow the progress of activities to be accurately determined between payment periods (usually less than 2 percent of all non-procurement activities' Original Durations are greater than 20 days). Work activity durations shall be indicated in work days. Non-work activity durations may be in calendar days.

3.3.2.2 Design and Permit Activities

Design and permitting activities, including necessary conferences and follow up actions and Design package submission dates, shall be integrated into the schedule.

3.3.2.3 Procurement Activities

Tasks related to the procurement of long lead materials or equipment shall be included as separate activities in the Project Schedule. Long lead materials and equipment are those materials that have a procurement cycle of over 90 days. Examples of procurement process activities include, but are not limited to: submittals, approvals, procurement, fabrication, and delivery.

3.3.2.4 Critical Activities

The following activities shall be listed as separate activities on the Contractor's Project Schedule:

a. Submission and approval of mechanical/electrical layout drawings.

b. Submission and approval of O & M manuals.

c. Submission and approval of as-built drawings.

d. Submission and approval of 1354 data and installed equipment lists.

e. Submission and approval of testing and air balance (TAB).

f. Submission of TAB specialist design review report.

g. Submission and approval of fire protection specialist.

h. Controls testing plan

i. Controls testing

j. HVAC TAB.

k. HVAC commissioning dates.

l. Performance Verification testing.

m. Other systems testing (as required)

n. CQC testing of other mechanical systems (state specific systems)

o. QA checks of other mechanical systems (state specific systems).

p. CQC testing of other electrical systems (state specific systems)

q. QA checks of other electrical systems (state specific systems).

r. CQC punchlist inspection.

s. Correction of items on CQC punchlist.

t. Prefinal inspection.

u. Correction of items on prefinal punchlist.

v. Final inspection.

3.3.2.5 Government Activities

Government and other agency activities that could impact progress shall be shown. These activities include, but are not limited to: approvals, inspections, design reviews, utility tie-in, Government Furnished Equipment (GFE) and Notice to Proceed (NTP) for phasing requirements.

3.3.2.6 Responsibility

All activities shall be identified in the Project Schedule by the party responsible to perform the work. Responsibility includes, but is not limited to, the subcontracting firm, contractor work force, or Government agency performing a given task. Activities shall not belong to more than one responsible party. The responsible party for each activity shall be identified by the Responsibility Code.

3.3.2.7 Work Areas

All activities shall be identified in the Project Schedule by the work area in which the activity occurs. Activities shall not be allowed to cover more than one work area. The work area of each activity shall be identified by the Work Area Code.

3.3.2.8 Modification or Claim Number

Any activity that is added or changed by contract modification or used to justify claimed time shall be identified by a modification or claim code that changed the activity. Activities shall not belong to more than one modification or claim item. The modification or claim number of each activity shall be identified by the Mod or Claim Number. Whenever possible, changes shall be added to the schedule by adding new activities. Existing activities shall not normally be changed to reflect modifications.

3.3.2.9 Bid Item

All activities shall be identified in the Project Schedule by the Bid Item to which the activity belongs. An activity shall not contain work in more than one bid item. The bid item for each appropriate activity shall be identified by the Bid Item Code.

3.3.2.10 Phase of Work

All activities shall be identified in the Project Schedule by the phase of work in which the activity occurs. Activities shall not contain work in more than one phase of work. The project phase of each activity shall be by the unique Phase of Work Code.

3.3.2.11 Category of Work

All Activities shall be identified in the Project Schedule according to the category of work which best describes the activity. Category of work refers, but is not limited, to such items as Design, Design package submission, Design reviews, Design review conferences, Permits, submittals, approvals, procurement, fabrication, delivery, installation, start-up, and

testing. The category of work for each activity shall be identified by the Category of Work Code.

3.3.2.12 Feature of Work

All activities shall be identified in the Project Schedule according to the feature of work to which the activity belongs. Feature of work refers, but is not limited to, a work breakdown structure for the project. The feature of work for each activity shall be identified by the Feature of Work Code.

3.3.3 Scheduled Project Completion

The schedule interval shall extend from NTP to the contract completion date, unless approved by the Contracting Officer for early completion.

3.3.3.1 Project Start Date

The schedule shall start no earlier than the date on which the NTP was acknowledged. The Contractor shall include as the first activity in the Project Schedule an activity called "Start Project". The "Start Project" activity shall have an "ES" constraint date equal to the date that the NTP was acknowledged, and a zero day duration.

3.3.3.2 Constraint of Last Activity

Completion of the last activity in the schedule shall be constrained by the contract completion date. Calculation on project updates shall be such that if the early finish of the last activity falls after the contract completion date, then the float calculation shall reflect a negative float on the critical path. The Contractor shall include as the last activity in the Project Schedule an activity called "End Project". The "End Project" activity shall have an "LF" constraint date equal to the completion date for the project, and a zero day duration.

3.3.3.3 Early Project Completion

In the event the Project Schedule shows completion of the project prior to the contract completion date, the Contractor shall identify those activities that have been accelerated and/or those activities that are scheduled in parallel to support the Contractor's "early" completion. The Contractor shall specifically address each of the activities noted in the narrative report at every Project Schedule update period to assist the Contracting Officer in evaluating the Contractor's ability to actually complete prior to the contract period. The Contractor shall include an activity named “contingency” with no cost and a duration equal to the number of calendar days from the date all the contract work is planned to be completed to the official contract completion date as awarded.

3.3.4 Interim Completion Dates

Contractually specified interim completion dates shall also be constrained to show negative float if the early finish date of the last activity in that phase falls after the interim completion date.

3.3.4.1 Start Phase

The Contractor shall include as the first activity for a project phase an activity called "Start Phase X" where "X" refers to the phase of work. The "Start Phase X" activity shall have an "ES" constraint date equal to the date on which the NTP was acknowledged, and a zero day duration.

3.3.4.2 End Phase

The Contractor shall include as the last activity in a project phase an activity called "End Phase X" where "X" refers to the phase of work. The "End Phase X" activity shall have an "LF" constraint date equal to the completion date for the project, and a zero day duration.

3.3.4.3 Phase X

The Contractor shall include a hammock type activity for each project phase called "Phase X" where "X" refers to the phase of work. The "Phase X" activity shall be logically tied to the earliest and latest activities in the phase.

3.3.5 Default Progress Data Disallowed

Actual Start and Finish dates shall not be automatically updated by default mechanisms that may be included in CPM scheduling software systems. Actual Start and Finish dates on the CPM schedule shall match those dates provided from Contractor Quality Control Reports. Failure of the Contractor to document the Actual Start and Finish dates on the Daily Quality Control report for every in-progress or completed activity, and failure to ensure that the data contained on the Daily Quality Control reports is the sole basis for schedule updating, shall result in the disapproval of the Contractor's schedule and the inability of the Contracting Officer to evaluate Contractor progress for payment purposes. Updating of the percent complete and the remaining duration of any activity shall be independent functions. Program features which calculate one of these parameters from the other shall be disabled.

3.3.6 Out-of-Sequence Progress

Activities that have posted progress without all preceding logic being satisfied (Out-of-Sequence Progress) will be allowed only on a case-by-case approval of the Contracting Officer. The Contractor shall propose logic corrections to eliminate all out of sequence progress or justify not changing the sequencing for approval prior to submitting an updated Project Schedule.

3.3.7 Negative Lags

Lag durations contained in the Project Schedule shall not have a negative value.

3.3.8 Multiple Buildings/Facilities

The contractor shall prepare separate detailed NAS schedules for each building/facility, indicating the critical path for specified interim completion dates or critical milestone date for each. The master NAS schedule shall indicate the interface/lag/link between buildings/facilities to maximize/level the labor and other resources. The master schedule

critical path must be indicated through the various buildings/facilities and total duration equal to the contract duration.

3.3.9 Resource Loading

Activities shall be resource loaded with crew size and composition.

3.4 PROJECT SCHEDULE SUBMISSIONS

The Contractor shall provide the submissions as described below. The data disk, reports, and network diagrams required for each submission are contained in paragraph SUBMISSION REQUIREMENTS.

3.4.1 Preliminary Project Schedule Submission

The Preliminary Project Schedule, defining the Contractor's planned operations for the first 90 calendar days shall be submitted for approval within 30 calendar days after the NTP is acknowledged. The approved preliminary schedule shall be used for payment purposes not to exceed 90 calendar days after NTP.

3.4.2 Initial Project Schedule Submission

The Initial Project Schedule shall be submitted for approval within 60 calendar days after NTP. The schedule shall provide a reasonable sequence of activities which represent work through the entire project and shall be at a reasonable level of detail.

3.4.3 Periodic Schedule Updates

Based on the result of progress meetings, specified in paragraph PERIODIC PROGRESS MEETINGS, the Contractor shall submit periodic schedule updates. These submissions shall enable the Contracting Officer to assess the Contractor's progress. If the Contractor fails or refuses to furnish the information and Project Schedule data, which in the judgment of the Contracting Officer or authorized representative is necessary for verifying the Contractor's progress, the Contractor shall be deemed not to have provided an estimate upon which progress payment may be made.

3.4.4 Standard Activity Coding Dictionary

The Contractor shall use the activity coding structure defined in the Standard Data Exchange Format (SDEF) in ER 1-1-11, Appendix A. This exact structure is mandatory, even if some fields are not used.

3.5 SUBMISSION REQUIREMENTS

The following items shall be submitted by the Contractor for the preliminary submission, initial submission, and every periodic Project Schedule update throughout the life of the project:

3.5.1 Data Disks

Two data disks containing the project schedule shall be provided. Data on the disks shall adhere to the SDEF format specified in ER 1-1-11, Appendix A.

3.5.1.1 File Medium

Required data shall be submitted on 3.5 disks, formatted to hold 1.44 MB of data, under the MS-DOS Version 5. or 6.x, or on CDs. Any other medium must be approved by the Contracting Officer.

3.5.1.2 CD Label

A permanent exterior label shall be affixed to each disk or CD submitted. The label shall indicate the type of schedule (Preliminary, Initial, Update, or Change), full contract number, project name, project location, data date, and name and telephone number of the person responsible for the schedule.

3.5.1.3 File Name

Each file submitted shall have a name related to either the schedule data date, project name, or contract number. The Contractor shall develop a naming convention that will ensure that the names of the files submitted are unique. The Contractor shall submit the file naming convention to the Contracting Officer for approval.

3.5.2 Narrative Report

A Narrative Report shall be provided with the preliminary, initial, and each update of the Project Schedule. This report shall be provided as the basis of the Contractor's progress payment request. The Narrative Report shall include: a description of activities along the 2 most critical paths, a description of current and anticipated problem areas or delaying factors and their impact, and an explanation of corrective actions taken or required to be taken. The narrative report is expected to relay to the Government the Contractor's thorough analysis of the schedule output and his plans to compensate for any problems, either current or potential, which are revealed through that analysis. If the Contractor believes that any Government action or inaction has, or potentially will, impact his progress, he should include the specific notice of the fact in this report. This information should include the activity number of the impacted work, and nature and duration of the impact. The narrative report shall address all modifications and weather activities that were input for the progress and their impact on the contract completion and total float.

3.5.3 Approved Changes Verification

Only Project Schedule changes that have been previously approved by the Contracting Officer shall be included in the schedule submission. The Narrative Report shall specifically reference, on an activity by activity basis, all changes made since the previous period and relate each change to documented, approved schedule changes.

3.5.4 Schedule Reports

The format for each activity for the schedule reports listed below shall contain: Activity Number, Activity Description, Original Duration, Remaining Duration, Early Start Date, Early Finish Date, Late Start Date, Late Finish Date, and Total Float. Actual Start and Actual Finish Dates shall be printed for those activities in progress or completed.

3.5.4.1 Activity Report

A list of all activities sorted according to activity number.

3.5.4.2 Logic Report

A list of Preceding and Succeeding activities for every activity in ascending order by activity number. Preceding and succeeding activities shall include all information listed above in paragraph SCHEDULE REPORTS. A blank line shall be left between each activity groupings.

3.5.4.3 Total Float Report

A list of all incomplete activities sorted in ascending order of total float. Activities which have the same amount of total float shall be listed in ascending order of Early Start Dates. Completed activities shall not be shown on this report.

3.5.4.4 Earnings Report

A compilation of the Contractor's Total Earnings on the project from the NTP until the most recent Monthly Progress Meeting. This report shall reflect the Earnings of specific activities based on the agreements made in the field and approved between the Contractor and Contracting Officer at the most recent Monthly Progress Meeting. Provided that the Contractor has provided a complete schedule update, this report shall serve as the basis of determining Contractor payment. Activities shall be grouped by bid item and sorted by activity number. This report shall: sum all activities in a bid item and provide a bid item percent; and complete and sum all bid items to provide a total project percent complete. The printed report shall contain, for each activity: Activity Number, Activity Description, Original Budgeted Amount, Total Quantity, Quantity to Date, Percent Complete (based on cost), and Earnings to Date.

3.5.5 Network Diagram

The network diagram shall be required on the initial schedule submission and on monthly schedule update submissions. The network diagram shall depict and display the order and interdependence of activities and the sequence in which the work is to be accomplished. The Contracting Officer will use, but is not limited to, the following conditions to review compliance with this paragraph:

3.5.5.1 Continuous Flow

Diagrams shall show a continuous flow from left to right with no arrows from right to left. The activity number, description, duration, and estimated earned value shall be shown on the diagram.

3.5.5.2 Project Milestone Dates

Dates shall be shown on the diagram for start of project, any contract required interim completion dates, and contract completion date.

3.5.5.3 Critical Path

The critical path shall be clearly shown.

3.5.5.4 Banding

Activities shall be grouped to assist in the understanding of the activity sequence. Typically, this flow will group activities by category of work, work area and/or responsibility.

3.5.5.5 S-Curves

Earnings (cash flow) curves (as required for submissions) shall show scheduled ES/EF and LS/LF curves and actual progress plotted as of the data date.

3.6 PERIODIC PROGRESS MEETINGS

There will be two progress meetings each month.

First Meeting - A progress update meeting will be held on site between the Government and the authorized Contractor representatives on the agreed monthly cut-off date established at the pre-construction conference. During this meeting the Contractor shall indicate his requested percentage completed on each activity on which there was a revised percentage of completion. The Contracting Officer must approve actual progress percentages for each activity. During this meeting the Contractor shall also describe, on an activity-by-activity basis, all proposed revisions and adjustments to the project schedule required to reflect the current status of the project. The Contracting Officer will approve activity progress, proposed revisions, and adjustments, as appropriate.

Second Meeting - A progress evaluation meeting shall be held with the Contractor after the updating of the current period progress work activities percentage is complete, including modifications and adverse weather activities, to evaluate progress and the Project Schedule. The monthly updated Project Schedule should be submitted to the Contracting Officer for approval with the Contractor’s request for progress payment. The evaluation will include a review of actual durations compared to scheduled durations for critical and near-critical activities, progress on critical activities and near-critical activities, trends, current/potential problem areas, cash flow progress, and projected workflow of activities. The Contractor’s narrative report shall be available for review at least three days prior to the second progress meeting. The Contracting Officer shall approve all proposed revisions and adjustments to the Project Schedule. Update information must include the Actual Start Dates, Actual Finish Dates, Remaining Durations, and Costs-to-Date. The Contractor must address all the activities on an activity-by-activity basis during the second progress meeting. The Contractor's Project Manager and Scheduler shall attend the second regular progress meeting.

3.6.1 Update Submission Following Progress Meeting

A complete update of the project schedule containing all approved progress, revisions, and adjustments, shall be submitted not later than 6 working days after the second monthly progress meeting.

3.6.2 Additional Progress Meeting Contents

Update information, including Actual Start Dates, Actual Finish Dates, Remaining Durations, and Cost-to-Date shall be subject to the approval of the Contracting Officer. As a minimum, the Contractor shall address the following items on an activity by activity basis during each progress meeting.

3.6.2.1 Start and Finish Dates

The Actual Start and Actual Finish dates for each activity currently in-progress or completed .

3.6.2.2 Time Completion

The estimated Remaining Duration for each activity in-progress. Time-based progress calculations shall be based on Remaining Duration for each activity.

3.6.2.3 Cost Completion

The earnings for each activity started. Payment will be based on earnings for each in-progress or completed activity. Payment for individual activities will not be made for work that contains quality defects. A portion of the overall project amount may be retained based on delays of activities.

3.6.2.4 Logic Changes

All logic changes pertaining to NTP on change orders, change orders to be incorporated into the schedule, contractor proposed changes in work sequence, corrections to schedule logic for out-of-sequence progress, lag durations, and other changes that have been made pursuant to contract provisions shall be specifically identified and discussed.

3.6.2.5 Other Changes

Other changes required due to delays in completion of any activity or group of activities include: 1) delays beyond the Contractor's control, such as strikes and unusual weather. 2) delays encountered due to submittals, Government Activities, deliveries or work stoppages which make re-planning the work necessary. 3) Changes required to correct a schedule which does not represent the actual or planned prosecution and progress of the work.

3.7 REQUESTS FOR TIME EXTENSIONS

In the event the Contractor requests an extension of the contract completion date, or any interim milestone date, the Contractor shall furnish the following for a determination as to whether or not the Contractor is entitled to an extension of time under the provisions of the contract: justification, Project Schedule data, and supporting evidence, as the Contracting Officer may deem necessary. Submission of proof of delay, based on revised activity logic, duration, and costs (updated to the specific date that the delay occurred) is obligatory to any approvals.

3.7.1 Justification of Delay

The project schedule shall clearly display that the Contractor has used, in full, all the float time available for the work involved with the request.

The Contracting Officer's determination as to the number of allowable days of contract extension shall be based upon the Project Schedule update in effect for the time period in question, and other factual information. Actual delays that are found to be caused by the Contractor's own actions, which result in the extension of the Project Schedule, will not be a cause for a time extension to the contract completion date.

3.7.2 Submission Requirements

The Contractor shall submit a justification for each request for a change in the contract completion date of under 2 weeks based upon the most recent schedule update at the time of the NTP or constructive direction issued for the change. Such a request shall be in accordance with the requirements of other appropriate Contract Clauses and shall include, as a minimum:

a. A list of affected activities, with their associated project schedule activity number.

b. A brief explanation of the causes of the change, and a brief explanation as to how the specific activities are affected.

c. An analysis of the overall impact of the changes proposed.

d. A sub-network of the affected activities, integrated into the most current approved Project Schedule.

Activities impacted in each justification for change shall be identified by a unique activity code contained in the required data file.

3.7.3 Additional Submission Requirements

For any requested time extension of over 2 weeks, the Contracting Officer may request an interim update with revised activities for a specific change request. The Contractor shall provide this disk within 4 days of the Contracting Officer's request.

3.7.4 Incorporation of Time Extensions into the Project Schedule

Modifications shall be entered into the Project Schedule, utilizing the subnet/fragnet as agreed during negotiations, immediately after receipt of signed SF 30. Entries to the schedule must be approved by Contracting Officer. All modifications subnets/fragnets shall be applied to the Project Schedule immediately in the sequence in which they were finalized (received signed SF 30). Weather time extensions must be included upon receipt of the results of the monthly weather evaluation.

3.8 DIRECTED CHANGES

If the NTP is issued for changes prior to settlement of price and/or time, the Contractor shall submit proposed schedule revisions to the Contracting Officer within 2 weeks of the NTP being issued. The proposed revisions to the schedule will be approved by the Contracting Officer prior to inclusion of those changes within the Project Schedule. If the Contractor fails to submit the proposed revisions, the Contracting Officer may furnish the Contractor with suggested revisions to the Project Schedule. The Contractor shall include these revisions in the Project Schedule until revisions are submitted, and final changes and impacts have been negotiated. If the

Contractor has any objections to the revisions furnished by the Contracting Officer, the Contractor shall advise the Contracting Officer within 2 weeks of receipt of the revisions. Regardless of the objections, the Contractor shall continue to update the schedule with the Contracting Officer's revisions until a mutual agreement in the revisions is reached. If the Contractor fails to submit alternative revisions within 2 weeks of receipt of the Contracting Officer's proposed revisions, the Contractor will be deemed to have concurred with the Contracting Officer's proposed revisions. The proposed revisions will then be the basis for an equitable adjustment for performance of the work.

3.9 OWNERSHIP OF FLOAT

Float available in the Project Schedule, at any time, shall not be considered for the exclusive use of either the Government or the Contractor.

3.10 CONTRACTOR FALLS BEHIND THE APPROVED SCHEDULE

If the Contractor falls behind his approved Project Schedule (behind the LS/LF cash flow curve, or more than 15 work days of negative float), or performs the work in such a manner that the network diagram and mathematical analysis no longer indicate reasonable logic and duration for completion of the work by the current contract completion date, as determined by the Contracting Officer, the Contractor shall promptly provide a supplemental recovery or completion schedule for completion by the current completion date, by reducing the remaining durations, revising logic, or adjusting resources onsite, as approved by the Contracting Officer. The supplemental schedule shall be resource loaded with crew size and productivity for each remaining activity, and indicating overtime, weekend work, and/or double shifts needed to regain the schedule, without additional cost to the Government. The supplemental schedule shall not replace the original approved Project Schedule as the official Contract schedule. Both the original approved Project Schedule and the supplemental schedule shall be updated monthly and monitored by the Contractor and the Contracting Officer. The Contractor shall not artificially improve his progress by revising the schedule logic restraints or shortening future work activity durations. The Contractor may improve his progress by performing sequential work activities concurrently or by performing activities more quickly than planned, but such improvements shall be indicated on the supplemental schedule and shall not be recorded on the approved Project Schedule until they have actually been achieved by the Contractor. Failure of the Contractor to perform work and maintain progress in accordance with the supplemental schedule may result in an interim and final unsatisfactory performance rating, and/or may result in corrective action by the Contraction Officer, in accordance with FAR 52.236-15.

-- End of Section --

SECTION 01330
SUBMITTAL PROCEDURES
(DESIGN/BUILD)
10/2000

PART 1 GENERAL

1.1 SUBMITTAL IDENTIFICATION

Submittals required are identified by SD numbers and titles as follows:

SD-01 Preconstruction Submittals

SD-02 Shop Drawings

SD-03 Product Data

SD-04 Samples

SD-05 Design Data

SD-06 Test Reports

SD-07 Certificates

SD-08 Manufacturer's Instructions

SD-09 Manufacturer's Field Reports

SD-10 Operation and Maintenance Data

SD-11 Closeout Submittals

1.2 SUBMITTAL CLASSIFICATION

Submittals are classified as follows:

1.2.1 Designer of Record Approved.

Designer of Record approval is required for extensions of design, critical materials, any deviations from the solicitation, the accepted proposal, or the completed design, equipment whose compatibility with the entire system must be checked, and other items as designated by the Contracting Officer's Representative. Within the terms of the Contract Clause entitled "Specifications and Drawings for Construction", they are considered to be "shop drawings". The Contractor shall provide the Government the number of copies designated hereinafter of all Designer of Record approved submittals. The Government may review any or all Designer of Record approved submittals for conformance to the Solicitation and Accepted Proposal. The Government will review all submittals designated as deviating from the Solicitation or Accepted Proposal, as described below.

1.2.2 Government Approved Construction Submittals.

Administrative Contracting Officer approval is required for any deviations from the Solicitation or Accepted Proposal and other items as designated by the Contracting Officer' Representative. Within the terms of the Contract Clause entitled "Specifications and Drawings for Construction", they are considered to be "shop drawings".

1.2.3 Government Reviewed Extension of Design.

Government review is required for extension of design construction submittals, used to define contract conformity, and for deviation from the completed design. Review will be only for conformance with the contract requirements. Included are only those construction submittals for which the Designer of Record design documents do not include enough detail to ascertain contract compliance. Government review is not required for extensions of design such as structural steel or reinforcement shop drawings.

1.2.4 Information Only.

All submittals not requiring Designer of Record or Government approval will be for information only. They are not considered to be "shop drawings" within the terms of the Contract Clause referred to above.

1.2.5 GOVERNMENT REVIEWED OR "APPROVED" SUBMITTALS

The Contracting Officer's Representative conformance review or approval of submittals shall not be construed as a complete check, but will indicate only that the design, general method of construction, materials, detailing and other information appear to meet the Solicitation and Accepted Proposal. Government Review or approval will not relieve the Contractor of the responsibility for any error which may exist, as the Contractor, under the Design and CQC requirements of this contract, is responsible for design, dimensions, all design extensions, such as the design of adequate connections and details, etc., and the satisfactory construction of all work. After submittals have been reviewed for conformance or approved, as applicable, by the Contracting Officer' Representative, no resubmittal for the purpose of substituting materials or equipment will be considered unless accompanied by an explanation of why a substitution is necessary.

1.3 DISAPPROVED SUBMITTALS

The Contractor shall make all corrections required by the Contracting Officer's Representative, obtain the Designer of Record's approval, when applicable, and promptly furnish a corrected submittal in the form an number of copies specified for the initial submittal. Any "information only" submittal found to contain errors or unapproved deviations from the Solicitation or Accepted Proposal shall be resubmitted as one requiring "approval" action, requiring both Design of Record and Government approval. If the Contractor considers any correction indicated by the Government on the submittals to constitute a change to the contract, it shall promptly provide a notice in accordance with the Contract Clause "Changes" to the Contracting Officer's Representative.

1.4 WITHHOLDING OF PAYMENT

No payment for materials incorporated in the work will be made if all required Designer of Record or required Government approvals have not been obtained. No payment will be made for any materials incorporated into the work for any conformance review submittals or information only submittals found to contain errors or deviations from the Solicitation or Accepted Proposal.

PART 2 PRODUCTS (Not used)

PART 3 EXECUTION

3.1 GENERAL

The Contractor shall make submittals as required by the specifications. The Contracting Officer may request submittals in addition to those specified when deemed necessary to adequately describe the work covered in the respective sections. Units of weights and measures used on all submittals shall be the same as those used in the contract drawings. Each submittal shall be complete and in sufficient detail to allow ready determination of compliance with contract requirements. Prior to submittal, all items shall be checked and approved by the Contractor's Quality Control (CQC) System Manager and each item shall be stamped, signed, and dated by the CQC System Manager indicating action taken. Proposed deviations from the contract requirements shall be clearly identified. Submittals shall include items such as: Contractor's, manufacturer's, or fabricator's drawings; descriptive literature including (but not limited to) catalog cuts, diagrams, operating charts or curves; test reports; test cylinders; samples; O&M manuals (including parts list); certifications; warranties; and other such required submittals. Submittals requiring Government approval shall be scheduled and made prior to the acquisition of the material or equipment covered thereby. Samples remaining upon completion of the work shall be picked up and disposed of in accordance with manufacturer's Material Safety Data Sheets (MSDS) and in compliance with existing laws and regulations.

3.1.1 Design Submittals

The Contractor shall provide design submittals in accordance with Section 01012 entitled “DESIGN AFTER AWARD”.

3.2 SUBMITTAL REGISTER

The Contractor's Designer(s) of Record shall develop a complete list of submittals during design. The Designer of Record shall identify required submittals in the specifications. Use the list to prepare ENG Form 4288 Submittal Register or a computerized equivalent. The list may not be all inclusive and additional submittals may be required by other parts of the contract. The Contractor is required to complete ENG Form 4288 (including columns "a" through "r") and submit to the Contracting Officer for approval within 30 calendar days after Notice to Proceed. The approved submittal register will serve as a scheduling document for submittals and will be used to control submittal actions throughout the contract period. The submit dates and need dates used in the submittal register shall be coordinated with dates in the Contractor prepared progress schedule. Updates to the submittal register showing the Contractor action codes and actual dates with Government action codes and actual dates shall be submitted monthly or until all submittals have been

satisfactorily completed. When the progress schedule is revised, the submittal register shall also be revised and both submitted for approval. The Contractor shall maintain a submittal register for the project in accordance with Section 01312 QUALITY CONTROL SYSTEM.

3.3 SCHEDULING

Submittals covering component items forming a system or items that are interrelated shall be scheduled to be coordinated and submitted concurrently. Certifications to be submitted with the pertinent drawings shall be so scheduled. Adequate time (a minimum of 30 calendar days exclusive of mailing time) shall be allowed and shown on the register for review and approval. No delay damages or time extensions will be allowed for time lost in late submittals. An additional 10 calendar days shall be allowed and shown on the register for review and approval of submittals for food service equipment and refrigeration and HVAC control systems.

3.4 TRANSMITTAL FORM (ENG FORM 4025)

The sample transmittal form (ENG Form 4025) attached to this section shall be used for submitting both Government approved and information only submittals in accordance with the instructions on the reverse side of the form. These forms are included in the RMS-QC software that the Contractor is required to use for this contract. This form shall be properly completed by filling out all the heading blank spaces and identifying each item submitted. Special care shall be exercised to ensure proper listing of the specification paragraph and/or sheet number of the contract drawings pertinent to the data submitted for each item.

3.5 SUBMITTAL PROCEDURE

Submittals shall be made as follows:

3.5.1 Procedures

The Contractor shall be responsible for the scheduling and control of all submittals. The Contractor is responsible for confirming that the submittal register includes all submittals required by the contract documents.

In addition to those items listed on ENG Form 4288, the Contractor will furnish submittals for any deviation from the plans or specifications. The scheduled need dates must be recorded on the document for each item for control purposes and critical items must be tied to the Contractor's approved schedule where applicable.

The Contractor will submit to the Contracting Officer for approval a minimum of five copies of all G/RE (Resident/Area Office Review), G/ED (Engineering Division Review) or G/AE (Architect-Engineer Review) level submittals. Three copies of all FIO level submittals will be provided. The number of copies of submittals specified in this portion of the contract shall be complied with in lieu of four copies as specified by FAR 52.236-21.

For those contracts requiring Network Analysis System (NAS), the Contractor will schedule on the NAS critical items of equipment

submittals and procurement activities which will, or have the potential to, significantly impact project completion. The inclusion or exclusion of critical items shall be subject to the approval of the Contracting Officer. Where ENG Form 4025 must be submitted prior to approval of the Construction Progress Schedule, the Contractor shall submit an initial annotated ENG Form 4288 upon which dates for submittal, approval and delivery of procurement items shall be included for the first 60 days of the work. Upon approval of the Construction Progress Schedule, or no later than 60 days after Notice to Proceed, the Contractor shall submit final annotated copies of ENG Form 4288. Dates shall be coordinated with the approved Construction Progress Schedule to logically interface with the sequence of construction. Critical item numbers will be shown on the listing if NAS is required.

Furnishing the schedule shall not be interpreted as relieving the Contractor of his obligation to comply with all the specification requirements for the items on the schedule. Contractor's Quality Control representative shall review the listing at least every 30 days and take appropriate action to maintain an effective system. The Contractor shall furnish a list each 30 days of all submittals on which either Government's or Contractor's action is past due. He shall also furnish revised due dates in those cases when the original submittal schedule is no longer realistic. This monthly list of delayed items shall also be annotated by the Contractor to show what corrective action he is taking with regard to slippages in submittal schedule which are attributable to actions by him, his subcontractors, or suppliers.

The Contractor shall provide a complete updated submittal register indicating the current status of all submittals when requested by the Contracting Officer in order to assure himself the schedule is being maintained.

The Contractor shall certify that each submittal is correct and in strict conformance with the contract drawings and specifications. All submittals not subject to the approval of the Contracting Officer will be submitted for information purposes only.

No Corps of Engineers action will be required prior to incorporating these items into the work, but the submittal shall be furnished to the Area/Resident Engineer not less than 2 weeks prior to procurement of Contractor certified material, equipment, etc.

These Contractor approved submittals will be used to verify that material received and used in the job is the same as that described and approved and will be used as record copies. All samples of materials submitted as required by these specifications shall be properly identified and labeled for ready identification, and upon being certified by the Contractor and reviewed by the Contracting Officer, shall be stored at the site of the work for job site use until all work has been completed and accepted by the Contracting Officer. Delegation of this approval authority to Contractor Quality Control does not relieve the Contractor from the obligation to conform to any contract requirement and will not prevent the Contracting Officer from requiring removal and replacement of construction not in contract conformance; nor does it relieve the Contractor from the requirement to furnish "samples" for testing by the Government Laboratory or check testing by the Government in those instances where the technical specifications so prescribe.

Contractor certified drawings will be subject to quality assurance review by the Government at any time during the duration of the contract. No adjustment for time or money will be allowed for corrections required as a result of noncompliance with plans and specifications.

Submittals Requiring Government Approval (G/ED Level, G/RE Level or G/AE level). Where the review authority is designated to the Government, the Contractor is required to sign the certification on ENG Form 4025 in the box beside the remarks block in Section I. The Government will code the items in block h and sign the approval action block in Section II as the approving authority.

Operating and Maintenance Instructions. Six complete sets of instructions containing the manufacturer's operating and maintenance instructions for each piece of equipment shall be furnished. Each set shall be permanently bound and shall have a hard cover. One complete set shall be furnished at the time test procedures are submitted. Remaining sets shall be furnished before the contract is completed. The following identification shall be inscribed on the covers: The words "OPERATING AND MAINTENANCE INSTRUCTIONS," name and location of the facility, name of the Contractor, and contract number. Fly sheets shall be placed before instructions covering each subject. Instruction sheets shall be approximately 8-1/2 by 11 inches, with large sheets of drawings folded in. Instructions shall include but are not limited to:

(1) System layout showing piping, valves and controls;

(2) Approved wiring and control diagrams;

(3) A control sequence describing startup, operation and shutdown;

(4) Operating and maintenance instructions for each piece of equipment, including lubrication instructions and troubleshooting guide; and

(5) Manufacturer's bulletins, cuts and descriptive data; parts lists and recommended parts.

The Government will further discuss and detail the required submittal procedures at the Pre-Construction Conference.

3.5.2 Deviations

For submittals which include proposed deviations requested by the Contractor, the column "variation" of ENG Form 4025 shall be checked. The Contractor shall set forth in writing the reason for any deviations and annotate such deviations on the submittal. As stated above, the Contractor’s Designer of Record approval is required for any proposed deviations. The Government reserves the right to rescind inadvertent approval of submittals containing unnoted deviations.

3.6 CONTROL OF SUBMITTALS

The Contractor shall carefully control his procurement operations to ensure that each individual submittal is made on or before the Contractor scheduled submittal date shown on the approved "Submittal Register."

3.7 GOVERNMENT CONFORMANCE REVIEW AND APPROVED SUBMITTALS

Upon completion of review of submittals requiring Government approval, the submittals will be identified as having received approval by being so stamped and dated. Four copies of the submittal will be retained by the Contracting Officer and one copy of the submittal will be returned to the Contractor. If the Government performs a conformance review of other Designer of Record approved submittals, the submittals will be so identified and returned, as described above.

3.8 INFORMATION ONLY SUBMITTALS

Normally submittals for information only will not be returned. Approval of the Contracting Officer is not required on information only submittals. The Government reserves the right to require the Contractor to resubmit any item found not to comply with the contract. This does not relieve the Contractor from the obligation to furnish material conforming to the plans and specifications; will not prevent the Contracting Officer from requiring removal and replacement of nonconforming material incorporated in the work; and does not relieve the Contractor of the requirement to furnish samples for testing by the Government laboratory or for check testing by the Government in those instances where the technical specifications so prescribe.

3.9 STAMPS

Stamps used by the Contractor on the submittal data to certify that the submittal meets contract requirements shall be similar to the following:

CONTRACTOR

(Firm Name)

____ Approved
____ Approved with corrections as noted on the submittal data and/or attached sheets.

SIGNATURE:_____

TITLE: (DESIGNER OF RECORD)

SECTION 01420

SOURCES FOR REFERENCE PUBLICATIONS
03/03

PART 1 GENERAL

0.1 REFERENCES

Various publications are referenced in other sections of the specifications to establish requirements for the work. These references are identified in each section by document number, date and title. The document number used in the citation is the number assigned by the standards producing organization, (e.g. ASTM B 564 Nickel Alloy Forgings). However, when the standards producing organization has not assigned a number to a document, an identifying number has been assigned for reference purposes.

1.2 ORDERING INFORMATION

The addresses of the standards publishing organizations whose documents are referenced in other sections of these specifications are listed below, and if the source of the publications is different from the address of the sponsoring organization, that information is also provided. Documents listed in the specifications with numbers which were not assigned by the standards producing organization should be ordered from the source by title rather than by number.

ACI INTERNATIONAL (ACI)
P.O. Box 9094
Farmington Hills, MI 48333-9094
Ph: 248-848-3700
Fax: 248-848-3701
Internet: http://www.aci-int.org

AIR CONDITIONING AND REFRIGERATION INSTITUTE (ARI)
4100 North Fairfax Dr., Suite 200
ATTN: Pubs Dept.
Arlington, VA 22203
Ph: 703-524-8800
Fax: 703-528-3816
E-mail: ari@ari.org
Internet: http://www.ari.org

AIR CONDITIONING CONTRACTORS OF AMERICA (ACCA)
2800 Shirlington Road, Suite 300
Arlington, VA 22206
Ph: 703-575-4477
FAX: 703-575-4449
Internet: http://www.acca.org

AIR DIFFUSION COUNCIL (ADC)
1000 East Woodfield Road, Suite 102
Shaumburg, IL 60173-5921
Ph: 847-706-6750
Fax: 847-706-6751

Internet: http://www.flexibleduct.org

AIR MOVEMENT AND CONTROL ASSOCIATION INTERNATIONAL(AMCA)
30 W. University Dr.
Arlington Heights, IL 60004-1893
Ph: 847-394-0150
Fax: 847-253-0088
Internet: http://www.amca.org

ALUMINUM ASSOCIATION (AA)
900 19th Street N.W., Ste 300
Washington, DC 20006
Ph: 202-862-5100
Fax: 202-862-5164
Internet: http://www.aluminum.org

AMERICAN ARCHITECTURAL MANUFACTURERS ASSOCIATION (AAMA)
1827 Walden Ofc. Sq.
Suite 104
Schaumburg, IL 60173-4268
Ph: 847-303-5664
Fax: 847-303-5774
Internet: http://www.aamanet.org

AMERICAN ASSOCIATION OF STATE HIGHWAY AND TRANSPORTATION OFFICIALS (AASHTO)
444 N. Capital St., NW, Suite 249
Washington, DC 20001
Ph: 202-624-5800
Fax: 202-624-5806
Internet: http://www.aashto.org

AMERICAN ASSOCIATION OF TEXTILE CHEMISTS AND COLORISTS (AATCC)
P.O. Box 12215
Research Triangle Park, NC 27709-2215
Ph: 919-549-8141
Fax: 919-549-8933
Internet: http://www.aatcc.org

AMERICAN BEARING MANUFACTURERS ASSOCIATION (ABMA)
2025 M Street, NW, Suite 800
Washington, DC 20036
Ph: 202-367-1155
Fax: 202-367-2155
Internet: http://www.abma-dc.org

AMERICAN BOILER MANUFACTURERS ASSOCIATION (ABMA)
4001 North 9th Street, Suite 226
Arlington, VA 22203-1900
Ph: 703-522-7350

Fax: 703-522-2665
Internet: http://www.abma.com

AMERICAN CONCRETE PIPE ASSOCIATION (ACPA)
222 West Las Colinas Blvd., Suite 641
Irving, TX 75039-5423
Ph: 972-506-7216 or 800-290-2272
Fax: 972-506-7682
Internet: http://www.concrete-pipe.org
e-mail: info@concrete-pipe.org

AMERICAN CONFERENCE OF GOVERNMENTAL INDUSTRIAL HYGIENISTS (ACGIH)
1330 Kemper Meadow Dr.

Cincinnati, OH 45240
Ph: 513-742-2020
Fax: 513-742-3355
Internet: http://www.acgih.org
E-mail: mail@acgih.org

AMERICAN FOREST & PAPER ASSOCIATION (AF&PA)
American Wood Council
ATTN: Publications Dept.
1111 Nineteenth St. NW, Suite 800
Washington, DC 20036
Ph: 800-878-8878 or 202-463-2700
Fax: 202-463-2785
Internet: http://www.afandpa.org/

AMERICAN GAS ASSOCIATION (AGA)
400 N. Capitol St. N.W.Suite 450
Washington, D.C. 20001
Ph: 202-824-7000
Fax: 202-824-7115
Internet: http://www.aga.org

AMERICAN GAS ASSOCIATION LABORATORIES (AGAL)
400 N. Capitol St. N.W.Suite 450
Washington, D.C. 20001
Ph: 202-824-7000
Fax: 202-824-7115
Internet: http://www.aga.org

AMERICAN GEAR MANUFACTURERS ASSOCIATION (AGMA)
1500 King St., Suite 201
Alexandria, VA 22314-2730
Ph: 703-684-0211
Fax: 703-684-0242
Internet: http://www.agma.org

AMERICAN INSTITUTE OF STEEL CONSTRUCTION (AISC)
One East Wacker Dr., Suite 3100
Chicago, IL 60601-2001
Ph: 312-670-2400
Publications: 800-644-2400
Fax: 312-670-5403
Internet: http://www.aisc.org

AMERICAN INSTITUTE OF TIMBER CONSTRUCTION (AITC)
7012 So. Revere Parkway, Suite 140
Englewood, CO 80112
Ph: 303-792-9559
Fax: 303-792-0669
Internet: http://www.aitc-glulam.org

AMERICAN IRON AND STEEL INSTITUTE (AISI)
1140 Connecticut Avenue, NW, Suite 705
Washington, DC 20036
Ph: 202-452-7100
FX: 202-463-6573
Internet: http://www.steel.org

AMERICAN NATIONAL STANDARDS INSTITUTE (ANSI)
1819 L Street, NW, 6th Floor
Washington, DC 20036
Ph: 202-293-8020
Fax: 202-293-9287
Internet: http://www.ansi.org/

Note --- Documents beginning with the letter "S" can be ordered from:

Acoustical Society of America
2 Huntington Quadrangle, Suite 1NO1
Melville, NY 11747-4502
Ph: 516-576-2360
Fax: 516-576-2377
Internet: http://asa.aip.org
General e-mail: asa@aip.org

AMERICAN NURSERY AND LANDSCAPE ASSOCIATION (ANLA)
1000 Vermont Avenue, NW, Suite 300
Washington, DC 20005-4914
Ph: 202-789-2900
FAX: 202-789-1893
Internet: http://www.anla.org

AMERICAN PETROLEUM INSTITUTE (API)
1220 L St., NW
Washington, DC 20005-4070
Ph: 202-682-8000
Fax: 202-682-8223
Internet: http://www.api.org

AMERICAN PUBLIC HEALTH ASSOCIATION (APHA)
800 I Street, NW
Washington, DC 20001
PH: 202-777-2742
FAX: 202-777-2534
Internet: http://www.apha.org

AMERICAN RAILWAY ENGINEERING AND MAINTENANCE-OF-WAY ASSOCIATION (AREMA)
8201 Corporate Dr., Suite 1125
Landover, MD 20785-2230
Ph: 301-459-3200
Fax: 301-459-8077
Internet: http://www.arema.org

AMERICAN SOCIETY FOR NONDESTRUCTIVE TESTING (ASNT)
1711 Arlingate Lane
P.O. Box 28518
Columbus, OH 43228-0518
Ph: 800-222-2768; 614-274-6003
Fax: 614-274-6899
Internet: http://www.asnt.org

AMERICAN SOCIETY FOR QUALITY (ASQ)
600 North Plankinton Avenue
Milwaukee, WI 53203
Ph: 800-248-1946; 414-272-8575
Fax: 414-272-1734
Internet: http://www.asq.org

AMERICAN SOCIETY OF CIVIL ENGINEERS (ASCE)
1801 Alexander Bell Drive
Reston, VA 20191-4400
Ph: 703-295-6300 - 800-548-2723
Fax: 703-295-6222
Internet: http://www.asce.org
e-mail: marketing@asce.org

AMERICAN SOCIETY OF HEATING, REFRIGERATING AND AIR-CONDITIONING ENGINEERS (ASHRAE)
1791 Tullie Circle, NE
Atlanta, GA 30329
Ph: 800-527-4723 or 404-636-8400
Fax: 404-321-5478
Internet: http://www.ashrae.org

AMERICAN SOCIETY OF SANITARY ENGINEERING (ASSE)
901 Canterbury, Suite A
Westlake, OH 44145

Ph: 440-835-3040
Fax: 440-835-3488
E-mail: info@asse-plumbing.org
Internet: http://www.asse-plumbing.org

AMERICAN WATER WORKS ASSOCIATION(AWWA)
6666 West Quincy Avenue
Denver, CO 80235
Ph: 303-794-7711
Fax: 303-794-3951
Internet: http://www.awwa.org

AMERICAN WELDING SOCIETY (AWS)
550 N.W. LeJeune Road
Miami, FL 33126
Ph: 800-443-9353 - 305-443-9353
Fax: 305-443-7559
Internet: http://www.aws.org

AMERICAN WOOD-PRESERVERS' ASSOCIATION (AWPA)
P.O. Box 5690
Grandbury, TX 76049-0690
Ph: 817-326-6300
Fax: 817-326-6306
Internet: http://www.awpa.com

APA - THE ENGINEERED WOOD ASSOCIATION (APA)
P.O.Box 11700
Tacoma, WA 98411-0700
Ph: 253-565-6600
Fax: 253-565-7265
Internet: http://www.apawood.org

ARCHITECTURAL WOODWORK INSTITUTE (AWI)
1952 Isaac Newton Square West
Reston, VA 20190
Ph: 703-733-0600
Fax: 703-733-0584
Internet: http://www.awinet.org

ASBESTOS CEMENT PRODUCT PRODUCERS ASSOCIATION (ACPPA)
PMB114-1745 Jefferson Davis Highway
Arlington, VA 22202
Ph: 514-861-1153
Fax: 514-861-1152
Internet: www.asbestos-institute.ca

ASM INTERNATIONAL (ASM)
9639 Kinsman Road
Materials Park, OH 44073-0002

Ph: 440-338-5151
Fax: 440-338-4634
Internet: http://www.asm-intl.org

ASME INTERNATIONAL (ASME)
Three Park Avenue
New York, NY 10016-5990
Ph: 212-591-7722
Fax: 212-591-7674
Internet: http://www.asme.org

ASPHALT INSTITUTE (AI)
Research Park Dr.
P.O. Box 14052
Lexington, KY 40512-4052
Ph: 859-288-4960
Fax: 859-288-4999
Internet: http://www.asphaltinstitute.org

ASSOCIATED AIR BALANCE COUNCIL (AABC)
1518 K St., NW
Washington, DC 20005
Ph: 202-737-0202
Fax: 202-638-4833
Internet: http://www.aabchq.com
E-mail: aabchq@aol.com

ASSOCIATION FOR THE ADVANCEMENT OF MEDICAL INSTRUMENTATION (AAMI)
1110 N. Glebe Rd., Suite 220
Arlington, VA 22201-4795
Ph: 1-800-332-2264 or 703-525-4890
Fax: 703-276-0793
Internet: http://www.aami.org

ASSOCIATION OF EDISON ILLUMINATING COMPANIES (AEIC)
600 No. 18th St.
P.O. Box 2641
Birmingham, AL 35291
Ph: 205-257-2530
Fax: 205-257-2540
Internet: http://www.aeic.org

ASSOCIATION OF HOME APPLIANCE MANUFACTURERS (AHAM)
1111 19th St. NW., Suite 402
Washington, DC 20036
Ph: 202-872-5955
Fax: 202-872-9354
Internet: http://www.aham.org

ASSOCIATION OF THE WALL AND CEILING INDUSTRIES - INTERNATIONAL (AWCI)
803 West Broad Street
Falls Church, VA 22046
PH: 703-534-8300
FAX: 703-534-8307
Internet: http://www.awci.org

ASTM INTERNATIONAL (ASTM)

100 Barr Harbor Drive, PO Box C700
West Conshohocken, PA 19428-2959
Ph: 610-832-9500
Fax: 610-832-9555
Internet: http://www.astm.org

ALLIANCE FOR TELECOMMUNICATIONS INDUSTRY SOLUTIONS (ATIS)
1200 G Street NW, Suite 500
Washington, D.C. 20005
Ph: 202-628-6380
Fax: 202-393-5453
Internet: Unknown
E-mail: Unknown

BIFMA INTERNATIONAL (BIFMA)
2680 Horizon Drive SE, Suite A-1
Grand Rapids, MI 49546-7500
Ph: 616-285-3963
Fax: 616-285-3765
Internet: http://www.bifma.org
E-mail: email@bifma.org

BIOCYCLE, JOURNAL OF COMPOSTING AND RECYCLING (BIOCYCLE)
The JG Press Inc.
419 State Avenue
Emmaus PA. 18049
Ph: 610-967-4135
Internet: http://www.biocycle.net
E-mail: jgpress@jgpress.com

BRICK INDUSTRY ASSOCIATION (BIA)
11490 Commerce Park Dr.
Reston, VA 22091-1525
Ph: 703-620-0010
Fax: 703-620-3928
Internet: http://www.bia.org

BRITISH STANDARDS INSTITUTE (BSI)
389 Chiswick High Road
London W4 4AL
United Kingdom
Phone: +44 (0)20 8996 9000

Fax: +44 (0)20 8996 7001
Email: cservices@bsi-global.com
Website: http://www.bsi-global.com

BUILDERS HARDWARE MANUFACTURERS ASSOCIATION (BHMA)
355 Lexington Ave.
17th floor
New York, NY 10017
Ph: 212-297-2122
Fax: 212-370-9047
Internet: http://www.buildershardware.com

CARPET AND RUG INSTITUTE (CRI)

P.O. Box 2048
Dalton, GA 30722-2048
Ph: 1-800-882-8846 or 706-278-3176
Fax: 706-278-8835
Internet: http://www.carpet-rug.com

CAST IRON SOIL PIPE INSTITUTE (CISPI)
5959 Shallowford Rd., Suite 419
Chattanooga, TN 37421
Ph: 423-892-0137
Fax: 423-892-0817
Internet: http://www.cispi.org

CEILINGS & INTERIOR SYSTEMS CONSTRUCTION ASSOCIATION (CISCA)
1500 Lincoln Highway, Suite 202
St. Charles, IL 60174
Ph: 630-584-1919
Fax: 630-584-2003
Internet: http://www.cisca.org

CENTERS FOR DISEASE CONTROL AND PREVENTION (CDC)
1600 Clifton Road
Atlanta, GA 30333
PH: 404-639-3311

Internet: http://www.cdc.gov

CHEMICAL FABRICS & FILM ASSOCIATION (CFFA)
1300 Sumner Ave.
Cleveland OH 44115-2851
PH: 216-241-7333
FAX: 216-241-0105
Internet: http://www.chemicalfabricsandfilm.com/
OK 2/03

CHLORINE INSTITUTE (CI)

1300 Wilson Boulevard
Rosslyn, VA 22209
Ph: 703-741-5760
Fax: 703-741-6068
Internet: http://www.cl2.com

COMPRESSED AIR AND GAS INSTITUTE (CAGI)
1300 Sumner Ave.
Cleveland OH 44115-2851
PH: 216-241-7333
FAX: 216-241-0105
Internet: http://www.cagi.org/

COMPRESSED GAS ASSOCIATION (CGA)
4221 Walney Road, 5th Floor
Chantilly, VA 20151-2923
Ph: 703-788-2700
Fax: 703-961-1831
Internet: http://www.cganet.com
e-mail: cga@cganet.com

CONCRETE REINFORCING STEEL INSTITUTE (CRSI)
933 N. Plum Grove Rd.
Schaumburg, IL 60173-4758
Ph: 847-517-1200
Fax: 847-517-1206
Internet: http://www.crsi.org/

CONSUMER PRODUCT SAFETY COMMISSION (CPSC)
4330 East-West Highway
Bethesda, MD 20814-4408
Ph: 301-504-6816
Fx: 301-504-0124 and 301-504-0025
Internet: http://www.cpsc.gov

CONVEYOR EQUIPMENT MANUFACTURERS ASSOCIATION (CEMA)
6724 Lone Oak Blvd.
Naples, FL 34109
Ph: 239-514-3441
Fax: 239-514-3470
Internet: http://www.cemanet.org

COOLING TECHNOLOGY INSTITUTE (CTI)
2611 FM 1960 West
Suite H-200
Houston, TX 77068-3730
Ph: 281-583-4087
Fax: 281-537-1721
Internet: http://www.cti.org

COPPER DEVELOPMENT ASSOCIATION (CDA)
260 Madison Ave.
New York, NY 10016
Ph: 212-251-7200
Fax: 212-251-7234
Internet: http://www.copper.org
E-mail: staff@cda.copper.org

CRANE MANUFACTURERS ASSOCIATION OF AMERICA (CMAA)
8720 Red Oak Blvd., Ste, 201
Charlotte, NC 28217
Ph: 704-676-1190 or 800-722-6832
Fx: 704-676-1199
Internet: http://www.mhia.org/psc/psc_products_cranes.cfm

DISTRICT OF COLUMBIA MUNICIPAL REGULATIONS (DCMR)
441 4th Street NW, Suite 520
Washington DC 20001
PH: 202-727-5090
Internet: http://www.abfa.com/dcdocs/dcmrlist.htm

DOOR AND ACCESS SYSTEM MANUFACTURERS ASSOCIATION (DASMA)
1300 Sumner Avenue
Cleveland, OH 44115-2851
Ph: 216-241-7333
Fax: 216-241-0105
Internet: http://www.dasma.com
e-mail: dasma@dasma.com

DOOR AND HARDWARE INSTITUTE (DHI)
14150 Newbrook Dr.Suite 200
Chantilly, VA 20151-2223
Ph: 703-222-2010
Fax: 703-222-2410
Internet: http://www.dhi.org
e-mail: info@dhi.org

DUCTILE IRON PIPE RESEARCH ASSOCIATION (DIPRA)
245 Riverchase Parkway East, Suite O
Birmingham, AL 35244
Ph: 205-402-8700
Fax: 205-402-8730
Internet: http://www.dipra.org
E-mail: info@dipra.org

EIFS INDUSTRY MEMBERS ASSOCIATION (EIMA)
3000 Corporate Center Drive, Suite 270
Morrow, GA 30260
Ph: 800-294-3462
Fax: 770-968-5818
Internet: http://www.eima.com

ELECTRICAL GENERATING SYSTEMS ASSOCIATION (EGSA)
1650 South Dixie Highway, Ste. 500
Boca Raton, FL 33432-7462
Ph: 561-750-5575
Fax: 561-395-8557
Internet: http://www.egsa.org

ELECTRONIC INDUSTRIES ALLIANCE (EIA)
2500 Wilson Blvd.
Arlington, VA 22201-3834
Ph: 703-907-7500
Fax: 703-907-7501
Internet: http://www.eia.org

ENERGY RESEARCH AND DEVELOPMENT ADMINISTRATION (ERDA)
Organization abolished by Dept of Energy Act
(91 Stat 577)4 Aug 1977
Successor Organization is Department of Energy
Forrestal 4B-222
Washington, DC, 202-586-4716
PH: 202-586-4716
FAX: 202-586-1972
Internet: http://www.directives.doe.gov/

ENGINE MANUFACTURERS ASSOCIATION (EMA)
Two North LaSalle Street, Suite 2200
Chicago, Il 60602
PH: 312-827-8700
FAX: 312-827-8737
Internet: http://www.engine-manufacturers.org/

ETL TESTING LABORATORIES (ETL)
Intertek Testing Services, ETL SEMKO
70 Codman Hill Road
Boxborough, MA 01719
PH: 978-263-2662
FAX: 978-263-7086
Internet: http://www.etlsemko.com
E-mail: info@etlsemko.com

EXPANSION JOINT MANUFACTURERS ASSOCIATION (EJMA)
25 N Broadway
Tarrytown, NY 10591
Ph: 914-332-0040
Fax: 914-332-1541
Internet: http://www.ejma.org

FM GLOBAL (FM)
1301 Atwood Avenue

P.O. Box 7500
Johnston, RI 02919
Ph: 401-275-3000
Fax: 401-275-3029
Internet: http://www.fmglobal.com

FLUID SEALING ASSOCIATION (FSA)
994 Old Eagle School Road #1019
Wayne, PA 19087
PH: 610-971-4850
FAX: 610-9971-4859
Internet: http://www.fluidsealing.com
E-mail: info@fluidsealing.com

FORESTRY SUPPLIERS (FSUP)
205 West Rankin St.
P.O. Box 8397
Jackson, MS 39284-8397
Ph: 601-354-3565
Fax: 601-292-0165
Internet: http://www.forestry-suppliers.com

FOUNDATION FOR CROSS-CONNECTION CONTROL AND HYDRAULIC RESEARCH (FCCCHR)
University of South California
Kaprielian Hall 200
Los Angeles, CA 90089-2531
Ph: 213-740-2032
Fax: 213-740-8399
Internet: http://www.usc.edu/dept/fccchr

GEOLOGICAL SOCIETY OF AMERICA (GSA)
P.O. Box 9140
Boulder, CO 80301-9140
Ph: 303-447-2020
Fax: 303-357-1070
Internet: http://www.geosociety.org

GEOSYNTHETIC INSTITUTE (GSI)
475 Kedron Ave.
Folsom, PA 19033
Ph: 610-522-8440
Fax: 610-522-8441
Internet: http://www.geosynthetic-institute.org

GLASS ASSOCIATION OF NORTH AMERICA (GANA)
2945 SW Wanamaker Drive, Suite A
Topeka, KS 66614
Ph: 785-271-0208
Fax: 785-271-0166
Internet: http://www.glasswebsite.com/GANA

GYPSUM ASSOCIATION (GA)
810 First St. NE, Suite 510
Washington, DC 20002
Ph: 202-289-5440
Fax: 202-289-3707
Internet: http://www.gypsum.org

HARDWOOD PLYWOOD & VENEER ASSOCIATION (HPVA)

P.O. Box 2789
Reston, VA 20195-0789
Ph: 703-435-2900
Fax: 703-435-2537
Internet: http://www.hpva.org

HEAT EXCHANGE INSTITUTE (HEI)
1300 Sumner Ave
Cleveland, OH 44115-2851
Ph: 216-241-7333
Fax: 216-241-0105
Internet: http://www.heatexchange.org
email: hei@heatexchange.org

HOIST MANUFACTURERS INSTITUTE (HMI)
8720 Red Oak Blvd., Suite 201
Charlotte, NC 28217
PH: 704-676-1190
FAX: 704-676-1199
Internet: http://www.mhia.org/psc/PSC_Products_Hoists.cfm

H.P. WHITE LABORATORY (HPW)
3114 Scarboro Rd.
Street, MD 21154
Ph: 410-838-6550
fax: 410-838-2802
Internet: http://www.hpwhite.com

HYDRAULIC INSTITUTE (HI)
9 Sylvan Way
Parsippany, NJ 07054-3802
Ph: 973-267-9700
Fax: 973-267-9055
Internet: http://www.pumps.org

HYDRONICS INSTITUTE DIVISION OF GAMA (HYI)
35 Russo Pl.
P.O. Box 218
Berkeley Heights, NJ 07922-0218
Ph: 908-464-8200

Fax: 908-464-7818
Internet: http://www.gamanet.org/publist/hydroordr.htm

IBM CORPORATION (IBM)
Publications
4800 Falls of the Neuse
Raleigh, NC 27609
Ph: 800-879-2755, Option 1
Fax: 800-445-9269
Internet: http://www.ibm.com/shop/publications/order

ILLUMINATING ENGINEERING SOCIETY OF NORTH AMERICA (IESNA)
120 Wall St., 17th Floor
New York, NY 10005
Ph: 212-248-5000
Fax: 212-248-5017
Internet: http://www.iesna.org

INDUSTRIAL FASTENERS INSTITUTE (IFI)
1717 East 9th St., Suite 1105
Cleveland, OH 44114-2879
Ph: 216-241-1482
Fax: 216-241-5901
Internet: http://www.industrial-fasteners.org
e-mail: indfast@aol.com

INSECT SCREENING WEAVERS ASSOCIATION (ISWA)
DEFUNCT in 1997

INSTITUTE OF CLEAN AIR COMPANIES (ICAC)
1660 L St., NW, Suite 1100
Washington, DC 20036-5603
Ph: 202-457-0911
Fax: 202-331-1388
E-mail: jsmith@icac.com
Internet: http://icac.com

INSTITUTE OF ELECTRICAL AND ELECTRONICS ENGINEERS (IEEE)
445 Hoes Ln
Piscataway, NJ 08855-1331
Ph: 732-981-0060
Fax: 732-981-1712
Internet: http://www.ieee.org
E-mail: customer.services@ieee.org

INSTITUTE OF ENVIRONMENTAL SCIENCES AND TECHNOLOGY (IEST)
5005 Newport Drive, Suite 566
Rolling Meadows, IL 60008-3841
Ph: 847-255-1561
Fax: 847-255-1699

Internet: http://www.iest.org

INSULATED CABLE ENGINEERS ASSOCIATION (ICEA)
P.O. Box 1568
Carrollton, GA 30112
Ph: 770-830-0369
Fax: 770-830-8501

Internet: http://www.icea.net

INSULATING GLASS MANUFACTURERS ALLIANCE (IGMA)
27 Goulburn Avenue
Ottawa, Ontario. CANADA
K1N 8C7
Phone: 613-233-1510
Fax: 613-233-1929
e-mail: info@igmaonline.org
Internet: http://www.igmaonline.org

CANADIAN STANDARDS ASSOCIATION(CSA)
8501 East Pleasant Valley Rd.
Cleveland, OH 44131
Ph: 216-524-4990
Fax: 216-328-8118
Internet: http://www.csa-international.org

INTERNATIONAL CODE COUNCIL (ICC)
5203 Leesburg Pike, Suite 600
Falls Church, VA 22041
Ph: 703-931-4533
Fax: 703-379-1546
Internet: http://www.intlcode.org

INTERNATIONAL CONCRETE REPAIR INSTITUTE (ICRI)
3166 S. River Road, Suite 132
Des Planies, IL 60018
Ph: 847-827-0830
Pax: 847-827-0832
Internet: http://www.icri.org

INTERNATIONAL CONFERENCE OF BUILDING OFFICIALS (ICBO)
5360 Workman Mill Rd.
Whittier, CA 90601-2298
Ph: 800-284-4406
Ph: 562-699-0541
Fax: 562-692-3853
Internet: http://www.icbo.org

INTERNATIONAL ELECTRICAL TESTING ASSOCIATION (NETA)
P.O. Box 687

106 Stone Street
Morrison, Colorado 80465
PH: 303-697-8441
FAX: 303-697-8431
Internet: http://www.netaworld.org

INTERNATIONAL ELECTROTECHNICAL COMMISSION (IEC)
3, rue de Varembe, P.O. Box 131
CH-1211 Geneva 20, Switzerland
Ph: 41-22-919-0211
Fax: 41-22-919-0300
Internet: http://www.iec.ch
e-mail: info@iec.ch

INTERNATIONAL GROUND SOURCE HEAT PUMP ASSOCIATION (IGSHPA)
Oklahoma State University
499 Cordell South
Stillwater OK 74078-8018
PH: 800-626-4747; 405-744-5175
FAX: 405-744-5283
Internet: http://www.igshpa.okstate.edu/

INTERNATIONAL INSTITUTE OF AMMONIA REFRIGERATION (IIAR)
1110 N. Glebe Rd., Suite 250
Arlington, VA 22201
Ph: 703-312-4200
Fax: 703-312-0065
Internet: http://www.iiar.org
e-mail: iiar@iiar.org

INTERNATIONAL MUNICIPAL SIGNAL ASSOCIATION (IMSA)
P.O. Box 539
165 East Union St.
Newark, NY 14513-0539
Ph: 315-331-2182
Ph: 800-723-4672
Fax: 315-331-8205
Internet: http://www.imsasafety.org/

INTERNATIONAL ORGANIZATION FOR STANDARDIZATION (ISO)
1, rue de Varembe'
Case Postale 56
CH-1211 Geneve 20 Switzerland
Ph: 41-22-749-0111
Fax: 41-22-733-3430
Internet: http://www.iso.ch
e-mail: central@iso.ch

INTERNATIONAL SLURRY SURFACING ASSOCIATION (ISSA)
3 Church Circle, PMB 250
Annapolis, MD 21401

Ph: 410-267-0023
Fax: 410-267-7546
Internet: http://www.slurry.org
e-mail: krissoff@slurry.org

INTERNATIONAL TELECOMMUNICATION UNION (ITU)
Order from:
U.S. Dept of Commerce
National Technical Information Service
5285 Port Royal Road.
Springfield, VA 22161
Ph: 703-605-6040
FAX: 703-605-6887
Internet: http://www.ntis.gov

For documents not avail from Dept of Commerce:
Sales Service
International Telecommunication Union
Place des Nations
CH-1211 Geneve 20
Switzerland
E-Mail: itumail@itu.int
Ph: 41.22.730.5111
Fax: 41.22.730.6500
Internet: http://www.itu.org

IPC - ASSOCIATION CONNECTING ELECTRONICS INDUSTRIES (IPC)
2215 Sanders Rd.
Northbrook, IL 60062-6135
Ph: 847-509-9700
Fax: 847-509-9798
Internet: http://www.ipc.org
e-mail: info@ipc.org

IRON & STEEL SOCIETY (ISS)
186 Thorn Hill Road
Warrendale, PA 15086-7528
Ph: 724-776-1535 Ext 1
Fax: 724-776-0430
E-Mail: mailbag@issource.org
Internet: http://www.issource.org

ISA - THE INSTRUMENTATION, SYSTEMS AND AUTOMATION SOCIETY (ISA)
67 Alexander Drive
P.O. Box 12277
Research Triangle Park, NC 27709
Ph: 919-549-8411
Fax: 919-549-8288
e-mail: info@isa.org
Internet: http://www.isa.org

KITCHEN CABINET MANUFACTURERS ASSOCIATION (KCMA)

1899 Preston White Dr.
Reston, VA 20191-5435
Ph: 703-264-1690
Fax: 703-620-6530
Internet: http://www.kcma.org

L.H. BAILEY HORTORIUM (LHBH)
Dept of Plant Biology
c/o Cornell University
228 Plant Science Building
Ithaca, NY 14853
PH: 607-255-4477
Internet: http://www.plantbio.cornell.edu/Hort.php

MANUFACTURERS STANDARDIZATION SOCIETY OF THE VALVE AND FITTINGS INDUSTRY (MSS)
127 Park St., NE
Vienna, VA 22180-4602
Ph: 703-281-6613
Fax: 703-281-6671
Internet: http://www.mss-hq.com
e-mail: info@mss-hq.com

MAPLE FLOORING MANUFACTURERS ASSOCIATION (MFMA)
60 Revere Dr., Suite 500
Northbrook, IL 60062
Ph: 847-480-9138
Fax: 847-480-9282
Internet: http://www.maplefloor.org

MARBLE INSTITUTE OF AMERICA (MIA)
28901 Clemens Road, Suite 100
Westlake, OH 44145
Ph: 440-250-9222
Fax: 440-250-9223
Internet: http://www.marble-institute.com
e-mail: info@marble-institute.com

MASTER PAINTERS INSTITUTE (MPI)
4090 Graveley Street
Burnaby, BC CANADA V5C 3T6
PH: 888-674-8937
Fx: 888-211-8708
Internet: http://www.paintinfo.com/mpi

METAL BUILDING MANUFACTURERS ASSOCIATION (MBMA)
1300 Sumner Ave.
Cleveland, OH 44115-2851
Ph: 216-241-7333
Fax: 216-241-0105
Internet: http://www.mbma.com

e-mail: mbma@mbma.com

MIDWEST INSULATION CONTRACTORS ASSOCIATION (MICA)
2017 So. 139th Cir.
Omaha, NE 68144-2149
Ph: 800-747-6422
Fax: 402-330-9702
Internet: http://www.micainsulation.org
e-mail: info@micainsulation.org

MONORAIL MANUFACTURERS ASSOCIATION (MMA)
8720 Red Oak Blvd., Suite 201
Charlotte, NC 28217
PH: 704-676-1190
FAX: 704-676-1199
Internet: http://www.mhia.org/mma

NACE INTERNATIONAL (NACE)
1440 South Creek Drive
Houston, TX 77084-4906
Ph: 281-228-6200
Fax: 281-228-6300
Internet: http://www.nace.org

NATIONAL ASSOCIATION OF ARCHITECTURAL METAL MANUFACTURERS (NAAMM)
8 S. Michigan Ave, Suite 1000
Chicago, IL 60603
Ph: 312-322-0405
Fax: 312-332-0706
Internet: <URL>http://www.naamm.org</URL>
e-mail: naamm@gss.net

NATIONAL BOARD OF BOILER AND PRESSURE VESSEL INSPECTORS (NBBPVI)
1055 Crupper Ave.
Columbus, OH 43229-1183
Ph: 614-888-8320
Fax: 614-847-1147
Internet: http://www.nationalboard.org
e-mail: tbecker@nationalboard.org

NATIONAL CABLE TELECOMMUNICATIONS ASSOCIATION (NCTA)
1724 Massachusetts Ave. NW
Washington, DC 20036-1969
Ph: 202-775-3550
Fax: 202-775-1055
Internet: http://www.ncta.com

NATIONAL CONCRETE MASONRY ASSOCIATION (NCMA)
13750 Sunrise Valley Drive
Herndon, VA 20171

Ph: 703-713-1900
Fax: 703-713-1910
Internet: http://www.ncma.org

NATIONAL COUNCIL ON RADIATION PROTECTION AND MEASUREMENTS (NCRP)
7910 Woodmont Ave., Suite 800
Bethesda, MD 20814-3095
Ph: 800-229-2652
Ph. 301-657-2652
Fax: 301-907-8768
Internet: http://www.ncrp.com

NATIONAL DRILLING ASSOCIATION (NDA)
10901D Roosevelt Boulevard North, Suite 100
St. Petersburg, FL 33716
Ph: 727-577-5006
FAX: 727-577-5012
Internet: http://www.nda4u.com/
E-mail: info@nda4u.com

NATIONAL ELECTRICAL MANUFACTURERS ASSOCIATION (NEMA)
1300 N. 17th St., Suite 1847
Rosslyn, VA 22209
Ph: 703-841-3200
Fax: 703-841-3300
Internet: http://www.nema.org/
E-mail: jas_peak@nema.org

NATIONAL ENVIRONMENTAL BALANCING BUREAU (NEBB)
8575 Grovemont Circle
Gaithersburg, MD 20877-4121
Ph: 301-977-3698
Fax: 301-977-9589
Internet: http://www.nebb.org

NATIONAL FENESTRATION RATING COUNCIL (NFRC)
1300 Spring Street, Suite 500
Silver Spring, MD 20910
Ph: 301-589-6372
Fax: 303-588-6342
Internet: http://www.nfrc.org
E-Mail: nfrcusa@aol.com or info@nfrc.com

NATIONAL FIRE PROTECTION ASSOCIATION (NFPA)
1 Batterymarch Park
P.O. Box 9101
Quincy, MA 02269-9101
Ph: 617-770-3000
Fax: 617-770-0700
Internet: http://www.nfpa.org

NATIONAL FLUID POWER ASSOCIATION (NFLPA)
3333 N. Mayfair Rd.
Milwaukee, WI 53222-3219
Ph: 414-778-3344
Fax: 414-778-3361
Internet: http://www.nfpa.com
E-mail: nfpa@nfpa.com

NATIONAL HARDWOOD LUMBER ASSOCIATION (NHLA)
6830 Raleigh LaGrange Road
P.O. Box 34518
Memphis, TN 38184-0518
Ph: 901-377-1818
Fax: 901-382-6419
e-mail: info@natlhardwood.org
Internet: http://www.natlhardwood.org

NATIONAL INSTITUTE FOR CERTIFICATION IN ENGINEERING TECHNOLOGIES (NICET)
1420 King Street
Alexandria, VA 22314-2794
Ph: 888-476-4238
Internet: http://www.nicet.org

NATIONAL INSTITUTE FOR OCCUPATIONAL SAFETY AND HEALTH (NIOSH)
Mail Stop C-13
4676 Columbia Parkway
Cincinnati, OH 45226-1998
Ph: 800-356-4674
Fx: 513-533-8573
Internet: http://www.cdc.gov/niosh/homepage.html
To order pubs for which a fee is charged, order from:
Superintendent of Documents
U.S. Government Printing Office
732 North Capitol Street, NW
Mailstop: SDE
Washington, DC 20401
Ph: 866-512-2800 or 202-512-1800
Fax: 202-512-2250
Internet: http://www.gpo.gov

NATIONAL INSTITUTE OF JUSTICE (NIJ)
National Law Enforcement and Corrections Technology Center
2277 Research Blvd. - Mailstop 1E
Rockville, MD 20850
Ph: 800-248-2742 or 301-519-5060
Fax: 301-519-5149
Internet: http://www.nlectc.org
e-mail: asknlectc@nlectc.org

NATIONAL INSTITUTE OF STANDARDS AND TECHNOLOGY (NIST)

100 Bureau Drive
Stop 3460
Gaithersburg, MD 20899-3460
Ph: 301-975-NIST
Internet: http://www.nist.gov
Order Publications From:
Superintendent of Documents
U.S. Government Printing Office
732 North Capitol Street, NW
Mailstop: SDE
Washington, DC 20401
Ph: 866-512-1800 or 202-512-1800
Fax: 202-512-2250
Internet: http://www.gpo.gov
or
National Technical Information Services (NTIS)
5285 Port Royal Rd.
Springfield, VA 22161
Ph: 703-605-6000
Fax: 703-605-6900
Internet: http://www.ntis.gov

NATIONAL LIME ASSOCIATION (NLA)
200 North Glebe Road, Suite 800
Arlington, VA 22203
PH: 703-243-5463
FAX: 703-243-5489
Internet: http://www.lime.org

NATIONAL OAK FLOORING MANUFACTURERS ASSOCIATION (NOFMA)
P.O. Box 3009
Memphis, TN 38173-0009
Ph: 901-526-5016
Fax: 901-526-7022
Internet: http://www.nofma.org

NATIONAL READY-MIXED CONCRETE ASSOCIATION (NRMCA)
900 Spring St.
Silver Spring, MD 20910
Ph: 301-587-1400
Fax: 301-585-4219
Internet: http://www.nrmca.org

NATIONAL ROOFING CONTRACTORS ASSOCIATION (NRCA)
10255 W. higgins Rd., Suite 600
Rosemont, IL 60018
Ph: 847-299-9070
Fax: 847-299-1183
Internet: http://www.nrca.net

NATIONAL TERRAZZO & MOSAIC ASSOCIATION (NTMA)
110 East Market St., Suite 200 A

Leesburg, Virginia 20176
Ph: 703-779-1022 or 800-323-9736
Fax: 703-779-1026
Internet: http://www.ntma.com
e-mail: info@ntma.com

NATURAL RESOURCE, AGRICULTURAL AND ENGINEERING SERVICE (NRAES)
Cooperative Extension
152 Riley-Robb Hall
Ithaca, NY 14853-5701
Ph: 607-255-7654
Fax: 607-254-8770
Internet: http://www.nraes.org
E-mail: nraes@cornell.edu

NORTH AMERICAN INSULATION MANUFACTURERS ASSOCIATION (NAIMA)
44 Canal Center Plaza, Suite 310
Alexandria, VA 22314
Ph: 703-684-0084
Fax: 703-684-0427
Internet: http://www.naima.org
e-mail: insulation@naima.org

NORTHEASTERN LUMBER MANUFACTURERS ASSOCIATION (NELMA)
272 Tuttle Road
P.O. Box 87A
Cumberland Center, ME 04021
Ph: 207-829-6901
Fax: 207-829-4293
Internet: http://www.nelma.org
e-mail: info@nelma.org

NSF INTERNATIONAL (NSF)
ATTN: Publications
789 North Dixboro Rd.
P.O. Box 130140
Ann Arbor, MI 48113-0140
Ph: 734-769-8010
Fax: 734-769-0109
Toll Free: 800-NSF-MARK
Internet: http://www.nsf.org

PIPE FABRICATION INSTITUTE (PFI)
655 32nd Avenue, Suite 201
Lachine, QC, Canada H8T 3G6
Ph: 514-634-3434
Fax: 514-634-9736
Internet: http://www.pfi-institute.org
e-mail: pfi@pfi-institute.org

PLASTIC PIPE AND FITTINGS ASSOCIATION (PPFA)

800 Roosevelt Rd., Bldg C, Suite 20
Glen Ellyn, IL 60137
Ph: 630-858-6540
Fax: 630-790-3095
Internet: http://www.ppfahome.org

PLASTICS PIPE INSTITUTE (PPI)
1825 Connecticut Ave. NW
Washington, D. C. 20009
Ph: 202-462-9607
Fax: 202-462-9779
Internet: http://www.plasticpipe.org

PLUMBING AND DRAINAGE INSTITUTE (PDI)
45 Bristol Dr.
South Easton, MA 02375
Ph: 508-230-3516 or 800-589-8956
Fax: 508-230-3529
Internet: http://www.pdionline.org
E-Mail: info@pdionline.org

PLUMBING AND MECHANICAL CONTRACTORS ASSOCIATION (PMCA)
9450 SW Commerce Circle, Suite 310
Wilsonville, OR 97070-9626
Ph: 503-682-7919
Fax: 503-682-6241
Internet: http://www.pmcaoregon.com/

PLUMBING-HEATING-COOLING CONTRACTORS NATIONAL ASSOCIATION (PHCC)
180 S. Washington Street
P.O. Box 6808
Falls Church, VA 22040
Ph: 800-533-7694
Fax: 703-237-7442
Internet: http://www.phccweb.org

PORCELAIN ENAMEL INSTITUTE (PEI)
5696 Peachtree Parkway, PO Box 920220
Norcross, GA 30092
Ph: 770-242-2632
Fax: 770-446-1452
Internet: http://www.porcelainenamel.com
e-mail: penamel@aol.com

POST-TENSIONING INSTITUTE (PTI)
1717 West Northern Avenue, Suite 114
Phoenix, AZ 85021
Ph: 602-870-7540
Fax: 602-870-7541
Internet: http://www.post-tensioning.org/

PRECAST/PRESTRESSED CONCRETE INSTITUTE (PCI)
209 West Jackson Blvd.
Chicago, IL 60606-6938
Ph: 312-786-0300
Fax: 312-786-0353
Internet: http://www.pci.org
e-mail: info@pci.org

REDWOOD INSPECTION SERVICE (RIS)
405 Efrente Drive, Suite 200
Novato, CA 94949
Ph: 415-382-0662
Fax: 415-382-8531
Internet: http://www.calredwood.org
E-Mail: cjjourdain@worldnet.att.net

RUBBER MANUFACTURERS ASSOCIATION (RMA)
1400 K St., NW, Suite 900
Washington, DC 20005
Ph: 202-682-4846
Fax: 202-682-4854
Internet: http://www.rma.org
Order Publications from:
The Mail Room
P. O. Box 3147
Medina, OH 44258
Ph: 800-325-5095 EXT 242 or 330-723-2978
Fax: 330-725-0576

SCIENTIFIC CERTIFICATION SYSTEMS (SCS)
1939 Harrison Street, Suite 400
Oakland, CA 94612
Ph: 510-832-1415
FAX: 510-832-0359
Internet: http://www.scs1.com

SCREEN MANUFACTURERS ASSOCIATION (SMA)
2850 South Ocean Boulevard, Suite 114
Palm Beach, FL 33480-5535
Ph: 561-533-0991
Fax: 561-533-7466
e-mail: fitzgeraldfscott@aol.com
Internet: http://www.smacentral.org

SEMICONDUCTOR EQUIPMENT AND MATERIALS INTERNATIONAL (SEMI)
3081 Zanker Road
San Jose, CA 95134
Phone: 1.408.943.6900
Fax: 1.408.428.9600
Internet: http://www.semi.org
E-mail: semihq@semi.org

SHEET METAL & AIR CONDITIONING CONTRACTORS' NATIONAL ASSOCIATION (SMACNA)
4201 Lafayette Center Dr.,
Chantilly, VA 20151-1209
Ph: 703-803-2980
Fax: 703-803-3732
Internet: http://www.smacna.org
e-mail: info@smacna.org

SPRI (SPRI)
200 Reservoir St., Suite 309A
Needham, MA 02494
Ph: 781-444-0242
Fax: 781-444-6111
Internet: http://www.spri.org
e-mail: spri@spri.org

SOCIETY OF AUTOMOTIVE ENGINEERS INTERNATIONAL (SAE)
400 Commonwealth Dr.
Warrendale, PA 15096-0001
Ph: 724-776-4841
Fax: 724-776-5760
Internet: http://www.sae.org
e-mail: custsvc@sae.org

SOCIETY OF MOTION PICTURE & TELEVISION ENGINEERS (SMPTE)
595 West Hartsdale Avenue
WhitePlains, New York 10607
PH: 914-761-1100
FAX: 914-761-3115
Internet: http://www.smpte.org

SPRAY POLYURETHANE FOAM ALLIANCE (SPFA)
American Plastics Council
1300 Wilson Boulevard, Suite 800
Arlington Virginia 22209
PH: 800-523-6154
FX: 703-252-0664
E-mail: feedback@sprayfoam.org
Internet: http://www.sprayfoam.org

SOLAR RATING AND CERTIFICATION CORPORATION (SRCC)
c/o FSEC, 1679 Clearlake Road
Cocoa, FL 32922-5703
PH: 321-638-1537
FAX: 321-638-1010
Internet: http://www.solar-rating.org

SOUTHERN CYPRESS MANUFACTURERS ASSOCIATION (SCMA)
400 Penn Center Boulevard, Suite 530
Pittsburgh, PA 15235
Ph: 412-829-0770
Fax: 412-829-0844
Internet: http://www.cypressinfo.org

SOUTHERN PINE INSPECTION BUREAU (SPIB)
4709 Scenic Highway
Pensacola, FL 32504-9094
Ph: 850-434-2611
Fax: 850-433-5594
e-mail: spib@spib.org
Internet: http://www.spib.org

STATE OF CALIFORNIA DEPARTMENT OF FOOD AND AGRICULTURE (CDFA)
Plant Health and Pest Prevention Services
Pest Exclusion Branch/Nursery, Seed and Cotton Program
1220 N Street, Room A-372
Sacramento CA 95814
PH: 916-653-0435
Internet: http://www.cdfa.ca.gov/phpps/nipm.htm

STATE OF CALIFORNIA DEPARTMENT OF TRANSPORTATION (CDT)
Publication Distribution Unit
1900 Royal Oaks Dr.
Sacramento, CA 95815
Ph: 916-445-3520 or 916-227-7000 (CA Transportation Lab)
Fax: 916-324-8997
Internet: http://www.dot.ca.gov

STATE OF MARYLAND CODE OF MARYLAND REGULATIONS (COMAR)
1700 Margaret Avenue
Annapolis, MD 21401
phone: 410-974-2486
fax: 410-974-2546
Internet: http://www.sos.state.md.us/sos/dsd/comar/html/comar.html

STATE OF NORTH CAROLINA ADMINISTRATIVE CODE (NCAC)
Internet: http://ncrules.state/nc.us

STATE OF VIRGINIA ADMINISTRATIVE CODE (VAC)
Virginia Code Commission
General Assembly Building, 2nd Floor
910 Capitol Street
Richmond, Virginia 23219
Phone: 804-786-3591
Fax: 804-692-0625
Internet: http://legis.state.va.us/statutesandregulations/admincode.htm

STEEL DECK INSTITUTE (SDI)
P.O. Box 25
Fox River Grove, IL 60021-0025
Ph: 847-462-1930
Fax: 847-462-1940
Internet: http://www.sdi.org
e-mail: Steve@sdi.org

STEEL DOOR INSTITUTE (SDI)
30200 Detroit Rd.
Cleveland, OH 44145-1967
Ph: 440-899-0010
Fax: 440-892-1404
Internet: http://www.steeldoor.org

STEEL JOIST INSTITUTE (SJI)
3127 Tenth Ave., North Ext.
Myrtle Beach, SC 29577-6760
Ph: 843-626-1995
Fax: 843-626-5565
Internet: http://www.steeljoist.org

STEEL TANK INSTITUTE (STI)
570 Oakwood Rd.
Lake Zurich, IL 60047
Ph: 847-438-8265
Fax: 847-438-8766
Internet: http://www.steeltank.com

STEEL WINDOW INSTITUTE (SWI)
1300 Sumner Ave.
Cleveland, OH 44115-2851
Ph: 216-241-7333
Fax: 216-241-0105
Internet: http://www.steelwindows.com

TECHNICAL ASSOCIATION OF THE PULP AND PAPER INDUSTRY (TAPPI)
P.O. Box 105113
Atlanta, GA 30348-5113
PH: 800-322-8686
FAX: 770-446-6947
Internet: http://www.tappi.org

THE SOCIETY FOR PROTECTIVE COATINGS (SSPC)
40 24th Street, 6th Floor
Pittsburgh, PA 15222-4656
Ph: 412-281-2331
Fax: 412-281-9992
Internet: http://www.sspc.org

TILE COUNCIL OF AMERICA (TCA)
100 Clemson Research Blvd
Anderson, SC 29625
Ph: 864-646-8453
FAX: 864-646-2821
Internet: http://www.tileusa.com
e-mail: literature@tileusa.com

TRUSS PLATE INSTITUTE (TPI)
583 D'Onofrio Dr., Suite 200
Madison, WI 53719
Ph: 608-833-5900
Fax: 608-833-4360
Internet: http://www.tpinst.org

TUBULAR EXCHANGER MANUFACTURERS ASSOCIATION (TEMA)
25 N. Broadway
Tarrytown, NY 10591
Ph: 914-332-0040
Fax: 914-332-1541
Internet: http://www.tema.org

TURFGRASS PRODUCERS INTERNATIONAL (TPI)
1855-A Hicks Road
Rolling Meadows, IL 60008
PH: 800-405-8873
FAX: 847-705-8347
Internet: http://www.turfgrasssod.org

UNDERWRITERS LABORATORIES (UL)
333 Pfingsten Rd.
Northbrook, IL 60062-2096
Ph: 847-272-8800
Fax: 847-272-8129
Internet: http://www.ul.com/
e-mail: northbrook@us.ul.com

UNI-BELL PVC PIPE ASSOCIATION (UBPPA)
2655 Villa Creek Dr., Suite 155
Dallas, TX 75234
Ph: 214-243-3902
Fax: 214-243-3907
Internet: http://www.uni-bell.org
e-mail: info@uni-bell.org

UNIVERSITY OF CALIFORNIA DIVISION OF AGRICULTURE AND NATURAL RESOURCES (UCDANR)
FRANKLIN BUILDING
1111 Franklin St., 6th floor
Oakland, CA 94607-5200
Internet: http://http://www.ucanr.org

U.S. AIR FORCE (USAF)
Air Force Publishing Distribution Center
Ph: 410-687-3330
E-mail: afpdc-service@pentagon.af.mil
Internet: http://www.e-publishing.af.mil/

U.S. ARMY (DA)
U.S. Army Publications Agency
Internet: http://www.usapa.army.mil/
AOK: 4/02
LOK: 7/02

U.S. ARMY CENTER FOR HEALTH PROMOTION AND PREVENTIVE MEDICINE (USACHPPM)
5158 Blackhawk Road
Aberdeen Proving Ground
MD 21010-5403
PH: 800-222-9698; website
Internet: http://chppm-www.apgea.army.mil

U.S. ARMY CORPS OF ENGINEERS (USACE)
Order CRD-C DOCUMENTS from:
U.S. Army Engineer Waterways Experiment Station
ATTN: Technical Report Distribution Section, Services Branch, TIC
3909 Halls Ferry Rd.
Vicksburg, MS 39180-6199
Ph: 601-634-2664
Fax: 601-634-2388
Internet: http://www.wes.army.mil/SL/MTC/handbook/handbook.htm

Order Other Documents from:
USACE Publications Depot
Attn: CEIM-SP-D
2803 52nd Avenue
Hyattsville, MD 20781-1102
Ph: 301-394-0081
Fax: 301-394-0084
Internet: http://www.usace.army.mil/publications
or http://www.hnd.usace.army.mil/techinfo/index.htm

U.S. ARMY EDGEWOOD RESEARCH, DEVELOPMENT, AND ENGINEERING CENTER (EA)
Aberdeen Proving Ground, MD
Internet: Unknown

U.S. ARMY ENVIRONMENTAL CENTER (AEC)
5179 Hoadley Road
Aberdeen Proving Ground, MD 21010-5401
Internet: http://aec.army.mil
Order from:
National Technical Information Services (NTIS)

5285 Port Royal Rd.
Springfield, VA 22161
Ph: 703-605-6000
Fax: 703-605-6900
Internet: http://www.ntis.gov

U.S. BUREAU OF RECLAMATION (BOR)
Denver Federal Center
P.O. Box 25007
Denver, CO 80225
Ph: 303-445-2080
Internet: http://www.usbr.gov
Order from:
National Technical Information
Services (NTIS)
5285 Port Royal Rd.
Springfield, VA 22161
Ph: 703-605-6000
Fax: 703-605-6900
Internet: http://www.ntis.gov

U.S. DEFENSE INTELLIGENCE AGENCY (DIA)
Defense Intelligence Analysis Center (DIAC)
MacDill Boulevard and Luke Avenue
Bolling AFB, MD
Internet: http://www.dia.mil

U.S. DEFENSE LOGISTICS AGENCY (DLA)
Andrew T. McNamara Building
8725 John J. Kingman Road
Fort Belvoir, VA 22060
Internet: http://www.dla.mil

U.S. DEPARTMENT OF AGRICULTURE (USDA)
Order AMS Publications from:
AGRICULTURAL MARKETING SERVICE (AMS)
Seed Regulatory and Testing Branch
USDA, AMS, LS Div.
Room 209, Bldg. 306, BARC-East
Beltsville, MD 20705-2325
Ph: 301-504-9430
Fax: 301-504-8098
Internet: http://www.ams.usda.gov/lsg/seed.htm
e-mail: jeri.irwin@usda.gov

Order Other Publications from:
U.S. Department of Agriculture
14th and Independence Ave., SW, Room 4028-S
Washington, DC 20250
Ph: 202-720-2791
Fax: 202-720-2166
Internet: http://www.usda.gov

U.S. DEPARTMENT OF COMMERCE (DOC)
1401 Constitution Avenue, NW
Washington, DC 20230
Internet: http://www.commerce.gov/

Order Publications From:
National Technical Information Service
5285 Port Royal Road
Springfield, VA 22161
Ph: 703-605-6000
Fax: 703-605-6900
Internet: http://www.ntis.gov

U.S. DEPARTMENT OF DEFENSE (DOD)
Order DOD Documents from:
National Technical Information Service
5285 Port Royal Road
Springfield, VA 22161
Ph: 703-605-6000
FAX: 703-605-6900
Internet: http://www.ntis.gov

Order Military Specifications, Standards and Related Publications from:
Department of Defense Single Stock Point for (DODSSP)
Defense Automation and Production Service (DAPS)
Bldg 4D
700 Robbins AV
Philadelphia, PA 19111-5094
Ph: 215-697-2179
Fax: 215-697-1462
Internet: http://www.dodssp.daps.mil

U.S. DEPARTMENT OF HOUSING AND URBAN DEVELOPMENT (HUD)
Order from:
HUD User
P.O. Box 6091
Rockville, MD 20849
Ph: 800-245-2691
Fax: 301-519-5767
Internet: http://www.huduser.org
e-mail: Huduser@aspensys.com

U.S. DEPARTMENT OF STATE (SD)
2201 C Street, NW
Washington, DC 20520
Ph: 202-647-4000
Internet: http://www.state.gov

U.S. DEPARTMENT OF TRANSPORTATION (DOT)
400 7th Street, SW
Washington, DC 20590
PH: 202-366-4000

Internet: http://www.dot.gov

U.S. ENVIRONMENTAL PROTECTION AGENCY (EPA)
Ariel Rios Building
1200 Pennsylvania Avenue, N.W.
Washington, DC 20460
Ph: 202-260-2090
FAX: 202-260-6257
Internet: http://www.epa.gov

NOTE --- Some documents are available only from:
National Technical Information Services (NTIS)
5285 Port Royal Rd.
Springfield, VA 22161
Ph: 703-605-6000
Fax: 703-605-6900
Internet: http://www.ntis.gov

U.S. FEDERAL AVIATION ADMINISTRATION (FAA)
Order for sale documents from:
Superintendant of Documents
P.O. Box 371954
Pittsburgh, PA 15250-7954
PH: 202-512-1800 (order desk)
Internet: http://www.gpo.gov

Order free documents from:
Federal Aviation Administration
Dept. of Transportation
Ardmore East Business Center
33410 75th Avenue
Landover, MD 20785
Ph:
FAX: 301-386-5394

Internet: http://www.faa.gov

U.S. FEDERAL COMMUNICATIONS COMMISSION (FCC)
445 12th Street SW
Washington, DC 20554
Phone: 888-CALL-FCC
Fax: 202-418-0232
Internet: http://www.fcc.gov
E-mail: fccinfo@fcc.gov

U.S. FEDERAL EMERGENCY MANAGEMENT AGENCY (FEMA)
500 C Street, SW
Washington, D.C. 20472
Phone: 202-566-1600
Internet: http://www.fema.gov

U.S. FEDERAL HIGHWAY ADMINISTRATION (FHWA)

Office of Highway Safety (HHS-31)
400 Seventh St., SW
Washington, DC 20590-0001
Ph: 202-366-0411
Fax: 202-366-2249
Internet: http://www.fhwa.dot.gov
Order from:

Superintendant of Documents
U. S. Government Printing Office
732 North Capitol Street, NW
Mailstop: SDE
Washington, DC 20401
Ph: 866-512-1800 or 202-512-1800
Fax: 202-512-2250
Internet: http://www.gpo.gov

U.S. GENERAL SERVICES ADMINISTRATION (GSA)
General Services Administration
1800 F Street, NW
Washington, DC 20405
PH: 202-501-0705

Order from:
General Services Administration
Federal Supply Service Bureau
1941 Jefferson Davis Highway
Arlington, VA 22202
PH: 703-605-5400
Internet: http://www.fss.gsa.gov/pub/fed-specs.cfm

U.S. NATIONAL ARCHIVES AND RECORDS ADMINISTRATION (NARA)
700 Pennsylvania Avenue, N.W.
Washington, D.C. 20408
Phone: 866-325-7208
Internet: http://www.archives.gov

Order documents from:
Superintendent of Documents
U.S.Government Printing Office
732 North Capitol Street, NW
Washington, DC 20401
Mailstop: SDE
Ph: 866-512-1800 or 202-512-1800
Fax: 202-512-2250
Internet: http://www.gpo.gov
E-mail: gpoaccess@gpo.gov

U.S. NAVAL FACILITIES ENGINEERING COMMAND (NAVFAC)
1510 Gilbert St.
Norfolk, VA 23511-2699
Ph: 757-322-4200
Fax: 757-322-4416
Internet: http://www.efdlant.navfac.navy.mil/LANTOPS_15

U.S. NAVAL FACILITIES ENGINEERING SERVICE CENTER (NFESC)
1100 23rd Avenue
Port Hueneme, CA 93043-4370
Ph: 805-982-4980
Internet: http://www.nfesc.navy.mil

WATER ENVIRONMENT FEDERATION (WEF)
601 Wythe St.
Alexandria, VA 22314-1994
Ph: 703-684-2452
Fax: 703-684-2492
Internet: http://www.wef.org

WATER QUALITY ASSOCIATION (WQA)
4151 Naperville Rd.
Lisle, IL 60532
Ph: 630-505-0160
Fax: 630-505-9637
Internet: http://www.wqa.org
e-mail: info@mail.wqa.org

WEST COAST LUMBER INSPECTION BUREAU (WCLIB)
P.O. Box 23145
Portland, OR 97281
Ph: 503-639-0651
Fax: 503-684-8928
Internet: http://www.wclib.org
e-mail: info@wclib.org

WESTERN WOOD PRESERVERS INSTITUTE (WWPI)
7017 N.E. Highway 99 # 108
Vancover, WA 98665
Ph: 360-693-9958
Fax: 360-693-9967
Internet: http://www.wwpinstitute.org
e-mail: info@wwpinstitute.org

WESTERN WOOD PRODUCTS ASSOCIATION (WWPA)
Yeon Bldg.
522 SW 5th Ave.
Suite 500
Portland, OR 97204-2122
Ph: 503-224-3930
Fax: 503-224-3934
Internet: http://www.wwpa.org
e-mail: info@wwpa.org

WINDOW AND DOOR MANUFACTURERS ASSOCIATION (WDMA)
1400 East Touhy Ave., Suite 470

Des Plaines, IL 60018
Ph: 847-299-5200 or 800-223-2301
Fax: 708-299-1286
Internet: http://www.wdma.com
e-mail: admin@wdma.com

WOOD MOULDING AND MILLWORK PRODUCERS ASSOCIATION (WMMPA)
507 First Street
Woodland, CA 95695
Ph: 530-661-9591 or 800-550-7889
Fax: 530-661-9586
Internet: http://www.wmmpa.com

-- End of Section --

SECTION 01451A

CONTRACTOR QUALITY CONTROL
01/03

PART 1 GENERAL

1.1 REFERENCES

The publications listed below form a part of this specification to the extent referenced. The publications are referred to within the text by basic designation only.

ASTM INTERNATIONAL (ASTM)

ASTM D 3740	(2001) Minimum Requirements for Agencies Engaged in the Testing and/or Inspection of Soil and Rock as Used in Engineering Design and Construction
ASTM E 329	(2000b) Agencies Engaged in the Testing and/or Inspection of Materials Used in Construction

U.S. ARMY CORPS OF ENGINEERS (USACE)

ER 1110-1-12	Quality Management

1.2 PAYMENT

Separate payment will not be made for providing and maintaining an effective Quality Control program, and all costs associated therewith shall be included in the applicable unit prices or lump-sum prices contained in the Bidding Schedule.

PART 2 PRODUCTS (NOT APPLICABLE)

PART 3 EXECUTION

3.1 GENERAL REQUIREMENTS

The Contractor is responsible for quality control and shall establish and maintain an effective quality control system in compliance with the Contract Clause titled "Inspection of Construction." The quality control system shall consist of plans, procedures, and organization necessary to produce an end product which complies with the contract requirements. The system shall cover all construction design and construction operations, both onsite and offsite, and shall be keyed to the proposed construction sequence. The site project superintendent will be held responsible for the quality of work on the job and is subject to removal by the Contracting Officer for non-compliance with the quality requirements specified in the contract. The site project superintendent in this context shall be the highest level manager responsible for the overall construction activities at the site, including quality and production. The site project superintendent shall maintain a physical presence at the site at all times, except as otherwise acceptable to the Contracting Officer, and shall be responsible for all construction and construction related activities at the site.

3.2 QUALITY CONTROL PLAN

The Contractor shall furnish for review by the Government, not later than 7 days after receipt of notice to proceed, the Contractor Quality Control (CQC) Plan proposed to implement the requirements of the Contract Clause titled "Inspection of Construction." The plan shall identify personnel, procedures, control, instructions, tests, records, and forms to be used. The Government will consider an interim plan for the first 30 days of operation. ConstructionDesign and construction will be permitted to begin only after acceptance of the CQC Plan or acceptance of an interim plan applicable to the particular feature of work to be started. Work outside of the features of work included in an accepted interim plan will not be permitted to begin until acceptance of a CQC Plan or another interim plan containing the additional features of work to be started.

3.2.1 Content of the CQC Plan

The CQC Plan shall include, as a minimum, the following to cover all design and constructionconstruction operations, both onsite and offsite, including work by subcontractors, fabricators, suppliers, and purchasing agentssubcontractors, designers of record, consultants, architect/engineers (AE), fabricators, suppliers, and purchasing agents:

a. A description of the quality control organization, including a chart showing lines of authority and acknowledgment that the CQC staff shall implement the three phase control system for all aspects of the work specified. The staff shall include a CQC System Manager who shall report to the project superintendent.

b. The name, qualifications (in resume format), duties, responsibilities, and authorities of each person assigned a CQC function.

c. A copy of the letter to the CQC System Manager signed by an authorized official of the firm which describes the responsibilities and delegates sufficient authorities to adequately perform the functions of the CQC System Manager, including authority to stop work which is not in compliance with the contract. The CQC System Manager shall issue letters of direction to all other various quality control representatives outlining duties, authorities, and responsibilities. Copies of these letters shall also be furnished to the Government.

d. Procedures for scheduling, reviewing, certifying, and managing submittals, including those of subcontractors, offsite fabricators, suppliers, and purchasing agents subcontractors, designers of record, consultants, architect engineers (AE), offsite fabricators, suppliers, and purchasing agents. These procedures shall be in accordance with Section 01330 SUBMITTAL PROCEDURES.

e. Control, verification, and acceptance testing procedures for each specific test to include the test name, specification paragraph requiring test, feature of work to be tested, test frequency, and person responsible for each test. (Laboratory facilities approved by the Contracting Officer shall be used.)

f. Procedures for tracking preparatory, initial, and follow-up control phases and control, verification, and acceptance tests including documentation.

g. Procedures for tracking construction design and construction deficiencies from identification through acceptable corrective action. These procedures shall establish verification that identified deficiencies have been corrected.

h. Reporting procedures, including proposed reporting formats.

i. A list of the definable features of work. A definable feature of work is a task which is separate and distinct from other tasks, has separate control requirements, and may be identified by different trades or disciplines, or it may be work by the same trade in a different environment. Although each section of the specifications may generally be considered as a definable feature of work, there are frequently more than one definable features under a particular section. This list will be agreed upon during the coordination meeting.

3.2.2 Additional Requirements for Design Quality Control (DQC) Plan

The followng additional requirements apply to the Design Quality Control (DQC) plan:

(1) The Contractor's QCP Plan shall provide and maintain a Design Quality Control (DQC) Plan as an effective quality control program which will assure that all services required by this design-build contract are performed and provided in a manner that meets professional architectural and engineering quality standards. As a minimum, all documents shall be technically reviewed by competent, independent reviewers identified in the DQC Plan. The same element that produced the product shall not perform the independent technical review (ITR). The Contractor shall correct errors and deficiencies in the design documents prior to submitting them to the Government.

(2) The Contractor shall include the design schedule in the master project schedule, showing the sequence of events involved in carrying out the project design tasks within the specific contract period. This should be at a detailed level of scheduling sufficient to identify all major design tasks, including those that control the flow of work. The schedule shall include review and correction periods associated with each item. This should be a forward planning as well as a project monitoring tool. The schedule reflects calendar days and not dates for each activity. If the schedule is changed, the Contractor shall submit a revised schedule reflecting the change within 7 calendar days. The Contractor shall include in the DQC Plan the discipline-specific checklists to be used during the design and quality control of each submittal. These completed checklists shall be submitted at each design phase as part of the project documentation. Example checklists can be found in ER 1110-1-12.

(3) The DQC Plan shall be implemented by an Design Quality Control Manager who has the responsibility of being cognizant of and assuring that all documents on the project have been coordinated.

This individual shall be a person who has verifiable engineering or architectural design experience and is a registered professional engineer or architect. The Contractor shall notify the Contracting Officer, in writing, of the name of the individual, and the name of an alternate person assigned to the position.

The Contracting Officer will notify the Contractor in writing of the acceptance of the DQC Plan. After acceptance, any changes proposed by the Contractor are subject to the acceptance of the Contracting Officer.

3.2.3 Acceptance of Plan

Acceptance of the Contractor's plan is required prior to the start of construction design and construction. Acceptance is conditional and will be predicated on satisfactory performance during the construction design and construction. The Government reserves the right to require the Contractor to make changes in his CQC Plan and operations including removal of personnel, as necessary, to obtain the quality specified.

3.2.4 Notification of Changes

After acceptance of the CQC Plan, the Contractor shall notify the Contracting Officer in writing of any proposed change. Proposed changes are subject to acceptance by the Contracting Officer.

3.3 COORDINATION MEETING

After the Preconstruction Conference, before start of construction, Post award Conference, before start of design or construction, and prior to acceptance by the Government of the CQC Plan, the Contractor shall meet with the Contracting Officer or Authorized Representative and discuss the Contractor's quality control system. The CQC Plan shall be submitted for review a minimum of 5 calendar days prior to the Coordination Meeting. During the meeting, a mutual understanding of the system details shall be developed, including the forms for recording the CQC operations operations, design activities, control activities, testing, administration of the system for both onsite and offsite work, and the interrelationship of Contractor's Management and control with the Government's Quality Assurance. Minutes of the meeting shall be prepared by the Government and signed by both the Contractor and the Contracting Officer. The minutes shall become a part of the contract file. There may be occasions when subsequent conferences will be called by either party to reconfirm mutual understandings and/or address deficiencies in the CQC system or procedures which may require corrective action by the Contractor.

3.4 QUALITY CONTROL ORGANIZATION

3.4.1 Personnel Requirements

The requirements for the CQC organization are a CQC System Manager CQC System Manager, a Design Quality Manager, and sufficient number of additional qualified personnel to ensure safety and contract compliance. The Safety and Health Manager shall receive direction and authority from the CQC System Manager and shall serve as a member of the CQC staff. Personnel identified in the technical provisions as requiring specialized skills to assure the required work is being performed properly will also be included as part of the CQC organization. The Contractor's CQC staff shall maintain

a presence at the site at all times during progress of the work and have complete authority and responsibility to take any action necessary to ensure contract compliance. The CQC staff shall be subject to acceptance by the Contracting Officer. The Contractor shall provide adequate office space, filing systems and other resources as necessary to maintain an effective and fully functional CQC organization. Complete records of all letters, material submittals, shop drawing submittals, schedules and all other project documentation shall be promptly furnished to the CQC organization by the Contractor. The CQC organization shall be responsible to maintain these documents and records at the site at all times, except as otherwise acceptable to the Contracting Officer.

3.4.2 CQC System Manager

The Contractor shall identify as CQC System Manager an individual within the onsite work organization who shall be responsible for overall management of CQC and have the authority to act in all CQC matters for the Contractor. The CQC System Manager shall be a graduate engineer, graduate architect, or a graduate of construction management, with a minimum of 5 years construction experience on construction similar to this contract. Or a construction person with a minimum of 10 years in related work. This CQC System Manager shall be on the site at all times during construction and shall be employed by the prime Contractor. The CQC System Manager shall be assigned no other duties. An alternate for the CQC System Manager shall be identified in the plan to serve in the event of the System Manager's absence. The requirements for the alternate shall be the same as for the designated CQC System Manager.

3.4.3 CQC Personnel

In addition to CQC personnel specified elsewhere in the contract, the Contractor shall provide as part of the CQC organization specialized personnel to assist the CQC System Manager for the following areas: electrical, mechanical, civil. These individuals may be employees of the prime or subcontractor; be responsible to the CQC System Manager; be physically present at the construction site during work on their areas of responsibility; have the necessary education and/or experience in accordance with the experience matrix listed herein. These individuals may perform other duties but must be allowed sufficient time to perform their assigned quality control duties as described in the Quality Control Plan.

Experience Matrix

	Area	Qualifications
a.	Civil	Graduate Civil Engineer with 2 years experience in the type of work being performed on this project or technician with 5 yrs related experience
b.	Mechanical	Graduate Mechanical Engineer with 2 yrs experience or person with 5 yrs related experience
c.	Electrical	Graduate Electrical Engineer with 2 yrs

related experience or
person with 5 yrs
related experience

3.4.4 Additional Requirement

In addition to the above experience and/or education requirements the CQC System Manager shall have completed the course entitled "Construction Quality Management For Contractors". This course is periodically offered at Fort Stewart.

3.4.5 Organizational Changes

The Contractor shall maintain the CQC staff at full strength at all times. When it is necessary to make changes to the CQC staff, the Contractor shall revise the CQC Plan to reflect the changes and submit the changes to the Contracting Officer for acceptance.

3.5 SUBMITTALS AND DELIVERABLES

Submittals, if needed, shall be made as specified in Section 01330 SUBMITTAL PROCEDURES. The CQC organization shall be responsible for certifying that all submittals and deliverables are in compliance with the contract requirements. When Section 15950A HEATING, VENTILATING AND AIR CONDITIONING (HVAC) CONTROL SYSTEMS; 15951A DIRECT DIGITAL CONTROL FOR HVAC; 15990A TESTING, ADJUSTING, AND BALANCING OF HVAC SYSTEMS; or 15995A COMMISSIONING OF HVAC SYSTEMS are included in the contract, the submittals required by those sections shall be coordinated with Section 01330 SUBMITTAL PROCEDURES to ensure adequate time is allowed for each type of submittal required.

3.6 CONTROL

Contractor Quality Control is the means by which the Contractor ensures that the construction, to include that of subcontractors and suppliers, complies with the requirements of the contract. At least three phases of control shall be conducted by the CQC System Manager for each definable feature of the construction work as follows:

3.6.1 Preparatory Phase

This phase shall be performed prior to beginning work on each definable feature of work, after all required plans/documents/materials are approved/accepted, and after copies are at the work site. This phase shall include:

a. A review of each paragraph of applicable specifications, reference codes, and standards. A copy of those sections of referenced codes and standards applicable to that portion of the work to be accomplished in the field shall be made available by the Contractor at the preparatory inspection. These copies shall be maintained in the field and available for use by Government personnel until final acceptance of the work.

b. A review of the contract drawings.

c. A check to assure that all materials and/or equipment have been tested, submitted, and approved.

d. Review of provisions that have been made to provide required control inspection and testing.

e. Examination of the work area to assure that all required preliminary work has been completed and is in compliance with the contract.

f. A physical examination of required materials, equipment, and sample work to assure that they are on hand, conform to approved shop drawings or submitted data, and are properly stored.

g. A review of the appropriate activity hazard analysis to assure safety requirements are met.

h. Discussion of procedures for controlling quality of the work including repetitive deficiencies. Document construction tolerances and workmanship standards for that feature of work.

i. A check to ensure that the portion of the plan for the work to be performed has been accepted by the Contracting Officer.

j. Discussion of the initial control phase.

k. The Government shall be notified at least 48 hours in advance of beginning the preparatory control phase. This phase shall include a meeting conducted by the CQC System Manager and attended by the superintendent, other CQC personnel (as applicable), and the foreman responsible for the definable feature. The results of the preparatory phase actions shall be documented by separate minutes prepared by the CQC System Manager and attached to the daily CQC report. The Contractor shall instruct applicable workers as to the acceptable level of workmanship required in order to meet contract specifications.

3.6.2 Initial Phase

This phase shall be accomplished at the beginning of a definable feature of work. The following shall be accomplished:

a. A check of work to ensure that it is in full compliance with contract requirements. Review minutes of the preparatory meeting.

b. Verify adequacy of controls to ensure full contract compliance. Verify required control inspection and testing.

c. Establish level of workmanship and verify that it meets minimum acceptable workmanship standards. Compare with required sample panels as appropriate.

d. Resolve all differences.

e. Check safety to include compliance with and upgrading of the safety plan and activity hazard analysis. Review the activity analysis with each worker.

f. The Government shall be notified at least 24 hours in advance of beginning the initial phase. Separate minutes of this phase shall be prepared by the CQC System Manager and attached to the daily CQC report. Exact location of initial phase shall be indicated for future reference and comparison with follow-up phases.

g. The initial phase should be repeated for each new crew to work onsite, or any time acceptable specified quality standards are not being met.

3.6.3 Follow-up Phase

Daily checks shall be performed to assure control activities, including control testing, are providing continued compliance with contract requirements, until completion of the particular feature of work. The checks shall be made a matter of record in the CQC documentation. Final follow-up checks shall be conducted and all deficiencies corrected prior to the start of additional features of work which may be affected by the deficient work. The Contractor shall not build upon nor conceal non-conforming work.

3.6.4 Additional Preparatory and Initial Phases

Additional preparatory and initial phases shall be conducted on the same definable features of work if: the quality of on-going work is unacceptable; if there are changes in the applicable CQC staff, onsite production supervision or work crew; if work on a definable feature is resumed after a substantial period of inactivity; or if other problems develop.

3.7 TESTS

3.7.1 Testing Procedure

The Contractor shall perform specified or required tests to verify that control measures are adequate to provide a product which conforms to contract requirements. Upon request, the Contractor shall furnish to the Government duplicate samples of test specimens for possible testing by the Government. Testing includes operation and/or acceptance tests when specified. The Contractor shall procure the services of a Corps of Engineers approved testing laboratory or establish an approved testing laboratory at the project site. The Contractor shall perform the following activities and record and provide the following data:

a. Verify that testing procedures comply with contract requirements.

b. Verify that facilities and testing equipment are available and comply with testing standards.

c. Check test instrument calibration data against certified standards.

d. Verify that recording forms and test identification control number system, including all of the test documentation requirements, have been prepared.

e. Results of all tests taken, both passing and failing tests, shall be recorded on the CQC report for the date taken. Specification

paragraph reference, location where tests were taken, and the sequential control number identifying the test shall be given. If approved by the Contracting Officer, actual test reports may be submitted later with a reference to the test number and date taken. An information copy of tests performed by an offsite or commercial test facility shall be provided directly to the Contracting Officer. Failure to submit timely test reports as stated may result in nonpayment for related work performed and disapproval of the test facility for this contract.

3.7.2 Testing Laboratories

3.7.2.1 Capability Check

The Government reserves the right to check laboratory equipment in the proposed laboratory for compliance with the standards set forth in the contract specifications and to check the laboratory technician's testing procedures and techniques. Laboratories utilized for testing soils, concrete, asphalt, and steel shall meet criteria detailed in ASTM D 3740 and ASTM E 329.

3.7.2.2 Capability Recheck

If the selected laboratory fails the capability check, the Contractor may be assessed a charge to reimburse the Government for each succeeding recheck of the laboratory or the checking of a subsequently selected laboratory. Such costs will be deducted from the contract amount due the Contractor.

3.7.3 Onsite Laboratory

The Government reserves the right to utilize the Contractor's control testing laboratory and equipment to make assurance tests, and to check the Contractor's testing procedures, techniques, and test results at no additional cost to the Government.

3.7.4 Furnishing or Transportation of Samples for Testing

Costs incidental to the transportation of samples or materials shall be borne by the Contractor. Samples of materials for test verification and acceptance testing by the Government shall be delivered to a laboratory designated by the contracting officer.

Coordination for each specific test, exact delivery location, and dates will be made through the Area Office.

3.8 COMPLETION INSPECTION

3.8.1 Punch-Out Inspection

Near the end of the work, or any increment of the work established by a time stated in the S_PECIAL CONTRACT REQUIREMENTS Clause, "Commencement, Prosecution, and Completion of Work", or by the specifications, the CQC Manager shall conduct an inspection of the work. A punch list of items which do not conform to the approved drawings and specifications shall be prepared and included in the CQC documentation, as required by paragraph DOCUMENTATION. The list of deficiencies shall include the estimated date by which the deficiencies will be corrected. The CQC System Manager or staff shall make a second inspection to ascertain that all deficiencies have been

corrected. Once this is accomplished, the Contractor shall notify the Government that the facility is ready for the Government Pre-Final inspection.

3.8.2 Pre-Final Inspection

The Government will perform the pre-final inspection to verify that the facility is complete and ready to be occupied. A Government Pre-Final Punch List may be developed as a result of this inspection. The Contractor's CQC System Manager shall ensure that all items on this list have been corrected before notifying the Government, so that a Final inspection with the customer can be scheduled. Any items noted on the Pre-Final inspection shall be corrected in a timely manner. These inspections and any deficiency corrections required by this paragraph shall be accomplished within the time slated for completion of the entire work or any particular increment of the work if the project is divided into increments by separate completion dates.

3.8.3 Final Acceptance Inspection

The Contractor's Quality Control Inspection personnel, plus the superintendent or other primary management person, and the Contracting Officer's Representative shall be in attendance at the final acceptance inspection. Additional Government personnel including, but not limited to, those from Base/Post Civil Facility Engineer user groups, and major commands may also be in attendance. The final acceptance inspection will be formally scheduled by the Contracting Officer based upon results of the Pre-Final inspection. Notice shall be given to the Contracting Officer at least 14 days prior to the final acceptance inspection and shall include the Contractor's assurance that all specific items previously identified to the Contractor as being unacceptable, along with all remaining work performed under the contract, will be complete and acceptable by the date scheduled for the final acceptance inspection. Failure of the Contractor to have all contract work acceptably complete for this inspection will be cause for the Contracting Officer to bill the Contractor for the Government's additional inspection cost in accordance with the contract clause titled "Inspection of Construction".

3.9 DOCUMENTATION

The Contractor shall maintain current records providing factual evidence that required quality control activities and/or tests have been performed. These records shall include the work of subcontractors and suppliers and shall be on an acceptable form that includes, as a minimum, the following information:

a. Contractor/subcontractor and their area of responsibility.

b. Operating plant/equipment with hours worked, idle, or down for repair.

c. Work performed each day, giving location, description, and by whom. When Network Analysis (NAS) is used, identify each phase of work performed each day by NAS activity number.

d. Test and/or control activities performed with results and references to specifications/drawings requirements. The control

phase shall be identified (Preparatory, Initial, Follow-up). List of deficiencies noted, along with corrective action.

e. Quantity of materials received at the site with statement as to acceptability, storage, and reference to specifications/drawings requirements.

f. Submittals and deliverables reviewed, with contract reference, by whom, and action taken.

g. Offsite surveillance activities, including actions taken.

h. Job safety evaluations stating what was checked, results, and instructions or corrective actions.

i. Instructions given/received and conflicts in plans and/or specifications.

j. Contractor's verification statement.

These records shall indicate a description of trades working on the project; the number of personnel working; weather conditions encountered; and any delays encountered. These records shall cover both conforming and deficient features and shall include a statement that equipment and materials incorporated in the work and workmanship comply with the contract. The original and one copy of these records in report form shall be furnished to the Government daily within 24 hours after the date covered by the report, except that reports need not be submitted for days on which no work is performed. As a minimum, one report shall be prepared and submitted for every 7 days of no work and on the last day of a no work period. All calendar days shall be accounted for throughout the life of the contract. The first report following a day of no work shall be for that day only. Reports shall be signed and dated by the CQC System Manager. The report from the CQC System Manager shall include copies of test reports and copies of reports prepared by all subordinate quality control personnel.

3.10 SAMPLE FORMS

Sample forms enclosed at the end of this section.

3.11 NOTIFICATION OF NONCOMPLIANCE

The Contracting Officer will notify the Contractor of any detected noncompliance with the foregoing requirements. The Contractor shall take immediate corrective action after receipt of such notice. Such notice, when delivered to the Contractor at the work site, shall be deemed sufficient for the purpose of notification. If the Contractor fails or refuses to comply promptly, the Contracting Officer may issue an order stopping all or part of the work until satisfactory corrective action has been taken. No part of the time lost due to such stop orders shall be made the subject of claim for extension of time or for excess costs or damages by the Contractor.

-- End of Section --

SECTION 01500

TEMPORARY CONSTRUCTION FACILITIES

1.1 GENERAL REQUIREMENTS

1.1.1 Site Plan

The Contractor shall prepare a site mobilization plan indicating the proposed location and dimensions of any area to be fenced and used by the Contractor, the location of the project sign, the number of trailers to be used, avenues of ingress/egress to the fenced area and details of the fence installation, and submit the plan to the Contracting Officer for approval prior to mobilization on the site. Any areas which may have to be graveled to prevent the tracking of mud shall also be identified. The Contractor shall also indicate if the use of a supplemental or other staging area is desired.

1.1.2 Excavation Permits

Excavation permits will require 1 week's advance written notice and will be subject to the Contracting Officer's approval. Notice shall be accompanied with a sketch showing the location of the proposed excavation.

1.1.3 Identification of Employees

Reference: 3d ID (M) FSGA/HAAF – Vehicle Pre-Registration Packet for Contractors, dated 13 Jun 01.

All personnel shall have badges and vehicle passes or decals to enter the installation. Badges will be required to be worn at all times while on the installation. Decals will be required to enter the installation or the driver will be required to go to the MP station for a permit which will require drivers license, proof of insurance, contract number, and point of contact for Contractor before being allowed to enter.

This military installation requires the following information to remain on file throughout the life of this contract. The Contractor shall provide the following information to the Contracting Officer at the Pre-work and/or Pre-Construction meeting:

Contract Number
Contractor Name
Contractor Mailing Address
POC for Contractor (Name and Phone No.)
POC for Contract (Corps of Engineers) (Name and Phone No.)
Installation to which the contractor needs access (Hunter AAF or Fort Stewart)

This requirement applies to Construction firms, Design/AE firms, Consultants and Studies firms, and all subcontractors, suppliers, and vendors. Identification shall immediately be delivered to the Contracting Officer for cancellation upon release of any employee.

Procedure for obtaining employee ID cards:

Contractor provides the specified information to the Resident Engineer at the Preconstruction Conference: Contract Number, Contractor Name, Contractor Mailing Address, POC for Contractor (name and phone no.), and POC for Contract (Corps of Engineers)(name and phone no.)

Contractor prepares a letter to HQ, 3rd Infantry Division (Mechanized) and Fort Stewart, Attention: Director of Contracting (Ms. Bernice Harper), 1042 William H. Wilson Avenue, Suite 219, Fort Stewart, GA 31314-3324. The letter must include the information and data as indicated in the sample letter included in the reference. Enclosures must include a personnel roster. The purpose of this letter is to verify that the Contractor has a contract on post and for how long.

Contractor prepares a letter to HQ, 3rd Infantry Division (Mechanized) and Fort Stewart, Attention: Civilian Personnel Advisory Center (Ms. Karen Bandera), 101 West Bultman Avenue, Suite 100, Fort Stewart, GA 31314-3324. This letter must include the information and data as indicated in the sample letter included in the reference. Enclosures must include employee information for Contractor personnel. The purpose of this letter is for the preparation of ID cards for employees. CPAC suggests that 4 or 5 people in groups every couple of hours go to pick up their ID cards.

Procedure for obtaining vehicle registration:

Individual employee proceeds to the vehicle registration building with written certification from the Contractor that the individual is an employee of the Contractor and that the vehicle registration is required. Vehicle registration for Fort Stewart is Building 285; vehicle registration for Hunter AAF is Building 1240.

Data needed for vehicle registration: drivers license, proof of insurance, State vehicle registration, special power of attorney (to register a vehicle for a person whose name does not appear on the State vehicle registration).

1.1.3 Employee Parking

Contractor employees shall park privately owned vehicles in an area designated by the Contracting Officer. This area will be within the area construction limits. Contractor employee parking shall not interfere with existing and established parking requirements of the military installation.

1.2 AVAILABILITY AND USE OF UTILITY SERVICES

1.2.1 Payment for Utility Services

The Government will make all reasonably required utilities available to the Contractor from existing outlets and supplies, as specified in the contract. Unless otherwise provided in the contract, the amount of each utility service consumed shall be charged to or paid for by the Contractor at prevailing rates charged to the Government or, where the utility is produced by the Government, at reasonable rates determined by the Contracting Officer. The Contractor shall carefully conserve any utilities furnished without charge.

1.2.2 Meters and Temporary Connections

The Contractor, at his expense and in a manner satisfactory to the Contracting Officer, shall provide and maintain necessary temporary connections, distribution lines, meters and meter bases required to measure the amount of each utility used. The Contractor shall submit his proposed temporary power installation, including meter, meter base, and tie-in, to the Contracting Officer for review prior to installation. The Contractor shall notify the Contracting Officer, in writing, 5 working days before electrical connection is desired so that a utilities contract can be established.

The Contractor shall perform a weekly electrical inspection, by a qualified electrician, for all temporary electrical service and provide a report to the Contracting Officer.

1.2.3 Advance Deposit

An advance deposit for utilities consisting of an estimated month's usage or a minimum of $50.00 will be required. The last monthly bills for the fiscal year will normally be offset by the deposit and adjustments will be billed or returned as appropriate. Services to be rendered for the next fiscal year, beginning 1 October, will require a new deposit. Notification of the due date for this deposit will be mailed to the Contractor prior to the end of the current fiscal year.

1.2.4 Final Meter Reading

Before completion of the work and final acceptance of the work by the Government, the Contractor shall notify the Contracting Officer, in writing, 5 working days before termination is desired. The Government will take a final meter reading. The Contractor shall then remove all the temporary distribution lines, meter and meter bases, and associated paraphernalia. The Contractor shall pay all outstanding utility bills before final acceptance of the work by the Government.

The amount of electric power consumed by the Contractor after permanent power connection (for Contractor use in testing, heating/cooling and lighting) shall be estimated by the Government, and the Contractor will be advised of the estimated kwh consumed monthly.

1.2.5 Sanitation

The Contractor shall provide and maintain within the construction area minimum field-type sanitary facilities approved by the Contracting Officer. Government toilet facilities will not be available to Contractor's personnel.

1.2.6 Telephone

The Contractor shall make arrangements and pay all costs for telephone facilities desired with off post providers.

1.3 BULLETIN BOARD, PROJECT SIGN, AND PROJECT SAFETY SIGN

1.3.1 Bulletin Board

Immediately upon beginning of work, the Contractor shall provide a weatherproof glass-covered bulletin board not less than 36 by 48 inches in size for displaying the Equal Employment Opportunity poster, a copy of the wage decision contained in the contract, Wage Rate Information poster, and other information approved by the Contracting Officer. The bulletin board shall be located at the project site in a conspicuous place easily accessible to all employees, as approved by the Contracting Officer. Legible copies of the aforementioned data shall be displayed until work is completed. Upon completion of work the bulletin board shall be removed by and remain the property of the Contractor.

1.3.2 Project Signs

The Contractor shall furnish and install a project sign at the location selected by the Contracting Officer. The wording on the project sign shall be approved by the Contracting Officer. The project sign shall be painted on 1/2 inch thick exterior grade plywood. The sign layout shall be in accordance with the graphic format shown in Attachment 1 to Section 00800. The 4' by 4' right-hand section shall be painted white (Color No. 37875, Fed. Std. 595a) with black (Color No. 37038, Fed. Std. 595a) lettering. The 2' by 4' left-hand section shall be painted red (Color No. 12199, Fed. Std. 595a) with white lettering.

Eight additional signs of similar construction and finish shall be furnished and installed at locations selected by the Contracting Officer. These signs shall be 36 inches wide, 15 inches high, with red letters 2 inches high on a white background and shall read as follows:

"OFF LIMITS TO UNAUTHORIZED PERSONNEL"

1.4 PROTECTION AND MAINTENANCE OF TRAFFIC

During construction the Contractor shall provide access and temporary relocated roads as necessary to maintain traffic. The Contractor shall maintain and protect traffic on all affected roads during the construction period except as otherwise specifically directed by the Contracting Officer. Measures for the protection and diversion of traffic, including the provision of watchmen and flagmen, erection of barricades, placing of lights around and in front of equipment and the work, and the erection and maintenance of adequate warning, danger, and direction signs, shall be as required by the State and local authorities having jurisdiction. The traveling public shall be protected from damage to person and property. The Contractor's traffic on roads selected for hauling material to and from the site shall interfere as little as possible with public traffic. The Contractor shall investigate the adequacy of existing roads and the allowable load limit on these roads. The Contractor shall be responsible for the repair of any damage to roads caused by construction operations.

1.4.1 Haul Roads

The Contractor will be required to use the haul routes shown on the plans unless otherwise permitted in writing by the Contracting Officer.

Contractor shall maintain haul routes to and from the job sites and the borrow pits, to include the borrow pit. In addition it is the contractor’s responsibility to meet all Local, State and Federal regulations for the operation of a borrow pit. Contractor shall control runoff and erosion on all excavation and backfilling operations on the job site and borrow area. Any damage to existing pavement and structures shall be repaired by the contractor at no additional charge to the government. The contractor must comply with the DPW requirements for use of borrow pits. The Contractor shall maintain the haul routes and shall keep the dust problem under control by wetting the surface as needed. Sweeping and cleaning of pavements will be done as necessary to remove spillage resulting from the hauling operations. After all hauling has been completed, the Contractor shall restore the earth areas used for the haul routes to original condition by final grading, shaping, compacting, and grassing, and shall clean and sweep all paved areas as required. If any pavement is damaged as a result of hauling operations under this Contract, the Contractor, as approved by the Contracting Officer, shall promptly repair the pavement. The cost of maintenance and repair of the haul routes, as mentioned above, shall be considered as a subsidiary obligation of the Contractor. The axle load of earth hauling equipment operating on paved streets shall not exceed 12,000 pounds.

1.4.2 Barricades

The Contractor shall erect and maintain temporary barricades to limit public access to hazardous areas. Such barricades shall be required whenever safe public access to paved areas such as roads, parking areas or sidewalks is prevented by construction activities or as otherwise necessary to ensure the safety of both pedestrian and vehicular traffic. Barricades shall be securely placed, clearly visible with adequate illumination to provide sufficient visual warning of the hazard during both day and night.

1.5 CONTRACTOR'S TEMPORARY FACILITIES

1.5.1 Administrative Field Offices

The Contractor shall provide and maintain administrative field office facilities within the construction limits at the project site. Government office and warehouse facilities will not be available to the Contractor.

1.5.2 Storage Area

The Contractor shall construct a temporary 6-foot high chain link fence around trailers and materials. The fence shall include plastic strip inserts, colored brown, so that visibility through the fence is obstructed. Fence posts may be driven, in lieu of concrete bases, where soil conditions permit. Trailers, materials, or equipment shall not be placed or stored outside the fenced area unless such trailers, materials, or equipment are assigned a separate and distinct storage area by the Contracting Officer away from the vicinity of the construction site but within the military boundaries. Trailers, equipment, or materials shall not be open to public view with the exception of those items that are in support of ongoing work on any given day. Materials shall not be stockpiled outside the fence in preparation for the next day's work. Mobile equipment, such as tractors, wheeled lifting equipment, cranes, trucks, and like equipment, shall be parked within the fenced area at the end of each workday.

1.5.3 Supplemental Storage Area

Upon the Contractor's request, the Contracting Officer will designate another or supplemental area (if available) for the Contractor's use and storage of trailers, equipment, and materials. This area may not be in close proximity of the construction site but shall be within the military boundaries. Fencing of materials or equipment will be required at this site; and the Contractor shall be responsible for cleanliness and orderliness of the area used and for the security of any material or equipment stored in this area. The Government will not provide utilities to this area.

1.5.4 Appearance of Trailers

Trailers utilized by the Contractor for administrative or material storage purposes shall present a clean and neat exterior appearance and shall be in a state of good repair. Trailers that, in the opinion of the Contracting Officer, require exterior painting or maintenance will not be allowed on the military property.

1.5.5 Maintenance of Storage Area

Fencing shall be kept in a state of good repair and proper alignment. Should the Contractor elect to traverse, with construction equipment or other vehicles, grassed or unpaved areas which are not established roadways, such areas shall be covered with a layer of gravel as necessary to prevent rutting and the tracking of mud onto paved or established roadways; gravel gradation shall be at the Contractor's discretion. Grass located within the boundaries of the construction site shall be mowed for the duration of the project. Grass and vegetation along fences, buildings, under trailers, and in areas not accessible to mowers shall be edged or trimmed neatly.

1.5.6 Deleted

1.5.7 Security Provisions

Adequate outside security lighting shall be provided at the Contractor's temporary facilities. The Contractor shall be responsible for the security of its own equipment; in addition, the Contractor shall notify the appropriate law enforcement agency requesting periodic security checks of the temporary project field office.

1.5.8 Utilities

All utilities will be metered and paid for by the Contractor.

Rates to Charge Contractor: Water: $.7585 per 1000 Gallons
Electricity: $.0779 per KWH
Sewer: $1.5433 per 1000 gallons

1.6 PLANT COMMUNICATION

Whenever the Contractor has the individual elements of its plant so located that operation by normal voice between these elements is not satisfactory, the Contractor shall install a satisfactory means of communication, such as telephone or other suitable devices. The devices shall be made available for use by Government personnel.

1.7 TEMPORARY PROJECT SAFETY FENCING

As soon as practicable, but not later than 15 days after the date established for commencement of work, the Contractor shall furnish and erect temporary project safety fencing at the work site. The safety fencing shall be a high visibility orange colored, high density polyethylene grid or approved equal, a minimum of 42 inches high, supported and tightly secured to steel posts located on maximum 10 foot centers, constructed at the approved location. The safety fencing shall be maintained by the Contractor during the life of the contract and, upon completion and acceptance of the work, shall become the property of the Contractor and shall be removed from the work site.

1.8 PARTNERING

Within 60 calendar days after NTP, the Government intends to propose a voluntary partnering relationship with the Contractor. This partnering relationship will attempt to draw on strengths of each organization to facilitate communications and minimize delays to achieve a quality product, within budget, and on schedule. Participation in such partnering activities may include attendance at weekly coordination meetings with the Government and cooperation in other efforts to promote the partnering relationship. The Government and the Contractor will each bear their own costs for participation in the partnering relationship, with no change in the contract price. Participation will not result in any change in the terms or price of the contract.

1.9 INITIAL MEETING WITH THE CONTRACTOR, MODIFICATION MARKUPS

An Initial Meeting shall be held between the Contractor and the Contracting Officer not later than 60 days after NTP, but prior to the first modification on the Contract, to establish markups for modifications. Major subcontractors should participate also. A followup meeting shall be held every 6 months, or when significant changes occur in the Contractor's or any major subcontractor's financial status. The Contractor shall provide his detailed breakdown of his various costs and markups. A copy of a company audit, within the last 12 months, is desirable.

The following costs are to be discussed:

Home Office Overhead or General & Administrative (G&A) costs: These are costs that the Contractor must incur to support all their field construction projects and their home office operations. G&A is usually expressed as a percentage of total direct costs for all contracts awarded to the contractor. Such costs must be in accordance with the costs elements that are allowable in FAR Part 31.

Field Office Overhead or General Conditions costs: These are costs that the Contractor must incur at the job site to manage the specific project, and any other costs directly attributable to the project, but not attributable to any one activity of the project. The Contractor's field office overhead costs generally will not increase unless the Contractor is delayed or the Contract time is extended. Field office overhead is generally expressed as a daily cost or daily rate. Such costs must be in accordance with the costs elements that are allowable in FAR Part 31.

Labor Burden: This rate is a percentage markup on direct labor costs, and it accounts for the taxes and insurance that the Contractor must pay on all labor costs. Typically this includes: Workmen's Compensation, Employer's Liability Costs, Unemployment Insurance, and Social Security. Labor burden can vary depending on the efficiency and safety record of the Contractor, and the trade involved.

Bond Premium: This rate is a percentage markup on total costs, and accounts for an increase in payment and performance bond premiums based on an increase in the Contract price.

1.10 INSTALLATION REGULATIONS

The employees of the Contractor will be required to abide by all installation regulations as published by the Commanding Officer. A copy of these regulations can be obtained from the Area/Resident Engineer at the installation. All costs in connection therewith shall be included in the Contract price for the work.

1.11 TESTING LABORATORIES

Testing is required by the Contractor as part of his Quality Control Plan to verify Contract compliance. This Quality Control Testing is to be conducted by a project or commercial laboratory that has been found adequate and qualified by a Corps of Engineers Laboratory Inspection Team.

1.11.1 Approved Testing Laboratories

A composite listing of approved testing laboratories within the South Atlantic Division is available upon request. The Contractor should engage the services of a laboratory contained in the composite list. Contractors may obtain the list by calling (912) 652-5094 or (912) 652-5244. Fax requests can be made to Doug Saxon at (912) 652-6016.

1.11.2 Other Laboratory Services

The Contractor may engage the services of a laboratory other than those approved by a Corps of Engineers Laboratory Inspection Team if they comply with the following:

a. The Contractor identifies and proposes the unapproved laboratory a minimum of 90 days prior to the start of testing. This time is necessary to allow for scheduling an inspection by a Corps of Engineers team. The time for Government inspection will not be the basis for an increase in the Contract performance period.

b. All costs of Government inspection shall be the responsibility of the Contractor.

c. The Contractor may request Government inspection and approval prior to award by forwarding a written request to the Contracting Officer.

1.12 CONTAMINATION

1.12.1 Site Evaluation

The job site has been evaluated for potential site contamination. See RFP Sections 01020 and 01110 for more information.

1.12.2 Contractual Responsibilities of All Parties in the Event of Encounter with Contamination

If the Contractor encounters materials or conditions which indicate that there may be contamination on the site, the Contractor shall stop all work on the job site and report the discovery of the contaminants to the Contracting Officer's Representative (COR). The COR, will issue a written order to the Contractor to resume work or to suspend, delay, or interrupt all or any part of the work of this contract for the period of time that the Contracting Officer determines appropriate for the convenience of the Government as provided in FAR 52.212-12 - SUSPENSION OF WORK. The Government will be responsible for making an assessment of the contaminated site if this course of action is determined to be appropriate. After the assessment has been completed, the Government reserves the right to the following courses of action:

a. Direct the Contractor to resume work.

b. Clean up the contaminated site prior to directing the Contractor to resume work. The COR will determine whether the cleanup is to be accomplished by others or the Contractor.

c. Relocate the project site.

d. Terminate the contract for the convenience of the Government as provided in FAR 52.249-1 - TERMINATION FOR CONVENIENCE OF THE GOVERNMENT (FIXED-PRICE) (SHORT FORM) or FAR 52.249-2 - TERMINATION FOR CONVENIENCE OF THE GOVERNMENT (FIXED-PRICE) - ALTERNATE I as applicable.

1.13 CONSTRUCTION SCHEDULE RESTRAINTS – HUNTER AIRFIELD, GA.

1.13.1 Not used.

1.13.2 Protection

The Contractor is responsible to provide such covering, shields and barricades as are required to protect adjacent buildings, facilities, and sites, etc. from dust, debris, weather intrusion, water, moisture or other cause of damage resulting from construction.

1.13.3 Phasing and Sequence

1.13.3.1 General

In addition to the submittals required by clause SCHEDULES FOR CONSTRUCTION CONTRACTS (see SECTION 00800, FAR 52.236-15) and Section 01320A, PROJECT SCHEDULE, the Contractor shall submit for approval a summary work schedule setting forth schedule dates for initiation and completion of construction in each work area. No work shall be performed prior to approval of this

schedule and all work shall be performed in strict adherence thereto. If departures from this schedule appear to be required or desired, the Contracting Officer shall be promptly notified and his approval will be required prior to implementation of said departure(s).

1.13.3.2 Not used.

1.13.4 Time of Performance

The work schedule should be 7:30 AM to 4:00 PM., unless otherwise approved by the Contracting Officer. Requests to work during other than these normal hours shall be made in writing at least 36 hours in advance. For example, a request to work on a Saturday shall be submitted no later than Thursday at noon.

1.13.5 Outages

Contractor's work requiring outages of utility systems or building systems will require 14 calendar days advance notice and will be subject to the approval of the Contracting Officer. Notice shall include type of outage, date, and time outage will commence and estimated duration of outage.

1.13.6 Continuity

All tools, labor and materials required to complete any item of work within a given work area or requiring an outage of any building utility or system, shall be available at the site prior to commencement thereof. Once work has commenced on an item of work, said work shall be continuously and diligently performed to completion and acceptance.

1.13.7 Road and/or Railroad Closures

Road and/or railroad closures will require 2 weeks' advance written notice and be subject to the Contracting Officer's approval. Notice shall state reason for closure, date and time closure will commence, and estimated duration of closure. A sketch shall be provided showing location of the closure area and placement of barricades and signs. Closures shall be limited to a maximum of 5 calendar days.

1.13.8 Entry

Entry to all areas shall be coordinated with the Contracting Officer. All trucks entering the post shall utilize the Montgomery Street Gate.

1.13.9 Fire Zone

The Contractor is required to provide 72-hour notice to the Contracting Officer prior to the final programming of the fire zone information at the main fire station.

1.13.10 Excavated Debris

All excavated debris will be hauled off post. No landfills are available on Fort Stewart or Hunter Army Airfield.

1.14 REQUEST FOR INFORMATION (RFI) SYSTEM

The Government has developed an electronic database, the Request for Information (RFI) System, to track and answer Contractor questions and requests for information and clarification during construction. The use of the RFI System for all requests (the Contractor's as well as the subcontractors'/suppliers') is a contractual requirement for this project. The Contractor will enter the system over the Internet using any WEB browser and any Internet service provider. The Government will provide the Contractor a user identification and password for the system that will only allow the Contractor to enter and view the requests for this project. The Contractor will provide the Government the E-mail address for the individual(s) inputting into the system in order that E-mail messages can be sent from the Government to the Contractor indicating a response to the request. The Government will provide training in the use of the system. The Contractor will enter all requests indicating the question, recommended solution (if applicable), and needed response date. The Government will be notified through an E-mail message that the Contractor has entered a request into the system. When the Government has answered the request, an E-mail message will be sent to the Contractor, informing the Contractor that the answer to the request is in the system. The Contractor will enter the system to retrieve the answer using the same procedure to enter the question. The RFI System assigns a unique number to each request. The Contractor will not be reimbursed separately for the required use of this system. The Contractor shall include any costs associated with the use of this system into the appropriate bid item.

1.15 PROGRESS PHOTOGRAPHS

The Contractor shall, during the progress of the project, furnish the Contracting Officer progress digital photographs to depict progress of construction. The photographs shall be taken between the 1st and 5th day of each month and be delivered to the Contracting Officer not later than the 20th day of the same month taken. The photographs shall be taken from not less than ten positions for each month as selected by the Contracting Officer. They shall show, inasmuch as practicable, work accomplished during the previous month. Each photograph shall be identified showing date made, Contract title and number, and a brief description of work depicted, and shall be sequentially numbered. No separate payment will be made for these services and all costs in connection therewith shall be considered incidental to costs of the overall project.

1.16 CLEANUP

Construction debris, waste materials, packaging material and the like shall be removed from the work site daily. Any dirt or mud that is tracked onto paved or surfaced roadways shall be cleaned away. Materials resulting from demolition activities that are salvageable shall be stored within the fenced area described above or at the supplemental storage area. Stored material not in trailers, whether new or salvaged, shall be neatly stacked when stored.

1.17 RESTORATION OF STORAGE AREA

Upon completion of the project and after removal of trailers, materials, and equipment from within the fenced area, the fence shall be removed and will

become the property of the Contractor. Areas used by the Contractor for the storage of equipment or material, or other use, shall be restored to the original or better condition. Gravel used to traverse grassed areas shall be removed and the area restored to its original condition, including topsoil and seeding as necessary.

--End of Section--

SECTION 01780A

CLOSEOUT SUBMITTALS
05/02

PART 1 GENERAL

1.1 SUBMITTALS

Government approval is required for submittals with a "G" designation; submittals not having a "G" designation are for information only. When used, a designation following the "G" designation identifies the office that will review the submittal for the Government. The following shall be submitted in accordance with Section 01330 SUBMITTAL PROCEDURES:

SD-02 Shop Drawings

As-Built Drawings;G

Drawings showing final as-built conditions of the project. The final CADD as-built drawings shall consist of one set of electronic CADD drawing files in the specified format, two sets of black-line prints, and one set of the approved working as-built drawings.

SD-03 Product Data

As-Built Record of Equipment and Materials;G

Two copies of the record listing the as-built materials and equipment incorporated into the construction of the project.

Warranty Management Plan;G

Two sets of the warranty management plan containing information relevant to the warranty of materials and equipment incorporated into the construction project, including the starting date of warranty of construction. The Contractor shall furnish with each warranty the name, address, and telephone number of each of the guarantor's representatives nearest to the project location.

Warranty Tags

Two record copies of the warranty tags showing the layout and design.

Final Cleaning

Two copies of the listing of completed final clean-up items.

1.2 PROJECT RECORD DOCUMENTS

1.2.1 As-Built Drawings

This paragraph covers as-built drawings complete, as a requirement of the contract. The terms "drawings," "contract drawings," "drawing files," "working as-built drawings" and "final as-built drawings" refer to contract drawings which are revised to be used for final as-built drawings to be done electronically in microstation J.

1.2.1.1 Government Furnished Materials

Two sets of paper drawings revised to reflect all bid amendments will be provided by the Government at the preconstruction conference for markup of as-built conditions. Electronic CADD files in Microstation format will be provided by the Government at the preconstruction conference for updating CADD file as-built drawings.

1.2.1.2 Working As-Built and Final As-Built Drawings

The Contractor shall revise two sets of paper drawings by red-line process to show the as-built conditions during the prosecution of the project. These working as-built marked drawings shall be kept current on a weekly basis and at least one set shall be available on the jobsite at all times. Changes from the contract plans which are made in the work or additional information which might be uncovered in the course of construction shall be accurately and neatly recorded as they occur by means of details and notes. Final as-built drawings shall be prepared after the completion of each definable feature of work as listed in the Contractor Quality Control Plan (Foundations, Utilities, Structural Steel, etc., as appropriate for the project). The working as-built marked prints and final as-built drawings will be jointly reviewed for accuracy and completeness by the Contracting Officer and the Contractor prior to submission of each monthly pay estimate. If the Contractor fails to maintain the working and final as-built drawings as specified herein, the Contracting Officer will deduct from the monthly progress payment an amount representing the estimated cost of maintaining the as-built drawings. This monthly deduction will continue until an agreement can be reached between the Contracting Officer and the Contractor regarding the accuracy and completeness of updated drawings. The working and final as-built drawings shall show, but shall not be limited to, the following information:

a. The actual location, kinds and sizes of all sub-surface utility lines. In order that the location of these lines and appurtenances may be determined in the event the surface openings or indicators become covered over or obscured, the as-built drawings shall show, by offset dimensions to two permanently fixed surface features, the end of each run including each change in direction. Valves, splice boxes and similar appurtenances shall be located by dimensioning along the utility run from a reference point. The average depth below the surface of each run shall also be recorded.

b. The location and dimensions of any changes within the building structure.

c. Correct grade, elevations, cross section, or alignment of roads, earthwork, structures or utilities if any changes were made from contract plans.

d. Changes in details of design or additional information obtained from working drawings specified to be prepared and/or furnished by the Contractor; including but not limited to fabrication, erection, installation

plans and placing details, pipe sizes, insulation material, dimensions of equipment foundations, etc.

e. The topography, invert elevations and grades of drainage installed or affected as part of the project construction.

f. Changes or modifications which result from the final inspection.

g. Where contract drawings or specifications present options, only the option selected for construction shall be shown on the final as-built prints.

h. If borrow material for this project is from sources on Government property, or if Government property is used as a spoil area, the Contractor shall furnish a contour map of the final borrow pit/spoil area elevations.

i. Systems designed or enhanced by the Contractor, such as HVAC controls, fire alarm, fire sprinkler, and irrigation systems.

j. Modifications (change order price shall include the Contractor's cost to change working and final as-built drawings to reflect modifications) and compliance with the following procedures.

(1) Directions in the modification for posting descriptive changes shall be followed.

(2) A Modification Circle shall be placed at the location of each deletion.

(3) For new details or sections which are added to a drawing, a Modification Circle shall be placed by the detail or section title.

(4) For minor changes, a Modification Circle shall be placed by the area changed on the drawing (each location).

(5) For major changes to a drawing, a Modification Circle shall be placed by the title of the affected plan, section, or detail at each location.

(6) For changes to schedules or drawings, a Modification Circle shall be placed either by the schedule heading or by the change in the schedule.

(7) The Modification Circle size shall be 12.7 mm (1/2 inch) diameter unless the area where the circle is to be placed is crowded. Smaller size circle shall be used for crowded areas.

1.2.1.3 Drawing Preparation

The as-built drawings shall be modified as may be necessary to correctly show the features of the project as it has been constructed by bringing the contract set into agreement with approved working as-built prints, and adding such additional drawings as may be necessary. These working as-built marked prints shall be neat, legible and accurate. These drawings are part of the permanent records of this project and shall be returned to the Contracting Officer after approval by the Government. Any drawings damaged

or lost by the Contractor shall be satisfactorily replaced by the Contractor at no expense to the Government.

1.2.1.4 Computer Aided Design and Drafting (CADD) Drawings

Only personnel proficient in the preparation of CADD drawings shall be employed to modify the contract drawings or prepare additional new drawings. Additions and corrections to the contract drawings shall be equal in quality and detail to that of the originals. Line colors, line weights, lettering, layering conventions, and symbols shall be the same as the original line colors, line weights, lettering, layering conventions, and symbols. If additional drawings are required, they shall be prepared using the specified electronic file format applying the same graphic standards specified for original drawings. The title block and drawing border to be used for any new final as-built drawings shall be identical to that used on the contract drawings. Additions and corrections to the contract drawings shall be accomplished using CADD files. The Contractor will be furnished "as-designed" drawings in Microstation J format compatible with a Windows NT 2000 operating system or Windows XP. The electronic files will be supplied on compact disc, read-only memory (CD-ROM). The Contractor shall be responsible for providing all program files and hardware necessary to prepare final as-built drawings. The Contracting Officer will review final as-built drawings for accuracy and the Contractor shall make required corrections, changes, additions, and deletions.

a. Corrections shall be made in the "Model" files rather than the individual sheet file when model files are referenced. Once the model file is corrected the individual sheet file will automatically be corrected.

b. The contractor shall modify the drawings at construction completion to indicate the as-built character of all site components:

(1) These drawings will conform to the level symbology of the model files and be free of any superfluous construction detail. The intent is to show As-Built conditions and should not include any components that are not as-built, i.e., if the pre-work map showed a water line 3' from a curb and was constructed 4' from the curb, the as-built map will show only the final location of the water line.

(2) The grading model file will clearly indicate the final grade of the site at a contour interval not greater than one foot.

(3) The final inverts of all utilities will be shown on the model files. Where utilities were installed which follow the surface of the ground, the depth of that utility will be indicated. Where there is a variance in the depth of the utility, the break point and character of variance will be shown.

(4) The model files will clearly identify all utilities installed with a trace wire and/or cathodic protection.

(5) The model files will show a minimum of two tie points for all subsurface control devices to include valves, manholes, handholes, switches, etc. The tie-points will be directed such that they form a triangle with no inclusive angle less than 30 or greater than 150. No leg of the triangle will be longer than 100'. Valid tie-

points will run to identifiable above ground objects such as poles or building corners as is in keeping of good survey practice for the recovery of monuments.

(6) The model files will clearly indicate the entry point and character of all utilities running to or from structures.

c. When final revisions have been completed, the cover sheet drawing shall show the wording "RECORD DRAWING AS-BUILT" followed by the name of the Contractor in letters at least 5 mm (3/16 inch) high. All other contract drawings shall be marked either "AS-Built" drawing denoting no revisions on the sheet or "Revised As-Built" denoting one or more revisions. Original contract drawings shall be dated in the revision block.

d. Within 10 days for contracts less than $5 million or 20 days for contracts $5 million and above after Government approval of all of the working as-built drawings for a phase of work, the Contractor shall prepare the final CADD as-built drawings for that phase of work and submit two sets of blue-lined prints of these drawings for Government review and approval. The Government will promptly return one set of prints annotated with any necessary corrections. Within 7 days for contracts less than $5 million or 10 days for contracts $5 million and above the Contractor shall revise the CADD files accordingly at no additional cost and submit one set of final prints for the completed phase of work to the Government. Within 10 days for contracts less than $5 million or 20 days for contracts $5 million and above of substantial completion of all phases of work, the Contractor shall submit the final as-built drawing package for the entire project. The submittal shall consist of one set of electronic files on compact disc, read-only memory (CD-ROM), two sets of blue-line prints and one set of the approved working as-built drawings. They shall be complete in all details and identical in form and function to the contract drawing files supplied by the Government. Any transactions or adjustments necessary to accomplish this is the responsibility of the Contractor. The Government reserves the right to reject any drawing files it deems incompatible with the customer's CADD system. Paper prints, drawing files and storage media submitted will become the property of the Government upon final approval. Failure to submit final as-built drawing files and marked prints as specified shall be cause for withholding any payment due the Contractor under this contract. Approval and acceptance of final as-built drawings shall be accomplished before final payment is made to the Contractor.

1.2.1.5 Omitted

1.2.1.6 Payment

No separate payment will be made for as-built drawings required under this contract, and all costs accrued in connection with such drawings shall be considered a subsidiary obligation of the Contractor.

1.2.2 As-Built Record of Equipment and Materials

The Contractor shall furnish one copy of preliminary record of equipment and materials used on the project 15 days prior to final inspection. This preliminary submittal will be reviewed and returned 2 days after final inspection with Government comments. Two sets of final record of equipment and materials shall be submitted 10 days after final inspection. The

designations shall be keyed to the related area depicted on the contract drawings. The record shall list the following data:

RECORD OF DESIGNATED EQUIPMENT AND MATERIALS DATA

Description	Specification Section	Manufacturer and Catalog, Model, and Serial Number	Composition and Size	Where Used

1.2.3 Final Approved Shop Drawings

The Contractor shall furnish final approved project shop drawings 30 days after transfer of the completed facility.

1.2.4 Construction Contract Specifications

The Contractor shall furnish final as-built construction contract specifications, including modifications thereto, 30 days after transfer of the completed facility.

1.2.5 Real Property Equipment

The Contractor shall furnish a list of installed equipment furnished under this contract. The list shall include all information usually listed on manufacturer's name plate. The "EQUIPMENT-IN-PLACE LIST" shall include, as applicable, the following for each piece of equipment installed: description of item, location (by room number), model number, serial number, capacity, name and address of manufacturer, name and address of equipment supplier, condition, spare parts list, manufacturer's catalog, and warranty. A draft list shall be furnished at time of transfer. The final list shall be furnished 30 days after transfer of the completed facility.

1.3 WARRANTY MANAGEMENT

1.3.1 Warranty Management Plan

The Contractor shall develop a warranty management plan which shall contain information relevant to the clause Warranty of Construction in Section 00800. At least 30 days before the planned pre-warranty conference, the Contractor shall submit the warranty management plan for Government approval. The warranty management plan shall include all required actions and documents to assure that the Government receives all warranties to which it is entitled. The plan shall be in narrative form and contain sufficient detail to render it suitable for use by future maintenance and repair personnel, whether tradesmen, or of engineering background, not necessarily familiar with this contract. The term "status" as indicated below shall include due date and whether item has been submitted or was accomplished. Warranty information made available during the construction phase shall be submitted to the Contracting Officer for approval prior to each monthly pay estimate. Approved information shall be assembled in a binder and shall be turned over to the Government upon acceptance of the work. The construction warranty period shall begin on the date of project acceptance and shall continue for the full product warranty period. A joint 4 month and 9 month warranty inspection shall be conducted, measured from time of acceptance, by the Contractor, Contracting Officer and the Customer Representative.

Information contained in the warranty management plan shall include, but shall not be limited to, the following:

a. Roles and responsibilities of all personnel associated with the warranty process, including points of contact and telephone numbers within the organizations of the Contractors, subcontractors, manufacturers or suppliers involved.

b. Listing and status of delivery of all Certificates of Warranty for extended warranty items, to include roofs, HVAC balancing, pumps, motors, transformers, and for all commissioned systems such as fire protection and alarm systems, sprinkler systems, lightning protection systems, etc.

c. A list for each warranted equipment, item, feature of construction or system indicating:

(1) Name of item.
(2) Model and serial numbers.
(3) Location where installed.
(4) Name and phone numbers of manufacturers or suppliers.
(5) Names, addresses and telephone numbers of sources of spare parts.
(6) Warranties and terms of warranty. This shall include one-year overall warranty of construction. Items which have extended warranties shall be indicated with separate warranty expiration dates.
(7) Cross-reference to warranty certificates as applicable.
(8) Starting point and duration of warranty period.
(9) Summary of maintenance procedures required to continue the warranty in force.
(10) Cross-reference to specific pertinent Operation and Maintenance manuals.
(11) Organization, names and phone numbers of persons to call for warranty service.
(12) Typical response time and repair time expected for various warranted equipment.

d. The Contractor's plans for attendance at the 4 and 9 month post-construction warranty inspections conducted by the Government.

e. Procedure and status of tagging of all equipment covered by extended warranties.

f. Copies of instructions to be posted near selected pieces of equipment where operation is critical for warranty and/or safety reasons.

1.3.2 Performance Bond

The Contractor's performance bond shall remain in effect throughout the construction period.

a. In the event the Contractor fails to commence and diligently pursue any construction warranty work required, the Contracting Officer will have the work performed by others, and after completion of the work, will charge the remaining construction warranty funds of expenses incurred by the Government while performing the work, including, but not limited to administrative expenses.

b. In the event sufficient funds are not available to cover the construction warranty work performed by the Government at the Contractor's expense, the Contracting Officer will have the right to recoup expenses from the bonding company.

c. Following oral or written notification of required construction warranty repair work, the Contractor shall respond in a timely manner. Written verification will follow oral instructions. Failure of the Contractor to respond will be cause for the Contracting Officer to proceed against the Contractor.

1.3.3 Pre-Warranty Conference

Prior to contract completion, at approximately 90% complete or 50 days prior to completion, or at a time designated by the Contracting Officer, the Contractor shall meet with the Contracting Officer to develop a mutual understanding with respect to the requirements of this section. Communication procedures for Contractor notification of construction warranty defects, priorities with respect to the type of defect, reasonable time required for Contractor response, and other details deemed necessary by the Contracting Officer for the execution of the construction warranty shall be established/reviewed at this meeting. In connection with these requirements and at the time of the Contractor's quality control completion inspection, the Contractor shall furnish the name, telephone number and address of a licensed and bonded company which is authorized to initiate and pursue construction warranty work action on behalf of the Contractor. This point of contact will be located within the local service area of the warranted construction, shall be continuously available, and shall be responsive to Government inquiry on warranty work action and status. This requirement does not relieve the Contractor of any of its responsibilities in connection with other portions of this provision.

1.3.4 Contractor's Response to Construction Warranty Service Requirements

Following oral or written notification by the Contracting Officer, the Contractor shall respond to construction warranty service requirements in accordance with the "Construction Warranty Service Priority List" and the three categories of priorities listed below. The Contractor shall submit a report on any warranty item that has been repaired during the warranty period. The report shall include the cause of the problem, date reported, corrective action taken, and when the repair was completed. If the Contractor does not perform the construction warranty within the timeframes specified, the Government will perform the work and backcharge the construction warranty payment item established.

a. First Priority Code 1. Perform onsite inspection to evaluate situation, and determine course of action within 4 hours, initiate work within 6 hours and work continuously to completion or relief.

b. Second Priority Code 2. Perform onsite inspection to evaluate situation, and determine course of action within 8 hours, initiate work within 24 hours and work continuously to completion or relief.

c. Third Priority Code 3. All other work to be initiated within 3 work days and work continuously to completion or relief.

d. The "Construction Warranty Service Priority List" is as follows:

Code 1-Air Conditioning Systems
(1) Recreational support.
(2) Air conditioning leak in part of building, if causing damage.
(3) Air conditioning system not cooling properly.

Code 1-Doors
(1) Overhead doors not operational, causing a security, fire, or safety problem.
(2) Interior, exterior personnel doors or hardware, not functioning properly, causing a security, fire, or safety problem.

Code 3-Doors
(1) Overhead doors not operational.
(2) Interior/exterior personnel doors or hardware not functioning properly.

Code 1-Electrical
(1) Power failure (entire area or any building operational after 1600 hours).
(2) Security lights.
(3) Smoke detectors.

Code 2-Electrical
(1) Power failure (no power to a room or part of building).
(2) Receptacle and lights (in a room or part of building).

Code 3-Electrical
Street lights.

Code 1-Gas
(1) Leaks and breaks.
(2) No gas to family housing unit or cantonment area.

Code 1-Heat
(1). Area power failure affecting heat.
(2). Heater in unit not working.

Code 2-Kitchen Equipment
(1) Dishwasher not operating properly.
(2) All other equipment hampering preparation of a meal.

Code 1-Plumbing
(1) Hot water heater failure.
(2) Leaking water supply pipes.

Code 2-Plumbing
(1) Flush valves not operating properly.
(2) Fixture drain, supply line to commode, or any water pipe leaking.
(3) Commode leaking at base.

Code 3-Plumbing
Leaky faucets.

Code 3-Interior

(1) Floors damaged.
(2) Paint chipping or peeling.
(3) Casework.

Code 1-Roof Leaks
Temporary repairs will be made where major damage to property is occurring.

Code 2-Roof Leaks
Where major damage to property is not occurring, check for location of leak during rain and complete repairs on a Code 2 basis.

Code 2-Water (Exterior)
No water to facility.

Code 2-Water (Hot)
No hot water in portion of building listed.

Code 3-All other work not listed above.

1.3.5 Warranty Tags

At the time of installation, each warranted item shall be tagged with a durable, oil and water resistant tag approved by the Contracting Officer. Each tag shall be attached with a copper wire and shall be sprayed with a silicone waterproof coating. The date of acceptance and the QC signature shall remain blank until project is accepted for beneficial occupancy. The tag shall show the following information.

a. Type of product/material_____.

b. Model number_____.

c. Serial number_____.

d. Contract number_____.

e. Warranty period_____from_____to_____.

f. Inspector's signature_____.

g. Construction Contractor_____.

Address_____.

Telephone number_____.

h. Warranty contact_____.

Address_____.

Telephone number_____.

i. Warranty response time priority code_____.

j. WARNING - PROJECT PERSONNEL TO PERFORM ONLY OPERATIONAL MAINTENANCE DURING THE WARRANTY PERIOD.

1.4 MECHANICAL TESTING, ADJUSTING, BALANCING, AND COMMISSIONING

Prior to final inspection and transfer of the completed facility, all reports, statements, certificates, and completed checklists for testing, adjusting, balancing, and commissioning of mechanical systems shall be submitted to and approved by the Contracting Officer as specified in applicable technical specification sections.

1.5 OPERATION AND MAINTENANCE MANUALS

Operation manuals and maintenance manuals shall be submitted as specified. Operation manuals and maintenance manuals provided in a common volume shall be clearly differentiated and shall be separately indexed.

1.6 FINAL CLEANING

The premises shall be left broom clean. Stains, foreign substances, and temporary labels shall be removed from surfaces. Carpet and soft surfaces shall be vacuumed. Equipment and fixtures shall be cleaned to a sanitary condition. Filters of operating equipment shall be replaced. Debris shall be removed from roofs, drainage systems, gutters, downspouts and boot wash areas. Paved areas shall be swept and landscaped areas shall be raked clean. The site shall have waste, surplus materials, and rubbish removed. The project area shall have temporary structures, barricades, project signs, fences and construction facilities removed. A list of completed clean-up items shall be submitted on the day of final inspection.

PART 2 PRODUCTS (NOT USED)

PART 3 EXECUTION (NOT USED)

-- End of Section --

SECTION 01781

OPERATION AND MAINTENANCE DATA
12/01

PART 1 GENERAL

1.1 SUBMISSION OF OPERATION AND MAINTENANCE DATA

Submit Operation and Maintenance (O&M) Data specifically applicable to this contract and a complete and concise depiction of the provided equipment, product, or system. Organize and present information in sufficient detail to clearly explain O&M requirements at the system, equipment, component, and subassembly level. Include an index preceding each submittal. Submit in accordance with this section and Section 01330, "Submittal Procedures."

The contractor will use this data submitted as a basis for conducting training classes for government personnel on equipment and systems. The Contractor will conduct and video record the classes.

1.1.2 Package Quality

Documents must be fully legible. Poor quality copies and material with hole punches obliterating the text or drawings will not be accepted.

1.1.3 Package Content

Data package content shall be as shown in the paragraph titled "Schedule of Operation and Maintenance Data Packages." Comply with the data package requirements specified in the individual technical sections, including the content of the packages and addressing each product, component, and system designated for data package submission.

1.1.5 Changes to Submittals

Manufacturer-originated changes or revisions to submitted data shall be furnished by the Contractor if a component of an item is so affected subsequent to acceptance of the O&M Data. Changes, additions, or revisions required by the Contracting Officer for final acceptance of submitted data, shall be submitted by the Contractor within 30 calendar days of the notification of this change requirement.

1.2 TYPES OF INFORMATION REQUIRED IN O&M DATA PACKAGES

1.2.1 Operating Instructions

Include specific instructions, procedures, and illustrations for the following phases of operation:

1.2.1.1 Safety Precautions

List personnel hazards and equipment or product safety precautions for all operating conditions.

1.2.1.2 Operator Prestart

Include procedures required to set up and prepare each system for use.

1.2.1.3 Startup, Shutdown, and Post-Sshutdown Procedures

Provide narrative description for Startup, Shutdown and Post-shutdown operating procedures including the control sequence for each procedure.

1.2.1.4 Normal Operations

Provide narrative description of Normal Operating Procedures. Include Control Diagrams with data to explain operation and control of systems and specific equipment.

1.2.1.5 Emergency Operations

Include Emergency Procedures for equipment malfunctions to permit a short period of continued operation or to shut down the equipment to prevent further damage to systems and equipment. Include Emergency Shutdown Instructions for fire, explosion, spills, or other foreseeable contingencies. Provide guidance and procedures for emergency operation of all utility systems including required valve positions, valve locations and zones orportions of systems controlled.

1.2.1.6 Operator Service Requirements

Include instructions for services to be performed by the operator such as lubrication, adjustment, inspection, and recording gage readings.

1.2.1.7 Environmental Conditions

Include a list of Environmental Conditions (temperature, humidity, and other relevant data) that are best suited for the operation of each product, component or system. Describe conditions under which the itemequipment should not be allowed to run.

1.2.2 Preventive Maintenance

Include the following information for preventive and scheduled maintenance to minimize corrective maintenance and repair.

1.2.2.1 Lubrication Data

Include preventative maintenance lubrication data, in addition to instructions for lubrication provided under paragraph titled "Operator Service Requirements":

a. A table showing recommended lubricants for specific temperature ranges and applications.

b. Charts with a schematic diagram of the equipment showing lubrication points, recommended types and grades of lubricants, and capacities.

c. A Lubrication Schedule showing service interval frequency.

1.2.2.2 Preventive Maintenance Plan and Schedule

Include manufacturer's schedule for routine preventive maintenance, inspections, tests and adjustments required to ensure proper and economical operation and to minimize corrective maintenance. Provide manufacturer's projection of preventive maintenance work-hours on a daily, weekly, monthly, and annual basis including craft requirements by type of craft. For periodic calibrations, provide manufacturer's specified frequency and procedures for each separate operation.

1.2.3 Corrective Maintenance (Repair)

Include manufacturer's recommended procedures and instructions for correcting problems and making repairs.

1.2.3.1 Troubleshooting Guides and Diagnostic Techniques

Include step-by-step procedures to promptly isolate the cause of typical malfunctions. Describe clearly why the checkout is performed and what conditions are to be sought. Identify tests or inspections and test equipment required to determine whether parts and equipment may be reused or require replacement.

1.2.3.2 Wiring Diagrams and Control Diagrams

Wiring diagrams and control diagrams shall be point-to-point drawings of wiring and control circuits including factory-field interfaces. Provide a complete and accurate depiction of the actual job specific wiring and control work. On diagrams, number electrical and electronic wiring and pneumatic control tubing and the terminals for each type, identically to actual installation configuration and numbering.

1.2.3.3 Maintenance and Repair Procedures

Include instructions and alist of tools required to repair or restore the product or equipment to proper condition or operating standards.

1.2.3.4 Removal and Replacement Instructions

Include step-by-step procedures and a list required tools and supplies for removal, replacement, disassembly, and assembly of components, assemblies, subassemblies, accessories, and attachments. Provide tolerances, dimensions, settings and adjustments required. Instructions shall include a combination of text and illustrations.

1.2.3.5 Spare Parts and Supply Lists

Include lists of spare parts and supplies required for maintenance and repair to ensure continued service or operation without unreasonable delays. Special consideration is required for facilities at remote locations. List spare parts and supplies that have a long lead-time to obtain.

1.2.3.6 Corrective Maintenance Work-Hours

Include manufacturer's projection of corrective maintenance work-hours including requirements by type of craft. Corrective maintenance that requires completion orparticipation of the equipment manufacturer shall be identified and tabulated separately.

1.2.4 Appendices

Provide information required below and information not specified in the preceding paragraphs but pertinent to the maintenance or operation of the product or equipment. Include the following:

1.2.4.1 Parts Identification

Provide identification and coverage for all parts of each component, assembly, subassembly, and accessory of the end items subject to replacement. Include special hardware requirements, such as requirement to use high-strength bolts and nuts. Identify parts by make, model, serial number, and source of supply to allow reordering without further identification. Provide clear and legible illustrations, drawings, and exploded views to enable easy identification of the items. When illustrations omit the part numbers and description, both the illustrations and separate listing shall show the index, reference, or key number that will cross-reference the illustrated part to the listed part. Parts shown in the listings shall be grouped by components, assemblies, and subassemblies in accordance with the manufacturer's standard practice. Parts data may cover more than one model or series of equipment, components, assemblies, subassemblies, attachments, or accessories, such as typically shown in a master parts catalog

1.2.4.2 Warranty Information

List and explain the various warranties and include the servicing and technical precautions prescribed by the manufacturers or contract documents in order to keep warranties in force. Include warranty information for primary components such as the compressor of air conditioning system.

1.2.4.3 Personnel Training Requirements

Provide information available from the manufacturers that is needed for use in training designated personnel to properly operate and maintain the equipment and systems.

1.2.4.4 Testing Equipment and Special Tool Information

Include information on test equipment required to perform specified tests and on special tools needed for the operation, maintenance, and repair of components.

1.2.4.5 Contractor Information

Provide a list that includes the name, address, and telephone number of the General Contractor and each Subcontractor who installed the product or equipment, or system. For each item, also provide the name address and telephone number of the manufacturer's representative and service organization most convenient to the project site. Provide the name, address, and telephone number of the product, equipment, and system manufacturers.

1.3 SCHEDULE OF OPERATION AND MAINTENANCE DATA PACKAGES

Furnish the O&M data packages specified in individual technical sections. The required information for each O&M data package is as follows:

1.3.1 Data Package 1

a. Safety precautions

b. Maintenance and repair procedures

c. Warranty information

d. Contractor information

e. Spare parts and supply list

1.3.2 Data Package 2

a. Safety precautions

b. Normal operations

c. Environmental conditions

d. Lubrication data

e. Preventive maintenance plan and schedule

f. Maintenance and repair procedures

g. Removal and replacement instructions

h. Spare parts and supply list

i. Parts identification

j. Warranty information

k. Contractor information

1.3.3 Data Package 3

a. Safety precautions

b. Normal operations

c. Emergency operations

d. Environmental conditions

e. Lubrication data

f. Preventive maintenance plan and schedule

g. Troubleshooting guides and diagnostic techniques

h. Wiring diagrams and control diagrams

i. Maintenance and repair procedures

j. Removal and replacement instructions

k. Spare parts and supply list

l. Parts identification

m. Warranty information

n. Testing equipment and special tool information

o. Contractor information

1.3.4 Data Package 4

a. Safety precautions

b. Operator prestart

c. Startup, shutdown, and post-shutdown procedures

d. Normal operations

e. Emergency operations

f. Operator service requirements

g. Environmental conditions

h. Lubrication data

i. Preventive maintenance plan and schedule

j. Troubleshooting guides and diagnostic techniques

k. Wiring diagrams and control diagrams

l. Maintenance and repair procedures

m. Removal and replacement instructions

n. Spare parts and supply list

o. Corrective maintenance man-hours

p. Parts identification

q. Warranty information

r. Personnel training requirements

s. Testing equipment and special tool information

t. Contractor information

1.3.5 Data Package 5

a. Safety precautions

b. Operator prestart

c. Start-up, shutdown, and post-shutdown procedures

d. Normal operations

e. Environmental conditions

f. Preventive maintenance plan and schedule

g. Troubleshooting guides and diagnostic techniques

h. Wiring and control diagrams

i. Maintenance and repair procedures

j. Spare parts and supply list

k. Testing equipments and special tools

l. Warranty information

m. Contractor information

PART 2 PRODUCTS

Not used

PART 3 EXECUTION

Not used

-- End of Section --