US Army Corps
of Engineers
Savannah District

Pope AFB
North Carolina

Solicitation Number
DACA21-03-R-0021
POL Storage Complex
FY-03, Line Item 46971
Volume I of III – Sections 00010 through 00800 and
Technical Provisions – Divisions 1 and 2
April 2003

THIS SOLICITATION IS UNRESTRICTED PURSUANT TO THE
"BUSINESS OPPORTUNITY DEVELOPMENT REFORM ACT OF 1988"
(PUBLIC LAW 100-656)

U.S. ARMY ENGINEER DISTRICT, SAVANNAH
CORPS OF ENGINEERS
100 WEST OGLETHORPE AVENUE
SAVANNAH, GEORGIA 31401-3640

TABLE OF CONTENTS

00010 Solicitation/Contract Form and Bidding Schedule

00100 Instructions, Conditions, and Notices to Offerors

00600 Representations and Certifications

00700 Contract Clauses

00800 Special Contract Requirements

Attachment 1 to Section 00800

Specifications - Divisions 1 through 16

SOLICITATION, OFFER, AND AWARD *(Construction, Alteration, or Repair)*	1. SOLICITATION NO. DACA21-03-R-0021	2. TYPE OF SOLICITATION [ ] SEALED BID (IFB) [X] NEGOTIATED *(RFP)*	3. DATE ISSUED 10-Apr-2003	PAGE OF PAGES 1 OF 169

IMPORTANT - The "offer" section on the reverse must be fully completed by offeror.

4. CONTRACT NO.	5. REQUISITION/PURCHASE REQUEST NO.	6. PROJECT NO.

7. ISSUED BY CODE DACA21	8. ADDRESS OFFER TO *(If Other Than Item 7)* CODE
A-E & CONSTRUCTION BRANCH 100 W. OGLETHORPE AVE SAVANNAH GA 31401-3640	**See Item 7**
TEL:(912)652-5075 FAX: (912)652-5828	TEL: FAX:

9. FOR INFORMATION CALL:	A. NAME	B. TELEPHONE NO. *(Include area code)* *(NO COLLECT CALLS)*
	DONNA S KNIGHT	(912)652-5504

SOLICITATION

NOTE: In sealed bid solicitations "offer" and "offeror" mean "bid" and "bidder".

10. THE GOVERNMENT REQUIRES PERFORMANCE OF THE WORK DESCRIBED IN THESE DOCUMENTS *(Title, identifying no., date):*

Contract Specialist: Donna Knight, Phone (912) 652-5504
E-Mail: donna.s.knight@sas02.usace.army.mil

Contracting Officer: Colleen O'keefe, Phone (912) 652-5075
E-Mail: colleen.j.okeefe@sas02.usace.army.mil

POL STORAGE COMPLEX
POPE AIR FORCE BASE, NORTH CAROLINA
FY 03, LINE ITEM 46971and 3113000

11. The Contractor shall begin performance within 10 calendar days and complete it within 720 calendar days after receiving [ ] award, [X] notice to proceed. This performance period is [ ] mandatory, [ ] negotiable. *(See* FAR 52.211-10 *.)*

12 A. THE CONTRACTOR MUST FURNISH ANY REQUIRED PERFORMANCE AND PAYMENT BONDS? *(If "YES," indicate within how many calendar days after award in Item 12B.)* [X] YES [ ] NO	12B. CALENDAR DAYS 10

13. ADDITIONAL SOLICITATION REQUIREMENTS:

A. Sealed offers in original and 5 copies to perform the work required are due at the place specified in Item 8 by 02:00 PM *(hour)* local time 14 May 2003 *(date).* If this is a sealed bid solicitation, offers must be publicly opened at that time. Sealed envelopes containing offers shall be marked to show the offeror's name and address, the solicitation number, and the date and time offers are due.

B. An offer guarantee [X] is, [ ] is not required.

C. All offers are subject to the (1) work requirements, and (2) other provisions and clauses incorporated in the solicitation in full text or by reference.

D. Offers providing less than 90 calendar days for Government acceptance after the date offers are due will not be considered and will be rejected.

SOLICITATION, OFFER, AND AWARD (Continued)

(Construction, Alteration, or Repair)

OFFER ***(Must be fully completed by offeror)***

14. NAME AND ADDRESS OF OFFEROR *(Include ZIP Code)*	15. TELEPHONE NO. *(Include area code)*
	16. REMITTANCE ADDRESS *(Include only if different than Item 14)* **See Item 14**
CODE / FACILITY CODE	

17. The offeror agrees to perform the work required at the prices specified below in strict accordance with the terms of this solicitation, if this offer is accepted by the Government in writing within _____ calendar days after the date offers are due. *(Insert any number equal to or greater than the minimum requirements stated in Item 13D. Failure to insert any number means the offeror accepts the minimum in Item 13D.)*

AMOUNTS	SEE SCHEDULE OF PRICES

18. The offeror agrees to furnish any required performance and payment bonds.

19. ACKNOWLEDGMENT OF AMENDMENTS

(The offeror acknowledges receipt of amendments to the solicitation -- give number and date of each)

AMENDMENT NO.										
DATE										

20A. NAME AND TITLE OF PERSON AUTHORIZED TO SIGN OFFER *(Type or print)*	20B. SIGNATURE	20C. OFFER DATE

AWARD ***(To be completed by Government)***

21. ITEMS ACCEPTED:

22. AMOUNT	23. ACCOUNTING AND APPROPRIATION DATA

24. SUBMIT INVOICES TO ADDRESS SHOWN IN *(4 copies unless otherwise specified)*	**ITEM**	25. OTHER THAN FULL AND OPEN COMPETITION PURSUANT TO ☐ 10 U.S.C. 2304(c) ☐ 41 U.S.C. 253(c)
26. ADMINISTERED BY CODE		27. PAYMENT WILL BE MADE BY: CODE

CONTRACTING OFFICER WILL COMPLETE ITEM 28 OR 29 AS APPLICABLE

☐ 28. NEGOTIATED AGREEMENT *(Contractor is required to sign this document and return _____ copies to issuing office.)* Contractor agrees to furnish and deliver all items or perform all work, requisitions identified on this form and any continuation sheets for the consideration stated in this contract. The rights and obligations of the parties to this contract shall be governed by (a) this contract award, (b) the solicitation, and (c) the clauses, representations, certifications, and specifications or incorporated by reference in or attached to this contract.

☐ 29. AWARD *(Contractor is not required to sign this document.)* Your offer on this solicitation, is hereby accepted as to the items listed. This award consummates the contract, which consists of (a) the Government solicitation and your offer, and (b) this contract award. No further contractual document is necessary.

30A. NAME AND TITLE OF CONTRACTOR OR PERSON AUTHORIZED TO SIGN *(Type or print)*		31A. NAME OF CONTRACTING OFFICER *(Type or print)* TEL: EMAIL:	
30B. SIGNATURE	30C. DATE	31B. UNITED STATES OF AMERICA BY	31C. AWARD DATE

SUPPLIES OR SERVICES AND PRICES/COSTS SCHEDULE FOR POL STORAGE COMPLEX POPE AIR FORCE BASE, NORTH CAROLINA FY03 Line Item 46971

TOTAL BASE BID PLUS OPTIONS NO. 1 and 2
(Items 0001 thru 0008)----------$_____

ITEM NO	SUPPLIES/SERVICES	QUANTITY	UNIT	UNIT PRICE	AMOUNT
0001	Administrative/Operations Building Complete to 5-foot Line	1	Lump Sum	XXXXXXXX	$_____

ITEM NO	SUPPLIES/SERVICES	QUANTITY	UNIT	UNIT PRICE	AMOUNT
0002	Filter Station Complete to 5-foot Line	1	Lump Sum	XXXXXXX	$_____

ITEM NO	SUPPLIES/SERVICES	QUANTITY	UNIT	UNIT PRICE	AMOUNT
0003	Cut and Cover Fuel Tanks and Pumphouses Complete to 5-foot Line	1	Lump Sum	XXXXXXX	$_____

ITEM NO	SUPPLIES/SERVICES	QUANTITY	UNIT	UNIT PRICE	AMOUNT
0004	Off-Load/Fill Stand/Hydrant Hose Test Stand, Complete to 5-foot Line	1	Lump Sum	XXXXXXX	$_____

ITEM NO	SUPPLIES/SERVICES	QUANTITY	UNIT	UNIT PRICE	AMOUNT
0005	Checkpoint/with Canopy Complete to 5-foot LIne	1	Lump Sum	XXXXXXX	$_____

ITEM NO	SUPPLIES/SERVICES	QUANTITY	UNIT	UNIT PRICE	AMOUNT
0006	Support Facilities Preparation, Development, and Demolition, Including Utilities, Complete Exclusive of all Other Work Listed Separately	1	Lump Sum	XXXXXXX	$_____

ITEM NO	SUPPLIES/SERVICES	QUANTITY	UNIT	UNIT PRICE	AMOUNT
0007		500	Cubic Yard	$_____	$_____

Option 1
Removal of Fuel Contaminates Soil Up to 500 Cubic Yards

ITEM NO	SUPPLIES/SERVICES	QUANTITY	UNIT	UNIT PRICE	AMOUNT
0008		1,368	Cubic Yard	$_____	$_____

Option 2
Removal of Fuel Contaminated Soil
Over 500 Cubic Yards and Up to 1368 Cubic Yards

NOTICE TO OFFERORS

1. **HAND-CARRIED OR MAILED PROPOSALS**:

All proposals must be clearly identified with the contractor's name and address. To ensure timely and proper handling, the lower left corner of the outermost wrapper should indicate the Request For Proposal No., Due Date of Proposal, Time by which Proposals are Due, and Title of Project.

The Government will not be responsible for proposals delivered to any location or to anyone other than those designated to receive proposals on its behalf as indicated below.

Proposals delivered by commercial carrier and those sent by U.S. Mail, including U.S. Express Mail, must be addressed as indicated below. Proposals shall not be addressed to any specific person.

U.S. Army Engineer District, Savannah
ATTN: CESAS-CT-C
100 West Oglethorpe Avenue
Savannah, Georgia 31401-3640

Proposals sent by U.S. Mail or delivered by commercial carrier must be received by mailroom personnel on the first floor of 100 West Oglethorpe Avenue by the time specified in Block 13 of the SF1442 for receipt of proposals.

Offerors are cautioned that proposals sent via United States Postal Service Express Mail are first delivered to the Savannah District Post Office Box instead of 100 West Oglethorpe Avenue, "the office designated for receipt of proposals" therefore, allow sufficient mailing time.

Hand-carried proposals also must be delivered to mailroom personnel on the first floor of 100 West Oglethorpe Avenue by the time specified in Block 13 of SF1442 for receipt of proposals.

Offerors are cautioned that there is no parking in or around the building, therefore, when hand delivering proposals sufficient time should be allowed for transporting of proposal packages from your vehicle to mailroom personnel.

2. **SECURITY ISSUES:** No commercial vehicles larger than a pickup will be allowed to directly enter Pope Air Force Base, North Carolina. All commercial vehicles larger than a pickup must enter Pope Air Force Base through Fort Bragg, North Carolina through one of two locations (Knox Street or Longstreet Road) where the vehicle will be "scanned."

3. **FACSIMILE MODIFICATIONS OF PROPOSALS ARE NOT AUTHORIZED.**

4. **QUALITY CONTROL SYSTEM (QCS):** Any contract award resulting from this solicitation will require the mandatory use of the automated Quality Control System. Please see Section 01312A for additional information.

CLAUSES INCORPORATED BY FULL TEXT

52.204-6 DATA UNIVERSAL NUMBERING SYSTEM (DUNS) NUMBER (JUN 99)

(a) The offeror shall enter, in the block with its name and address on the cover page of its offer, the annotation "DUNS" followed by the DUNS number that identifies the offeror's name and address exactly as stated in the offer.

(b) If the offeror does not have a DUNS number, it should contact Dun and Bradstreet directly to obtain one. A DUNS number will be provided immediately by telephone at no charge to the offeror. For information on obtaining a DUNS number, the offeror, if located within the United States, should call Dun and Bradstreet at 1-800-333-0505. The offeror should be prepared to provide the following information:

(1) Company name.

(2) Company address.

(3) Company telephone number.

(4) Line of business.

(5) Chief executive officer/key manager.

(6) Date the company was started.

(7) Number of people employed by the company.

(8) Company affiliation.

(c) Offerors located outside the United States may obtain the location and phone number of the local Dun and Bradstreet Information Services office from the Internet Home Page at http://www.customerservice@dnb.com. If an offeror is unable to locate a local service center, it may send an e-mail to Dun and Bradstreet at globalinfo@mail.dnb.com.

(End of provision)

52.211-2 AVAILABILITY OF SPECIFICATIONS LISTED IN THE DOD INDEX OF SPECIFICATIONS AND STANDARDS (DODISS) AND DESCRIPTIONS LISTED IN THE ACQUISITION MANAGEMENT SYSTEMS AND DATA REQUIREMENTS CONTROL LIST, DOD 5010.12-L (DEC 1999)

Copies of specifications, standards, and data item descriptions cited in this solicitation may be obtained--

(a) From the ASSIST database via the Internet at http://assist.daps.mil; or

(b) By submitting a request to the--Department of Defense Single Stock Point (DoDSSP), Building 4, Section D, 700 Robbins Avenue, Philadelphia, PA 19111-5094, Telephone (215) 697-2667/2179, Facsimile (215) 697-1462.

(End of provision)

52.211-14 NOTICE OF PRIORITY RATING FOR NATIONAL DEFENSE USE (SEP 1990)

Any contract awarded as a result of this solicitation will be DO rated order certified for national defense use under the Defense Priorities and Allocations System (DPAS) (15 CFR 700), and the Contractor will be required to follow all of the requirements of this regulation.
(End of provision)

52.214-5000 APPARENT CLERICAL MISTAKES (MAR 1995)--EFARS

(a) For the purpose of initial evaluations of bids, the following will be utilized in the resolving arithmetic discrepancies found on the face of bidding schedule as submitted by the bidder:

(1) Obviously misplaced decimal points will be corrected;
(2) Discrepancy between unit price and extended price, the unit price will govern;
(3) Apparent errors in extension of unit prices will be corrected;
(4) Apparent errors in addition of lump-sum and extended prices will be corrected.

(b) For the purpose of bid evaluation, the government will proceed on the assumption that the bidder intends his bid to be evaluated on basis of the unit prices, the totals arrived at by resolution of arithmetic discrepancies as provided above and the bid will be so reflected on the abstract of bids.

(c) These correction procedures shall not be used to resolve any ambiguity concerning which bid is low.
(End of statement)

52.215-1 INSTRUCTIONS TO OFFERORS--COMPETITIVE ACQUISITION (MAY 2001)

(a) Definitions. As used in this provision--

“Discussions” are negotiations that occur after establishment of the competitive range that may, at the Contracting Officer's discretion, result in the offeror being allowed to revise its proposal.

“In writing or written” means any worded or numbered expression which can be read, reproduced, and later communicated, and includes electronically transmitted and stored information.

“Proposal modification” is a change made to a proposal before the solicitation's closing date and time, or made in response to an amendment, or made to correct a mistake at any time before award.

“Proposal revision” is a change to a proposal made after the solicitation closing date, at the request of or as allowed by a Contracting Officer as the result of negotiations.

“Time”, if stated as a number of days, is calculated using calendar days, unless otherwise specified, and will include Saturdays, Sundays, and legal holidays. However, if the last day falls on a Saturday, Sunday, or legal holiday, then the period shall include the next working day.

(b) Amendments to solicitations. If this solicitation is amended, all terms and conditions that are not amended remain unchanged. Offerors shall acknowledge receipt of any amendment to this solicitation by the date and time specified in the amendment(s).

(c) Submission, modification, revision, and withdrawal of proposals. (1) Unless other methods (e.g., electronic commerce or facsimile) are permitted in the solicitation, proposals and modifications to proposals shall be submitted in paper media in sealed envelopes or packages (i) addressed to the office specified in the solicitation, and (ii) showing the time and date specified for receipt, the solicitation number, and the name and address of the offeror.

Offerors using commercial carriers should ensure that the proposal is marked on the outermost wrapper with the information in paragraphs (c)(1)(i) and (c)(1)(ii) of this provision.

(2) The first page of the proposal must show--

(i) The solicitation number;

(ii) The name, address, and telephone and facsimile numbers of the offeror (and electronic address if available);

(iii) A statement specifying the extent of agreement with all terms, conditions, and provisions included in the solicitation and agreement to furnish any or all items upon which prices are offered at the price set opposite each item;

(iv) Names, titles, and telephone and facsimile numbers (and electronic addresses if available) of persons authorized to negotiate on the offeror's behalf with the Government in connection with this solicitation; and

(v) Name, title, and signature of person authorized to sign the proposal. Proposals signed by an agent shall be accompanied by evidence of that agent's authority, unless that evidence has been previously furnished to the issuing office.

(3) Submission, modification, or revision, of proposals.

(i) Offerors are responsible for submitting proposals, and any modifications, or revisions, so as to reach the Government office designated in the solicitation by the time specified in the solicitation. If no time is specified in the solicitation, the time for receipt is 4:30 p.m., local time, for the designated Government office on the date that proposal or revision is due.

(ii)(A) Any proposal, modification, or revision received at the Government office designated in the solicitation after the exact time specified for receipt of offers is “late” and will not be considered unless it is received before award is made, the Contracting Officer determines that accepting the late offer would not unduly delay the acquisition; and--

(1) If it was transmitted through an electronic commerce method authorized by the solicitation, it was received at the initial point of entry to the Government infrastructure not later than 5:00 p.m. one working day prior to the date specified for receipt of proposals; or

(2) There is acceptable evidence to establish that it was received at the Government installation designated for receipt of offers and was under the Government's control prior to the time set for receipt of offers; or

(3) It is the only proposal received.

(B) However, a late modification of an otherwise successful proposal that makes its terms more favorable to the Government, will be considered at any time it is received and may be accepted.

(iii) Acceptable evidence to establish the time of receipt at the Government installation includes the time/date stamp of that installation on the proposal wrapper, other documentary evidence of receipt maintained by the installation, or oral testimony or statements of Government personnel.

(iv) If an emergency or unanticipated event interrupts normal Government processes so that proposals cannot be received at the office designated for receipt of proposals by the exact time specified in the solicitation, and urgent Government requirements preclude amendment of the solicitation, the time specified for receipt of proposals will be deemed to be extended to the same time of day specified in the solicitation on the first work day on which normal Government processes resume.

(v) Proposals may be withdrawn by written notice received at any time before award. Oral proposals in response to oral solicitations may be withdrawn orally. If the solicitation authorizes facsimile proposals, proposals may be withdrawn via facsimile received at any time before award, subject to the conditions specified in the provision at 52.215-5, Facsimile Proposals. Proposals may be withdrawn in person by an offeror or an authorized representative, if the identity of the person requesting withdrawal is established and the person signs a receipt for the proposal before award.

(4) Unless otherwise specified in the solicitation, the offeror may propose to provide any item or combination of items.

(5) Offerors shall submit proposals in response to this solicitation in English, unless otherwise permitted by the solicitation, and in U.S. dollars, unless the provision at FAR 52.225-17, Evaluation of Foreign Currency Offers, is included in the solicitation.

(6) Offerors may submit modifications to their proposals at any time before the solicitation closing date and time, and may submit modifications in response to an amendment, or to correct a mistake at any time before award.

(7) Offerors may submit revised proposals only if requested or allowed by the Contracting Officer.

(8) Proposals may be withdrawn at any time before award. Withdrawals are effective upon receipt of notice by the Contracting Officer.

(d) Offer expiration date. Proposals in response to this solicitation will be valid for the number of days specified on the solicitation cover sheet (unless a different period is proposed by the offeror).

(e) Restriction on disclosure and use of data. Offerors that include in their proposals data that they do not want disclosed to the public for any purpose, or used by the Government except for evaluation purposes, shall--

(1) Mark the title page with the following legend: This proposal includes data that shall not be disclosed outside the Government and shall not be duplicated, used, or disclosed--in whole or in part--for any purpose other than to evaluate this proposal. If, however, a contract is awarded to this offeror as a result of--or in connection with-- the submission of this data, the Government shall have the right to duplicate, use, or disclose the data to the extent provided in the resulting contract. This restriction does not limit the Government's right to use information contained in this data if it is obtained from another source without restriction. The data subject to this restriction are contained in sheets [insert numbers or other identification of sheets]; and

(2) Mark each sheet of data it wishes to restrict with the following legend: Use or disclosure of data contained on this sheet is subject to the restriction on the title page of this proposal.

(f) Contract award. (1) The Government intends to award a contract or contracts resulting from this solicitation to the responsible offeror(s) whose proposal(s) represents the best value after evaluation in accordance with the factors and subfactors in the solicitation.

(2) The Government may reject any or all proposals if such action is in the Government's interest.

(3) The Government may waive informalities and minor irregularities in proposals received.

(4) The Government intends to evaluate proposals and award a contract without discussions with offerors (except clarifications as described in FAR 15.306(a)). Therefore, the offeror's initial proposal should contain the offeror's best terms from a cost or price and technical standpoint. The Government reserves the right to conduct discussions if the Contracting Officer later determines them to be necessary. If the Contracting Officer determines that the number of proposals that would otherwise be in the competitive range exceeds the number at which an efficient competition can be conducted, the Contracting Officer may limit the number of proposals in the competitive range to the greatest number that will permit an efficient competition among the most highly rated proposals.

(5) The Government reserves the right to make an award on any item for a quantity less than the quantity offered, at the unit cost or prices offered, unless the offeror specifies otherwise in the proposal.

(6) The Government reserves the right to make multiple awards if, after considering the additional administrative costs, it is in the Government's best interest to do so.

(7) Exchanges with offerors after receipt of a proposal do not constitute a rejection or counteroffer by the Government.

(8) The Government may determine that a proposal is unacceptable if the prices proposed are materially unbalanced between line items or subline items. Unbalanced pricing exists when, despite an acceptable total evaluated price, the price of one or more contract line items is significantly overstated or understated as indicated by the application of cost or price analysis techniques. A proposal may be rejected if the Contracting Officer determines that the lack of balance poses an unacceptable risk to the Government.

(9) If a cost realism analysis is performed, cost realism may be considered by the source selection authority in evaluating performance or schedule risk.

(10) A written award or acceptance of proposal mailed or otherwise furnished to the successful offeror within the time specified in the proposal shall result in a binding contract without further action by either party.

(11) The Government may disclose the following information in postaward debriefings to other offerors:

(i) The overall evaluated cost or price and technical rating of the successful offeror;

(ii) The overall ranking of all offerors, when any ranking was developed by the agency during source selection;

(iii) A summary of the rationale for award; and

(iv) For acquisitions of commercial items, the make and model of the item to be delivered by the successful offeror.

(End of provision)

52.216-1 TYPE OF CONTRACT (APR 1984)

The Government contemplates award of a firm-fixed price contract resulting from this solicitation.

(End of clause)

52.217-5 EVALUATION OF OPTIONS (JUL 1990)

(a) Except when it is determined in accordance with FAR 17.206(b) not to be in the Government's best interests, the Government will evaluate offers for award purposes by adding the total price for all options to the total price for the basic requirement. Evaluation of options will not obligate the Government to exercise the option(s).

(b) The Government may reject an offer as nonresponsive if it is materially unbalanced as to prices for the basic requirement and the option quantities. An offer is unbalanced when it is based on prices significantly less than cost for some work and prices which are significantly overstated for other work.

(End of provision)

52.219-4001 SUBCONTRACTING PLAN FOR SMALL BUSINESS CONCERNS
(SEP 2002 CESAS-CT)

(a) In accordance with FAR Clause 52.219-9, large businesses must submit a subcontracting plan. A sample subcontracting plan is located in Section 00800.

(b) The subcontracting targets (expressed in terms of percentages of total planned subcontracting dollars) of the Savannah District are as follows:

Small Business	-	57.2%
Small Disadvantaged Business	-	8.9%
HUBZone Small Business		3.0%
Women-Owned Business	-	8.1%
Veteran-Owned Small Business		0%*
Service-Disabled Veteran-Owned Small Business	-	3.0%**

If you cannot reach the above-stated targets, you must provide written justification with your subcontracting plan detailing the reasons you cannot meet the requirements.

*(c) While Savannah District does not have a specific target for subcontracting with Veteran-Owned small businesses, this must be addressed in any subcontracting plan.

**(d) Service-disabled Veteran-owned Small Business (SD/VOSB) is a composite of Veteran-Owned Small Business. The SD/VOSB target must be included in the Veteran-Owned small business target.

52.222-23 NOTICE OF REQUIREMENT FOR AFFIRMATIVE ACTION TO ENSURE EQUAL EMPLOYMENT OPPORTUNITY FOR CONSTRUCTION (FEB 1999)

(a) The offeror's attention is called to the Equal Opportunity clause and the Affirmative Action Compliance Requirements for Construction clause of this solicitation.

(b) The goals for minority and female participation, expressed in percentage terms for the Contractor's aggregate workforce in each trade on all construction work in the covered area, are as follows:

Goals for minority participation for each trade	Goals for female participation for each trade
26.2 %	6.9%

These goals are applicable to all the Contractor's construction work performed in the covered area. If the Contractor performs construction work in a geographical area located outside of the covered area, the Contractor shall apply the goals established for the geographical area where the work is actually performed. Goals are published periodically in the Federal Register in notice form, and these notices may be obtained from any Office of Federal Contract Compliance Programs office.

(c) The Contractor's compliance with Executive Order 11246, as amended, and the regulations in 41 CFR 60-4 shall be based on (1) its implementation of the Equal Opportunity clause, (2) specific affirmative action obligations required by the clause entitled "Affirmative Action Compliance Requirements for Construction," and (3) its efforts to meet the goals. The hours of minority and female employment and training must be substantially uniform throughout the length of the contract, and in each trade. The Contractor shall make a good faith effort to employ minorities and women evenly on each of its projects. The transfer of minority or female employees or trainees from Contractor to Contractor, or from project to project, for the sole purpose of meeting the Contractor's goals shall be a violation of the contract, Executive Order 11246, as amended, and the regulations in 41 CFR 60-4. Compliance with the goals will be measured against the total work hours performed.

(d) The Contractor shall provide written notification to the Deputy Assistant Secretary for Federal Contract Compliance, U.S. Department of Labor, within 10 working days following award of any construction subcontract in excess of $10,000 at any tier for construction work under the contract resulting from this solicitation. The notification shall list the --

(1) Name, address, and telephone number of the subcontractor;

(2) Employer's identification number of the subcontractor;

(3) Estimated dollar amount of the subcontract;

(4) Estimated starting and completion dates of the subcontract; and

(5) Geographical area in which the subcontract is to be performed.

(e) As used in this Notice, and in any contract resulting from this solicitation, the "covered area" is North Carolina, Cumberland County, Pope Air Force Base.

(End of provision)

52.225-12 NOTICE OF BUY AMERICAN ACT REQUIREMENT-- CONSTRUCTION MATERIALS UNDER TRADE AGREEMENTS (MAY 2002)

(a) Definitions. Construction material, designated country construction material, domestic construction material, foreign construction material, and NAFTA country construction material, as used in this provision, are defined in the clause of this solicitation entitled “Buy American Act --Construction Materials under Trade Agreements” (Federal Acquisition Regulation (FAR) clause 52.225-11).

(b) Requests for determination of inapplicability. An offeror requesting a determination regarding the inapplicability of the Buy American Act should submit the request to the Contracting Officer in time to allow a determination before submission of offers. The offeror shall include the information and applicable supporting data required by paragraphs (c) and (d) of FAR clause 52.225-11 in the request. If an offeror has not requested a determination regarding the inapplicability of the Buy American Act before submitting its offer, or has not received a response to a previous request, the offeror shall include the information and supporting data in the offer.

(c) Evaluation of offers. (1) The Government will evaluate an offer requesting exception to the requirements of the Buy American Act, based on claimed unreasonable cost of domestic construction materials, by adding to the offered price the appropriate percentage of the cost of such foreign construction material, as specified in paragraph (b)(4)(i) of FAR clause 52.225-11.

(2) If evaluation results in a tie between an offeror that requested the substitution of foreign construction material based on unreasonable cost and an offeror that did not request an exception, the Contracting Officer will award to the offeror that did not request an exception based on unreasonable cost.

(d) Alternate offers. (1) When an offer includes foreign construction material, other than designated country or NAFTA country construction material, that is not listed by the Government in this solicitation in paragraph (b)(3) of FAR clause 52.225-11, the offeror also may submit an alternate offer based on use of equivalent domestic, designated country, or NAFTA country construction material.

(2) If an alternate offer is submitted, the offeror shall submit a separate Standard Form 1442 for the alternate offer, and a separate price comparison table prepared in accordance with paragraphs (c) and (d) of FAR clause 52.225-11 for the offer that is based on the use of any foreign construction material for which the Government has not yet determined an exception applies.

(3) If the Government determines that a particular exception requested in accordance with paragraph (c) of FAR clause 52.225-11 does not apply, the Government will evaluate only those offers based on use of the equivalent domestic, designated country, or NAFTA country construction material, and the offeror shall be required to furnish such domestic, designated country, or NAFTA country construction material. An offer based on use of the foreign construction material for which an exception was requested--

(i) Will be rejected as nonresponsive if this acquisition is conducted by sealed bidding; or

(ii) May be accepted if revised during negotiations.

(End of provision)

52.232-4006 SUBJECT TO AVAILABILITY OF FUNDS STATEMENT (SEP 1999
SASCT) (Ref. AFARS 5101.602-2)

This is a high priority requirement as defined in Army Federal Acquisition Regulation (AFAR) Supplement 5101.602-2. Subject to the availability of funds, the accounting classification will be 2132050 308 8021 P7000 3230 S09133. This statement is not a commitment of funds. Funds are not presently available for this acquisition. No contract award will be made until appropriated funds are made available from which payment for contract purposes can be made.
(End of provision)

52.233-2 SERVICE OF PROTEST (AUG 1996)

(v) Protests, as defined in section 33.101 of the Federal Acquisition Regulation, that are filed directly with an agency, and copies of any protests that are filed with the General Accounting Office (GAO), shall be served on the Contracting Officer (addressed as follows) by obtaining written and dated acknowledgment of receipt from

U.S. Army Corps of Engineers, Savannah District
Contrcting Officer, CESAS-CT-C
100 West Oglethorpe Avenue
Savannah, Georgia 31401

(b) The copy of any protest shall be received in the office designated above within one day of filing a protest with the GAO.

(End of provision)

52.236-27 SITE VISIT (CONSTRUCTION) (FEB 1995)

(a) The clauses at 52.236-2, Differing Site Conditions, and 52.236-3, Site Investigations and Conditions Affecting the Work, will be included in any contract awarded as a result of this solicitation. Accordingly, offerors or quoters are urged and expected to inspect the site where the work will be performed.

(b) Site visits may be arranged during normal duty hours by contacting:

Name: Daniel Davis
Address: CESAS-CD-PSP
527 Interceptor Road, Bldg 255
Pope AFB, North Carolina 28308
Telephone: (910) 907-3130 ext 202

(End of provision)

52.236-4011 Disclosure of Magnitude of Construction (FAR 36.204 and DFARS 236.204)

The estimated price range for this project is between $10,000,000 and $25,000,000.

Section 00110

PROPOSAL SUBMISSION REQUIREMENTS AND INSTRUCTIONS

1. PROPOSAL OVERVIEW

1.1 General. Since the proposal will describe the capability of the offeror to perform any resulting contract, it should be specific and complete in every detail. The proposal should be prepared simply and economically, providing a straight-forward, concise delineation of capabilities to satisfactorily perform the contract. The proposal should be practical, legible, clear, and coherent.

1.2 Proposal Submissions and the Lowest Price Technically Acceptable Process. This process requires offerors to submit their performance and capability information for review and consideration by the Government. Following the review, evaluation, and rating of these proposals, the Government will evaluate price proposals for offerors that have acceptable technical proposals. The technical information contained in the proposal will be reviewed and evaluated by the Government in accordance with the evaluation criteria set out in Section 00120 – EVALUATION MANUAL. Price information will not be rated but will be evaluated in accordance with FAR Part 15.

2. PROPOSAL SUBMISSION INSTRUCTIONS

2.1 Who May Submit. Any legally organized Offeror may submit a proposal.

2.2 Where to Submit. Submit proposal packages to the Savannah District at the address shown in Block 7 of Standard Form 1442.

2.3 Submission Deadline. Proposals must be received by the Savannah District no later than the time and date specified in Block 13 of Standard Form 1442.

2.4 General Requirements.

2.4.1 In order to effectively and equitably evaluate all proposals, the Contracting Officer must receive sufficiently detailed information to allow review and evaluation by the Government.

2.4.2 Tabs. Organized and tab the proposal as shown.

2.4.3 Size of Printed Matter Submissions.

2.4.3.1 Written materials will be on 8-1/2" x 11" paper.

2.4.3.2 Include a detailed table of contents. If more than one binder is used, include the complete table of contents in each. Place any materials submitted but not required by this solicitation, such as company brochures or other information, in appendices following the tabbed sections.

2.4.4 Number of Copies. Submit original and five (5) hard copies of the proposal.

2.4.5 Electronic Copy of Submissions. In addition to the hard copies of the proposal, submit the Proposal on a CD ROM disk. The proposal should be in MS Word, Adobe Acrobat PDF file, or WordPerfect format. The electronic version should either be a single file tabbed in the same order as the hard copy or multiple files hyperlinked to a single table of contents.

2.5 Submission Format

2.5.1 Price Proposal. Complete all portions of the Price Proposal Schedule from Section 00010 and furnish the original in a separate envelope labeled "PRICE PROPOSAL". The technical proposal should not include any price/cost information.

SF 1442

Price Proposal, Section 00010

Section 00600 – Representations and Certificates

Latest Financial Statement

2.5.2 The Technical Proposal will be tabbed and submitted in a three ring binder in the following format:

TECHNICAL PROPOSAL

TAB A - PROPOSAL DATA SHEET – include Offeror's DUNS # and Contractor's CCASS#

TAB B – FACTOR 1-1 Offeror Past Performance Information

PAST PERFORMANCE INFORMATION Sheets

TAB C – FACTOR 1-2 Corporate Relevant Specialized Experience

CORPORATE RELEVANT SPECIALIZED EXPERIENCE Sheets (Example Projects)

TAB D – FACTOR 1-3 Offeror Key Personnel

KEY PERSONNEL EXPERIENCE (Example Projects)

TAB E – FACTOR 1-4 Offeror Key Subcontractors

KEY SUBCONTRACTORS EXPERIENCE (Example Projects)

TAB F – Other Information

2.6 FACTOR 1-1 Offeror Past Performance Information. A sample Past Performance Evaluation Questionnaire is included at the end of this section. Identify three completed (or substantially complete) projects to be used for reference and evaluation purposes, and provide a questionnaire to the Point of Contact for each project. When completed, mail or e-mail these forms to the Savannah District Contract Specialist identified in the sample transmittal letter provided. It is the offeror's responsibility to ensure that the reference documentation is provided. Copies of the evaluation form will be provided to the Savannah District directly from the reference. Projects from which questionnaires are received should have been completed or substantially completed within three years of the date of the solicitation. The Government may contact sources other than those provided by the Offeror for information with respect to past performance. These other sources may include CCASS (Construction Contractor Appraisal Support System), telephone interviews with organizations familiar with the Offeror's performance, and Government personnel with personal knowledge of the Offeror's performance capability. The experience of individuals will not be credited under this factor but will be evaluated under "key personnel".

2.7 FACTOR 1-2 Corporate Relevant Specialized Experience. Provide examples (at least three) of projects for which the offeror has been responsible. The examples should be as similar as possible to this solicitation in project type and scope. Specifically, example projects should cite experience in hydrant fuel construction on a completed

system, and successful start-up of a military or civilian Hydrant Fueling System with features such as Type III pump house and API fuel storage tank in the range of $10M to $15M or higher. Provide references including contract names and telephone numbers for all examples cited. Each example should indicate the general character, scope, location, cost, and date of completion of the project. If the offeror represents the combining of two or more companies for the purpose of this RFP, each company should list project examples. Example projects must have been completed or in progress not later than five years prior to the date of the solicitation. The experience of individuals will not be credited under this factor but will be evaluated under "key personnel".

2.8 FACTOR 1-3 Offeror Key Personnel. Demonstrate specific project experience (minimum of one project, similar to this project, within the last five years) for each of the following key personnel:

Construction Project Manager

Project Superintendent

Contractor Quality Control (CQC) System Manager

The key personnel must have been assigned to the same position they will be assigned to for this project and must have been in that role for the majority of the construction period.

2.9 FACTOR 1-4 Offeror Key Subcontractors. The Offeror must demonstrate specific project experience (minimum of one project, similar to this project, within the last five years) for each of the following key subcontractors:

Mechanical Subcontractor: The Mechanical Subcontractor must indicate fuel systems experience.

Electrical Subcontractor: The Electrical Subcontractor must indicate Class I, Division I & II fuels experience.

Steel Fabricator: The Steel Fabricator must indicate experience in construction of 5,000 barrel or larger American Petroleum Institute (API) fuel Storage tanks.

4. EXCEPTIONS

Failure to conform to the contractual terms and conditions of the solicitation (e.g., standard company terms and conditions) may result in a determination to reject a proposal.

5. RESTRICTIONS

Incomplete proposals. Failure to submit all the data indicated in this section may be cause for determining a proposal incomplete. Incomplete proposals will not be considered for further evaluation or subsequent award.

PROPOSAL DATA SHEET

POL Storage Complex
Pope Air Force Base, North Carolina

NOTE TO OFFERORS
This OFFEROR PERFORMANCE CAPABILITY PROPOSAL DATA SHEET must be completed and attached as the first page of the body of your proposal. The information required by this data sheet may be completed directly on this form or attached to the form as supplemental data sheets.

1. NAME OF OFFEROR.

Name of Offeror(s):

If a joint venture or contractor-subcontractor association of firms, list the individual firms and briefly describe the nature of the association.

Firm 1:

Firm 2:

Nature of Association:

2. DUNS NUMBER FOR OFFEROR
(If more than one DUNS number is to be considered, explain affiliation to Offeror)

3. CCASS INDENTIFICATION FOR OFFEROR

4. AUTHORIZED NEGOTIATORS. FAR 52.215-11

The offeror represents that the following persons are authorized to negotiate on its behalf with the Government in connection with this Request for Proposals (RFP). List names, titles, and telephone number of the authorized negotiator.

Name of Person Authorized to Negotiate:

Negotiator's Address:

Negotiator's Telephone:

PROPOSAL DATA SHEET

(Continued)

5. FACTOR 1-1: PAST PERFORMANCE INFORMATION.

5.1 On an attached sheet, provide information for three in-progress or completed projects, preferably of similar design or features, constructed by the offeror to be used for reference and evaluation purposes. These should be the same projects for which Past Performance Evaluation Questionnaires have been provided.

For each project provide the following information:

Project Title:

Location:

Contract number:

Procuring activity:

Procurement point of contact and telephone number:

Construction period (month/year start to month/year end or percent complete if construction is underway):

Address of building(s):

Address and telephone number of owner:

Indicate type of project (private sector, Government, planned unit development, etc.):

General description of project:

Total cost:

Total cost of all modifications:

5.2 On an attached sheet, list all contracts with the Government within the last three years. Indicate Government contract number and contracting agency (with contact names and telephone numbers).

PROPOSAL DATA SHEET

(Continued)

6. FACTOR 1-2: CORPORATE RELEVANT SPECIALIZED EXPERIENCE.

6.1 On an attached sheet, provide information for substantially complete or completed projects within the last five years that are similar in terms of cost, complexity, design or features, that have been constructed by the offeror to be used for reference and evaluation purposes. For each project provide the following information:

Project Title:

Location:

Contract number:

Nature of involvement in this project, i.e. General Contractor, subcontractor, designer:

Procuring activity:

Procurement point of contact and telephone number:

Construction period (month/year start to month/year end or percent complete if construction is underway):

Address of building(s):

Address and telephone number of owner:

Indicate type of project (private sector, Government, planned unit development, etc.):

General description of project:

Total cost:

PROPOSAL DATA SHEET

(Continued)

7. FACTOR 1-3: OFFEROR KEY PERSONNEL

7.1 On an attached sheet, provide information for Key Personnel experience on similar projects. Provide information for the Construction Project Manager, Project Superintendent and Contractor Quality Control (CQC) System Manager. For each individual provide the following information:

Name of Individual:

Assigned Position:

Dates (month/year) assigned to project:

Company this individual worked for:

Project Title and location:

Procuring activity:

Procurement point of contact and telephone number:

Construction period (month/year start to month/year end or percent complete if construction is underway):

Address of building(s):

Address and telephone number of owner:

General description of project:

Total cost:

PROPOSAL DATA SHEET

(Continued)

8. **FACTOR 1-4: OFFEROR KEY SUBCONTRACTORS**

8.1 On an attached sheet, provide information for Key Subcontractor experience on similar projects. Provide information for the Mechanical Subcontractor, Electrical Subcontractor, and Steel Fabricator. For each project provide the following information:

Project Title:

Location:

Contract number:

Nature of involvement in this project, i.e. General Contractor, subcontractor, designer:

Name of Prime Contractor if Nature of Involvement was Subcontractor:

Procuring activity:

Procurement point of contact and telephone number:

Construction period (month/year start to month/year end or percent complete if construction is underway):

Address of building(s):

Address and telephone number of owner:

Indicate type of project (private sector, Government, planned unit development, etc.):

General description of project:

Total cost:

SAMPLE TRANSMITTAL LETTER
AND
PAST PERFORMANCE EVALUATION QUESTIONNAIRE

Date: _____

To: _____
_____
_____

We have listed your firm as a reference for work we have performed for you as listed below. Our firm has submitted a proposal under a project advertised by the U.S. Army Corps of Engineers, Savannah District: **POL Storage Complex, Pope AFB, North Carolina**. In accordance with Federal Acquisition Regulations (FAR), an evaluation of our firm's past performance will be completed by the Corps of Engineers. Your candid response to the attached questionnaire will assist the evaluation team in this process.

We understand that you have a busy schedule and your participation in this evaluation is greatly appreciated. Please complete the enclosed questionnaire as thoroughly as possible. Space is provided for comments. Understand that while the responses to this questionnaire may be released to the offeror, FAR 15.306 (e)(4) prohibits the release of the names of the persons providing the responses. Complete confidentiality will be maintained. Furthermore, a questionnaire has also been sent to _____ of your organization. Only one response from each office is required. If at all possible, we suggest that you individually answer this questionnaire and then coordinate your responses with that of _____, to forge a consensus on one overall response from your organization.

Please send your completed questionnaire to the following address to arrive NOT LATER THAN _____(edit with the date and time set for receipt of Proposals_____ to:

U.S. Army Engineer District, Savannah
Contracting Division (CESAS-CT-C)
ATTN: Donna Knight
100 W. Oglethorpe Ave.
Savannah, GA 31401

The questionnaires can also be e-mailed to: donna.s.knight@sas02.usace.army.mil. If you have questions regarding the attached questionnaire, or require assistance, please contact Donna Knight at 912-652-5504. Thank you for your assistance.

PAST PERFORMANCE EVALUATION QUESTIONNAIRE

DACA21-03-R-0021

Upon completion of this form, please send directly to the U.S. Army Corps of Engineers in the enclosed addressed envelope (U.S. Army Engineer District, Savannah, Contracting Division (CESAS-CT-C) ATTN: Donna Knight, 100 W. Oglethorpe Avenue, Savannah, GA 31401) or e-mail to donna.s.knight@sas02.usace.army.mil. Do not return this form to our offices. Thank you.

1. Contractor/Name & Address (City and State):

2. Type of Contract: Fixed Price _____ Cost Reimbursement _____
Other (Specify) _____

3. Title of Project/Contract Number:

_____

_____

_____

4. Description of Work: (Attach additional pages as necessary)

5. Complexity of Work: High _____ Mid _____ Routine _____

6. Location of Work:_____

7. Date of Award: _____

8. Status: Active _____ (provide percent complete)

Complete _____ (provide completion date)

9. Name, address and telephone number of Contracting Officer's Technical Representative:

10. QUALITY OF CONSTRUCTION:

Evaluate the contractor's performance in complying with contract requirements, quality achieved and overall technical expertise demonstrated.

	Compliance with Contract Requirements	Quality Achieved	Technical Expertise
Outstanding			
Above Average			
Satisfactory			
Marginal			
Unsatisfactory or Experienced Significant Problems			

Remarks: _____

_____

_____

_____

_____

11. TIMELINESS OF PERFORMANCE:

To what extent did the contractor meet the contract and/or individual task order schedules if the contract was an indefinite delivery type contract?

Completed Substantially Ahead of Schedule (Outstanding)	
Completed on Schedule with no Time Delays (Above Average)	
Completed on Schedule with Minor Delays Under Extenuating Circumstances (Satisfactory)	
Completed Behind Schedule (Marginal)	

Experienced Significant Delays without Justification (Unsatisfactory)	

Remarks: _____

_____

_____

_____

_____

12. DOCUMENTATION

To what extent were the contractor's reports and documentation accurate, complete and submitted in a timely manner?

Outstanding Documentation	
Above Average Documentation	
Satisfactory Documentation	
Marginal Documentation	
Unsatisfactory or Experienced Significant Documentation Problems	

Remarks:_____

_____

_____

_____

_____

13. CUSTOMER SATISFACTION:

To what extent were the end users satisfied with:

	Quality	Cost	Schedule
Exceptionally Satisfied (Outstanding)			
Highly Satisfied (Above Average)			
Satisfied (Satisfactory)			
Somewhat Dissatisfied (Marginal)			
Highly Dissatisfied			

Remarks:_____

_____

_____

_____

_____

14. SUBCONTRACTOR MANAGEMENT

How well did the contractor manage and coordinate subcontractors, suppliers, and the labor force?

Outstanding	
Above Average	
Satisfactory	
Marginal	
Unsatisfactory	

Remarks:_____

_____

_____

_____

_____

15. If given the opportunity, would you work with this contractor again?

Yes _____ No _____ Not Sure _____

Remarks: _____

_____

_____

_____

_____

16. OTHER REMARKS:

Use the space below to provide other information related to the contractor's performance. This may include the contractor's selection and management of subcontractors, flexibility in dealing with contract challenges, their overall concern for the Government's interest (if applicable), project awards received, etc.

_____

_____

_____

_____

_____

_____

_____

Section 00120

EVALUATION MANUAL

1. GENERAL

This document establishes a uniform evaluation procedure for the technical evaluation phase of the solicitation based on criterion identified in the Solicitation. The Source Selection Evaluation Board (SSEB) will evaluate each proposal individually using the qualitative procedures that follow. Each proposal will be reviewed and rated by each of the evaluators. During this process, discrepancies between evaluations will be discussed and resolved within the SSEB. Following the completion of the individual evaluations, a consensus evaluation will be derived.

2. PROPOSAL REQUIREMENTS

2.1 Section 00110, Proposal Submission Requirements and Instructions, identifies all the necessary submittal information to be included in the proposals. Proposals which reach the evaluation stage have been reviewed by Contracting Division to ensure that they are complete and responsive. All proposals which are provided to the evaluation team will be evaluated and rated.

2.2 Past Performance Questionnaires. Each Offeror has been requested to have at least three questionnaires from previous projects completed and forwarded directly to the Savannah District for use by the evaluation team in past performance evaluation and risk analysis. The Government may contact the points of contact indicated on these questionnaires for additional information, and to ensure validity of the information received. The Government may contact sources other than those provided by the Offeror for information with respect to past performance. These other sources may include CCASS (Construction Contractor Appraisal Support System), telephone interviews, and Government personnel with personal knowledge of the Offeror's performance capability.

3. INDIVIDUAL PROPOSAL RATING WORKSHEETS

3.1 Worksheets are provided on the following pages that the evaluators will use to review and rate the proposals.

3.2 Comments are required to support all ratings.

4. RATING METHODOLOGY

4.1 Proposals will be evaluated in each Evaluation Factor based on the following rating scheme:

4.2 **Yes - No Ratings.** Where the specific evaluation sheets indicate a YES – NO Rating these items will be treated as information items. They are included in the evaluation worksheets to ensure a similar focus among the evaluators and to ensure that individual evaluators do not overlook proposal information provided.

4.3 **Go – No Go Ratings.**

4.3.1 **Go**. The technical proposal conforms to the Solicitation requirements and presents low risk to the Government.

4.3.2 **No-Go**. The proposal does not conform to the Solicitation and presents an unacceptably high risk to the Government.

5. EVALUATION FACTORS

5.1 **FACTOR 1-1: OFFEROR PAST PERFORMANCE.** The Government will evaluate the offeror's past performance using the sources available to it including, the example projects identified by the Offeror, Past Performance Evaluation Questionnaires received and CCASS. Offerors may be provided an opportunity to address any negative past performance information about which the Offeror has not previously had an opportunity to respond. The Government treats an Offeror's lack of past performance as neutral, that is, having no positive or negative evaluation significance. The experience of individuals will not be credited under this factor but will be evaluated under "key personnel". The Government will evaluate past performance based on the elements listed below:

Quality of Construction. Based on information provided in the questionnaire and other information, the Government will assess the quality of the actual construction undertaken and the standards of workmanship exhibited by the Offeror's team.

Timeliness of Performance. The Government will evaluate all information available with respect to the Offeror completing past projects within the scheduled completion times.

Documentation. The Government will evaluate all information available with respect to the timeliness and quality of the documentation, reports, and other written materials completed by the Offeror on past projects.

Customer Satisfaction. The Government will evaluate all information available with respect to the Offeror's past customer satisfaction, cooperation with customers, and interaction on past projects.

Subcontractor Management. The Government will evaluate all information available with respect to the Offeror's management of subcontractors on past projects.

5.2 FACTOR 1-2: CORPORATE RELEVANT SPECIALIZED EXPERIENCE. The Government will review the example projects provided by the Offeror to evaluate and rate the recent experience of the Offeror in similar projects. The example projects should closely resemble the project identified in this solicitation. Offerors are encouraged to provide descriptive analysis of why they feel their example projects meet the criteria for corporate relevant specialized experience; see paragraph 2.7 in Section 00110, Corporate Relevant Specialized Experience. If the Offeror cannot provide suitable relevant experience and the evaluators consider that the information provided indicates that the Offeror has no relevant experience, a determination will be made as to the risk this lack of corporate experience presents to the Government and the proposal may be rated NO-GO. The experience of individuals will not be credited under this factor but will be evaluated under "key personnel".

5.3 FACTOR 1-3: OFFEROR KEY PERSONNEL. The Government will review the key personnel provided by the Offeror to evaluate and rate the recent experience of the key personnel in similar projects. The key personnel example projects should closely resemble the project identified in this solicitation. Offerors are encouraged to provide descriptive analysis of why they feel their key personnel meet the criteria for key personnel experience; see paragraph 2.8 in Section 00110, Offeror Key Personnel. If the Offeror cannot provide suitable key personnel with relevant experience and the evaluators consider that the information provided indicates that the key personnel have no relevant experience, a determination will be made as to the risk this lack of key personnel experience presents to the Government and the proposal may be rated NO-GO.

5.4 FACTOR 1-4: OFFEROR KEY SUBCONTRACTORS. The Government will review the key subcontractors provided by the Offeror to evaluate and rate the recent experience of the key subcontractors in similar projects. The key subcontractors example projects should closely resemble the project identified in this solicitation. Offerors are encouraged to provide descriptive analysis of why they feel their key subcontractors meet the criteria for key subcontractor experience; see paragraph 2.9in Section 00110, Offeror Key Subcontractors. If the Offeror cannot provide suitable key subcontractors with relevant experience and the evaluators consider that the information provided indicates that the key subcontractors have no relevant experience, a determination will be made as to the risk this lack of key subcontractor experience presents to the Government and the proposal may be rated NO-GO.

6. OVERALL PROPOSAL RATING

6.1 Each member of the Government evaluation team will consider all information provided in the proposal. Once these individual analyses are completed, the team will meet and determine a rating for each of the evaluation factors by consensus decision.

6.2 Following completion of the consensus rating, each proposal will be assigned a single overall GO or NO-GO rating. This final overall rating, along with ratings on individual factors, will be provided to the Contracting Officer/Source Selection Authority and used in making the determination which Offerors are eligible for award.

6.3 It is the responsibility of the Source Selection Board to provide and document sufficient strengths, weaknesses, and omissions to support the GO or NO-GO rating for each factor as well as the overall rating. Comments are required for all ratings.

7. **BASIS OF AWARD**. Award will be made to that Offeror whose proposal is technically acceptable and has the lowest price that is determined to be fair and reasonable.

Offeror: _____

Evaluator:_____

Factor 1-1 Summary and Overall Rating

OFFEROR PAST PERFROMANCE INFORMATION

Item No.	Description	Rating
1.	Were three Past Performance Questionnaires Received?	YES/NO
2.	Do All the Questionnaires Received Reflect Projects Completed Within the Last 3 Years?	YES/NO
3.	Were CCASS Ratings available?	YES/NO
4.	Do you have any Personal Experience with the Offeror?	YES/NO
5.	PAST PERFORMANCE	
OVERALL FACTOR 1-1 RATING		

- **STRENGTHS.**

- **WEAKNESSES.**

- **OTHER.**

Offeror: _____

Evaluator:_____

Factor 1-2 Summary and Overall Rating

OFFEROR CORPORATE RELEVANT SPECIALIZED EXPERIENCE

Item No.	Description	Rating
1.	Does the Proposal Include an Example Project Listing with Suitable Explanation?	YES – NO
2.	Offeror's Relevant Experience	
OVERALL FACTOR 1-2 RATING		

- **STRENGTHS.**

- **WEAKNESSES.**

- **OTHER.**

Offeror: _____

Evaluator:_____

Factor 1-3 Summary and Overall Rating

OFFEROR KEY PERSONNEL

Item No.	Description	Rating
1.	Does the Proposal Include a Key Personnel List?	YES – NO
2.	Offeror's Key Personnel	
OVERALL FACTOR 1-3 RATING		

- **STRENGTHS.**

- **WEAKNESSES.**

- **OTHER.**

Offeror: _____

Evaluator:_____

Factor 1-4 Summary and Overall Rating

OFFEROR KEY SUBCONTRACTORS

Item No.	Description	Rating
1.	Does the Proposal Include a Key Subcontractor List?	YES – NO
2.	Offeror's Key Subcontractors	
OVERALL FACTOR 1-4 RATING		

- **STRENGTHS.**

- **WEAKNESSES.**

- **OTHERS.**

Offeror: _____

Evaluator:_____

Summary and Overall Rating

Item No.	Description	Rating
1.	Factor 1-1 Offeror Past Performance Information	
2.	Factor 1-2 Corporate Relevant Specialized Experience	
3.	Factor 1-3 Offeror Key Personnel	
4.	Factor 1-4 Offeror Key Subcontractors	
OVERALL RATING		

_____
Board Member

Offeror: _____

Factor No.	Description	Board Member 1	Board Member 2	Board Member 3	Board Member 4	Board Member 5	CONSENSUS
1-1	**Offeror Past Performance Information**						
1-2	**Corporate Relevant Specialized Experience**						
1-3	**Offeror Key Personnel**						
1-4	**Offeror Key Subcontractors**						
OVERALL RATING							

_____
Borad Member 1

_____
Board Member 2

_____
Board Member 3

_____
Board Member 4

_____
Board Chairman

Offeror: _____

CONSENSUS SUMMARY RATING

FACTOR 1-1 OFFEROR PAST PERFORMANCE INFORMATION

STRENGTHS:

WEAKNESSES:

OTHER COMMENTS:

Offeror: _____

CONSENSUS SUMMARY RATING

(Continued)

FACTOR 1-2 CORPORATE RELEVANT SPECIALIZED EXPERIENCE

STRENGTHS:

WEAKNESSES:

OTHER COMMENTS:

Offeror: _____

CONSENSUS SUMMARY RATING

(Continued)

FACTOR 1-3 OFFEROR KEY PERSONNEL

STRENGTHS:

WEAKNESSES:

OTHER COMMENTS:

Offeror: _____

CONSENSUS SUMMARY RATING

(Continued)

FACTOR 1-4 OFFEROR KEY SUBCONTRACTORS

STRENGTHS:

WEAKNESSES:

OTHER COMMENTS:

Section 00600 - Representations & Certifications

CLAUSES INCORPORATED BY FULL TEXT

52.222-38 COMPLIANCE WITH VETERANS' EMPLOYMENT REPORTING REQUIREMENTS (DEC 2001)

By submission of its offer, the offeror represents that, if it is subject to the reporting requirements of 38 U.S.C. 4212(d) (i.e., if it has any contract containing Federal Acquisition Regulation clause 52.222-37, Employment Reports on Special Disabled Veterans, Veterans of the Vietnam Era, and Other Eligible Veterans), it has submitted the most recent VETS-100 Report required by that clause.

(End of provision)

52.203-2 CERTIFICATE OF INDEPENDENT PRICE DETERMINATION (APR 1985)

(a) The offeror certifies that --

(vi) The prices in this offer have been arrived at independently, without, for the purpose of restricting competition, any consultation, communication, or agreement with any other offeror or competitor relating to –

52 Those prices,

(ii) The intention to submit an offer, or

(iii) The methods of factors used to calculate the prices offered:

(2) The prices in this offer have not been and will not be knowingly disclosed by the offeror, directly or indirectly, to any other offeror or competitor before bid opening (in the case of a sealed bid solicitation) or contract award (in the case of a negotiated solicitation) unless otherwise required by law; and

(3) No attempt has been made or will be made by the offeror to induce any other concern to submit or not to submit an offer for the purpose of restricting competition.

(b) Each signature on the offer is considered to be a certification by the signatory that the signatory --

(1) Is the person in the offeror's organization responsible for determining the prices offered in this bid or proposal, and that the signatory has not participated and will not participate in any action contrary to subparagraphs (a)(1) through (a)(3) of this provision; or

(2) (i) Has been authorized, in writing, to act as agent for the following principals in certifying that those principals have not participated, and will not participate in any action contrary to subparagraphs (a)(1) through (a)(3) of this provison _____ (insert full name of person(s) in the offeror's organization responsible for determining the prices offered in this bid or proposal, and the title of his or her position in the offeror's organization);

(ii) As an authorized agent, does certify that the principals named in subdivision (b)(2)(i) above have not participated, and will not participate, in any action contrary to subparagraphs (a)(1) through (a)(3) above; and

(iii) As an agent, has not personally participated, and will not participate, in any action contrary to subparagraphs (a)(1) through (a)(3) of this provision.

(c) If the offeror deletes or modifies subparagraph (a)(2) of this provision, the offeror must furnish with its offer a signed statement setting forth in detail the circumstances of the disclosure.

(End of clause)

52.203-11 CERTIFICATION AND DISCLOSURE REGARDING PAYMENTS TO INFLUENCE CERTAIN FEDERAL TRANSACTIONS (APR 1991)

(a) The definitions and prohibitions contained in the clause, at FAR 52.203-12, Limitation on Payments to Influence Certain Federal Transactions, included in this solicitation, are hereby incorporated by reference in paragraph (b) of this Certification.

(b) The offeror, by signing its offer, hereby certifies to the best of his or her knowledge and belief that on or after December 23, 1989,--

(1) No Federal appropriated funds have been paid or will be paid to any person for influencing or attempting to influence an officer or employee of any agency, a Member of Congress, an officer or employee of Congress, or an employee of a Member of Congress on his or her behalf in connection with the awarding of any Federal contract, the making of any Federal grant, the making of any Federal loan, the entering into of any cooperative agreement, and the extension, continuation, renewal, amendment or modification of any Federal contract, grant, loan, or cooperative agreement;

(2) If any funds other than Federal appropriated funds (including profit or fee received under a covered Federal transaction) have been paid, or will be paid to any person for influencing or attempting to influence an officer or employee of any agency, a Member of Congress, an officer or employee of Congress or an employee of a Member of Congress on his or her behalf in connection with this solicitation, the offeror shall complete and submit, with its offer, OMB standard form LLL, Disclosure of Lobbying Activities, to the Contracting Officer; and

(3) He or she will include the language of this certification in all subcontract awards at any tier and require that all recipients of subcontract awards in excess of $100,000 shall certify and disclose accordingly.

(vii) Submission of this certification and disclosure is a prerequisite for making or entering into this contract imposed by section 1352, title 31, United States Code. Any person who makes an expenditure prohibited under this provision, shall be subject to a civil penalty of not less than $10,000, and not more than $100,000, for each such failure.

(End of provision)

52.204-5 WOMEN-OWNED BUSINESS (OTHER THAN SMALL BUSINESS) (MAY 1999)

(a) Definition. Women-owned business concern, as used in this provision, means a concern that is at least 51 percent owned by one or more women; or in the case of any publicly owned business, at least 51 percent of its stock is owned by one or more women; and whose management and daily business operations are controlled by one or more women.

(b) Representation. [Complete only if the offeror is a women-owned business concern and has not represented itself as a small business concern in paragraph (b)(1) of FAR 52.219-1, Small Business Program Representations, of this solicitation.] The offeror represents that it ( ) is a women-owned business concern.

(End of provision)

52.204-4003 TAXPAYER IDENTIFICATION

Taxpayer Identification Number (TIN)," as used in this provision, means the number required by the Internal Revenue Service (IRS) to be used by the offeror in reporting income tax and other returns. The TIN may be either a Social Security Number or an Employer Identification Number.

(a) Taxpayer Identification Number (TIN).

___ TIN:._____

___ TIN has been applied for.

___ TIN is not required because:

___ Offeror is a nonresident alien, foreign corporation, or foreign partnership that does not have income effectively connected with the conduct of a trade or business in the United States and does not have an office or place of business or a fiscal paying agent in the United States;

___ Offeror is an agency or instrumentality of a foreign government;

___ Offeror is an agency or instrumentality of the Federal Government.

(b) Type of organization.

___ Sole proprietorship;

___ Partnership;

___ Corporate entity (not tax-exempt);

___ Corporate entity (tax-exempt);

___ Government entity (Federal, State, or local);

___ Foreign government;

___ International organization per 26 CFR 1.6049-4;

___ Other _____

(c) Common parent.

___ Offeror is not owned or controlled by a common parent

___ Name and TIN of common parent:

Name _____

TIN _____

(End of provision)

52.209-5 CERTIFICATION REGARDING DEBARMENT, SUSPENSION, PROPOSED DEBARMENT, AND OTHER RESPONSIBILITY MATTERS (DEC 2001)

(a)(1) The Offeror certifies, to the best of its knowledge and belief, that--

(i) The Offeror and/or any of its Principals --

(A) Are ( ) are not ( ) presently debarred, suspended, proposed for debarment, or declared ineligible for the award of contracts by any Federal agency;

(B) Have ( ) have not ( ), within a three-year period preceding this offer, been convicted of or had a civil judgment rendered against them for: commission of fraud or a criminal offense in connection with obtaining, attempting to obtain, or performing a public (Federal, state, or local) contract or subcontract; violation of Federal or state antitrust statutes relating to the submission of offers; or commission of embezzlement, theft, forgery, bribery, falsification or destruction of records, making false statements, tax evasion, or receiving stolen property; and

(C) Are ( ) are not ( ) presently indicted for, or otherwise criminally or civilly charged by a governmental entity with, commission of any of the offenses enumerated in subdivision (a)(1)(i)(B) of this provision.

(ii) The Offeror has ( ) has not ( ), within a three-year period preceding this offer, had one or more contracts terminated for default by any Federal agency.

(2) "Principals," for the purposes of this certification, means officers; directors; owners; partners; and, persons having primary management or supervisory responsibilities within a business entity (e.g., general manager; plant manager; head of a subsidiary, division, or business segment, and similar positions).

THIS CERTIFICATION CONCERNS A MATTER WITHIN THE JURISDICTION OF AN AGENCY OF THE UNITED STATES AND THE MAKING OF A FALSE, FICTITIOUS, OR FRAUDULENT CERTIFICATION MAY RENDER THE MAKER SUBJECT TO PROSECUTION UNDER SECTION 1001, TITLE 18, UNITED STATES CODE.

(b) The Offeror shall provide immediate written notice to the Contracting Officer if, at any time prior to contract award, the Offeror learns that its certification was erroneous when submitted or has become erroneous by reason of changed circumstances.

(c) A certification that any of the items in paragraph (a) of this provision exists will not necessarily result in withholding of an award under this solicitation. However, the certification will be considered in connection with a determination of the Offeror's responsibility. Failure of the Offeror to furnish a certification or provide such additional information as requested by the Contracting Officer may render the Offeror nonresponsible.

(d) Nothing contained in the foregoing shall be construed to require establishment of a system of records in order to render, in good faith, the certification required by paragraph (a) of this provision. The knowledge and information of an Offeror is not required to exceed that which is normally possessed by a prudent person in the ordinary course of business dealings.

(e) The certification in paragraph (a) of this provision is a material representation of fact upon which reliance was placed when making award. If it is later determined that the Offeror knowingly rendered an erroneous certification, in addition to other remedies available to the Government, the Contracting Officer may terminate the contract resulting from this solicitation for default.

(End of provision)

52.219-1 SMALL BUSINESS PROGRAM REPRESENTATIONS (APR 2002) - ALTERNATE I (APR 2002)

(a)(1) The North American Industry Classification System (NAICS) code for this acquisition is 236210.

(2) The small business size standard is $28.5 million.

(3) The small business size standard for a concern which submits an offer in its own name, other than on a construction or service contract, but which proposes to furnish a product which it did not itself manufacture, is 500 employees.

(b) Representations. (1) The offeror represents as part of its offer that it ( ) is, ( ) is not a small business concern.

(2) (Complete only if the offeror represented itself as a small business concern in paragraph (b)(1) of this provision.) The offeror represents, for general statistical purposes, that it ( ) is, ( ) is not a small disadvantaged business concern as defined in 13 CFR 124.1002.

(3) (Complete only if the offeror represented itself as a small business concern in paragraph (b)(1) of this provision.) The offeror represents as part of its offer that it ( ) is, ( ) is not a women-owned small business concern.

(4) (Complete only if the offeror represented itself as a small business concern in paragraph (b)(1) of this provision.) The offeror represents as part of its offer that it ( ) is, ( ) is not a veteran-owned small business concern.

(5) (Complete only if the offeror represented itself as a veteran-owned small business concern in paragraph (b)(4) of this provision.) The offeror represents as part of its offer that it ( ) is, ( ) is not a service-disabled veteran-owned small business concern.

(6) [Complete only if the offeror represented itself as a small business concern in paragraph (b)(1) of this provision.] The offeror represents, as part of its offer, that--

(i) It ( ) is, ( ) is not a HUBZone small business concern listed, on the date of this representation, on the List of Qualified HUBZone Small Business Concerns maintained by the Small Business Administration, and no material change in ownership and control, principal office, or HUBZone employee percentage has occurred since it was certified by the Small Business Administration in accordance with 13 CFR part 126; and

(ii) It ( ) is, ( ) is not a joint venture that complies with the requirements of 13 CFR part 126, and the representation in paragraph (b)(6)(i) of this provision is accurate for the HUBZone small business concern or concerns that are participating in the joint venture. (The offeror shall enter the name or names of the HUBZone small business concern or concerns that are participating in the joint venture:_____.) Each HUBZone small business concern participating in the joint venture shall submit a separate signed copy of the HUBZone representation.

(7) (Complete if offeror represented itself as disadvantaged in paragraph (b)(2) of this provision.) The offeror shall check the category in which its ownership falls:

____ Black American.

____ Hispanic American.

____ Native American (American Indians, Eskimos, Aleuts, or Native Hawaiians).

____ Asian-Pacific American (persons with origins from Burma, Thailand, Malaysia, Indonesia, Singapore, Brunei, Japan, China, Taiwan, Laos, Cambodia (Kampuchea), Vietnam, Korea, The Philippines, U.S. Trust Territory of the Pacific Islands (Republic of Palau), Republic of the Marshall Islands, Federated States of Micronesia, the Commonwealth of the Northern Mariana Islands, Guam, Samoa, Macao, Hong Kong, Fiji, Tonga, Kiribati, Tuvalu, or Nauru).

____ Subcontinent Asian (Asian-Indian) American (persons with origins from India, Pakistan, Bangladesh, Sri Lanka, Bhutan, the Maldives Islands, or Nepal).

____ Individual/concern, other than one of the preceding.

(c) Definitions. As used in this provision--

Service-disabled veteran-owned small business concern--

(1) Means a small business concern--

(i) Not less than 51 percent of which is owned by one or more service-disabled veterans or, in the case of any publicly owned business, not less than 51 percent of the stock of which is owned by one or more service-disabled veterans; and

(ii) The management and daily business operations of which are controlled by one or more service-disabled veterans or, in the case of a veteran with permanent and severe disability, the spouse or permanent caregiver of such veteran.

(2) Service-disabled veteran means a veteran, as defined in 38 U.S.C. 101(2), with a disability that is service-connected, as defined in 38 U.S.C. 101(16).

"Small business concern," means a concern, including its affiliates, that is independently owned and operated, not dominant in the field of operation in which it is bidding on Government contracts, and qualified as a small business under the criteria in 13 CFR Part 121 and the size standard in paragraph (a) of this provision.

Veteran-owned small business concern means a small business concern--

(1) Not less than 51 percent of which is owned by one or more veterans (as defined at 38 U.S.C. 101(2)) or, in the case of any publicly owned business, not less than 51 percent of the stock of which is owned by one or more veterans; and

(2) The management and daily business operations of which are controlled by one or more veterans.

"Women-owned small business concern," means a small business concern --

(1) That is at least 51 percent owned by one or more women or, in the case of any publicly owned business, at least 51 percent of the stock of which is owned by one or more women; or

(2) Whose management and daily business operations are controlled by one or more women.

(d) Notice.

(1) If this solicitation is for supplies and has been set aside, in whole or in part, for small business concerns, then the clause in this solicitation providing notice of the set-aside contains restrictions on the source of the end items to be furnished.

(2) Under 15 U.S.C. 645(d), any person who misrepresents a firm's status as a small, HUBZone small, small disadvantaged, or women-owned small business concern in order to obtain a contract to be awarded under the preference programs established pursuant to section 8(a), 8(d), 9, or 15 of the Small Business Act or any other provision of Federal law that specifically references section 8(d) for a definition of program eligibility, shall--

(i) Be punished by imposition of fine, imprisonment, or both;

(ii) Be subject to administrative remedies, including suspension and debarment; and

(iii) Be ineligible for participation in programs conducted under the authority of the Act.

(End of provision)

52.222-22 PREVIOUS CONTRACTS AND COMPLIANCE REPORTS (FEB 1999)

The offeror represents that --

(a) ( ) It has, ( ) has not participated in a previous contract or subcontract subject to the Equal Opportunity clause of this solicitation;

(b) ( ) It has, ( ) has not, filed all required compliance reports; and

(c) Representations indicating submission of required compliance reports, signed by proposed subcontractors, will be obtained before subcontract awards.

(End of provision)

52.223-4 RECOVERED MATERIAL CERTIFICATION (OCT 1997)

As required by the Resource Conservation and Recovery Act of 1976 (42 U.S.C. 6962(c)(3)(A)(i)), the offeror certifies, by signing this offer, that the percentage of recovered materials to be used in the performance of the contract will be at least the amount required by the applicable contract specifications.

(End of provision)

52.223-13 CERTIFICATION OF TOXIC CHEMICAL RELEASE REPORTING (OCT 2000)

(a) Submission of this certification is a prerequisite for making or entering into this contract imposed by Executive Order 12969, August 8, 1995.

(b) By signing this offer, the offeror certifies that--

(1) As the owner or operator of facilities that will be used in the performance of this contract that are subject to the filing and reporting requirements described in section 313 of the Emergency Planning and Community Right-to-Know Act of 1986 (EPCRA) (42 U.S.C. 11023) and section 6607 of the Pollution Prevention Act of 1990 (PPA) (42 U.S.C. 13106), the offeror will file and continue to file for such facilities for the life of the contract the Toxic Chemical Release Inventory Form (Form R) as described in sections 313(a) and (g) of EPCRA and section 6607 of PPA; or

(2) None of its owned or operated facilities to be used in the performance of this contract is subject to the Form R filing and reporting requirements because each such facility is exempt for at least one of the following reasons: (Check each block that is applicable.)

( ) (i) The facility does not manufacture, process or otherwise use any toxic chemicals listed under section 313(c) of EPCRA, 42 U.S.C. 11023(c);

( ) (ii) The facility does not have 10 or more full-time employees as specified in section 313.(b)(1)(A) of EPCRA 42 U.S.C. 11023(b)(1)(A);

( ) (iii) The facility does not meet the reporting thresholds of toxic chemicals established under section 313(f) of EPCRA, 42 U.S.C. 11023(f) (including the alternate thresholds at 40 CFR 372.27, provided an appropriate certification form has been filed with EPA);

( ) (iv) The facility does not fall within Standard Industrial Classification Code (SIC) major groups 20 through 39 or their corresponding North American Industry Classification System (NAICS) sectors 31 through 33; or

( ) (v) The facility is not located within any State of the United States, the District of Columbia, the Commonwealth of Puerto Rico, Guam, American Samoa, the United States Virgin Islands, the Northern Mariana Islands, or any other territory or possession over which the United States has jurisdiction.

(End of clause)

252.209-7001 DISCLOSURE OF OWNERSHIP OR CONTROL BY THE GOVERNMENT OF A TERRORIST COUNTRY (MAR 1998)

(a) "Definitions."

As used in this provision --

(a) "Government of a terrorist country" includes the state and the government of a terrorist country, as well as any political subdivision, agency, or instrumentality thereof.

(2) "Terrorist country" means a country determined by the Secretary of State, under section 6(j)(1)(A) of the Export Administration Act of 1979 (50 U.S.C. App. 2405(j)(i)(A)), to be a country the government of which has repeatedly provided support for such acts of international terrorism. As of the date of this provision, terrorist countries include: Cuba, Iran, Iraq, Libya, North Korea, Sudan, and Syria.

(3) "Significant interest" means --

(i) Ownership of or beneficial interest in 5 percent or more of the firm's or subsidiary's securities. Beneficial interest includes holding 5 percent or more of any class of the firm's securities in "nominee shares," "street names," or some other method of holding securities that does not disclose the beneficial owner;

(ii) Holding a management position in the firm, such as a director or officer;

(iii) Ability to control or influence the election, appointment, or tenure of directors or officers in the firm;

(iv) Ownership of 10 percent or more of the assets of a firm such as equipment, buildings, real estate, or other tangible assets of the firm; or

(v) Holding 50 percent or more of the indebtness of a firm.

(b) "Prohibition on award."

In accordance with 10 U.S.C. 2327, no contract may be awarded to a firm or a subsidiary of a firm if the government of a terrorist country has a significant interest in the firm or subsidiary or, in the case of a subsidiary, the firm that owns the subsidiary, unless a waiver is granted by the Secretary of Defense.

(c) "Disclosure."

If the government of a terrorist country has a significant interest in the Offeror or a subsidiary of the Offeror, the Offeror shall disclosure such interest in an attachment to its offer. If the Offeror is a subsidiary, it shall also disclose any significant interest the government of a terrorist country has in any firm that owns or controls the subsidiary. The disclosure shall include --

(1) Identification of each government holding a significant interest; and

(2) A description of the significant interest held by each government.

(End of provision)

252.247-7022 REPRESENTATION OF EXTENT OF TRANSPORTATION BY SEA (AUG 1992)

(a) The Offeror shall indicate by checking the appropriate blank in paragraph (b) of this provision whether transportation of supplies by sea is anticipated under the resultant contract. The term supplies is defined in the Transportation of Supplies by Sea clause of this solicitation.

(b) Representation. The Offeror represents that it:

____ (1) Does anticipate that supplies will be transported by sea in the performance of any contract or subcontract resulting from this solicitation.

____ (2) Does not anticipate that supplies will be transported by sea in the performance of any contract or subcontract resulting from this solicitation.

(c) Any contract resulting from this solicitation will include the Transportation of Supplies by Sea clause. If the Offeror represents that it will not use ocean transportation, the resulting contract will also include the Defense FAR Supplement clause at 252.247-7024, Notification of Transportation of Supplies by Sea.

(End of provision)

Section 00700 - Contract Clauses

CLAUSES INCORPORATED BY FULL TEXT

52.202-1 DEFINITIONS (MAY 2001) --ALTERNATE I (MAR 2001)

(a) Agency head or head of the agency means the Secretary (Attorney General, Administrator, Governor, Chairperson, or other chief official, as appropriate) of the agency, unless otherwise indicated, including any deputy or assistant chief official of the executive agency.

(b) Commercial component means any component that is a commercial item.

(c) Component means any item supplied to the Government as part of an end item or of another component, except that for use in 52.225-9, and 52.225-11 see the definitions in 52.225-9(a) and 52.225-11(a).

(d) Contracting Officer means a person with the authority to enter into, administer, and/or terminate contracts and make related determinations and findings. The term includes certain authorized representatives of the Contracting Officer acting within the limits of their authority as delegated by the Contracting Officer.

(e) Nondevelopmental item means--

(1) Any previously developed item of supply used exclusively for governmental purposes by a Federal agency, a State or local government, or a foreign government with which the United States has a mutual defense cooperation agreement;

(2) Any item described in paragraph (f)(1) of this definition that requires only minor modification or modifications of a type customarily available in the commercial marketplace in order to meet the requirements of the procuring department or agency; or

(3) Any item of supply being produced that does not meet the requirements of paragraph (f)(1) or (f)(2) solely because the item is not yet in use.

(f) "Contracting Officer" means a person with the authority to enter into, administer, and/or terminate contracts and make related determinations and findings. The term includes certain authorized representatives of the Contracting Officer acting within the limits of their authority as delegated by the Contracting Officer.

(g) Except as otherwise provided in this contract, the term "subcontracts" includes, but is not limited to, purchase orders and changes and modifications to purchase orders under this contract.

(End of clause)

52.203-3 GRATUITIES (APR 1984)

(a) The right of the Contractor to proceed may be terminated by written notice if, after notice and hearing, the agency head or a designee determines that the Contractor, its agent, or another representative--

(1) Offered or gave a gratuity (e.g., an entertainment or gift) to an officer, official, or employee of the Government; and

(2) Intended, by the gratuity, to obtain a contract or favorable treatment under a contract.

(b) The facts supporting this determination may be reviewed by any court having lawful jurisdiction.

(c) If this contract is terminated under paragraph (a) of this clause, the Government is entitled--

(1) To pursue the same remedies as in a breach of the contract; and

(2) In addition to any other damages provided by law, to exemplary damages of not less than 3 nor more than 10 times the cost incurred by the Contractor in giving gratuities to the person concerned, as determined by the agency head or a designee. (This subparagraph (c)(2) is applicable only if this contract uses money appropriated to the Department of Defense.)

(d) The rights and remedies of the Government provided in this clause shall not be exclusive and are in addition to any other rights and remedies provided by law or under this contract.

(End of clause)

52.203-5 COVENANT AGAINST CONTINGENT FEES (APR 1984)

(a) The Contractor warrants that no person or agency has been employed or retained to solicit or obtain this contract upon an agreement or understanding for a contingent fee, except a bona fide employee or agency. For breach or violation of this warranty, the Government shall have the right to annul this contract without liability or, in its discretion, to deduct from the contract price or consideration, or otherwise recover, the full amount of the contingent fee.

(b) "Bona fide agency," as used in this clause, means an established commercial or selling agency, maintained by a contractor for the purpose of securing business, that neither exerts nor proposes to exert improper influence to solicit or obtain Government contracts nor holds itself out as being able to obtain any Government contract or contracts through improper influence.

"Bona fide employee," as used in this clause, means a person, employed by a contractor and subject to the contractor's supervision and control as to time, place, and manner of performance, who neither exerts nor proposes to exert improper influence to solicit or obtain Government contracts nor holds out as being able to obtain any Government contract or contracts through improper influence.

"Contingent fee," as used in this clause, means any commission, percentage, brokerage, or other fee that is contingent upon the success that a person or concern has in securing a Government contract.

"Improper influence," as used in this clause, means any influence that induces or tends to induce a Government employee or officer to give consideration or to act regarding a Government contract on any basis other than the merits of the matter.

(End of clause)

52.203-6 RESTRICTIONS ON SUBCONTRACTOR SALES TO THE GOVERNMENT (JUL 1995)

(a) Except as provided in (b) of this clause, the Contractor shall not enter into any agreement with an actual or prospective subcontractor, nor otherwise act in any manner, which has or may have the effect of restricting sales by such subcontractors directly to the Government of any item or process (including computer software) made or furnished by the subcontractor under this contract or under any follow-on production contract.

(b) The prohibition in (a) of this clause does not preclude the Contractor from asserting rights that are otherwise authorized by law or regulation.

(c) The Contractor agrees to incorporate the substance of this clause, including this paragraph (c), in all subcontracts under this contract which exceed $100,000.

52.203-7 ANTI-KICKBACK PROCEDURES. (JUL 1995)

(a) Definitions.

"Kickback," as used in this clause, means any money, fee, commission, credit, gift, gratuity, thing of value, or compensation of any kind which is provided, directly or indirectly, to any prime Contractor, prime Contractor employee, subcontractor, or subcontractor employee for the purpose of improperly obtaining or rewarding favorable treatment in connection with a prime contract or in connection with a subcontract relating to a prime contract.

"Person," as used in this clause, means a corporation, partnership, business association of any kind, trust, joint-stock company, or individual.

"Prime contract," as used in this clause, means a contract or contractual action entered into by the United States for the purpose of obtaining supplies, materials, equipment, or services of any kind.

"Prime Contractor," as used in this clause, means a person who has entered into a prime contract with the United States.

"Prime Contractor employee," as used in this clause, means any officer, partner, employee, or agent of a prime Contractor.

"Subcontract," as used in this clause, means a contract or contractual action entered into by a prime Contractor or subcontractor for the purpose of obtaining supplies, materials, equipment, or services of any kind under a prime contract.

"Subcontractor," as used in this clause, (1) means any person, other than the prime Contractor, who offers to furnish or furnishes any supplies, materials, equipment, or services of any kind under a prime contract or a subcontract entered into in connection with such prime contract, and (2) includes any person who offers to furnish or furnishes general supplies to the prime Contractor or a higher tier subcontractor.

"Subcontractor employee," as used in this clause, means any officer, partner, employee, or agent of a subcontractor.

(b) The Anti-Kickback Act of 1986 (41 U.S.C. 51-58) (the Act), prohibits any person from -

(1) Providing or attempting to provide or offering to provide any kickback;

(2) Soliciting, accepting, or attempting to accept any kickback; or

(3) Including, directly or indirectly, the amount of any kickback in the contract price charged by a prime Contractor to the United States or in the contract price charged by a subcontractor to a prime Contractor or higher tier subcontractor.

(c)(1) The Contractor shall have in place and follow reasonable procedures designed to prevent and detect possible violations described in paragraph (b) of this clause in its own operations and direct business relationships.

(2) When the Contractor has reasonable grounds to believe that a violation described in paragraph (b) of this clause

may have occurred, the Contractor shall promptly report in writing the possible violation. Such reports shall be made to the inspector general of the contracting agency, the head of the contracting agency if the agency does not have an inspector general, or the Department of Justice.

(3) The Contractor shall cooperate fully with any Federal agency investigating a possible violation described in paragraph (b) of this clause.

(4) The Contracting Officer may (i) offset the amount of the kickback against any monies owed by the United States under the prime contract and/or (ii) direct that the Prime Contractor withhold, from sums owed a subcontractor under the prime contract, the amount of any kickback. The Contracting Officer may order the monies withheld under subdivision (c)(4)(ii) of this clause be paid over to the Government unless the Government has already offset those monies under subdivision (c)(4)(i) of this clause. In either case, the Prime Contractor shall notify the Contracting Officer when the monies are withheld.

(5) The Contractor agrees to incorporate the substance of this clause, including this subparagraph (c)(5) but excepting subparagraph (c)(1), in all subcontracts under this contract which exceed $100,000.

52.203-8 CANCELLATION, RESCISSION, AND RECOVERY OF FUNDS FOR ILLEGAL OR IMPROPER ACTIVITY (JAN 1997)

(a) If the Government receives information that a contractor or a person has engaged in conduct constituting a violation of subsection (a), (b), (c), or (d) of Section 27 of the Office of Federal Procurement Policy Act (41 U.S.C. 423) (the Act), as amended by section 4304 of the 1996 National Defense Authorization Act for Fiscal Year 1996 (Pub. L. 104-106), the Government may--

(1) Cancel the solicitation, if the contract has not yet been awarded or issued; or

(2) Rescind the contract with respect to which--

(i) The Contractor or someone acting for the Contractor has been convicted for an offense where the conduct constitutes a violation of subsection 27(a) or (b) of the Act for the purpose of either--

(A) Exchanging the information covered by such subsections for anything of value; or

(B) Obtaining or giving anyone a competitive advantage in the award of a Federal agency procurement contract; or

(ii) The head of the contracting activity has determined, based upon a preponderance of the evidence, that the Contractor or someone acting for the Contractor has engaged in conduct constituting an offense punishable under subsections 27(e)(1) of the Act.

(b) If the Government rescinds the contract under paragraph (a) of this clause, the Government is entitled to recover, in addition to any penalty prescribed by law, the amount expended under the contract.

(c) The rights and remedies of the Government specified herein are not exclusive, and are in addition to any other rights and remedies provided by law, regulation, or under this contract.

(End of clause)

52.203-10 PRICE OR FEE ADJUSTMENT FOR ILLEGAL OR IMPROPER ACTIVITY (JAN 1997)

(a) The Government, at its election, may reduce the price of a fixed-price type contract and the total cost and fee under a cost-type contract by the amount of profit or fee determined as set forth in paragraph (b) of this clause if the head of the contracting activity or designee determines that there was a violation of subsection 27 (a), (b), or (c) of the Office of Federal Procurement Policy Act, as amended (41 U.S.C. 423), as implemented in section 3.104 of the Federal Acquisition Regulation.

(b) The price or fee reduction referred to in paragraph (a) of this clause shall be--

(1) For cost-plus-fixed-fee contracts, the amount of the fee specified in the contract at the time of award;

(2) For cost-plus-incentive-fee contracts, the target fee specified in the contract at the time of award, notwithstanding any minimum fee or "fee floor" specified in the contract;

(3) For cost-plus-award-fee contracts--

(i) The base fee established in the contract at the time of contract award;

(ii) If no base fee is specified in the contract, 30 percent of the amount of each award fee otherwise payable to the Contractor for each award fee evaluation period or at each award fee determination point.

(4) For fixed-price-incentive contracts, the Government may--

(i) Reduce the contract target price and contract target profit both by an amount equal to the initial target profit specified in the contract at the time of contract award; or

(ii) If an immediate adjustment to the contract target price and contract target profit would have a significant adverse impact on the incentive price revision relationship under the contract, or adversely affect the contract financing provisions, the Contracting Officer may defer such adjustment until establishment of the total final price of the contract. The total final price established in accordance with the incentive price revision provisions of the contract shall be reduced by an amount equal to the initial target profit specified in the contract at the time of contract award and such reduced price shall be the total final contract price.

(5) For firm-fixed-price contracts, by 10 percent of the initial contract price or a profit amount determined by the Contracting Officer from records or documents in existence prior to the date of the contract award.

(c) The Government may, at its election, reduce a prime contractor's price or fee in accordance with the procedures of paragraph (b) of this clause for violations of the Act by its subcontractors by an amount not to exceed the amount of profit or fee reflected in the subcontract at the time the subcontract was first definitively priced.

(d) In addition to the remedies in paragraphs (a) and (c) of this clause, the Government may terminate this contract for default. The rights and remedies of the Government specified herein are not exclusive, and are in addition to any other rights and remedies provided by law or under this contract.

(End of clause)

52.203-12 LIMITATION ON PAYMENTS TO INFLUENCE CERTAIN FEDERAL TRANSACTIONS (JUN 1997)

(a) Definitions.

"Agency," as used in this clause, means executive agency as defined in 2.101.

"Covered Federal action," as used in this clause, means any of the following Federal actions:

(1) The awarding of any Federal contract.

(2) The making of any Federal grant.

(3) The making of any Federal loan.

(4) The entering into of any cooperative agreement.

(5) The extension, continuation, renewal, amendment, or modification of any Federal contract, grant, loan, or cooperative agreement.

"Indian tribe" and "tribal organization," as used in this clause, have the meaning provided in section 4 of the Indian Self-Determination and Education Assistance Act (25 U.S.C. 450B) and include Alaskan Natives.

"Influencing or attempting to influence," as used in this clause, means making, with the intent to influence, any communication to or appearance before an officer or employee of any agency, a Member of Congress, an officer or employee of Congress, or an employee of a Member of Congress in connection with any covered Federal action.

"Local government," as used in this clause, means a unit of government in a State and, if chartered, established, or otherwise recognized by a State for the performance of a governmental duty, including a local public authority, a special district, an intrastate district, a council of governments, a sponsor group representative organization, and any other instrumentality of a local government.

"Officer or employee of an agency," as used in this clause, includes the following individuals who are employed by an agency:

(1) An individual who is appointed to a position in the Government under Title 5, United States Code, including a position under a temporary appointment.

(2) A member of the uniformed services, as defined in subsection 101(3),Title 37, United States Code.

(3) A special Government employee, as defined in section 202, Title 18, United States Code.

(4) An individual who is a member of a Federal advisory committee, as defined by the Federal Advisory Committee Act, Title 5, United States Code, appendix 2.

"Person," as used in this clause, means an individual, corporation, company, association, authority, firm, partnership, society, State, and local government, regardless of whether such entity is operated for profit, or not for profit. This term excludes an Indian tribe, tribal organization, or any other Indian organization with respect to expenditures specifically permitted by other Federal law.

"Reasonable compensation," as used in this clause, means, with respect to a regularly employed officer or employee of any person, compensation that is consistent with the normal compensation for such officer or employee for work that is not furnished to, not funded by, or not furnished in cooperation with the Federal Government.

"Reasonable payment," as used in this clause, means, with respect to professional and other technical services, a payment in an amount that is consistent with the amount normally paid for such services in the private sector.

"Recipient," as used in this clause, includes the Contractor and all subcontractors. This term excludes an Indian tribe, tribal organization, or any other Indian organization with respect to expenditures specifically permitted by other Federal law.

"Regularly employed," as used in this clause, means, with respect to an officer or employee of a person requesting or receiving a Federal contract, an officer or employee who is employed by such person for at least 130 working days within 1 year immediately preceding the date of the submission that initiates agency consideration of such person for receipt of such contract. An officer or employee who is employed by such person for less than 130 working days within 1 year immediately preceding the date of the submission that initiates agency consideration of such person shall be considered to be regularly employed as soon as he or she is employed by such person for 130 working days.

"State," as used in this clause, means a State of the United States, the District of Columbia, the Commonwealth of Puerto Rico, a territory or possession of the United States, an agency or instrumentality of a State, and multi-State, regional, or interstate entity having governmental duties and powers.

(b) Prohibitions.

(1) Section 1352 of Title 31, United States Code, among other things, prohibits a recipient of a Federal contract, grant, loan, or cooperative agreement from using appropriated funds to pay any person for influencing or attempting to influence an officer or employee of any agency, a Member of Congress, an officer or employee of Congress, or an employee of a Member of Congress in connection with any of the following covered Federal actions: the awarding of any Federal contract; the making of any Federal grant; the making of any Federal loan; the entering into of any cooperative agreement; or the modification of any Federal contract, grant, loan, or cooperative agreement.

(2) The Act also requires Contractors to furnish a disclosure if any funds other than Federal appropriated funds (including profit or fee received under a covered Federal transaction) have been paid, or will be paid, to any person for influencing or attempting to influence an officer or employee of any agency, a Member of Congress, an officer or employee of Congress, or an employee of a Member of Congress in connection with a Federal contract, grant, loan, or cooperative agreement.

(3) The prohibitions of the Act do not apply under the following conditions:

(i) Agency and legislative liaison by own employees.

(A) The prohibition on the use of appropriated funds, in subparagraph (b)(1) of this clause, does not apply in the case of a payment of reasonable compensation made to an officer or employee of a person requesting or receiving a covered Federal action if the payment is for agency and legislative liaison activities not directly related to a covered Federal action.

(B) For purposes of subdivision (b)(3)(i)(A) of this clause, providing any information specifically requested by an agency or Congress is permitted at any time.

(C) The following agency and legislative liaison activities are permitted at any time where they are not related to a specific solicitation for any covered Federal action:

(1) Discussing with an agency the qualities and characteristics (including individual demonstrations) of the person's products or services, conditions or terms of sale, and service capabilities.

(2) Technical discussions and other activities regarding the application or adaptation of the person's products or services for an agency's use.

(D) The following agency and legislative liaison activities are permitted where they are prior to formal solicitation of any covered Federal action--

(1) Providing any information not specifically requested but necessary for an agency to make an informed decision about initiation of a covered Federal action;

(2) Technical discussions regarding the preparation of an unsolicited proposal prior to its official submission; and

(3) Capability presentations by persons seeking awards from an agency pursuant to the provisions of the Small Business Act, as amended by Pub. L. 95-507, and subsequent amendments.

(E) Only those services expressly authorized by subdivision (b)(3)(i)(A) of this clause are permitted under this clause.

(ii) Professional and technical services.

(A) The prohibition on the use of appropriated funds, in subparagraph (b)(1) of this clause, does not apply in the case of--

(1) A payment of reasonable compensation made to an officer or employee of a person requesting or receiving a covered Federal action or an extension, continuation, renewal, amendment, or modification of a covered Federal action, if payment is for professional or technical services rendered directly in the preparation, submission, or negotiation of any bid, proposal, or application for that Federal action or for meeting requirements imposed by or pursuant to law as a condition for receiving that Federal action.

(2) Any reasonable payment to a person, other than an officer or employee of a person requesting or receiving a covered Federal action or an extension, continuation, renewal, amendment, or modification of a covered Federal action if the payment is for professional or technical services rendered directly in the preparation, submission, or negotiation of any bid, proposal, or application for that Federal action or for meeting requirements imposed by or pursuant to law as a condition for receiving that Federal action. Persons other than officers or employees of a person requesting or receiving a covered Federal action include consultants and trade associations.

(B) For purposes of subdivision (b)(3)(ii)(A) of this clause, "professional and technical services" shall be limited to advice and analysis directly applying any professional or technical discipline. For example, drafting of a legal document accompanying a bid or proposal by a lawyer is allowable. Similarly, technical advice provided by an engineer on the performance or operational capability of a piece of equipment rendered directly in the negotiation of a contract is allowable. However, communications with the intent to influence made by a professional (such as a licensed lawyer) or a technical person (such as a licensed accountant) are not allowable under this section unless they provide advice and analysis directly applying their professional or technical expertise and unless the advice or analysis is rendered directly and solely in the preparation, submission or negotiation of a covered Federal action. Thus, for example, communications with the intent to influence made by a lawyer that do not provide legal advice or analysis directly and solely related to the legal aspects of his or her client's proposal, but generally advocate one proposal over another are not allowable under this section because the lawyer is not providing professional legal services. Similarly, communications with the intent to influence made by an engineer providing an engineering analysis prior to the preparation or submission of a bid or proposal are not allowable under this section since the engineer is providing technical services but not directly in the preparation, submission or negotiation of a covered Federal action.

(C) Requirements imposed by or pursuant to law as a condition for receiving a covered Federal award include those required by law or regulation and any other requirements in the actual award documents.

(D) Only those services expressly authorized by subdivisions (b)(3)(ii)(A)(1) and (2) of this clause are permitted under this clause.

(E) The reporting requirements of FAR 3.803(a) shall not apply with respect to payments of reasonable compensation made to regularly employed officers or employees of a person.

(c) Disclosure.

(1) The Contractor who requests or receives from an agency a Federal contract shall file with that agency a disclosure form, OMB standard form LLL, Disclosure of Lobbying Activities, if such person has made or has agreed to make any payment using nonappropriated funds (to include profits from any covered Federal action), which would be prohibited under subparagraph (b)(1) of this clause, if paid for with appropriated funds.

(2) The Contractor shall file a disclosure form at the end of each calendar quarter in which there occurs any event that materially affects the accuracy of the information contained in any disclosure form previously filed by such person under subparagraph (c)(1) of this clause. An event that materially affects the accuracy of the information reported includes--

(i) A cumulative increase of $25,000 or more in the amount paid or expected to be paid for influencing or attempting to influence a covered Federal action; or

(ii) A change in the person(s) or individual(s) influencing or attempting to influence a covered Federal action; or

(iii) A change in the officer(s), employee(s), or Member(s) contacted to influence or attempt to influence a covered Federal action.

(3) The Contractor shall require the submittal of a certification, and if required, a disclosure form by any person who requests or receives any subcontract exceeding $100,000 under the Federal contract.

(4) All subcontractor disclosure forms (but not certifications) shall be forwarded from tier to tier until received by the prime Contractor. The prime Contractor shall submit all disclosures to the Contracting Officer at the end of the calendar quarter in which the disclosure form is submitted by the subcontractor. Each subcontractor certification shall be retained in the subcontract file of the awarding Contractor.

(d) Agreement. The Contractor agrees not to make any payment prohibited by this clause.

(e) Penalties.

(1) Any person who makes an expenditure prohibited under paragraph (a) of this clause or who fails to file or amend the disclosure form to be filed or amended by paragraph (b) of this clause shall be subject to civil penalties as provided for by 31 U.S.C. 1352. An imposition of a civil penalty does not prevent the Government from seeking any other remedy that may be applicable.

(2) Contractors may rely without liability on the representation made by their subcontractors in the certification and disclosure form.

(f) Cost allowability. Nothing in this clause makes allowable or reasonable any costs which would otherwise be unallowable or unreasonable. Conversely, costs made specifically unallowable by the requirements in this clause will not be made allowable under any other provision.

(End of clause)

52.204-4 PRINTED OR COPIED DOUBLE-SIDED ON RECYCLED PAPER (AUG 2000)

(a) Definitions. As used in this clause--

“Postconsumer material” means a material or finished product that has served its intended use and has been discarded for disposal or recovery, having completed its life as a consumer item. Postconsumer material is a part of the broader category of “recovered material.” For paper and paper products, postconsumer material means “postconsumer fiber” defined by the U.S. Environmental Protection Agency (EPA) as--

(1) Paper, paperboard, and fibrous materials from retail stores, office buildings, homes, and so forth, after they have passed through their end-usage as a consumer item, including: used corrugated boxes; old newspapers; old magazines; mixed waste paper; tabulating cards; and used cordage; or

(2) All paper, paperboard, and fibrous materials that enter and are collected from municipal solid waste; but not

(3) Fiber derived from printers' over-runs, converters' scrap, and over-issue publications.

“Printed or copied double-sided” means printing or reproducing a document so that information is on both sides of a sheet of paper.

“Recovered material,” for paper and paper products, is defined by EPA in its Comprehensive Procurement Guideline as “recovered fiber” and means the following materials:

(1) Postconsumer fiber; and

(2) Manufacturing wastes such as--

(i) Dry paper and paperboard waste generated after completion of the papermaking process (that is, those manufacturing operations up to and including the cutting and trimming of the paper machine reel into smaller rolls or rough sheets) including: envelope cuttings, bindery trimmings, and other paper and paperboard waste resulting from printing, cutting, forming, and other converting operations; bag, box, and carton manufacturing wastes; and butt rolls, mill wrappers, and rejected unused stock; and

(ii) Repulped finished paper and paperboard from obsolete inventories of paper and paperboard manufacturers, merchants, wholesalers, dealers, printers, converters, or others.

(b) In accordance with Section 101 of Executive Order 13101 of September 14, 1998, Greening the Government through Waste Prevention, Recycling, and Federal Acquisition, the Contractor is encouraged to submit paper documents, such as offers, letters, or reports, that are printed or copied double-sided on recycled paper that meet minimum content standards specified in Section 505 of Executive Order 13101, when not using electronic commerce methods to submit information or data to the Government.

(c) If the Contractor cannot purchase high-speed copier paper, offset paper, forms bond, computer printout paper, carbonless paper, file folders, white wove envelopes, writing and office paper, book paper, cotton fiber paper, and cover stock meeting the 30 percent postconsumer material standard for use in submitting paper documents to the Government, it should use paper containing no less than 20 percent postconsumer material. This lesser standard should be used only when paper meeting the 30 percent postconsumer material standard is not obtainable at a reasonable price or does not meet reasonable performance standards.

(End of clause)

52.209-6 PROTECTING THE GOVERNMENT'S INTEREST WHEN SUBCONTRACTING WITH CONTRACTORS DEBARRED, SUSPENDED, OR PROPOSED FOR DEBARMENT (JUL 1995)

(a) The Government suspends or debars Contractors to protect the Government's interests. The Contractor shall not

enter into any subcontract in excess of the $25,000 with a Contractor that is debarred, suspended, or proposed for debarment unless there is a compelling reason to do so.

(b) The Contractor shall require each proposed first-tier subcontractor, whose subcontract will exceed $25,000, to disclose to the Contractor, in writing, whether as of the time of award of the subcontract, the subcontractor, or its principles, is or is not debarred, suspended, or proposed for debarment by the Federal Government.

(c) A corporate officer or a designee of the Contractor shall notify the Contracting Officer, in writing, before entering into a subcontract with a party that is debarred, suspended, or proposed for debarment (see FAR 9.404 for information on the List of Parties Excluded from Federal Procurement and Nonprocurement Programs). The notice must include the following:

(1) The name of the subcontractor.

(2) The Contractor's knowledge of the reasons for the subcontractor being on the List of Parties Excluded from Federal Procurement and Nonprocurement Programs.

(3) The compelling reason(s) for doing business with the subcontractor notwithstanding its inclusion on the List of Parties Excluded from Federal Procurement and Nonprocurement Programs.

(4) The systems and procedures the Contractor has established to ensure that it is fully protecting the Government's interests when dealing with such subcontractor in view of the specific basis for the party's debarment, suspension, or proposed debarment.

(End of clause)

52.211-15 DEFENSE PRIORITY AND ALLOCATION REQUIREMENTS (SEP 1990)

This is a rated order certified for national defense use, and the Contractor shall follow all the requirements of the Defense Priorities and Allocations System regulation (15 CFR 700).

(End of clause)

52.215-2 AUDIT AND RECORDS--NEGOTIATION (JUN 1999)

(a) As used in this clause, "records" includes books, documents, accounting procedures and practices, and other data, regardless of type and regardless of whether such items are in written form, in the form of computer data, or in any other form.

(b) Examination of costs. If this is a cost-reimbursement, incentive, time-and-materials, labor-hour, or price redeterminable contract, or any combination of these, the Contractor shall maintain and the Contracting Officer, or an authorized representative of the Contracting Officer, shall have the right to examine and audit all records and other evidence sufficient to reflect properly all costs claimed to have been incurred or anticipated to be incurred directly or indirectly in performance of this contract. This right of examination shall include inspection at all reasonable times of the Contractor's plants, or parts of them, engaged in performing the contract.

(c) Cost or pricing data. If the Contractor has been required to submit cost or pricing data in connection with any pricing action relating to this contract, the Contracting Officer, or an authorized representative of the Contracting Officer, in order to evaluate the accuracy, completeness, and currency of the cost or pricing data, shall have the right to examine and audit all of the Contractor's records, including computations and projections, related to--

(1) The proposal for the contract, subcontract, or modification;

(2) The discussions conducted on the proposal(s), including those related to negotiating;

(3) Pricing of the contract, subcontract, or modification; or

(4) Performance of the contract, subcontract or modification.

(d) Comptroller General--(1) The Comptroller General of the United States, or an authorized representative, shall have access to and the right to examine any of the Contractor's directly pertinent records involving transactions related to this contract or a subcontract hereunder.

(2) This paragraph may not be construed to require the Contractor or subcontractor to create or maintain any record that the Contractor or subcontractor does not maintain in the ordinary course of business or pursuant to a provision of law.

(e) Reports. If the Contractor is required to furnish cost, funding, or performance reports, the Contracting Officer or an authorized representative of the Contracting Officer shall have the right to examine and audit the supporting records and materials, for the purpose of evaluating (1) the effectiveness of the Contractor's policies and procedures to produce data compatible with the objectives of these reports and (2) the data reported.

(f) Availability. The Contractor shall make available at its office at all reasonable times the records, materials, and other evidence described in paragraphs (a), (b), (c), (d), and (e) of this clause, for examination, audit, or reproduction, until 3 years after final payment under this contract or for any shorter period specified in Subpart 4.7, Contractor Records Retention, of the Federal Acquisition Regulation (FAR), or for any longer period required by statute or by other clauses of this contract. In addition--

(1) If this contract is completely or partially terminated, the Contractor shall make available the records relating to the work terminated until 3 years after any resulting final termination settlement; and

(2) The Contractor shall make available records relating to appeals under the Disputes clause or to litigation or the settlement of claims arising under or relating to this contract until such appeals, litigation, or claims are finally resolved.

(g) The Contractor shall insert a clause containing all the terms of this clause, including this paragraph (g), in all subcontracts under this contract that exceed the simplified acquisition threshold, and--

(1) That are cost-reimbursement, incentive, time-and-materials, labor-hour, or price-redeterminable type or any combination of these;

(2) For which cost or pricing data are required; or

(3) That require the subcontractor to furnish reports as discussed in paragraph (e) of this clause.

The clause may be altered only as necessary to identify properly the contracting parties and the Contracting Officer under the Government prime contract.

(End of clause)

52.215-11 PRICE REDUCTION FOR DEFECTIVE COST OR PRICING DATA--MODIFICATIONS (OCT 1997)

(a) This clause shall become operative only for any modification to this contract involving a pricing adjustment expected to exceed the threshold for submission of cost or pricing data at FAR 15.403-4, except that this clause does not apply to any modification if an exception under FAR 15.403-1 applies.

(b) If any price, including profit or fee, negotiated in connection with any modification under this clause, or any cost reimbursable under this contract, was increased by any significant amount because (1) the Contractor or a subcontractor furnished cost or pricing data that were not complete, accurate, and current as certified in its Certificate of Current Cost or Pricing Data, (2) a subcontractor or prospective subcontractor furnished the Contractor cost or pricing data that were not complete, accurate, and current as certified in the Contractor's Certificate of Current Cost or Pricing Data, or (3) any of these parties furnished data of any description that were not accurate, the price or cost shall be reduced accordingly and the contract shall be modified to reflect the reduction. This right to a price reduction is limited to that resulting from defects in data relating to modifications for which this clause becomes operative under paragraph (a) of this clause.

(c) Any reduction in the contract price under paragraph (b) of this clause due to defective data from a prospective subcontractor that was not subsequently awarded the subcontract shall be limited to the amount, plus applicable overhead and profit markup, by which--

(1) The actual subcontract; or

(2) The actual cost to the Contractor, if there was no subcontract, was less than the prospective subcontract cost estimate submitted by the Contractor; provided, that the actual subcontract price was not itself affected by defective cost or pricing data.

(d)(1) If the Contracting Officer determines under paragraph (b) of this clause that a price or cost reduction should be made, the Contractor agrees not to raise the following matters as a defense:

(i) The Contractor or subcontractor was a sole source supplier or otherwise was in a superior bargaining position and thus the price of the contract would not have been modified even if accurate, complete, and current cost or pricing data had been submitted.

(ii) The Contracting Officer should have known that the cost or pricing data in issue were defective even though the Contractor or subcontractor took no affirmative action to bring the character of the data to the attention of the Contracting Officer.

(iii) The contract was based on an agreement about the total cost of the contract and there was no agreement about the cost of each item procured under the contract.

(iv) The Contractor or subcontractor did not submit a Certificate of Current Cost or Pricing Data.

(2)(i) Except as prohibited by subdivision (d)(2)(ii) of this clause, an offset in an amount determined appropriate by the Contracting Officer based upon the facts shall be allowed against the amount of a contract price reduction if--

(A) The Contractor certifies to the Contracting Officer that, to the best of the Contractor's knowledge and belief, the Contractor is entitled to the offset in the amount requested; and

(B) The Contractor proves that the cost or pricing data were available before the “as of” date specified on its Certificate of Current Cost or Pricing Data, and that the data were not submitted before such date.

(ii) An offset shall not be allowed if--

(A) The understated data were known by the Contractor to be understated before the “as of” date specified on its Certificate of Current Cost or Pricing Data; or

(B) The Government proves that the facts demonstrate that the contract price would not have increased in the amount to be offset even if the available data had been submitted before the “as of” date specified on its Certificate of Current Cost or Pricing Data.

(e) If any reduction in the contract price under this clause reduces the price of items for which payment was made prior to the date of the modification reflecting the price reduction, the Contractor shall be liable to and shall pay the United States at the time such overpayment is repaid--

(1) Simple interest on the amount of such overpayment to be computed from the date(s) of overpayment to the Contractor to the date the Government is repaid by the Contractor at the applicable underpayment rate effective for each quarter prescribed by the Secretary of the Treasury under 26 U.S.C. 6621(a)(2); and

A penalty equal to the amount of the overpayment, if the Contractor or subcontractor knowingly submitted cost or pricing data that were incomplete, inaccurate, or noncurrent.

(End of clause)

52.215-13 SUBCONTRACTOR COST OR PRICING DATA--MODIFICATIONS (OCT 1997)

(a) The requirements of paragraphs (b) and (c) of this clause shall--

(1) Become operative only for any modification to this contract involving a pricing adjustment expected to exceed the threshold for submission of cost or pricing data at FAR 15.403-4; and

(2) Be limited to such modifications.

(b) Before awarding any subcontract expected to exceed the threshold for submission of cost or pricing data at FAR 15.403-4, on the date of agreement on price or the date of award, whichever is later; or before pricing any subcontract modification involving a pricing adjustment expected to exceed the threshold for submission of cost or pricing data at FAR 15.403-4, the Contractor shall require the subcontractor to submit cost or pricing data (actually or by specific identification in writing), unless an exception under FAR 15.403-1 applies.

(c) The Contractor shall require the subcontractor to certify in substantially the form prescribed in FAR 15.406-2 that, to the best of its knowledge and belief, the data submitted under paragraph (b) of this clause were accurate, complete, and current as of the date of agreement on the negotiated price of the subcontract or subcontract modification.

The Contractor shall insert the substance of this clause, including this paragraph (d), in each subcontract that exceeds the threshold for submission of cost or pricing data at FAR 15.403-4 on the date of agreement on price or the date of award, whichever is later.

(End of clause)

52.215-21 REQUIREMENTS FOR COST OR PRICING DATA OR INFORMATION OTHER THAN COST OR PRICING DATA--MODIFICATIONS (OCT 1997)

(a) Exceptions from cost or pricing data. (1) In lieu of submitting cost or pricing data for modifications under this contract, for price adjustments expected to exceed the threshold set forth at FAR 15.403-4 on the date of the agreement on price or the date of the award, whichever is later, the Contractor may submit a written request for

exception by submitting the information described in the following subparagraphs. The Contracting Officer may require additional supporting information, but only to the extent necessary to determine whether an exception should be granted, and whether the price is fair and reasonable--

(i) Identification of the law or regulation establishing the price offered. If the price is controlled under law by periodic rulings, reviews, or similar actions of a governmental body, attach a copy of the controlling document, unless it was previously submitted to the contracting office.

(ii) Information on modifications of contracts or subcontracts for commercial items. (A) If--

(1) The original contract or subcontract was granted an exception from cost or pricing data requirements because the price agreed upon was based on adequate price competition or prices set by law or regulation, or was a contract or subcontract for the acquisition of a commercial item; and

(2) The modification (to the contract or subcontract) is not exempted based on one of these exceptions, then the Contractor may provide information to establish that the modification would not change the contract or subcontract from a contract or subcontract for the acquisition of a commercial item to a contract or subcontract for the acquisition of an item other than a commercial item.

(B) For a commercial item exception, the Contractor shall provide, at a minimum, information on prices at which the same item or similar items have previously been sold that is adequate for evaluating the reasonableness of the price of the modification. Such information may include--

(1) For catalog items, a copy of or identification of the catalog and its date, or the appropriate pages for the offered items, or a statement that the catalog is on file in the buying office to which the proposal is being submitted. Provide a copy or describe current discount policies and price lists (published or unpublished), e.g., wholesale, original equipment manufacturer, or reseller. Also explain the basis of each offered price and its relationship to the established catalog price, including how the proposed price relates to the price of recent sales in quantities similar to the proposed quantities.

(2) For market-priced items, the source and date or period of the market quotation or other basis for market price, the base amount, and applicable discounts. In addition, describe the nature of the market.

(3) For items included on an active Federal Supply Service Multiple Award Schedule contract, proof that an exception has been granted for the schedule item.

(2) The Contractor grants the Contracting Officer or an authorized representative the right to examine, at any time before award, books, records, documents, or other directly pertinent records to verify any request for an exception under this clause, and the reasonableness of price. For items priced using catalog or market prices, or law or regulation , access does not extend to cost or profit information or other data relevant solely to the Contractor's determination of the prices to be offered in the catalog or marketplace.

(b) Requirements for cost or pricing data. If the Contractor is not granted an exception from the requirement to submit cost or pricing data, the following applies:

(1) The Contractor shall submit cost or pricing data and supporting attachments in accordance with Table 15-2 of FAR 15.408.

As soon as practicable after agreement on price, but before award (except for unpriced actions), the Contractor shall submit a Certificate of Current Cost or Pricing Data, as prescribed by FAR 15.406-2.

(End of clause)

52.219-4 NOTICE OF PRICE EVALUATION PREFERENCE FOR HUBZONE SMALL BUSINESS CONCERNS (JAN 1999)

(a) Definition. HUBZone small business concern, as used in this clause, means a small business concern that appears on the List of Qualified HUBZone Small Business Concerns maintained by the Small Business Administration.

(b) Evaluation preference. (1) Offers will be evaluated by adding a factor of 10 percent to the price of all offers, except--

(i) Offers from HUBZone small business concerns that have not waived the evaluation preference;

(ii) Otherwise successful offers from small business concerns;

(iii) Otherwise successful offers of eligible products under the Trade Agreements Act when the dollar threshold for application of the Act is exceeded (see 25.402 of the Federal Acquisition Regulation (FAR)); and

(iv) Otherwise successful offers where application of the factor would be inconsistent with a Memorandum of Understanding or other international agreement with a foreign government.

(2) The factor of 10 percent shall be applied on a line item basis or to any group of items on which award may be made. Other evaluation factors described in the solicitation shall be applied before application of the factor.

(3) A concern that is both a HUBZone small business concern and a small disadvantaged business concern will receive the benefit of both the HUBZone small business price evaluation preference and the small disadvantaged business price evaluation adjustment (see FAR clause 52.219-23). Each applicable price evaluation preference or adjustment shall be calculated independently against an offeror's base offer.

These individual preference amounts shall be added together to arrive at the total evaluated price for that offer.

(c) Waiver of evaluation preference. A HUBZone small business concern may elect to waive the evaluation preference, in which case the factor will be added to its offer for evaluation purposes. The agreements in paragraph (d) of this clause do not apply if the offeror has waived the evaluation preference.

___ Offeror elects to waive the evaluation preference.

(d) Agreement. A HUBZone small business concern agrees that in the performance of the contract, in the case of a contract for

(1) Services (except construction), at least 50 percent of the cost of personnel for contract performance will be spent for employees of the concern or employees of other HUBZone small business concerns;

(2) Supplies (other than procurement from a nonmanufacturer of such supplies), at least 50 percent of the cost of manufacturing, excluding the cost of materials, will be performed by the concern or other HUBZone small business concerns;

(3) General construction, at least 15 percent of the cost of the contract performance incurred for personnel will be will be spent on the concern's employees or the employees of other HUBZone small business concerns; or

(4) Construction by special trade contractors, at least 25 percent of the cost of the contract performance incurred for personnel will be spent on the concern's employees or the employees of other HUBZone small business concerns.

(e) A HUBZone joint venture agrees that in the performance of the contract, the applicable percentage specified in paragraph (d) of this clause will be performed by the HUBZone small business participant or participants.

(f) A HUBZone small business concern nonmanufacturer agrees to furnish in performing this contract only end items manufactured or produced by HUBZone small business manufacturer concerns. This paragraph does not apply in connection with construction or service contracts.

(End of clause)

52.219-8 UTILIZATION OF SMALL BUSINESS CONCERNS (OCT 2000)

(a) It is the policy of the United States that small business concerns, veteran-owned small business concerns, service-disabled veteran-owned small business concerns, HUBZone small business concerns, small disadvantaged business concerns, and women-owned small business concerns shall have the maximum practicable opportunity to participate in performing contracts let by any Federal agency, including contracts and subcontracts for subsystems, assemblies, components, and related services for major systems. It is further the policy of the United States that its prime contractors establish procedures to ensure the timely payment of amounts due pursuant to the terms of their subcontracts with small business concerns, veteran-owned small business concerns, service-disabled veteran-owned small business concerns, HUBZone small business concerns, small disadvantaged business concerns, and women-owned small business concerns.

(b) The Contractor hereby agrees to carry out this policy in the awarding of subcontracts to the fullest extent consistent with efficient contract performance. The Contractor further agrees to cooperate in any studies or surveys as may be conducted by the United States Small Business Administration or the awarding agency of the United States as may be necessary to determine the extent of the Contractor's compliance with this clause.

Definitions. As used in this contract--

HUBZone small business concern means a small business concern that appears on the List of Qualified HUBZone Small Business Concerns maintained by the Small Business Administration.

Service-disabled veteran-owned small business concern--

(1) Means a small business concern--

(i) Not less than 51 percent of which is owned by one or more service-disabled veterans or, in the case of any publicly owned business, not less than 51 percent of the stock of which is owned by one or more service-disabled veterans; and

(ii) The management and daily business operations of which are controlled by one or more service-disabled veterans or, in the case of a veteran with permanent and severe disability, the spouse or permanent caregiver of such veteran.

(2) Service-disabled veteran means a veteran, as defined in 38 U.S.C. 101(2), with a disability that is service-connected, as defined in 38 U.S.C. 101(16).

Small business concern means a small business as defined pursuant to Section 3 of the Small Business Act and relevant regulations promulgated pursuant thereto.

Small disadvantaged business concern means a small business concern that represents, as part of its offer that--

(1) It has received certification as a small disadvantaged business concern consistent with 13 CFR part 124, subpart B;

(2) No material change in disadvantaged ownership and control has occurred since its certification;

(3) Where the concern is owned by one or more individuals, the net worth of each individual upon whom the certification is based does not exceed $750,000 after taking into account the applicable exclusions set forth at 13 CFR 124.104(c)(2); and

(4) It is identified, on the date of its representation, as a certified small disadvantaged business in the database maintained by the Small Business Administration (PRO-Net).

Veteran-owned small business concern means a small business concern--

(1) Not less than 51 percent of which is owned by one or more veterans (as defined at 38 U.S.C. 101(2)) or, in the case of any publicly owned business, not less than 51 percent of the stock of which is owned by one or more veterans; and

(2) The management and daily business operations of which are controlled by one or more veterans.

Women-owned small business concern means a small business concern--

(1) That is at least 51 percent owned by one or more women, or, in the case of any publicly owned business, at least 51 percent of the stock of which is owned by one or more women; and

(2) Whose management and daily business operations are controlled by one or more women.

(d) Contractors acting in good faith may rely on written representations by their subcontractors regarding their status as a small business concern, a veteran-owned small business concern, a service-disabled veteran-owned small business concern, a HUBZone small business concern, a small disadvantaged business concern, or a women-owned small business concern.

(End of clause)

52.219-9 SMALL BUSINESS SUBCONTRACTING PLAN (JAN 2002)

(a) This clause does not apply to small business concerns.

(b) Definitions. As used in this clause--

Commercial item means a product or service that satisfies the definition of commercial item in section 2.101 of the Federal Acquisition Regulation.

Commercial plan means a subcontracting plan (including goals) that covers the offeror's fiscal year and that applies to the entire production of commercial items sold by either the entire company or a portion thereof (e.g., division, plant, or product line).

Individual contract plan means a subcontracting plan that covers the entire contract period (including option periods), applies to a specific contract, and has goals that are based on the offeror's planned subcontracting in support of the specific contract, except that indirect costs incurred for common or joint purposes may be allocated on a prorated basis to the contract.

Master plan means a subcontracting plan that contains all the required elements of an individual contract plan, except goals, and may be incorporated into individual contract plans, provided the master plan has been approved.

Subcontract means any agreement (other than one involving an employer-employee relationship) entered into by a Federal Government prime Contractor or subcontractor calling for supplies or services required for performance of the contract or subcontract.

(c) The offeror, upon request by the Contracting Officer, shall submit and negotiate a subcontracting plan, where applicable, that separately addresses subcontracting with small business, veteran-owned small business, HUBZone small business concerns, small disadvantaged business, and women-owned small business concerns. If the offeror is submitting an individual contract plan, the plan must separately address subcontracting with small business, veteran-owned small business, HUBZone small business, small disadvantaged business, and women-owned small business concerns, with a separate part for the basic contract and separate parts for each option (if any). The plan shall be included in and made a part of the resultant contract. The subcontracting plan shall be negotiated within the time specified by the Contracting Officer. Failure to submit and negotiate the subcontracting plan shall make the offeror ineligible for award of a contract.

(d) The offeror's subcontracting plan shall include the following:

(1) Goals, expressed in terms of percentages of total planned subcontracting dollars, for the use of small business, veteran-owned small business, HUBZone small business, small disadvantaged business, and women-owned small business concerns as subcontractors. The offeror shall include all subcontracts that contribute to contract performance, and may include a proportionate share of products and services that are normally allocated as indirect costs.

(2) A statement of--

(i) Total dollars planned to be subcontracted for an individual contract plan; or the offeror's total projected sales, expressed in dollars, and the total value of projected subcontracts to support the sales for a commercial plan;

(ii) Total dollars planned to be subcontracted to small business concerns;

(iii) Total dollars planned to be subcontracted to veteran-owned small business concerns;

(iv) Total dollars planned to be subcontracted to HUBZone small business concerns;

(v) Total dollars planned to be subcontracted to small disadvantaged business concerns; and

(vi) Total dollars planned to be subcontracted to women-owned small business concerns.

(3) A description of the principal types of supplies and services to be subcontracted, and an identification of the types planned for subcontracting to--

(i) Small business concerns;

(ii) Veteran-owned small business concerns;

(iii) HUBZone small business concerns;

(iv) Small disadvantaged business concerns; and

(v) Women-owned small business concerns.

(4) A description of the method used to develop the subcontracting goals in paragraph (d)(1) of this clause.

(5) A description of the method used to identify potential sources for solicitation purposes (e.g., existing company source lists, the Procurement Marketing and Access Network (PRO-Net) of the Small Business Administration (SBA), veterans service organizations, the National Minority Purchasing Council Vendor Information Service, the Research and Information Division of the Minority Business Development Agency in the Department of Commerce, or small, HUBZone, small disadvantaged, and women-owned small business trade associations). A firm may rely on the information contained in PRO-Net as an accurate representation of a concern's size and ownership characteristics for the purposes of maintaining a small, veteran-owned small, HUBZone small, small disadvantaged, and women-owned small business source list. Use of PRO-Net as its source list does not relieve a firm of its responsibilities (e.g., outreach, assistance, counseling, or publicizing subcontracting opportunities) in this clause.

(6) A statement as to whether or not the offeror in included indirect costs in establishing subcontracting goals, and a description of the method used to determine the proportionate share of indirect costs to be incurred with—

(i) Small business concerns;

(ii) Veteran-owned small business concerns;

(iii) HUBZone small business concerns;

(iv) Small disadvantaged business concerns; and

(v) Women-owned small business concerns.

(7) The name of the individual employed by the offeror who will administer the offeror's subcontracting program, and a description of the duties of the individual.

(8) A description of the efforts the offeror will make to assure that small business, veteran-owned small business, HUBZone small business, small disadvantaged business and women-owned small business concerns have an equitable opportunity to compete for subcontracts.

(9) Assurances that the offeror will include the clause of this contract entitled ``Utilization of Small Business Concerns'' in all subcontracts that offer further subcontracting opportunities, and that the offeror will require all subcontractors (except small business concerns) that receive subcontracts in excess of $500,000 ($1,000,000 for construction of any public facility) to adopt a subcontracting plan that complies with the requirements of this clause.

(10) Assurances that the offeror will--

(i) Cooperate in any studies or surveys as may be required;

(ii) Submit periodic reports so that the Government can determine the extent of compliance by the offeror with the subcontracting plan;

(iii) Submit Standard Form (SF) 294, Subcontracting Report for Individual Contracts, and/or SF 295, Summary Subcontract Report, in accordance with paragraph (j) of this clause. The reports shall provide information on subcontract awards to small business concerns, veteran-owned small business concerns, service-disabled veteran-owned small business concerns, small disadvantaged business concerns, women-owned small business concerns, and Historically Black Colleges and Universities and Minority Institutions. Reporting shall be in accordance with the instructions on the forms or as provided in agency regulations.

(iv) Ensure that its subcontractors agree to submit SF 294 and SF 295.

(11) A description of the types of records that will be maintained concerning procedures that have been adopted to comply with the requirements and goals in the plan, including establishing source lists; and a description of the

offeror's efforts to locate small business, veteran-owned small business, HUBZone small business, small disadvantaged business, and women-owned small business concerns and award subcontracts to them. The records shall include at least the following (on a plant-wide or company-wide basis, unless otherwise indicated)

(i) Source lists (e.g., PRO-Net), guides, and other data that identify small business, veteran-owner small business, HUBZone small business, small disadvantaged business, and women-owned small business concerns.

(ii) Organizations contacted in an attempt to locate sources that are small business, veteran-owned small business, HUBZone small business, small disadvantaged business, or women-owned small business concerns.

(iii) Records on each subcontract solicitation resulting in an award of more than $100,000, indicating--

(A) Whether small business concerns were solicited and, if not, why not;

(B) Whether veteran-owned small business concerns were solicited and, if not, why not;

(C) Whether HUBZone small business concerns were solicited and, if not, why not;

(D) Whether small disadvantaged business concerns were solicited and, if not, why not;

(E) Whether women-owned small business concerns were solicited and, if not, why not; and

(F) If applicable, the reason award was not made to a small business concern.

(iv) Records of any outreach efforts to contact--

(A) Trade associations;

(B) Business development organizations;

(C) Conferences and trade fairs to locate small, HUBZone small, small disadvantaged, and women-owned small business sources; and

(D) Veterans service organizations.

(v) Records of internal guidance and encouragement provided to buyers through--

(A) Workshops, seminars, training, etc.; and

(B) Monitoring performance to evaluate compliance with the program's requirements.

(vi) On a contract-by-contract basis, records to support award data submitted by the offeror to the Government, including the name, address, and business size of each subcontractor. Contractors having commercial plans need not comply with this requirement.

(e) In order to effectively implement this plan to the extent consistent with efficient contract performance, the Contractor shall perform the following functions:

(1) Assist small business, veteran-owner small business, HUBZone small business, small disadvantaged business, and women-owned small business concerns by arranging solicitations, time for the preparation of bids, quantities, specifications, and delivery schedules so as to facilitate the participation by such concerns. Where the Contractor's lists of potential small business, veteran-owner small business, HUBZone small business, small disadvantaged

business, and women-owned small business subcontractors are excessively long, reasonable effort shall be made to give all such small business concerns an opportunity to compete over a period of time.

(2) Provide adequate and timely consideration of the potentialities of small business, veteran-owner small business, HUBZone small business, small disadvantaged business, and women-owned small business concerns in all ``make-or-buy'' decisions.

(3) Counsel and discuss subcontracting opportunities with representatives of small business, veteran-owner small business, HUBZone small business, small disadvantaged business, and women-owned small business firms.

(4) Provide notice to subcontractors concerning penalties and remedies for misrepresentations of business status as small, veteran-owner small business, HUBZone small, small disadvantaged, or women-owned small business for the purpose of obtaining a subcontract that is to be included as part or all of a goal contained in the Contractor's subcontracting plan.

(f) A master plan on a plant or division-wide basis that contains all the elements required by paragraph (d) of this clause, except goals, may be incorporated by reference as a part of the subcontracting plan required of the offeror by this clause; provided--
(1) the master plan has been approved, (2) the offeror ensures that the master plan is updated as necessary and provides copies of the approved master plan, including evidence of its approval, to the Contracting Officer, and (3) goals and any deviations from the master plan deemed necessary by the Contracting Officer to satisfy the requirements of this contract are set forth in the individual subcontracting plan.

(g) A commercial plan is the preferred type of subcontracting plan for contractors furnishing commercial items. The commercial plan shall relate to the offeror's planned subcontracting generally, for both commercial and Government business, rather than solely to the Government contract. Commercial plans are also preferred for subcontractors that provide commercial items under a prime contract, whether or not the prime contractor is supplying a commercial item.

(h) Prior compliance of the offeror with other such subcontracting plans under previous contracts will be considered by the Contracting Officer in determining the responsibility of the offeror for award of the contract.

(i) The failure of the Contractor or subcontractor to comply in good faith with (1) the clause of this contract entitled "Utilization Of Small Business Concerns," or (2) an approved plan required by this clause, shall be a material breach of the contract.

(j) The Contractor shall submit the following reports:

(1) Standard Form 294, Subcontracting Report for Individual Contracts. This report shall be submitted to the Contracting Officer semiannually and at contract completion. The report covers subcontract award data related to this contract. This report is not required for commercial plans.

(2) Standard Form 295, Summary Subcontract Report. This report encompasses all of the contracts with the awarding agency. It must be submitted semi-annually for contracts with the Department of Defense and annually for contracts with civilian agencies. If the reporting activity is covered by a commercial plan, the reporting activity must report annually all subcontract awards under that plan. All reports submitted at the close of each fiscal year (both individual and commercial plans) shall include a breakout, in the Contractor's format, of subcontract awards, in whole dollars, to small disadvantaged business concerns by North American Industry Classification System (NAICS) Industry Subsector. For a commercial plan, the Contractor may obtain from each of its subcontractors a predominant NAICS Industry Subsector and report all awards to that subcontractor under its predominant NAICS Industry Subsector.

(End of clause)

52.219-16 LIQUIDATED DAMAGES-SUBCONTRACTING PLAN (JAN 1999)

(a) Failure to make a good faith effort to comply with the subcontracting plan, as used in this clause, means a willful or intentional failure to perform in accordance with the requirements of the subcontracting plan approved under the clause in this contract entitled "Small Business Subcontracting Plan," or willful or intentional action to frustrate the plan.

(b) Performance shall be measured by applying the percentage goals to the total actual subcontracting dollars or, if a commercial plan is involved, to the pro rata share of actual subcontracting dollars attributable to Government contracts covered by the commercial plan. If, at contract completion or, in the case of a commercial plan, at the close of the fiscal year for which the plan is applicable, the Contractor has failed to meet its subcontracting goals and the Contracting Officer decides in accordance with paragraph (c) of this clause that the Contractor failed to make a good faith effort to comply with its subcontracting plan, established in accordance with the clause in this contract entitled “Small Business Subcontracting Plan,” the Contractor shall pay the Government liquidated damages in an amount stated. The amount of probable damages attributable to the Contractor's failure to comply shall be an amount equal to the actual dollar amount by which the Contractor failed to achieve each subcontract goal.

(c) Before the Contracting Officer makes a final decision that the Contractor has failed to make such good faith effort, the Contracting Officer shall give the Contractor written notice specifying the failure and permitting the Contractor to demonstrate what good faith efforts have been made and to discuss the matter. Failure to respond to the notice may be taken as an admission that no valid explanation exists. If, after consideration of all the pertinent data, the Contracting Officer finds that the Contractor failed to make a good faith effort to comply with the subcontracting plan, the Contracting Officer shall issue a final decision to that effect and require that the Contractor pay the Government liquidated damages as provided in paragraph (b) of this clause.

(d) With respect to commercial plans, the Contracting Officer who approved the plan will perform the functions of the Contracting Officer under this clause on behalf of all agencies with contracts covered by the commercial plan.

(e) The Contractor shall have the right of appeal, under the clause in this contract entitled Disputes, from any final decision of the Contracting Officer.

(f) Liquidated damages shall be in addition to any other remedies that the Government may have.

(End of clause)

52.222-3 CONVICT LABOR (AUG 1996)

The Contractor agrees not to employ in the performance of this contract any person undergoing a sentence of imprisonment which has been imposed by any court of a State, the District of Columbia, the Commonwealth of Puerto Rico, the Virgin Islands, Guam, American Samoa, the Commonwealth of the Northern Mariana Islands, or the Trust Territory of the Pacific Islands. This limitation, however, shall not prohibit the employment by the Contractor in the performance of this contract of persons on parole or probation to work at paid employment during the term of their sentence or persons who have been pardoned or who have served their terms. Nor shall it prohibit the employment by the Contractor in the performance of this contract of persons confined for violation of the laws of any of the States, the District of Columbia, the Commonwealth of Puerto Rico, the Virgin Islands, Guam, American Samoa, the Commonwealth of the Northern Mariana Islands, or the Trust Territory of the Pacific Islands who are authorized to work at paid employment in the community under the laws of such jurisdiction, if--

(a)(1) The worker is paid or is in an approved work training program on a voluntary basis;

(2) Representatives of local union central bodies or similar labor union organizations have been consulted;

(3) Such paid employment will not result in the displacement of employed workers, or be applied in skills, crafts, or trades in which there is a surplus of available gainful labor in the locality, or impair existing contracts for services; and

(4) The rates of pay and other conditions of employment will not be less than those paid or provided for work of a similar nature in the locality in which the work is being performed; and

(b) The Attorney General of the United States has certified that the work-release laws or regulations of the jurisdiction involved are in conformity with the requirements of Executive Order 11755, as amended by Executive Orders 12608 and 12943.

(End of clause)

52.222-4 CONTRACT WORK HOURS AND SAFETY STANDARDS ACT - OVERTIME COMPENSATION. (SEP 2000)

(a) Overtime requirements. No Contractor or subcontractor employing laborers or mechanics (see Federal Acquisition Regulation 22.300) shall require or permit them to work over 40 hours in any workweek unless they are paid at least 1 and 1/2 times the basic rate of pay for each hour worked over 40 hours.

(b) Violation; liability for unpaid wages; liquidated damages. The responsible Contractor and subcontractor are liable for unpaid wages if they violate the terms in paragraph (a) of this clause. In addition, the Contractor and subcontractor are liable for liquidated damages payable to the Government. The Contracting Officer will assess liquidated damages at the rate of $10 per affected employee for each calendar day on which the employer required or permitted the employee to work in excess of the standard workweek of 40 hours without paying overtime wages required by the Contract Work Hours and Safety Standards Act.

(c) Withholding for unpaid wages and liquidated damages. The Contracting Officer will withhold from payments due under the contract sufficient funds required to satisfy any Contractor or subcontractor liabilities for unpaid wages and liquidated damages. If amounts withheld under the contract are insufficient to satisfy Contractor or subcontractor liabilities, the Contracting Officer will withhold payments from other Federal or Federally assisted contracts held by the same Contractor that are subject to the Contract Work Hours and Safety Standards Act.

(d) Payrolls and basic records.

(1) The Contractor and its subcontractors shall maintain payrolls and basic payroll records for all laborers and mechanics working on the contract during the contract and shall make them available to the Government until 3 years after contract completion. The records shall contain the name and address of each employee, social security number, labor classifications, hourly rates of wages paid, daily and weekly number of hours worked, deductions made, and actual wages paid. The records need not duplicate those required for construction work by Department of Labor regulations at 29 CFR 5.5(a)(3) implementing the Davis-Bacon Act.

(2) The Contractor and its subcontractors shall allow authorized representatives of the Contracting Officer or the Department of Labor to inspect, copy, or transcribe records maintained under paragraph (d)(1) of this clause. The Contractor or subcontractor also shall allow authorized representatives of the Contracting Officer or Department of Labor to interview employees in the workplace during working hours.

(e) Subcontracts. The Contractor shall insert the provisions set forth in paragraphs (a) through (d) of this clause in subcontracts exceeding $100,000 and require subcontractors to include these provisions in any lower tier subcontracts. The Contractor shall be responsible for compliance by any subcontractor or lower-tier subcontractor with the provisions set forth in paragraphs (a) through (d) of this clause.

(End of clause)

52.222-6 DAVIS-BACON ACT (FEB 1995)

(a) All laborers and mechanics employed or working upon the site of the work will be paid unconditionally and not less often than once a week, and without subsequent deduction or rebate on any account (except such payroll deductions as are permitted by regulations issued by the Secretary of Labor under the Copeland Act (29 CFR Part 3), the full amount of wages and bona fide fringe benefits (or cash equivalents thereof) due at time of payment computed at rates not less than those contained in the wage determination of the Secretary of Labor which is attached hereto and made a part hereof, regardless of any contractual relationship which may be alleged to exist between the Contractor and such laborers and mechanics. Contributions made or costs reasonably anticipated for bona fide fringe benefits under section 1(b)(2) of the Davis-Bacon Act on behalf of laborers or mechanics are considered wages paid to such laborers or mechanics, subject to the provisions of paragraph (d) of this clause; also, regular contributions made or costs incurred for more than a weekly period (but not less often than quarterly) under plans, funds, or programs which cover the particular weekly period, are deemed to be constructively made or incurred during such period. Such laborers and mechanics shall be paid not less than the appropriate wage rate and fringe benefits in the wage determination for the classification of work actually performed, without regard to skill, except as provided in the clause entitled Apprentices and Trainees. Laborers or mechanics performing work in more than one classification may be compensated at the rate specified for each classification for the time actually worked therein; provided, That the employer's payroll records accurately set forth the time spent in each classification in which work is performed. The wage determination (including any additional classifications and wage rates conformed under paragraph (b) of this clause) and the Davis-Bacon poster (WH-1321) shall be posted at all times by the Contractor and its subcontractors at the site of the work in a prominent and accessible place where it can be easily seen by the workers.

(b)(1) The Contracting Officer shall require that any class of laborers or mechanics which is not listed in the wage determination and which is to be employed under the contract shall be classified in conformance with the wage determination. The Contracting Officer shall approve an additional classification and wage rate and fringe benefits therefor only when all the following criteria have been met:

(i) The work to be performed by the classification requested is not performed by a classification in the wage determination.

(ii) The classification is utilized in the area by the construction industry.

(iii) The proposed wage rate, including any bona fide fringe benefits, bears a reasonable relationship to the wage rates contained in the wage determination.

(2) If the Contractor and the laborers and mechanics to be employed in the classification (if known), or their representatives, and the Contracting Officer agree on the classification and wage rate (including the amount designated for fringe benefits, where appropriate), a report of the action taken shall be sent by the Contracting Officer to the Administrator of the Wage and Hour Division, Employment Standards Administration, U.S. Department of Labor, Washington, DC 20210. The Administrator or an authorized representative will approve, modify, or disapprove every additional classification action within 30 days of receipt and so advise the Contracting Officer or will notify the Contracting Officer within the 30-day period that additional time is necessary.

(3) In the event the Contractor, the laborers or mechanics to be employed in the classification, or their representatives, and the Contracting Officer do not agree on the proposed classification and wage rate (including the amount designated for fringe benefits, where appropriate), the Contracting Officer shall refer the questions, including the views of all interested parties and the recommendation of the Contracting Officer, to the Administrator of the

Wage and Hour Division for determination. The Administrator, or an authorized representative, will issue a determination within 30 days of receipt and so advise the Contracting Officer or will notify the Contracting Officer within the 30-day period that additional time is necessary.

(4) The wage rate (including fringe benefits, where appropriate) determined pursuant to subparagraphs (b)(2) and (b)(3) of this clause shall be paid to all workers performing work in the classification under this contract from the first day on which work is performed in the classification.

(c) Whenever the minimum wage rate prescribed in the contract for a class of laborers or mechanics includes a fringe benefit which is not expressed as an hourly rate, the Contractor shall either pay the benefit as stated in the wage determination or shall pay another bona fide fringe benefit or an hourly cash equivalent thereof.

(viii) If the Contractor does not make payments to a trustee or other third person, the Contractor may consider as part of the wages of any laborer or mechanic the amount of any costs reasonably anticipated in providing bona fide fringe benefits under a plan or program; provided, That the Secretary of Labor has found, upon the written request of the Contractor, that the applicable standards of the Davis-Bacon Act have been met. The Secretary of Labor may require the Contractor to set aside in a separate account assets for the meeting of obligations under the plan or program.

(End of clause)

52.222-7 WITHHOLDING OF FUNDS (FEB 1988)

The Contracting Officer shall, upon his or her own action or upon written request of an authorized representative of the Department of Labor, withhold or cause to be withheld from the Contractor under this contract or any other Federal contract with the same Prime Contractor, or any other Federally assisted contract subject to Davis-Bacon prevailing wage requirements, which is held by the same Prime Contractor, so much of the accrued payments or advances as may be considered necessary to pay laborers and mechanics, including apprentices, trainees, and helpers, employed by the Contractor or any subcontractor the full amount of wages required by the contract. In the event of failure to pay any laborer or mechanic, including any apprentice, trainee, or helper, employed or working on the site of the work, all or part of the wages required by the contract, the Contracting Officer may, after written notice to the Contractor, take such action as may be necessary to cause the suspension of any further payment, advance, or guarantee of funds until such violations have ceased.

(End of clause)

52.222-8 PAYROLLS AND BASIC RECORDS (FEB 1988)

(a) Payrolls and basic records relating thereto shall be maintained by the Contractor during the course of the work and preserved for a period of 3 years thereafter for all laborers and mechanics working at the site of the work. Such records shall contain the name, address, and social security number of each such worker, his or her correct classification, hourly rates of wages paid (including rates of contributions or costs anticipated for bona fide fringe benefits or cash equivalents thereof of the types described in section 1(b)(2)(B) of the Davis-Bacon Act), daily and weekly number of hours worked, deductions made, and actual wages paid. Whenever the Secretary of Labor has found, under paragraph (d) of the clause entitled Davis-Bacon Act, that the wages of any laborer or mechanic include the amount of any costs reasonably anticipated in providing benefits under a plan or program described in section 1(b)(2)(B) of the Davis-Bacon Act, the Contractor shall maintain records which show that the commitment to provide such benefits is enforceable, that the plan or program is financially responsible, and that the plan or program has been communicated in writing to the laborers or mechanics affected, and records which show the costs anticipated or the actual cost incurred in providing such benefits. Contractors employing apprentices or trainees under approved

programs shall maintain written evidence of the registration of apprenticeship programs and certification of trainee programs, the registration of the apprentices and trainees, and the ratios and wage rates prescribed in the applicable programs.

(b)(1) The Contractor shall submit weekly for each week in which any contract work is performed a copy of all payrolls to the Contracting Officer. The payrolls submitted shall set out accurately and completely all of the information required to be maintained under paragraph (a) of this clause. This information may be submitted in any form desired. Optional Form WH-347 (Federal Stock Number 029-005-00014-1) is available for this purpose and may be purchased from the Superintendent of Documents, U.S. Government Printing Office, Washington, DC 20402. The Prime Contractor is responsible for the submission of copies of payrolls by all subcontractors.

(2) Each payroll submitted shall be accompanied by a "Statement of Compliance," signed by the Contractor or subcontractor or his or her agent who pays or supervises the payment of the persons employed under the contract and shall certify--

(i) That the payroll for the payroll period contains the information required to be maintained under paragraph (a) of this clause and that such information is correct and complete;

(ii) That each laborer or mechanic (including each helper, apprentice, and trainee) employed on the contract during the payroll period has been paid the full weekly wages earned, without rebate, either directly or indirectly, and that no deductions have been made either directly or indirectly from the full wages earned, other than permissible deductions as set forth in the Regulations, 29 CFR Part 3; and

(iii) That each laborer or mechanic has been paid not less than the applicable wage rates and fringe benefits or cash equivalents for the classification of work performed, as specified in the applicable wage determination incorporated into the contract.

(3) The weekly submission of a properly executed certification set forth on the reverse side of Optional Form WH-347 shall satisfy the requirement for submission of the "Statement of Compliance" required by subparagraph (b)(2) of this clause.

(4) The falsification of any of the certifications in this clause may subject the Contractor or subcontractor to civil or criminal prosecution under Section 1001 of Title 18 and Section 3729 of Title 31 of the United States Code.

(c) The Contractor or subcontractor shall make the records required under paragraph (a) of this clause available for inspection, copying, or transcription by the Contracting Officer or authorized representatives of the Contracting Officer or the Department of Labor. The Contractor or subcontractor shall permit the Contracting Officer or representatives of the Contracting Officer or the Department of Labor to interview employees during working hours on the job. If the Contractor or subcontractor fails to submit required records or to make them available, the Contracting Officer may, after written notice to the Contractor, take such action as may be necessary to cause the suspension of any further payment. Furthermore, failure to submit the required records upon request or to make such records available may be grounds for debarment action pursuant to 29 CFR 5.12.

(End of clause)

52.222-9 APPRENTICES AND TRAINEES (FEB 1988)

(a) Apprentices. Apprentices will be permitted to work at less than the predetermined rate for the work they performed when they are employed pursuant to and individually registered in a bona fide apprenticeship program registered with the U.S. Department of Labor, Employment and Training Administration, Bureau of Apprenticeship and Training, or with a State Apprenticeship Agency recognized by the Bureau, or if a person is employed in his or

her first 90 days of probationary employment as an apprentice in such an apprenticeship program, who is not individually registered in the program, but who has been certified by the Bureau of Apprenticeship and Training or a State Apprenticeship Agency (where appropriate) to be eligible for probationary employment as an apprentice. The allowable ratio of apprentices to journeymen on the job site in any craft classification shall not be greater than the ratio permitted to the Contractor as to the entire work force under the registered program. Any worker listed on a payroll at an apprentice wage rate, who is not registered or otherwise employed as stated in this paragraph, shall be paid not less than the applicable wage determination for the classification of work actually performed. In addition, any apprentice performing work on the job site in excess of the ratio permitted under the registered program shall be paid not less than the applicable wage rate on the wage determination for the work actually performed. Where a contractor is performing construction on a project in a locality other than that in which its program is registered, the ratios and wage rates (expressed in percentages of the journeyman's hourly rate) specified in the Contractor's or subcontractor's registered program shall be observed. Every apprentice must be paid at not less than the rate specified in the registered program for the apprentice's level of progress, expressed as a percentage of the journeyman hourly rate specified in the applicable wage determination. Apprentices shall be paid fringe benefits in accordance with the provisions of the apprenticeship program. If the apprenticeship program does not specify fringe benefits, apprentices must be paid the full amount of fringe benefits listed on the wage determination for the applicable classification. If the Administrator determines that a different practice prevails for the applicable apprentice classification, fringes shall be paid in accordance with that determination. In the event the Bureau of Apprenticeship and Training, or a State Apprenticeship Agency recognized by the Bureau, withdraws approval of an apprenticeship program, the Contractor will no longer be permitted to utilize apprentices at less than the applicable predetermined rate for the work performed until an acceptable program is approved.

(b) Trainees. Except as provided in 29 CFR 5.16, trainees will not be permitted to work at less than the predetermined rate for the work performed unless they are employed pursuant to and individually registered in a program which has received prior approval, evidenced by formal certification by the U.S. Department of Labor, Employment and Training Administration. The ratio of trainees to journeymen on the job site shall not be greater than permitted under the plan approved by the Employment and Training Administration. Every trainee must be paid at not less than the rate specified in the approved program for the trainee's level of progress, expressed as a percentage of the journeyman hourly rate specified in the applicable wage determination. Trainees shall be paid fringe benefits in accordance with the provisions of the trainee program. If the trainee program does not mention fringe benefits, trainees shall be paid the full amount of fringe benefits listed in the wage determination unless the Administrator of the Wage and Hour Division determines that there is an apprenticeship program associated with the corresponding journeyman wage rate in the wage determination which provides for less than full fringe benefits for apprentices. Any employee listed on the payroll at a trainee rate who is not registered and participating in a training plan approved by the Employment and Training Administration shall be paid not less than the applicable wage rate in the wage determination for the classification of work actually performed. In addition, any trainee performing work on the job site in excess of the ratio permitted under the registered program shall be paid not less than the applicable wage rate in the wage determination for the work actually performed. In the event the Employment and Training Administration withdraws approval of a training program, the Contractor will no longer be permitted to utilize trainees at less than the applicable predetermined rate for the work performed until an acceptable program is approved.

(c) Equal employment opportunity. The utilization of apprentices, trainees, and journeymen under this clause shall be in conformity with the equal employment opportunity requirements of Executive Order 11246, as amended, and 29 CFR Part 30.

(End of clause)

52.222-10 COMPLIANCE WITH COPELAND ACT REQUIREMENTS (FEB 1988)

The Contractor shall comply with the requirements of 29 CFR Part 3, which are hereby incorporated by reference in this contract.

(End of clause)

52.222-11 SUBCONTRACTS (LABOR STANDARDS (FEB 1988)

(a) The Contractor or subcontractor shall insert in any subcontracts the clauses entitled Davis -Bacon Act, Contract Work Hours and Safety Standards Act-Overtime Compensation, Apprentices and Trainees, Payrolls and Basic Records, Compliance with Copeland Act Requirements, Withholding of Funds, Subcontracts (Labor Standards), Contract Termination-Debarment, Disputes Concerning Labor Standards, Compliance with Davis -Bacon and Related Act Regulations, and Certification of Eligibility, and such other clauses as the Contracting Officer may, by appropriate instructions, require, and also a clause requiring subcontractors to include these clauses in any lower tier subcontracts. The Prime Contractor shall be responsible for compliance by any subcontractor or lower tier subcontractor with all the contract clauses cited in this paragraph.

(b)(1) Within 14 days after award of the contract, the Contractor shall deliver to the Contracting Officer a completed Statement and Acknowledgment Form (SF 1413) for each subcontract, including the subcontractor's signed and dated acknowledgment that the clauses set forth in paragraph (a) of this clause have been included in the subcontract.

(iii) Within 14 days after the award of any subsequently awarded subcontract the Contractor shall deliver to the Contracting Officer an updated completed SF 1413 for such additional subcontract.

(End of clause)

52.222-12 CONTRACT TERMINATION--DEBARMENT (FEB 1988)

A breach of the contract clauses entitled Davis -Bacon Act, Contract Work Hours and Safety Standards Act--Overtime Compensation, Apprentices and Trainees, Payrolls and Basic Records, Compliance with Copeland Act Requirements, Subcontracts (Labor Standards), Compliance with Davis -Bacon and Related Act Regulations, or Certification of Eligibility may be grounds for termination of the contract, and for debarment as a Contractor and subcontractor as provided in 29 CFR 5.12.

(End of clause)

52.222-13 COMPLIANCE WITH DAVIS-BACON AND RELATED ACT REGULATIONS (FEB 1988)

All rulings and interpretations of the Davis -Bacon and Related Acts contained in 29 CFR Parts 1, 3, and 5 are hereby incorporated by reference in this contract.

(End of clause)

52.222-14 DISPUTES CONCERNING LABOR STANDARDS (FEB 1988)

The United States Department of Labor has set forth in 29 CFR Parts 5, 6, and 7 procedures for resolving disputes concerning labor standards requirements. Such disputes shall be resolved in accordance with those procedures and

not the Disputes clause of this contract. Disputes within the meaning of this clause include disputes between the Contractor (or any of its subcontractors) and the contracting agency, the U.S. Department of Labor, or the employees or their representatives.

(End of clause)

52.222-15 CERTIFICATION OF ELIGIBILITY (FEB 1988)

(a) By entering into this contract, the Contractor certifies that neither it (nor he or she) nor any person or firm who has an interest in the Contractor's firm is a person or firm ineligible to be awarded Government contracts by virtue of section 3(a) of the Davis-Bacon Act or 29 CFR 5.12(a)(1).

(b) No part of this contract shall be subcontracted to any person or firm ineligible for award of a Government contract by virtue of section 3(a) of the Davis-Bacon Act or 29 CFR 5.12(a)(1).

(ix) The penalty for making false statements is prescribed in the U.S. Criminal Code, 18 U.S.C. 1001.

(End of clause)

52.222-21 PROHIBITION OF SEGREGATED FACILITIES (FEB 1999)

(a) Segregated facilities, as used in this clause, means any waiting rooms, work areas, rest rooms and wash rooms, restaurants and other eating areas, time clocks, locker rooms and other storage or dressing areas, parking lots, drinking fountains, recreation or entertainment areas, transportation, and housing facilities provided for employees, that are segregated by explicit directive or are in fact segregated on the basis of race, color, religion, sex, or national origin because of written or oral policies or employee custom. The term does not include separate or single-user rest rooms or necessary dressing or sleeping areas provided to assure privacy between the sexes.

(b) The Contractor agrees that it does not and will not maintain or provide for its employees any segregated facilities at any of its establishments, and that it does not and will not permit its employees to perform their services at any location under its control where segregated facilities are maintained. The Contractor agrees that a breach of this clause is a violation of the Equal Opportunity clause in this contract.

(c) The Contractor shall include this clause in every subcontract and purchase order that is subject to the Equal Opportunity clause of this contract.

(End of clause)

52.222-26 EQUAL OPPORTUNITY (APR 2002)

(a) Definition. United States, as used in this clause, means the 50 States, the District of Columbia, Puerto Rico, the Northern Mariana Islands, American Samoa, Guam, the U.S. Virgin Islands, and Wake Island.

(b) If, during any 12-month period (including the 12 months preceding the award of this contract), the Contractor has been or is awarded nonexempt Federal contracts and/or subcontracts that have an aggregate value in excess of $10,000, the Contractor shall comply with paragraphs (b)(1) through (b)(11) of this clause, except for work performed

outside the United States by employees who were not recruited within the United States. Upon request, the Contractor shall provide information necessary to determine the applicability of this clause.

(1) The Contractor shall not discriminate against any employee or applicant for employment because of race, color, religion, sex, or national origin. However, it shall not be a violation of this clause for the Contractor to extend a publicly announced preference in employment to Indians living on or near an Indian reservation, in connection with employment opportunities on or near an Indian reservation, as permitted by 41 CFR 60-1.5.

(2) The Contractor shall take affirmative action to ensure that applicants are employed, and that employees are treated during employment, without regard to their race, color, religion, sex, or national origin. This shall include, but not be limited to, (i) employment, (ii) upgrading, (iii) demotion, (iv) transfer, (v) recruitment or recruitment advertising, (vi) layoff or termination, (vii) rates of pay or other forms of compensation, and (viii) selection for training, including apprenticeship.

(3) The Contractor shall post in conspicuous places available to employees and applicants for employment the notices to be provided by the Contracting Officer that explain this clause.

(4) The Contractor shall, in all solicitations or advertisements for employees placed by or on behalf of the Contractor, state that all qualified applicants will receive consideration for employment without regard to race, color, religion, sex, or national origin.

(5) The Contractor shall send, to each labor union or representative of workers with which it has a collective bargaining agreement or other contract or understanding, the notice to be provided by the Contracting Officer advising the labor union or workers' representative of the Contractor's commitments under this clause, and post copies of the notice in conspicuous places available to employees and applicants for employment.

(6) The Contractor shall comply with Executive Order 11246, as amended, and the rules, regulations, and orders of the Secretary of Labor.

(7) The Contractor shall furnish to the contracting agency all information required by Executive Order 11246, as amended, and by the rules, regulations, and orders of the Secretary of Labor. The Contractor shall also file Standard Form 100 (EEO-1), or any successor form, as prescribed in 41 CFR part 60-1. Unless the Contractor has filed within the 12 months preceding the date of contract award, the Contractor shall, within 30 days after contract award, apply to either the regional Office of Federal Contract Compliance Programs (OFCCP) or the local office of the Equal Employment Opportunity Commission for the necessary forms.

(8) The Contractor shall permit access to its premises, during normal business hours, by the contracting agency or the OFCCP for the purpose of conducting on-site compliance evaluations and complaint investigations. The Contractor shall permit the Government to inspect and copy any books, accounts, records (including computerized records), and other material that may be relevant to the matter under investigation and pertinent to compliance with Executive Order 11246, as amended, and rules and regulations that implement the Executive Order.

(9) If the OFCCP determines that the Contractor is not in compliance with this clause or any rule, regulation, or order of the Secretary of Labor, this contract may be canceled, terminated, or suspended in whole or in part and the Contractor may be declared ineligible for further Government contracts, under the procedures authorized in Executive Order 11246, as amended. In addition, sanctions may be imposed and remedies invoked against the Contractor as provided in Executive Order 11246, as amended; in the rules, regulations, and orders of the Secretary of Labor; or as otherwise provided by law.

(10) The Contractor shall include the terms and conditions of subparagraphs (b)(1) through (11) of this clause in every subcontract or purchase order that is not exempted by the rules, regulations, or orders of the Secretary of Labor issued under Executive Order 11246, as amended, so that these terms and conditions will be binding upon each subcontractor or vendor.

(11) The Contractor shall take such action with respect to any subcontract or purchase order as the contracting officer may direct as a means of enforcing these terms and conditions, including sanctions for noncompliance; provided, that if the Contractor becomes involved in, or is threatened with, litigation with a subcontractor or vendor as a result of any direction, the Contractor may request the United States to enter into the litigation to protect the interests of the United States.

(c) Notwithstanding any other clause in this contract, disputes relative to this clause will be governed by the procedures in 41 CFR 60-1.1.

(End of clause)

52.222-27 AFFIRMATIVE ACTION COMPLIANCE REQUIREMENTS FOR CONSTRUCTION (FEB 1999)

(a) Definitions. "Covered area," as used in this clause, means the geographical area described in the solicitation for this contract.

"Deputy Assistant Secretary," as used in this clause, means Deputy Assistant Secretary for Federal Contract Compliance, U.S. Department of Labor, or a designee.

"Employer's identification number," as used in this clause, means the Federal Social Security number used on the employer's quarterly federal tax return, U.S. Treasury Department Form 941.

"Minority," as used in this clause, means--

(1) American Indian or Alaskan Native (all persons having origins in any of the original peoples of North America and maintaining identifiable tribal affiliations through membership and participation or community identification).

(2) Asian and Pacific Islander (all persons having origins in any of the original peoples of the Far East, Southeast Asia, the Indian Subcontinent, or the Pacific Islands);

(3) Black (all persons having origins in any of the black African racial groups not of Hispanic origin); and

(4) Hispanic (all persons of Mexican, Puerto Rican, Cuban, Central or South American, or other Spanish culture or origin, regardless of race).

(b) If the Contractor, or a subcontractor at any tier, subcontracts a portion of the work involving any construction trade, each such subcontract in excess of $10,000 shall include this clause and the Notice containing the goals for minority and female participation stated in the solicitation for this contract.

(c) If the Contractor is participating in a Hometown Plan (41 CFR 60-4) approved by the U.S. Department of Labor in a covered area, either individually or through an association, its affirmative action obligations on all work in the plan area (including goals) shall comply with the plan for those trades that have unions participating in the plan. Contractors must be able to demonstrate participation in, and compliance with, the provisions of the plan. Each Contractor or subcontractor participating in an approved plan is also required to comply with its obligations under the Equal Opportunity clause, and to make a good faith effort to achieve each goal under the plan in each trade in which it has employees. The overall good-faith performance by other Contractors or subcontractors toward a goal in an approved plan does not excuse any Contractor's or subcontractor's failure to make good-faith efforts to achieve the plan's goals.

(d) The Contractor shall implement the affirmative action procedures in subparagraphs (g)(1) through (16) of this

clause. The goals stated in the solicitation for this contract are expressed as percentages of the total hours of employment and training of minority and female utilization that the Contractor should reasonably be able to achieve in each construction trade in which it has employees in the covered area. If the Contractor performs construction work in a geographical area located outside of the covered area, it shall apply the goals established for the geographical area where that work is actually performed. The Contractor is expected to make substantially uniform progress toward its goals in each craft.

(e) Neither the terms and conditions of any collective bargaining agreement, nor the failure by a union with which the Contractor has a collective bargaining agreement, to refer minorities or women shall excuse the Contractor's obligations under this clause, Executive Order 11246, as amended, or the regulations thereunder.

(f) In order for the nonworking training hours of apprentices and trainees to be counted in meeting the goals, apprentices and trainees must be employed by the Contractor during the training period, and the Contractor must have made a commitment to employ the apprentices and trainees at the completion of their training, subject to the availability of employment opportunities. Trainees must be trained pursuant to training programs approved by the U.S. Department of Labor.

(g) The Contractor shall take affirmative action to ensure equal employment opportunity. The evaluation of the Contractor's compliance with this clause shall be based upon its effort to achieve maximum results from its actions. The Contractor shall document these efforts fully and implement affirmative action steps at least as extensive as the following:

(1) Ensure a working environment free of harassment, intimidation, and coercion at all sites and in all facilities where the Contractor's employees are assigned to work. The Contractor, if possible, will assign two or more women to each construction project. The Contractor shall ensure that foremen, superintendents, and other onsite supervisory personnel are aware of and carry out the Contractor's obligation to maintain such a working environment, with specific attention to minority or female individuals working at these sites or facilities.

(2) Establish and maintain a current list of sources for minority and female recruitment. Provide written notification to minority and female recruitment sources and community organizations when the Contractor or its unions have employment opportunities available, and maintain a record of the organizations' responses.

(3) Establish and maintain a current file of the names, addresses, and telephone numbers of each minority and female off-the-street applicant, referrals of minorities or females from unions, recruitment sources, or community organizations, and the action taken with respect to each individual. If an individual was sent to the union hiring hall for referral and not referred back to the Contractor by the union or, if referred back, not employed by the Contractor, this shall be documented in the file, along with whatever additional actions the Contractor may have taken.

(4) Immediately notify the Deputy Assistant Secretary when the union or unions with which the Contractor has a collective bargaining agreement has not referred back to the Contractor a minority or woman sent by the Contractor, or when the Contractor has other information that the union referral process has impeded the Contractor's efforts to meet its obligations.

(5) Develop on-the-job training opportunities and/or participate in training programs for the area that expressly include minorities and women, including upgrading programs and apprenticeship and trainee programs relevant to the Contractor's employment needs, especially those programs funded or approved by the Department of Labor. The Contractor shall provide notice of these programs to the sources compiled under subparagraph (g)(2) of this clause.

(6) Disseminate the Contractor's equal employment policy by--

(i) Providing notice of the policy to unions and to training, recruitment, and outreach programs, and requesting their cooperation in assisting the Contractor in meeting its contract obligations;

(ii) Including the policy in any policy manual and in collective bargaining agreements;

(iii) Publicizing the policy in the company newspaper, annual report, etc.;

(iv) Reviewing the policy with all management personnel and with all minority and female employees at least once a year; and

(v) Posting the policy on bulletin boards accessible to employees at each location where construction work is performed.

(7) Review, at least annually, the Contractor's equal employment policy and affirmative action obligations with all employees having responsibility for hiring, assignment, layoff, termination, or other employment decisions. Conduct review of this policy with all on-site supervisory personnel before initiating construction work at a job site. A written record shall be made and maintained identifying the time and place of these meetings, persons attending, subject matter discussed, and disposition of the subject matter.

(8) Disseminate the Contractor's equal employment policy externally by including it in any advertising in the news media, specifically including minority and female news media. Provide written notification to, and discuss this policy with, other Contractors and subcontractors with which the Contractor does or anticipates doing business.

(9) Direct recruitment efforts, both oral and written, to minority, female, and community organizations, to schools with minority and female students, and to minority and female recruitment and training organizations serving the Contractor's recruitment area and employment needs. Not later than 1 month before the date for acceptance of applications for apprenticeship or training by any recruitment source, send written notification to organizations such as the above, describing the openings, screening procedures, and tests to be used in the selection process.

(10) Encourage present minority and female employees to recruit minority persons and women. Where reasonable, provide after-school, summer, and vacation employment to minority and female youth both on the site and in other areas of the Contractor's workforce.

(11) Validate all tests and other selection requirements where required under 41 CFR 60-3.

(12) Conduct, at least annually, an inventory and evaluation at least of all minority and female personnel for promotional opportunities. Encourage these employees to seek or to prepare for, through appropriate training, etc., opportunities for promotion.

(13) Ensure that seniority practices, job classifications, work assignments, and other personnel practices do not have a discriminatory effect by continually monitoring all personnel and employment-related activities to ensure that the Contractor's obligations under this contract are being carried out.

(14) Ensure that all facilities and company activities are nonsegregated except that separate or single-user rest rooms and necessary dressing or sleeping areas shall be provided to assure privacy between the sexes.

(15) Maintain a record of solicitations for subcontracts for minority and female construction contractors and suppliers, including circulation of solicitations to minority and female contractor associations and other business associations.

(16) Conduct a review, at least annually, of all supervisors' adherence to and performance under the Contractor's equal employment policy and affirmative action obligations.

(h) The Contractor is encouraged to participate in voluntary associations that may assist in fulfilling one or more of the affirmative action obligations contained in subparagraphs (g)(1) through (16) of this clause. The efforts of a

contractor association, joint contractor-union, contractor-community, or similar group of which the contractor is a member and participant may be asserted as fulfilling one or more of its obligations under subparagraphs (g)(1) through (16) of this clause, provided the Contractor--

(1) Actively participates in the group;

(2) Makes every effort to ensure that the group has a positive impact on the employment of minorities and women in the industry;

(3) Ensures that concrete benefits of the program are reflected in the Contractor's minority and female workforce participation;

(4) Makes a good-faith effort to meet its individual goals and timetables; and

(5) Can provide access to documentation that demonstrates the effectiveness of actions taken on behalf of the Contractor. The obligation to comply is the Contractor's, and failure of such a group to fulfill an obligation shall not be a defense for the Contractor's noncompliance.

(i) A single goal for minorities and a separate single goal for women shall be established. The Contractor is required to provide equal employment opportunity and to take affirmative action for all minority groups, both male and female, and all women, both minority and nonminority. Consequently, the Contractor may be in violation of Executive Order 11246, as amended, if a particular group is employed in a substantially disparate manner.

(j) The Contractor shall not use goals or affirmative action standards to discriminate against any person because of race, color, religion, sex, or national origin.

(k) The Contractor shall not enter into any subcontract with any person or firm debarred from Government contracts under Executive Order 11246, as amended.

(l) The Contractor shall carry out such sanctions and penalties for violation of this clause and of the Equal Opportunity clause, including suspension, termination, and cancellation of existing subcontracts, as may be imposed or ordered under Executive Order 11246, as amended, and its implementing regulations, by the OFCCP. Any failure to carry out these sanctions and penalties as ordered shall be a violation of this clause and Executive Order 11246, as amended.

(m) The Contractor in fulfilling its obligations under this clause shall implement affirmative action procedures at least as extensive as those prescribed in paragraph (g) of this clause, so as to achieve maximum results from its efforts to ensure equal employment opportunity. If the Contractor fails to comply with the requirements of Executive Order 11246, as amended, the implementing regulations, or this clause, the Deputy Assistant Secretary shall take action as prescribed in 41 CFR 60-4.8.

(n) The Contractor shall designate a responsible official to--

(1) Monitor all employment-related activity to ensure that the Contractor's equal employment policy is being carried out;

(2) Submit reports as may be required by the Government; and

(3) Keep records that shall at least include for each employee the name, address, telephone number, construction trade, union affiliation (if any), employee identification number, social security number, race, sex, status (e.g., mechanic, apprentice, trainee, helper, or laborer), dates of changes in status, hours worked per week in the indicated trade, rate of pay, and locations at which the work was performed. Records shall be maintained in an easily understandable and retrievable form; however, to the degree that existing records satisfy this requirement, separate

records are not required to be maintained.

Nothing contained herein shall be construed as a limitation upon the application of other laws that establish different standards of compliance or upon the requirements for the hiring of local or other area residents (e.g., those under the Public Works Employment Act of 1977 and the Community Development Block Grant Program).

(End of clause)

52.222-35 EQUAL OPPORTUNITY FOR SPECIAL DISABLED VETERANS, VETERANS OF THE VIETNAM ERA, AND OTHER ELIGIBLE VETERANS (DEC 2001)

(a) Definitions. As used in this clause--

All employment openings means all positions except executive and top management, those positions that will be filled from within the Contractor's organization, and positions lasting 3 days or less. This term includes full-time employment, temporary employment of more than 3 days duration, and part-time employment.

Executive and top management means any employee--

(1) Whose primary duty consists of the management of the enterprise in which the individual is employed or of a customarily recognized department or subdivision thereof;

(2) Who customarily and regularly directs the work of two or more other employees;

(3) Who has the authority to hire or fire other employees or whose suggestions and recommendations as to the hiring or firing and as to the advancement and promotion or any other change of status of other employees will be given particular weight;

(4) Who customarily and regularly exercises discretionary powers; and

(5) Who does not devote more than 20 percent or, in the case of an employee of a retail or service establishment, who does not devote more than 40 percent of total hours of work in the work week to activities that are not directly and closely related to the performance of the work described in paragraphs (1) through (4) of this definition. This paragraph (5) does not apply in the case of an employee who is in sole charge of an establishment or a physically separated branch establishment, or who owns at least a 20 percent interest in the enterprise in which the individual is employed.

Other eligible veteran means any other veteran who served on active duty during a war or in a campaign or expedition for which a campaign badge has been authorized.

Positions that will be filled from within the Contractor's organization means employment openings for which the Contractor will give no consideration to persons outside the Contractor's organization (including any affiliates, subsidiaries, and parent companies) and includes any openings the Contractor proposes to fill from regularly established “recall” lists. The exception does not apply to a particular opening once an employer decides to consider applicants outside of its organization.

Qualified special disabled veteran means a special disabled veteran who satisfies the requisite skill, experience, education, and other job-related requirements of the employment position such veteran holds or desires, and who, with or without reasonable accommodation, can perform the essential functions of such position.

Special disabled veteran means--

(1) A veteran who is entitled to compensation (or who but for the receipt of military retired pay would be entitled to compensation) under laws administered by the Department of Veterans Affairs for a disability--

(i) Rated at 30 percent or more; or

(ii) Rated at 10 or 20 percent in the case of a veteran who has been determined under 38 U.S.C. 3106 to have a serious employment handicap (i.e., a significant impairment of the veteran's ability to prepare for, obtain, or retain employment consistent with the veteran's abilities, aptitudes, and interests); or

(2) A person who was discharged or released from active duty because of a service-connected disability.

Veteran of the Vietnam era means a person who--

(1) Served on active duty for a period of more than 180 days and was discharged or released from active duty with other than a dishonorable discharge, if any part of such active duty occurred--

(i) In the Republic of Vietnam between February 28, 1961, and May 7, 1975; or

(ii) Between August 5, 1964, and May 7, 1975, in all other cases; or

(2) Was discharged or released from active duty for a service-connected disability if any part of the active duty was performed--

(i) In the Republic of Vietnam between February 28, 1961, and May 7, 1975; or

(ii) Between August 5, 1964, and May 7, 1975, in all other cases.
(b) General. (1) The Contractor shall not discriminate against the individual because the individual is a special disabled veteran, a veteran of the Vietnam era, or other eligible veteran, regarding any position for which the employee or applicant for employment is qualified. The Contractor shall take affirmative action to employ, advance in employment, and otherwise treat qualified special disabled veterans, veterans of the Vietnam era, and other eligible veterans without discrimination based upon their disability or veterans' status in all employment practices such as--

(i) Recruitment, advertising, and job application procedures;

(ii) Hiring, upgrading, promotion, award of tenure, demotion, transfer, layoff, termination, right of return from layoff and rehiring;

(iii) Rate of pay or any other form of compensation and changes in compensation;

(iv) Job assignments, job classifications, organizational structures, position descriptions, lines of progression, and seniority lists;

(v) Leaves of absence, sick leave, or any other leave;

(vi) Fringe benefits available by virtue of employment, whether or not administered by the Contractor;

(vii) Selection and financial support for training, including apprenticeship, and on-the-job training under 38 U.S.C. 3687, professional meetings, conferences, and other related activities, and selection for leaves of absence to pursue training;

(viii) Activities sponsored by the Contractor including social or recreational programs; and

(ix) Any other term, condition, or privilege of employment.

(2) The Contractor shall comply with the rules, regulations, and relevant orders of the Secretary of Labor issued under the Vietnam Era Veterans' Readjustment Assistance Act of 1972 (the Act), as amended (38 U.S.C. 4211 and 4212).

(c) Listing openings. (1) The Contractor shall immediately list all employment openings that exist at the time of the execution of this contract and those which occur during the performance of this contract, including those not generated by this contract, and including those occurring at an establishment of the Contractor other than the one where the contract is being performed, but excluding those of independently operated corporate affiliates, at an appropriate local public employment service office of the State wherein the opening occurs. Listing employment openings with the U.S. Department of Labor's America's Job Bank shall satisfy the requirement to list jobs with the local employment service office.

(2) The Contractor shall make the listing of employment openings with the local employment service office at least concurrently with using any other recruitment source or effort and shall involve the normal obligations of placing a bona fide job order, including accepting referrals of veterans and nonveterans. This listing of employment openings does not require hiring any particular job applicant or hiring from any particular group of job applicants and is not intended to relieve the Contractor from any requirements of Executive orders or regulations concerning nondiscrimination in employment.

(3) Whenever the Contractor becomes contractually bound to the listing terms of this clause, it shall advise the State public employment agency in each State where it has establishments of the name and location of each hiring location in the State. As long as the Contractor is contractually bound to these terms and has so advised the State agency, it need not advise the State agency of subsequent contracts. The Contractor may advise the State agency when it is no longer bound by this contract clause.

(d) Applicability. This clause does not apply to the listing of employment openings that occur and are filled outside the 50 States, the District of Columbia, the Commonwealth of Puerto Rico, the Commonwealth of the Northern Mariana Islands, American Samoa, Guam, the Virgin Islands of the United States, and Wake Island.

(e) Postings. (1) The Contractor shall post employment notices in conspicuous places that are available to employees and applicants for employment.

(2) The employment notices shall--

(i) State the rights of applicants and employees as well as the Contractor's obligation under the law to take affirmative action to employ and advance in employment qualified employees and applicants who are special disabled veterans, veterans of the Vietnam era, and other eligible veterans; and

(ii) Be in a form prescribed by the Deputy Assistant Secretary for Federal Contract Compliance Programs, Department of Labor (Deputy Assistant Secretary of Labor), and provided by or through the Contracting Officer.

(3) The Contractor shall ensure that applicants or employees who are special disabled veterans are informed of the contents of the notice (e.g., the Contractor may have the notice read to a visually disabled veteran, or may lower the posted notice so that it can be read by a person in a wheelchair).

(4) The Contractor shall notify each labor union or representative of workers with which it has a collective bargaining agreement, or other contract understanding, that the Contractor is bound by the terms of the Act and is committed to take affirmative action to employ, and advance in employment, qualified special disabled veterans, veterans of the Vietnam era, and other eligible veterans.

(f) Noncompliance. If the Contractor does not comply with the requirements of this clause, the Government may take appropriate actions under the rules, regulations, and relevant orders of the Secretary of Labor issued pursuant to the Act.

(g) Subcontracts. The Contractor shall insert the terms of this clause in all subcontracts or purchase orders of $25,000 or more unless exempted by rules, regulations, or orders of the Secretary of Labor. The Contractor shall act as specified by the Deputy Assistant Secretary of Labor to enforce the terms, including action for noncompliance.

(End of clause)

52.222-36 AFFIRMATIVE ACTION FOR WORKERS WITH DISABILITIES (JUN 1998)

(a) General. (1) Regarding any position for which the employee or applicant for employment is qualified, the Contractor shall not discriminate against any employee or applicant because of physical or mental disability. The Contractor agrees to take affirmative action to employ, advance in employment, and otherwise treat qualified individuals with disabilities without discrimination based upon their physical or mental disability in all employment practices such as--

(i) Recruitment, advertising, and job application procedures;

(ii) Hiring, upgrading, promotion, award of tenure, demotion, transfer, layoff, termination, right of return from layoff, and rehiring;

(iii) Rates of pay or any other form of compensation and changes in compensation;

(iv) Job assignments, job classifications, organizational structures, position descriptions, lines of progression, and seniority lists;

(v) Leaves of absence, sick leave, or any other leave;

(vi) Fringe benefits available by virtue of employment, whether or not administered by the Contractor;

(vii) Selection and financial support for training, including apprenticeships, professional meetings, conferences, and other related activities, and selection for leaves of absence to pursue training;

(viii) Activities sponsored by the Contractor, including social or recreational programs; and

(ix) Any other term, condition, or privilege of employment.

(2) The Contractor agrees to comply with the rules, regulations, and relevant orders of the Secretary of Labor (Secretary) issued under the Rehabilitation Act of 1973 (29 U.S.C. 793) (the Act), as amended.

(b) Postings. (1) The Contractor agrees to post employment notices stating--

(i) The Contractor's obligation under the law to take affirmative action to employ and advance in employment qualified individuals with disabilities; and

(ii) The rights of applicants and employees.

(2) These notices shall be posted in conspicuous places that are available to employees and applicants for employment. The Contractor shall ensure that applicants and employees with disabilities are informed of the contents

of the notice (e.g., the Contractor may have the notice read to a visually disabled individual, or may lower the posted notice so that it might be read by a person in a wheelchair). The notices shall be in a form prescribed by the Deputy Assistant Secretary for Federal Contract Compliance of the U.S. Department of Labor (Deputy Assistant Secretary) and shall be provided by or through the Contracting Officer.

(3) The Contractor shall notify each labor union or representative of workers with which it has a collective bargaining agreement or other contract understanding, that the Contractor is bound by the terms of Section 503 of the Act and is committed to take affirmative action to employ, and advance in employment, qualified individuals with physical or mental disabilities.

(c) Noncompliance. If the Contractor does not comply with the requirements of this clause, appropriate actions may be taken under the rules, regulations, and relevant orders of the Secretary issued pursuant to the Act.

(d) Subcontracts. The Contractor shall include the terms of this clause in every subcontract or purchase order in excess of $10,000 unless exempted by rules, regulations, or orders of the Secretary. The Contractor shall act as specified by the Deputy Assistant Secretary to enforce the terms, including action for noncompliance.

(End of clause)

52.222-37 EMPLOYMENT REPORTS ON SPECIAL DISABLED VETERANS, VETERANS OF THE VIETNAM ERA, AND OTHER ELIGIBLE VETERANS (DEC 2001)

(a) Unless the Contractor is a State or local government agency, the Contractor shall report at least annually, as required by the Secretary of Labor, on--

(1) The number of disabled veterans and the number of veterans of the Vietnam era in the workforce of the contractor by job category and hiring location; and

(2) The total number of new employees hired during the period covered by the report, and of that total, the number of disabled veterans, and the number of veterans of the Vietnam era.

(b) The above items shall be reported by completing the form entitled "Federal Contractor Veterans' Employment Report VETS-100."

(c) Reports shall be submitted no later than September 30 of each year beginning September 30, 1988.

(d) The employment activity report required by paragraph (a)(2) of this clause shall reflect total hires during the most recent 12-month period as of the ending date selected for the employment profile report required by paragraph (a)(1) of this clause. Contractors may select an ending date: (1) As of the end of any pay period during the period January through March 1st of the year the report is due, or (2) as of December 31, if the contractor has previous written approval from the Equal Employment Opportunity Commission to do so for purposes of submitting the Employer Information Report EEO-1 (Standard Form 100).

(e) The count of veterans reported according to paragraph (a) of this clause shall be based on voluntary disclosure. Each Contractor subject to the reporting requirements at 38 U.S.C. 4212 shall invite all disabled veterans and veterans of the Vietnam era who wish to benefit under the affirmative action program at 38 U.S.C. 4212 to identify themselves to the Contractor. The invitation shall state that the information is voluntarily provided; that the information will be kept confidential; that disclosure or refusal to provide the information will not subject the applicant or employee to any adverse treatment; and that the information will be used only in accordance with the regulations promulgated under 38 U.S.C. 4212.

(f) Subcontracts. The Contractor shall include the terms of this clause in every subcontract or purchase order of $10,000 or more unless exempted by rules, regulations, or orders of the Secretary.

(End of clause)

52.223-5 POLLUTION PREVENTION AND RIGHT-TO-KNOW INFORMATION (APR 1998)

(a) Executive Order 12856 of August 3, 1993, requires Federal facilities to comply with the provisions of the Emergency Planning and Community Right-to-Know Act of 1986 (EPCRA)(42 U.S.C. 11001-11050) and the Pollution Prevention Act of 1990 (PPA)(42 U.S.C. 13101-13109).

(b) The Contractor shall provide all information needed by the Federal facility to comply with the emergency planning reporting requirements of Section 302 of EPCRA; the emergency notice requirements of Section 304 of EPCRA; the list of Material Safety Data Sheets required by Section 311 of EPCRA; the emergency and hazardous chemical inventory forms of Section 312 of EPCRA; the toxic chemical release inventory of Section 313 of EPCRA, which includes the reduction and recycling information required by Section 6607 of PPA; and the toxic chemical reduction goals requirements of Section 3-302 of Executive Order 12856.

(End of clause)

52.223-6 DRUG-FREE WORKPLACE (MAY 2001)

(a) Definitions. As used in this clause --

"Controlled substance" means a controlled substance in schedules I through V of section 202 of the Controlled Substances Act (21 U.S.C. 812) and as further defined in regulation at 21 CFR 1308.11 - 1308.15.

"Conviction" means a finding of guilt (including a plea of nolo contendere) or imposition of sentence, or both, by any judicial body charged with the responsibility to deter- mine violations of the Federal or State criminal drug statutes.

"Criminal drug statute" means a Federal or non-Federal criminal statute involving the manufacture, distribution, dispensing, possession, or use of any controlled substance.

"Drug-free workplace" means the site(s) for the performance of work done by the Contractor in connection with a specific contract at which employees of the Contractor are prohibited from engaging in the unlawful manufacture, distribution, dispensing, possession, or use of a controlled substance.

"Employee" means an employee of a Contractor directly engaged in the performance of work under a Government contract. "Directly engaged" is defined to include all direct cost employees and any other Contractor employee who has other than a minimal impact or involvement in contract performance.

"Individual" means an offeror/contractor that has no more than one employee including the offeror/contractor.

(b) The Contractor, if other than an individual, shall-- within 30 days after award (unless a longer period is agreed to in writing for contracts of 30 days or more performance duration), or as soon as possible for contracts of less than 30 days performance duration--

(1) Publish a statement notifying its employees that the unlawful manufacture, distribution, dispensing, possession, or use of a controlled substance is prohibited in the Contractor's workplace and specifying the actions that will be

taken against employees for violations of such prohibition;

(2) Establish an ongoing drug-free awareness program to inform such employees about--

(i) The dangers of drug abuse in the workplace;

(ii) The Contractor's policy of maintaining a drug-free workplace;

(iii) Any available drug counseling, rehabilitation, and employee assistance programs ; and

(iv) The penalties that may be imposed upon employees for drug abuse violations occurring in the workplace;

(3) Provide all employees engaged in performance of the contract with a copy of the statement required by subparagraph (b)(1) of this clause;

(4) Notify such employees in writing in the statement required by subparagraph (b)(1) of this clause that, as a condition of continued employment on this contract, the employee will--

(i) Abide by the terms of the statement; and

(ii) Notify the employer in writing of the employee's conviction under a criminal drug statute for a violation occurring in the workplace no later than 5 days after such conviction.

(5) Notify the Contracting Officer in writing within 10 days after receiving notice under subdivision (b)(4)(ii) of this clause, from an employee or otherwise receiving actual notice of such conviction. The notice shall include the position title of the employee;

(6) Within 30 days after receiving notice under subdivision (b)(4)(ii) of this clause of a conviction, take one of the following actions with respect to any employee who is convicted of a drug abuse violation occurring in the workplace:

(i) Taking appropriate personnel action against such employee, up to and including termination; or

(ii) Require such employee to satisfactorily participate in a drug abuse assistance or rehabilitation program approved for such purposes by a Federal, State, or local health, law enforcement, or other appropriate agency; and

(7) Make a good faith effort to maintain a drug-free workplace through implementation of subparagraphs (b)(1) though (b)(6) of this clause.

(c) The Contractor, if an individual, agrees by award of the contract or acceptance of a purchase order, not to engage in the unlawful manufacture, distribution, dispensing, possession, or use of a controlled substance while performing this contract.

(d) In addition to other remedies available to the Government, the Contractor's failure to comply with the requirements of paragraph (b) or (c) of this clause may, pursuant to FAR 23.506, render the Contractor subject to suspension of contract payments, termination of the contract for default, and suspension or debarment.

(End of clause)

52.223-14 TOXIC CHEMICAL RELEASE REPORTING (OCT 2000)

(a) Unless otherwise exempt, the Contractor, as owner or operator of a facility used in the performance of this contract, shall file by July 1 for the prior calendar year an annual Toxic Chemical Release Inventory Form (Form R) as described in sections 313(a) and (g) of the Emergency Planning and Community Right-to-Know Act of 1986 (EPCRA) (42 U.S.C. 11023(a) and (g)), and section 6607 of the Pollution Prevention Act of 1990 (PPA) (42 U.S.C. 13106). The Contractor shall file, for each facility subject to the Form R filing and reporting requirements, the annual Form R throughout the life of the contract.

(b) A Contractor owned or operated facility used in the performance of this contract is exempt from the requirement to file an annual Form R if--

(1) The facility does not manufacture, process, or otherwise use any toxic chemicals listed under section 313(c) of EPCRA, 42 U.S.C. 11023(c);

(2) The facility does not have 10 or more full-time employees as specified in section 313(b)(1)(A) of EPCRA, 42 U.S.C. 11023(b)(1)(A);

(3) The facility does not meet the reporting thresholds of toxic chemicals established under of EPCRA, 42 U.S.C. 11023(f) (including the alternate thresholds at 40 CFR 372.27, provided an appropriate certification form has been filed with EPA);

(4) The facility does not fall within Standard Industrial Classification Code (SIC) major groups 20 through 39 or their corresponding North American Industry Classification System (NAICS) sectors 31 through 33; or

(5) The facility is not located within any State of the United States, the District of Columbia, the Commonwealth of Puerto Rico, Guam, American Samoa, the United States Virgin Islands, the Northern Mariana Islands, or any other territory or possession over which the United States has jurisdiction.

(c) If the Contractor has certified to an exemption in accordance with one or more of the criteria in paragraph (b) of this clause, and after award of the contract circumstances change so that any of its owned or operated facilities used in the performance of this contract is no longer exempt--

(1) The Contractor shall notify the Contracting Officer; and

(2) The Contractor, as owner or operator of a facility used in the performance of this contract that is no longer exempt, shall (i) submit a Toxic Chemical Release Inventory Form (Form R) on or before July 1 for the prior calendar year during which the facility becomes eligible; and (ii) continue to file the annual Form R for the life of the contract for such facility.

(d) The Contracting Officer may terminate this contract or take other action as appropriate, if the Contractor fails to comply accurately and fully with the EPCRA and PPA toxic chemical release filing and reporting requirements.

(e) Except for acquisitions of commercial items, as defined in FAR Part 2, the Contractor shall--

(1) For competitive subcontracts expected to exceed $100,000 (including all options), include a solicitation provision substantially the same as the provision at FAR 52.223-13, Certification of Toxic Chemical Release Reporting; and

(2) Include in any resultant subcontract exceeding $100,000 (including all options), the substance of this clause, except this paragraph (e).

(End of clause)

52.225-5 TRADE AGREEMENTS (NOV 2002)

(a) Definitions. As used in this clause.

Caribbean Basin country means any of the following countries: Antigua and Barbuda, Aruba, Bahamas, Barbados, Belize, British Virgin Islands, Costa Rica, Dominica, El Salvador, Grenada, Guatemala, Guyana, Haiti, Jamaica, Montserrat, Netherlands Antilles, Nicaragua, Panama, St. Kitts and Nevis, St. Lucia, St. Vincent and the Grenadines, Trinidad and Tobago.

Caribbean Basin country end product means an article that--

(1) Is wholly the growth, product, or manufacture of a Caribbean Basin country; or

(2) In the case of an article that consists in whole or in part of materials from another country, has been substantially transformed in a Caribbean Basin country into a new and different article of commerce with a name, character, or use distinct from that of the article or articles from which it was transformed. The term refers to a product offered for purchase under a supply contract, but for purposes of calculating the value of the end product includes services (except transportation services) incidental to the article, provided that the value of those incidental services does not exceed that of the article itself. The term excludes products that are excluded from duty-free treatment for Caribbean countries under 19 U.S.C. 2703(b), which presently are--

(i) Textiles and apparel articles that are subject to textile agreements;

(ii) Footwear, handbags, luggage, flat goods, work gloves, and leather wearing apparel not designated as eligible articles for the purpose of the Generalized System of Preferences under Title V of the Trade Act of 1974;

(iii) Tuna, prepared or preserved in any manner in airtight containers;

(iv) Petroleum, or any product derived from petroleum; and

(v) Watches and watch parts (including cases, bracelets, and straps) of whatever type including, but not limited to, mechanical, quartz digital, or quartz analog, if such watches or watch parts contain any material that is the product of any country to which the Harmonized Tariff Schedule of the United States (HTSUS) column 2 rates of duty apply.

Designated country means any of the following countries: Aruba, Austria, Bangladesh Belgium, Benin, Bhutan, Botswana, Burkina Faso, Burundi, Canada, Cape Verde, Central African Republic, Chad, Comoros, Denmark, Djibouti, Equatorial Guinea.

Finland, France, Gambia, Germany, Greece, Guinea, Guinea-Bissau, Haiti, Honduras, Hong Kong, Iceland, Ireland, Israel, Italy, Japan.

Kiribati, Korea, Republic of Lesotho, Liechtenstein, Luxembourg, Malawi, Maldives, Mali, Mozambique, Nepal, Netherlands, Niger, Norway, Portugal, Rwanda.

Sao Tome and Principe, Sierra Leone, Singapore, Somalia, Spain, Sweden, Switzerland, Tanzania U.R., Togo, Tuvalu, Uganda, United Kingdom, Vanuatu, Western Samoa, Yemen.

Designated country end product means an article that--

(1) Is wholly the growth, product, or manufacture of a designated country; or

(2) In the case of an article that consists in whole or in part of materials from another country, has been substantially transformed in a designated country into a new and different article of commerce with a name, character, or use

distinct from that of the article or articles from which it was transformed. The term refers to a product offered for purchase under a supply contract, but for purposes of calculating the value of the end product includes services, (except transportation services) incidental to the article, provided that the value of those incidental services does not exceed that of the article itself.

End product means supplies delivered under a line item of a Government contract.

North American Free Trade Agreement country means Canada or Mexico.

North American Free Trade Agreement country end product means an article that--

(1) Is wholly the growth, product, or manufacture of a North American Free Trade Agreement (NAFTA) country; or

(2) In the case of an article that consists in whole or in part of materials from another country, has been substantially transformed in a NAFTA country into a new and different article of commerce with a name, character, or use distinct from that of the article or articles from which it was transformed. The term refers to a product offered for purchase under a supply contract, but for purposes of calculating the value of the end product includes services, (except transportation services) incidental to the article, provided that the value of those incidental services does not exceed that of the article itself.

United States means the 50 States and the District of Columbia, U.S. territories and possessions, Puerto Rico, the Northern Mariana Islands, and any other place subject to U.S. jurisdiction, but does not include leased bases.

U.S.-made end product means an article that is mined, produced, or manufactured in the United States or that is substantially transformed in the United States into a new and different article of commerce with a name, character, or use distinct from that of the article or articles from which it was transformed.,

(b) Implementation. This clause implements the Trade, Agreements Act (19 U.S.C. 2501, et seq.) and the North American Free Trade Agreement Implementation Act of 1993, (NAFTA) (19 U.S.C. 3301 note), by restricting the acquisition of end products that are not U.S.-made, designated country, Caribbean Basin country, or NAFTA country end products.,

(c) Delivery of end products. The Contracting Officer has determined that the Trade Agreements Act and NAFTA apply to this acquisition. Unless otherwise specified, these trade agreements apply to all items in the Schedule. The Contractor shall deliver under this contract only U.S.-made, designated country, Caribbean Basin country, or NAFTA country end products except to the extent that, in its offer, it specified delivery of other end products in the provision entitled “Trade Agreements Certificate.”

(End of clause)

52.225-11 BUY AMERICAN ACT--CONSTRUCTION MATERIALS UNDER TRADE AGREEMENTS (JUL 2002)

(a) Definitions. As used in this clause--

Component means an article, material, or supply incorporated directly into a construction material.

Construction material means an article, material, or supply brought to the construction site by the Contractor or subcontractor for incorporation into the building or work. The term also includes an item brought to the site preassembled from articles, materials, or supplies. However, emergency life safety systems, such as emergency lighting, fire alarm, and audio evacuation systems, that are discrete systems incorporated into a public building or

work and that are produced as complete systems, are evaluated as a single and distinct construction material regardless of when or how the individual parts or components of those systems are delivered to the construction site. Materials purchased directly by the Government are supplies, not construction material.

Cost of components means--

(1) For components purchased by the Contractor, the acquisition cost, including transportation costs to the place of incorporation into the construction material (whether or not such costs are paid to a domestic firm), and any applicable duty (whether or not a duty-free entry certificate is issued); or

(2) For components manufactured by the Contractor, all costs associated with the manufacture of the component, including transportation costs as described in paragraph (1) of this definition, plus allocable overhead costs, but excluding profit. Cost of components does not include any costs associated with the manufacture of the end product.

Designated country means any of the following countries: Aruba, Austria, Bangladesh, Belgium, Benin, Bhutan, Botswana, Burkina Faso, Burundi, Canada, Cape Verde, Central African Republic, Chad, Comoros, Denmark.

Djibouti, Equatorial Guinea, Finland, France, Gambia, Germany, Greece, Guinea, Guinea-Bissau, Haiti, Hong Kong, Ireland, Israel, Italy, Japan.

Kiribati, Korea, Republic of, Lesotho, Liechtenstein, Luxembourg, Malawi, Maldives, Mali, Mozambique, Nepal, Netherlands, Niger, Norway, Portugal, Rwanda.

Sao Tome and Principe, Sierra Leone, Singapore, Somalia, Spain, Sweden, Switzerland, Tanzania U.R., Togo, Tuvalu, Uganda, United Kingdom, Vanuatu, Western Samoa, Yemen.

Designated country construction material means a construction material that--

(1) Is wholly the growth, product, or manufacture of a designated country; or

(2) In the case of a construction material that consists in whole or in part of materials from another country, has been substantially transformed in a designated country into a new and different construction material distinct from the materials from which it was transformed.

Domestic construction material means--

(1) An unmanufactured construction material mined or produced in the United States; or

(2) A construction material manufactured in the United States, if the cost of its components mined, produced, or manufactured in the United States exceeds 50 percent of the cost of all its components. Components of foreign origin of the same class or kind for which nonavailability determinations have been made are treated as domestic.

Foreign construction material means a construction material other than a domestic construction material.

North American Free Trade Agreement country means Canada or Mexico.

North American Free Trade Agreement country construction material means a construction material that--

(1) Is wholly the growth, product, or manufacture of a North American Free Trade Agreement (NAFTA) country; or

(2) In the case of a construction material that consists in whole or in part of materials from another country, has been substantially transformed in a NAFTA country into a new and different construction material distinct from the materials from which it was transformed.

United States means the 50 States and the District of Columbia, U.S. territories and possessions, Puerto Rico, the Northern Mariana Islands, and any other place subject to U.S. jurisdiction, but does not include leased bases.

(b) Construction materials. (1) This clause implements the Buy American Act (41 U.S.C. 10a-10d) and the Balance of Payments Program by providing a preference for domestic construction material. In addition, the Contracting Officer has determined that the Trade Agreements Act and the North American Free Trade Agreement (NAFTA) apply to this acquisition. Therefore, the Buy American Act restrictions are waived for designated country and NAFTA country construction materials.

(2) The Contractor shall use only domestic, designated country, or NAFTA country construction material in performing this contract, except as provided in paragraphs (b)(3) and (b)(4) of this clause.

(3) The requirement in paragraph (b)(2) of this clause does not apply to the construction materials or components listed by the Government as follows: (Contracting Officer to list applicable excepted materials or indicate “none”)

(4) The Contracting Officer may add other foreign construction material to the list in paragraph (b)(3) of this clause if the Government determines that--

(i) The cost of domestic construction material would be unreasonable. The cost of a particular domestic construction material subject to the restrictions of the Buy American Act is unreasonable when the cost of such material exceeds the cost of foreign material by more than 6 percent;

(ii) The application of the restriction of the Buy American Act to a particular construction material would be impracticable or inconsistent with the public interest; or

(iii) The construction material is not mined, produced, or manufactured in the United States in sufficient and reasonably available commercial quantities of a satisfactory quality.

(c) Request for determination of inapplicability of the Buy American Act.

(1)(i) Any Contractor request to use foreign construction material in accordance with paragraph (b)(4) of this clause shall include adequate information for Government evaluation of the request, including--

(A) A description of the foreign and domestic construction materials;

(B) Unit of measure;

(C) Quantity;

(D) Price;

(E) Time of delivery or availability;

(F) Location of the construction project;

(G) Name and address of the proposed supplier; and

(H) A detailed justification of the reason for use of foreign construction materials cited in accordance with paragraph (b)(3) of this clause.

(ii) A request based on unreasonable cost shall include a reasonable survey of the market and a completed price comparison table in the format in paragraph (d) of this clause.

(iii) The price of construction material shall include all delivery costs to the construction site and any applicable duty (whether or not a duty-free certificate may be issued).

(iv) Any Contractor request for a determination submitted after contract award shall explain why the Contractor could not reasonably foresee the need for such determination and could not have requested the determination before contract award. If the Contractor does not submit a satisfactory explanation, the Contracting Officer need not make a determination.

(2) If the Government determines after contract award that an exception to the Buy American Act applies and the Contracting Officer and the Contractor negotiate adequate consideration, the Contracting Officer will modify the contract to allow use of the foreign construction material. However, when the basis for the exception is the unreasonable price of a domestic construction material, adequate consideration is not less than the differential established in paragraph (b)(4)(i) of this clause.

(3) Unless the Government determines that an exception to the Buy American Act applies, use of foreign construction material is noncompliant with the Buy American Act.

(d) Data. To permit evaluation of requests under paragraph (c) of this clause based on unreasonable cost, the Contractor shall include the following information and any applicable supporting data based on the survey of suppliers:

Foreign and Domestic Construction Materials Price Comparison

Construction material description	Unit of measure	Quantity	Price (dollars) \1\
Item 1:			
Foreign construction material....	.....	.....	.....
Domestic construction material...	.....	.....	.....
Item 2:			
Foreign construction material....	.....	.....	.....
Domestic construction material...	.....	.....	.....

\1\ Include all delivery costs to the construction site and any applicable duty (whether or not a duty-free entry certificate is issued).

List name, address, telephone number, and contact for suppliers surveyed. Attach copy of response; if oral, attach summary.

Include other applicable supporting information.

(End of clause)

52.225-13 RESTRICTIONS ON CERTAIN FOREIGN PURCHASES (JUL 2000)

(a) The Contractor shall not acquire, for use in the performance of this contract, any supplies or services originating from sources within, or that were located in or transported from or through, countries whose products are banned from importation into the United States under regulations of the Office of Foreign Assets Control, Department of the Treasury. Those countries are Cuba, Iran, Iraq, Libya, North Korea, Sudan, the territory of Afghanistan controlled by the Taliban, and Serbia (excluding the territory of Kosovo).

(b) The Contractor shall not acquire for use in the performance of this contract any supplies or services from entities controlled by the government of Iraq.

(c) The Contractor shall insert this clause, including this paragraph (c), in all subcontracts.

(End of clause)

52.227-1 AUTHORIZATION AND CONSENT (JUL 1995)

(a) The Government authorizes and consents to all use and manufacture, in performing this contract or any subcontract at any tier, of any invention described in and covered by a United States patent (1) embodied in the structure or composition of any article the delivery of which is accepted by the Government under this contract or (2) used in machinery, tools, or methods whose use necessarily results from compliance by the Contractor or a subcontractor with (i) specifications or written provisions forming a part of this contract or (ii) specific written instructions given by the Contracting Officer directing the manner of performance. The entire liability to the Government for infringement of a patent of the United States shall be determined solely by the provisions of the indemnity clause, if any, included in this contract or any subcontract hereunder (including any lower-tier subcontract), and the Government assumes liability for all other infringement to the extent of the authorization and consent hereinabove granted.

(b) The Contractor agrees to include, and require inclusion of, this clause, suitably modified to identify the parties, in all subcontracts at any tier for supplies or services (including construction, architect-engineer services, and materials, supplies, models, samples, and design or testing services expected to exceed the simplified acquisition threshold (however, omission of this clause from any subcontract, including those at or below the simplified acquisition threshold, does not affect this authorization and consent.)

(End of clause)

52.227-2 NOTICE AND ASSISTANCE REGARDING PATENT AND COPYRIGHT INFRINGEMENT (AUG 1996)

(a) The Contractor shall report to the Contracting Officer, promptly and in reasonable written detail, each notice or claim of patent or copyright infringement based on the performance of this contract of which the Contractor has knowledge.

(b) In the event of any claim or suit against the Government on account of any alleged patent or copyright infringement arising out of the performance of this contract or out of the use of any supplies furnished or work or services performed under this contract, the Contractor shall furnish to the Government, when requested by the Contracting Officer, all evidence and information in possession of the Contractor pertaining to such suit or claim. Such evidence and information shall be furnished at the expense of the Government except where the Contractor has agreed to indemnify the Government.

(x) The Contractor agrees to include, and require inclusion of, this clause in all subcontracts at any tier for supplies or services (including construction and architect-engineer subcontracts and those for material, supplies, models, samples, or design or testing services) expected to exceed the simplified acquisition threshold at (FAR) 2.101.to exceed the dollar amount set forth in 13.000 of the Federal Acquisition Regulation (FAR).

(End of clause)

52.227-4 PATENT INDEMNITY--CONSTRUCTION CONTRACTS (APR 1984)

Except as otherwise provided, the Contractor agrees to indemnify the Government and its officers, agents, and employees against liability, including costs and expenses, for infringement upon any United States patent (except a patent issued upon an application that is now or may hereafter be withheld from issue pursuant to a Secrecy Order under 35 U.S.C. 181) arising out of performing this contract or out of the use or disposal by or for the account of the Government of supplies furnished or work performed under this contract.

(End of clause)

52.228-1 BID GUARANTEE (SEP 1996)

(a) Failure to furnish a bid guarantee in the proper form and amount, by the time set for opening of bids, may be cause for rejection of the bid.

(b) The bidder shall furnish a bid guarantee in the form of a firm commitment, e.g., bid bond supported by good and sufficient surety or sureties acceptable to the Government, postal money order, certified check, cashier's check, irrevocable letter of credit, or, under Treasury Department regulations, certain bonds or notes of the United States. The Contracting Officer will return bid guarantees, other than bid bonds, (1) to unsuccessful bidders as soon as practicable after the opening of bids, and (2) to the successful bidder upon execution of contractual documents and bonds (including any necessary coinsurance or reinsurance agreements), as required by the bid as accepted.-

(c) The amount of the bid guarantee shall be twenty (20) percent of the bid price or $3 Million, whichever is less.-

(d) If the successful bidder, upon acceptance of its bid by the Government within the period specified for acceptance, fails to execute all contractual documents or furnish executed bond(s) within 10 days after receipt of the forms by the bidder, the Contracting Officer may terminate the contract for default.-

(e) In the event the contract is terminated for default, the bidder is liable for any cost of acquiring the work that exceeds the amount of its bid, and the bid guarantee is available to offset the difference.

(End of clause)

52.228-2 ADDITIONAL BOND SECURITY (OCT 1997)

The Contractor shall promptly furnish additional security required to protect the Government and persons supplying labor or materials under this contract if--

(a) Any surety upon any bond, or issuing financial institution for other security, furnished with this contract becomes unacceptable to the Government.

(b) Any surety fails to furnish reports on its financial condition as required by the Government;

(c) The contract price is increased so that the penal sum of any bond becomes inadequate in the opinion of the Contracting Officer; or

(d) An irrevocable letter of credit (ILC) used as security will expire before the end of the period of required security. If the Contractor does not furnish an acceptable extension or replacement ILC, or other acceptable substitute, at least

30 days before an ILC's scheduled expiration, the Contracting officer has the right to immediately draw on the ILC.

(End of clause)

52.228-5 INSURANCE--WORK ON A GOVERNMENT INSTALLATION (JAN 1997)

(a) The Contractor shall, at its own expense, provide and maintain during the entire performance of this contract, at least the kinds and minimum amounts of insurance required in the Schedule or elsewhere in the contract.

(b) Before commencing work under this contract, the Contractor shall notify the Contracting Officer in writing that the required insurance has been obtained. The policies evidencing required insurance shall contain an endorsement to the effect that any cancellation or any material change adversely affecting the Government's interest shall not be effective (1) for such period as the laws of the State in which this contract is to be performed prescribe, or (2) until 30 days after the insurer or the Contractor gives written notice to the Contracting Officer, whichever period is longer.

(c) The Contractor shall insert the substance of this clause, including this paragraph (c), in subcontracts under this contract that require work on a Government installation and shall require subcontractors to provide and maintain the insurance required in the Schedule or elsewhere in the contract. The Contractor shall maintain a copy of all subcontractors' proofs of required insurance, and shall make copies available to the Contracting Officer upon request.

(End of clause)

52.228-11 PLEDGES OF ASSETS (FEB 1992)

(a) Offerors shall obtain from each person acting as an individual surety on a bid guarantee, a performance bond, or a payment bond--

(1) Pledge of assets; and

(2) Standard Form 28, Affidavit of Individual Surety.

(b) Pledges of assets from each person acting as an individual surety shall be in the form of--

(1) Evidence of an escrow account containing cash, certificates of deposit, commercial or Government securities, or other assets described in FAR 28.203-2 (except see 28.203-2(b)(2) with respect to Government securities held in book entry form) and/or;

(2) A recorded lien on real estate. The offeror will be required to provide--

(i) Evidence of title in the form of a certificate of title prepared by a title insurance company approved by the United States Department of Justice. This title evidence must show fee simple title vested in the surety along with any concurrent owners; whether any real estate taxes are due and payable; and any recorded encumbrances against the property, including the lien filed in favor of the Government as required by FAR 28.203-3(d);

(ii) Evidence of the amount due under any encumbrance shown in the evidence of title;

(iii) A copy of the current real estate tax assessment of the property or a current appraisal dated no earlier than 6 months prior to the date of the bond, prepared by a professional appraiser who certifies that the appraisal has been conducted in accordance with the generally accepted appraisal standards as reflected in the Uniform Standards of

Professional Appraisal Practice, as promulgated by the Appraisal Foundation.

(End of clause)

52.228-12 PROSPECTIVE SUBCONTRACTOR REQUESTS FOR BONDS. (OCT 1995)

In accordance with Section 806(a)(3) of Pub. L. 102-190, as amended by Sections 2091 and 8105 of Pub. L. 103-355, upon the request of a prospective subcontractor or supplier offering to furnish labor or material for the performance of this contract for which a payment bond has been furnished to the Government pursuant to the Miller Act, the Contractor shall promptly provide a copy of such payment bond to the requester.

(End of clause)

52.228-14 IRREVOCABLE LETTER OF CREDIT (DEC 1999)

(a) "Irrevocable letter of credit" (ILC), as used in this clause, means a written commitment by a federally insured financial institution to pay all or part of a stated amount of money, until the expiration date of the letter, upon presentation by the Government (the beneficiary) of a written demand therefor. Neither the financial institution nor the offeror/Contractor can revoke or condition the letter of credit.

(b) If the offeror intends to use an ILC in lieu of a bid bond, or to secure other types of bonds such as performance and payment bonds, the letter of credit and letter of confirmation formats in paragraphs (e) and (f) of this clause shall be used.

(c) The letter of credit shall be irrevocable, shall require presentation of no document other than a written demand and the ILC (including confirming letter, if any), shall be issued/confirmed by an acceptable federally insured financial institution as provided in paragraph (d) of this clause, and--

(1) If used as a bid guarantee, the ILC shall expire no earlier than 60 days after the close of the bid acceptance period;

(2) If used as an alternative to corporate or individual sureties as security for a performance or payment bond, the offeror/Contractor may submit an ILC with an initial expiration date estimated to cover the entire period for which financial security is required or may submit an ILC with an initial expiration date that is a minimum period of one year from the date of issuance. The ILC shall provide that, unless the issuer provides the beneficiary written notice of non-renewal at least 60 days in advance of the current expiration date, the ILC is automatically extended without amendment for one year from the expiration date, or any future expiration date, until the period of required coverage is completed and the Contracting Officer provides the financial institution with a written statement waiving the right to payment. The period of required coverage shall be:

(i) For contracts subject to the Miller Act, the later of--

(A) One year following the expected date of final payment;

(B) For performance bonds only, until completion of any warranty period; or

(C) For payment bonds only, until resolution of all claims filed against the payment bond during the one-year period following final payment.

(ii) For contracts not subject to the Miller Act, the later of--

(A) 90 days following final payment; or

(B) For performance bonds only, until completion of any warranty period.

(d) Only federally insured financial institutions rated investment grade or higher shall issue or confirm the ILC. The offeror/Contractor shall provide the Contracting Officer a credit rating that indicates the financial institution has the required rating(s) as of the date of issuance of the ILC. Unless the financial institution issuing the ILC had letter of credit business of less than $25 million in the past year, ILCs over $5 million must be confirmed by another acceptable financial institution that had letter of credit business of less than $25 million in the past year.

(e) The following format shall be used by the issuing financial institution to create an ILC:

_____

[Issuing Financial Institution's Letterhead or Name and Address]

Issue Date _____

IRREVOCABLE LETTER OF CREDIT NO. _____

Account party's name _____

Account party's address _____

For Solicitation No. _____(for reference only)

TO: [U.S. Government agency]

[U.S. Government agency's address]

1. We hereby establish this irrevocable and transferable Letter of Credit in your favor for one or more drawings up to United States $_____. This Letter of Credit is payable at [issuing financial institution's and, if any, confirming financial institution's] office at [issuing financial institution's address and, if any, confirming financial institution's address] and expires with our close of business on _____, or any automatically extended expiration date.

2. We hereby undertake to honor your or the transferee's sight draft(s) drawn on the issuing or, if any, the confirming financial institution, for all or any part of this credit if presented with this Letter of Credit and confirmation, if any, at the office specified in paragraph 1 of this Letter of Credit on or before the expiration date or any automatically extended expiration date.

3. [This paragraph is omitted if used as a bid guarantee, and subsequent paragraphs are renumbered.] It is a condition of this Letter of Credit that it is deemed to be automatically extended without amendment for one year from the expiration date hereof, or any future expiration date, unless at least 60 days prior to any expiration date, we notify you or the transferee by registered mail, or other receipted means of delivery, that we elect not to consider this Letter of Credit renewed for any such additional period. At the time we notify you, we also agree to notify the account party (and confirming financial institution, if any) by the same means of delivery.

4. This Letter of Credit is transferable. Transfers and assignments of proceeds are to be effected without charge to either the beneficiary or the transferee/assignee of proceeds. Such transfer or assignment shall be only at the written direction of the Government (the beneficiary) in a form satisfactory to the issuing financial institution and the confirming financial institution, if any.

5. This Letter of Credit is subject to the Uniform Customs and Practice (UCP) for Documentary Credits, 1993 Revision,

International Chamber of Commerce Publication No. 500, and to the extent not inconsistent therewith, to the laws of _____ [state of confirming financial institution, if any, otherwise state of issuing financial institution].

6. If this credit expires during an interruption of business of this financial institution as described in Article 17 of the UCP, the financial institution specifically agrees to effect payment if this credit is drawn against within 30 days after the resumption of our business.

Sincerely,

_____

[Issuing financial institution]

(f) The following format shall be used by the financial institution to confirm an ILC:

_____
[Confirming Financial Institution's Letterhead or Name and Address]

(Date) _____

Our Letter of Credit Advice Number _____

Beneficiary: _____ [U.S. Government agency]

Issuing Financial Institution: _____

Issuing Financial Institution's LC No.: _____

Gentlemen:

1. We hereby confirm the above indicated Letter of Credit, the original of which is attached, issued by _____ [name of issuing financial institution] for drawings of up to United States dollars _____/U.S. $_____ and expiring with our close of business on _____ [the expiration date], or any automatically extended expiration date.

2. Draft(s) drawn under the Letter of Credit and this Confirmation are payable at our office located at _____.

3. We hereby undertake to honor sight draft(s) drawn under and presented with the Letter of Credit and this Confirmation at our offices as specified herein.

4. [This paragraph is omitted if used as a bid guarantee, and subsequent paragraphs are renumbered.] It is a condition of this confirmation that it be deemed automatically extended without amendment for one year from the expiration date hereof, or any automatically extended expiration date, unless:

(a) At least 60 days prior to any such expiration date, we shall notify the Contracting Officer, or the transferee and the issuing financial institution, by registered mail or other receipted means of delivery, that we elect not to consider this confirmation extended for any such additional period; or

(b) The issuing financial institution shall have exercised its right to notify you or the transferee, the account party, and ourselves, of its election not to extend the expiration date of the Letter of Credit.

5. This confirmation is subject to the Uniform Customs and Practice (UCP) for Documentary Credits, 1993 Revision, International Chamber of Commerce Publication No. 500, and to the extent not inconsistent therewith, to the laws of _____ [state of confirming financial institution].

6. If this confirmation expires during an interruption of business of this financial institution as described in Article 17 of the UCP, we specifically agree to effect payment if this credit is drawn against within 30 days after the resumption of our business.

Sincerely,

_____

[Confirming financial institution]

(g) The following format shall be used by the Contracting Officer for a sight draft to draw on the Letter of Credit:

SIGHT DRAFT

_____

[City, State]

(Date) _____

[Name and address of financial institution]

Pay to the order of _____ [Beneficiary Agency] _____ the sum of United States $_____. This draft is drawn under Irrevocable Letter of Credit No. _____.

_____

[Beneficiary Agency]

By: _____

(End of clause)

52.228-15 PERFORMANCE AND PAYMENT BONDS--CONSTRUCTION (JUL 2000)-

(a) Definitions. As used in this clause--

Original contract price means the award price of the contract; or, for requirements contracts, the price payable for the estimated total quantity; or, for indefinite-quantity contracts, the price payable for the specified minimum quantity. Original contract price does not include the price of any options, except those options exercised at the time of contract award.

(b) Amount of required bonds. Unless the resulting contract price is $100,000 or less, the successful offeror shall furnish performance and payment bonds to the Contracting Officer as follows:

(1) Performance bonds (Standard Form 25). The penal amount of performance bonds at the time of contract award shall be 100 percent of the original contract price.

(2) Payment Bonds (Standard Form 25-A). The penal amount of payment bonds at the time of contract award shall be 100 percent of the original contract price.

(3) Additional bond protection. (i) The Government may require additional performance and payment bond protection if the contract price is increased. The increase in protection generally will equal 100 percent of the increase in contract price.

(ii) The Government may secure the additional protection by directing the Contractor to increase the penal amount of the existing bond or to obtain an additional bond.

(c) Furnishing executed bonds. The Contractor shall furnish all executed bonds, including any necessary reinsurance agreements, to the Contracting Officer, within the time period specified in the Bid Guarantee provision of the solicitation, or otherwise specified by the Contracting Officer, but in any event, before starting work.

(d) Surety or other security for bonds. The bonds shall be in the form of firm commitment, supported by corporate sureties whose names appear on the list contained in Treasury Department Circular 570, individual sureties, or by other acceptable security such as postal money order, certified check, cashier's check, irrevocable letter of credit, or, in accordance with Treasury Department regulations, certain bonds or notes of the United States. Treasury Circular 570 is published in the Federal Register or may be obtained from the U.S. Department of Treasury, Financial Management Service, Surety Bond Branch, 401 14th Street, NW, 2nd Floor, West Wing, Washington, DC 20227.

(e) Notice of subcontractor waiver of protection (40 U.S.C. 270b(c). Any waiver of the right to sue on the payment bond is void unless it is in writing, signed by the person whose right is waived, and executed after such person has first furnished labor or material for use in the performance of the contract.

(End of clause)

52.229-2 NORTH CAROLINA STATE AND LOCAL SALES AND USE TAX (APR 1984)

(a) "Materials," as used in this clause, means building materials, supplies, fixtures, and equipment that become a part of or are annexed to any building or structure erected, altered, or repaired under this contract.

(b) If this is a fixed-price contract, the contract price includes North Carolina State and local sales and use taxes to be paid on materials, notwithstanding any other provision of this contract. If this is a cost-reimbursement contract, any North Carolina State and local sales and use taxes paid by the Contractor on materials shall constitute an allowable cost under this contract.

(c) At the time specified in paragraph (d) below, the Contractor shall furnish the Contracting Officer certified statements setting forth the cost of the materials purchased from each vendor and the amount of North Carolina State and local sales and use taxes paid. In the event the Contractor makes several purchases from the same vendor, the certified statement shall indicate the invoice numbers, the inclusive dates of the invoices, the total amount of the invoices, and the North Carolina State and local sales and use taxes paid. The statement shall also include the cost of any tangible personal property withdrawn from the Contractor's warehouse stock and the amount of North Carolina State and local sales or use tax paid on this property by the Contractor. Any local sales or use taxes included in the Contractor's statements must be shown separately from the State sales or use taxes. The Contractor shall furnish any additional information the Commissioner of Revenue of the State of North Carolina may require to substantiate a refund claim for sales or use taxes. The Contractor shall also obtain and furnish to the Contracting Officer similar certified statements by its subcontractors.

(d) If this contract is completed before the next October 1, the certified statements to be furnished pursuant to

paragraph (c) above shall be submitted within 60 days after completion. If this contract is not completed before the next October 1, the certified statements shall be submitted on or before November 30 of each year and shall cover taxes paid during the 12-month period that ended the preceding September 30.

(e) The certified statements to be furnished pursuant to paragraph (c) above shall be in the following form: I hereby certify that during the period . . . . to . . . .[insert dates], ... [insert name of Contractor or subcontractor] paid North Carolina State and local sales and use taxes aggregating $ . . . . (State) and $ . . . . (local), with respect to building materials, supplies, fixtures, and equipment that have become a part of or annexed to a building or structure erected, altered, or repaired by . . . . [insert name of Contractor or subcontractor] for the United States of America, and that the vendors from whom the property was purchased, the dates and numbers of the invoices covering the purchases, the total amount of the invoices of each vendor, the North Carolina State and local sales and use taxes paid on the property (shown separately), and the cost of property withdrawn from warehouse stock and North Carolina State and local sales or use taxes paid on this property are as set forth in the attachments.

(End of clause)

52.229-3 FEDERAL, STATE, AND LOCAL TAXES (JAN 1991)

(a) "Contract date," as used in this clause, means the date set for bid opening or, if this is a negotiated contract or a modification, the effective date of this contract or modification.

"All applicable Federal, State, and local taxes and duties," as used in this clause, means all taxes and duties, in effect on the contract date, that the taxing authority is imposing and collecting on the transactions or property covered by this contract.

"After-imposed Federal tax," as used in this clause, means any new or increased Federal excise tax or duty, or tax that was exempted or excluded on the contract date but whose exemption was later revoked or reduced during the contract period, on the transactions or property covered by this contract that the Contractor is required to pay or bear as the result of legislative, judicial, or administrative action taking effect after the contract date. It does not include social security tax or other employment taxes.
"After-relieved Federal tax," as used in this clause, means any amount of Federal excise tax or duty, except social security or other employment taxes, that would otherwise have been payable on the transactions or property covered by this contract, but which the Contractor is not required to pay or bear, or for which the Contractor obtains a refund or drawback, as the result of legislative, judicial, or administrative action taking effect after the contract date.

(b) The contract price includes all applicable Federal, State, and local taxes and duties.

(c) The contract price shall be increased by the amount of any after-imposed Federal tax, provided the Contractor warrants in writing that no amount for such newly imposed Federal excise tax or duty or rate increase was included in the contract price, as a contingency reserve or otherwise.

(d) The contract price shall be decreased by the amount of any after-relieved Federal tax.

(e) The contract price shall be decreased by the amount of any Federal excise tax or duty, except social security or other employment taxes, that the Contractor is required to pay or bear, or does not obtain a refund of, through the Contractor's fault, negligence, or failure to follow instructions of the Contracting Officer.

(f) No adjustment shall be made in the contract price under this clause unless the amount of the adjustment exceeds $250.

(g) The Contractor shall promptly notify the Contracting Officer of all matters relating to any Federal excise tax or

duty that reasonably may be expected to result in either an increase or decrease in the contract price and shall take appropriate action as the Contracting Officer directs.

(h) The Government shall, without liability, furnish evidence appropriate to establish exemption from any Federal, State, or local tax when the Contractor requests such evidence and a reasonable basis exists to sustain the exemption.

(End of clause)

52.229-5 TAXES--CONTRACTS PERFORMED IN U.S. POSSESSIONS OR PUERTO RICO (APR 1984)

The term "local taxes," as used in the Federal, State, and local taxes clause of this contract, includes taxes imposed by a possession of the United States or by Puerto Rico.

(End of clause)

52.232-5 PAYMENTS UNDER FIXED-PRICE CONSTRUCTION CONTRACTS (SEP 2002)

(a) Payment of price. The Government shall pay the Contractor the contract price as provided in this contract.

(b) Progress payments. The Government shall make progress payments monthly as the work proceeds, or at more frequent intervals as determined by the Contracting Officer, on estimates of work accomplished which meets the standards of quality established under the contract, as approved by the Contracting Officer.

(1) The Contractor's request for progress payments shall include the following substantiation:

(i) An itemization of the amounts requested, related to the various elements of work required by the contract covered by the payment requested.

(ii) A listing of the amount included for work performed by each subcontractor under the contract.

(iii) A listing of the total amount of each subcontract under the contract.

(iv) A listing of the amounts previously paid to each such subcontractor under the contract.

(v) Additional supporting data in a form and detail required by the Contracting Officer.

(2) In the preparation of estimates, the Contracting Officer may authorize material delivered on the site and preparatory work done to be taken into consideration. Material delivered to the Contractor at locations other than the site also may be taken into consideration if--

(i) Consideration is specifically authorized by this contract; and

(ii) The Contractor furnishes satisfactory evidence that it has acquired title to such material and that the material will be used to perform this contract.

(c) Contractor certification. Along with each request for progress payments, the Contractor shall furnish the following certification, or payment shall not be made: (However, if the Contractor elects to delete paragraph (c)(4) from the certification, the certification is still acceptable.)

I hereby certify, to the best of my knowledge and belief, that--

(1) The amounts requested are only for performance in accordance with the specifications, terms, and conditions of the contract;

(2) All payments due to subcontractors and suppliers from previous payments received under the contract have been made, and timely payments will be made from the proceeds of the payment covered by this certification, in accordance with subcontract agreements and the requirements of chapter 39 of Title 31, United States Code;

(3) This request for progress payments does not include any amounts which the prime contractor intends to withhold or retain from a subcontractor or supplier in accordance with the terms and conditions of the subcontract; and

(4) This certification is not to be construed as final acceptance of a subcontractor's performance.

_____

(Name)

_____

(Title)

_____

(Date)

(d) Refund of unearned amounts. If the Contractor, after making a certified request for progress payments, discovers that a portion or all of such request constitutes a payment for performance by the Contractor that fails to conform to the specifications, terms, and conditions of this contract (hereinafter referred to as the "unearned amount"), the Contractor shall--

(1) Notify the Contracting Officer of such performance deficiency; and

(2) Be obligated to pay the Government an amount (computed by the Contracting Officer in the manner provided in paragraph (j) of this clause) equal to interest on the unearned amount from the 8th day after the date of receipt of the unearned amount until--

(i) The date the Contractor notifies the Contracting Officer that the performance deficiency has been corrected; or

(ii) The date the Contractor reduces the amount of any subsequent certified request for progress payments by an amount equal to the unearned amount.

(e) Retainage. If the Contracting Officer finds that satisfactory progress was achieved during any period for which a progress payment is to be made, the Contracting Officer shall authorize payment to be made in full. However, if satisfactory progress has not been made, the Contracting Officer may retain a maximum of 10 percent of the amount of the payment until satisfactory progress is achieved. When the work is substantially complete, the Contracting Officer may retain from previously withheld funds and future progress payments that amount the Contracting Officer considers adequate for protection of the Government and shall release to the Contractor all the remaining withheld funds. Also, on completion and acceptance of each separate building, public work, or other division of the contract, for which the price is stated separately in the contract, payment shall be made for the completed work without retention of a percentage.

(f) Title, liability, and reservation of rights. All material and work covered by progress payments made shall, at the time of payment, become the sole property of the Government, but this shall not be construed as--

(1) Relieving the Contractor from the sole responsibility for all material and work upon which payments have been made or the restoration of any damaged work; or

(2) Waiving the right of the Government to require the fulfillment of all of the terms of the contract.

(g) Reimbursement for bond premiums. In making these progress payments, the Government shall, upon request, reimburse the Contractor for the amount of premiums paid for performance and payment bonds (including coinsurance and reinsurance agreements, when applicable) after the Contractor has furnished evidence of full payment to the surety. The retainage provisions in paragraph (e) of this clause shall not apply to that portion of progress payments attributable to bond premiums.

(h) Final payment. The Government shall pay the amount due the Contractor under this contract after--

(1) Completion and acceptance of all work;

(2) Presentation of a properly executed voucher; and

(3) Presentation of release of all claims against
the Government arising by virtue of this contract, other than claims, in stated amounts, that the Contractor has specifically excepted from the operation of the release. A release may also be required of the assignee if the Contractor's claim to amounts payable under this contract has been assigned under the Assignment of Claims Act of 1940 (31 U.S.C. 3727 and 41 U.S.C. 15).

(i) Limitation because of undefinitized work. Notwithstanding any provision of this contract, progress payments shall not exceed 80 percent on work accomplished on undefinitized contract actions. A "contract action" is any action resulting in a contract, as defined in FAR Subpart 2.1, including contract modifications for additional supplies or services, but not including contract modifications that are within the scope and under the terms of the contract, such as contract modifications issued pursuant to the Changes clause, or funding and other administrative changes.

(j) Interest computation on unearned amounts. In accordance with 31 U.S.C. 3903(c)(1), the amount payable under subparagraph (d)(2) of this clause shall be--

(1) Computed at the rate of average bond equivalent rates of 91-day Treasury bills auctioned at the most recent auction of such bills prior to the date the Contractor receives the unearned amount; and

(2) Deducted from the next available payment to the Contractor.

(End of clause)

52.232-17 INTEREST (JUNE 1996)

(a) Except as otherwise provided in this contract under a Price Reduction for Defective Cost or Pricing Data clause or a Cost Accounting Standards clause, all amounts that become payable by the Contractor to the Government under this contract (net of any applicable tax credit under the Internal Revenue Code (26 U.S.C. 1481)) shall bear simple interest from the date due until paid unless paid within 30 days of becoming due. The interest rate shall be the interest rate established by the Secretary of the Treasury as provided in Section 12 of the Contract Disputes Act of 1978 (Public Law 95-563), which is applicable to the period in which the amount becomes due, as provided in paragraph (b) of this clause, and then at the rate applicable for each six-month period as fixed by the Secretary until the amount is paid. reproduce, prepare derivative works, distribute copies to the public, and (b) Amounts shall be due at the earliest of the following dates:

(1) The date fixed under this contract.

(2) The date of the first written demand for payment consistent with this contract, including any demand resulting from a default termination.

(3) The date the Government transmits to the Contractor a proposed supplemental agreement to confirm completed negotiations establishing the amount of debt.

(4) If this contract provides for revision of prices, the date of written notice to the Contractor stating the amount of refund payable in connection with a pricing proposal or a negotiated pricing agreement not confirmed by contract modification.

(c) The interest charge made under this clause may be reduced under the procedures prescribed in 32.614-2 of the Federal Acquisition Regulation in effect on the date of this contract.

(End of clause)

52.232-23 ASSIGNMENT OF CLAIMS (JAN 1986)

(a) The Contractor, under the Assignment of Claims Act, as amended, 31 U.S.C. 3727, 41 U.S.C. 15 (hereafter referred to as "the Act"), may assign its rights to be paid amounts due or to become due as a result of the performance of this contract to a bank, trust company, or other financing institution, including any Federal lending agency. The assignee under such an assignment may thereafter further assign or reassign its right under the original assignment to any type of financing institution described in the preceding sentence.

(b) Any assignment or reassignment authorized under the Act and this clause shall cover all unpaid amounts payable under this contract, and shall not be made to more than one party, except that an assignment or reassignment may be made to one party as agent or trustee for two or more parties participating in the financing of this contract.

(c) The Contractor shall not furnish or disclose to any assignee under this contract any classified document (including this contract) or information related to work under this contract until the Contracting Officer authorizes such action in writing.

(End of clause)

52.232-27 PROMPT PAYMENT FOR CONSTRUCTION CONTRACTS (FEB 2002)

Notwithstanding any other payment terms in this contract, the Government will make invoice payments under the terms and conditions specified in this clause. The Government considers payment as being made on the day a check is dated or the date of an electronic funds transfer. Definitions of pertinent terms are set forth in sections 2.101, 32.001, and 32.902 of the Federal Acquisition Regulation. All days referred to in this clause are calendar days, unless otherwise specified. (However, see paragraph (a)(3) concerning payments due on Saturdays, Sundays, and legal holidays.)

(a) Invoice payments--(1) Types of invoice payments. For purposes of this clause, there are several types of invoice payments that may occur under this contract, as follows:

(i) Progress payments, if provided for elsewhere in this contract, based on Contracting Officer approval of the estimated amount and value of work or services performed, including payments for reaching milestones in any project.

(A) The due date for making such payments is 14 days after the designated billing office receives a proper payment request. If the designated billing office fails to annotate the payment request with the actual date of receipt at the time of receipt, the payment due date is the 14th day after the date of the Contractor's payment request, provided the designated billing office receives a proper payment request and there is no disagreement over quantity, quality, or Contractor compliance with contract requirements.

(B) The due date for payment of any amounts retained by the Contracting Officer in accordance with the clause at 52.232-5, Payments Under Fixed-Price Construction Contracts, is as specified in the contract or, if not specified, 30 days after approval by the Contracting Officer for release to the Contractor.

(ii) Final payments based on completion and acceptance of all work and presentation of release of all claims against the Government arising by virtue of the contract, and payments for partial deliveries that have been accepted by the Government (e.g., each separate building, public work, or other division of the contract for which the price is stated separately in the contract).

(A) The due date for making such payments is the later of the following two events:

(1) The 30th day after the designated billing office receives a proper invoice from the Contractor.

(2) The 30th day after Government acceptance of the work or services completed by the Contractor. For a final invoice when the payment amount is subject to contract settlement actions (e.g., release of claims), acceptance is deemed to occur on the effective date of the contract settlement.

(B) If the designated billing office fails to annotate the invoice with the date of actual receipt at the time of receipt, the invoice payment due date is the 30th day after the date of the Contractor's invoice, provided the designated billing office receives a proper invoice and there is no disagreement over quantity, quality, or Contractor compliance with contract requirements.

(2) Contractor's invoice. The Contractor shall prepare and submit invoices to the designated billing office specified in the contract. A proper invoice must include the items listed in paragraphs (a)(2)(i) through (a)(2)(xi) of this clause. If the invoice does not comply with these requirements, the designated billing office must return it within 7 days after receipt, with the reasons why it is not a proper invoice. When computing any interest penalty owed the Contractor, the Government will take into account if the Government notifies the Contractor of an improper invoice in an untimely manner.

(i) Name and address of the Contractor.

(ii) Invoice date and invoice number. (The Contractor should date invoices as close as possible to the date of mailing or transmission.)

(iii) Contract number or other authorization for work or services performed (including order number and contract line item number).

(iv) Description of work or services performed.

(v) Delivery and payment terms (e.g., discount for prompt payment terms).

(vi) Name and address of Contractor official to whom payment is to be sent (must be the same as that in the contract or in a proper notice of assignment).

(vii) Name (where practicable), title, phone number, and mailing address of person to notify in the event of a defective invoice.

(viii) For payments described in paragraph (a)(1)(i) of this clause, substantiation of the amounts requested and certification in accordance with the requirements of the clause at 52.232-5, Payments Under Fixed-Price Construction Contracts.

(ix) Taxpayer Identification Number (TIN). The Contractor shall include its TIN on the invoice only if required elsewhere in this contract.

(x) Electronic funds transfer (EFT) banking information.

(A) The Contractor shall include EFT banking information on the invoice only if required elsewhere in this contract.

(B) If EFT banking information is not required to be on the invoice, in order for the invoice to be a proper invoice, the Contractor shall have submitted correct EFT banking information in accordance with the applicable solicitation provision (e.g., 52.232-38, Submission of Electronic Funds Transfer Information with Offer), contract clause (e.g., 52.232-33, Payment by Electronic Funds Transfer--Central Contractor Registration, or 52.232-34, Payment by Electronic Funds Transfer--Other Than Central Contractor Registration), or applicable agency procedures.

(C) EFT banking information is not required if the Government waived the requirement to pay by EFT.

(xi) Any other information or documentation required by the contract.

(3) Interest penalty. The designated payment office will pay an interest penalty automatically, without request from the Contractor, if payment is not made by the due date and the conditions listed in paragraphs (a)(3)(i) through (a)(3)(iii) of this clause are met, if applicable. However, when the due date falls on a Saturday, Sunday, or legal holiday, the designated payment office may make payment on the following working day without incurring a late payment interest penalty.

(i) The designated billing office received a proper invoice.

(ii) The Government processed a receiving report or other Government documentation authorizing payment and there was no disagreement over quantity, quality, Contractor compliance with any contract term or condition, or requested progress payment amount.

(iii) In the case of a final invoice for any balance of funds due the Contractor for work or services performed, the amount was not subject to further contract settlement actions between the Government and the Contractor.

(4) Computing penalty amount. The Government will compute the interest penalty in accordance with the Office of Management and Budget prompt payment regulations at 5 CFR part 1315.

(i) For the sole purpose of computing an interest penalty that might be due the Contractor for payments described in paragraph (a)(1)(ii) of this clause, Government acceptance or approval is deemed to occur constructively on the 7th day after the Contractor has completed the work or services in accordance with the terms and conditions of the contract. If actual acceptance or approval occurs within the constructive acceptance or approval period, the Government will base the determination of an interest penalty on the actual date of acceptance or approval. Constructive acceptance or constructive approval requirements do not apply if there is a disagreement over quantity, quality, or Contractor compliance with a contract provision. These requirements also do not compel Government officials to accept work or services, approve Contractor estimates, perform contract administration functions, or make payment prior to fulfilling their responsibilities.

(ii) The prompt payment regulations at 5 CFR 1315.10(c) do not require the Government to pay interest penalties if payment delays are due to disagreement between the Government and the Contractor over the payment amount or other issues involving contract compliance, or on amounts temporarily withheld or retained in accordance with the terms of the contract. The Government and the Contractor shall resolve claims involving disputes, and any interest that may be payable in accordance with the clause at FAR 52.233-1, Disputes.

(5) Discounts for prompt payment. The designated payment office will pay an interest penalty automatically, without request from the Contractor, if the Government takes a discount for prompt payment improperly. The Government will calculate the interest penalty in accordance with the prompt payment regulations at 5 CFR part 1315.

(6) Additional interest penalty. (i) The designated payment office will pay a penalty amount, calculated in accordance with the prompt payment regulations at 5 CFR part 1315 in addition to the interest penalty amount only if--

(A) The Government owes an interest penalty of $1 or more;

(B) The designated payment office does not pay the interest penalty within 10 days after the date the invoice amount is paid; and

(C) The Contractor makes a written demand to the designated payment office for additional penalty payment, in accordance with paragraph (a)(6)(ii) of this clause, postmarked not later than 40 days after the date the invoice amount is paid.

(ii)(A) The Contractor shall support written demands for additional penalty payments with the following data. The Government will not request any additional data. The Contractor shall--

(1) Specifically assert that late payment interest is due under a specific invoice, and request payment of all overdue late payment interest penalty and such additional penalty as may be required;

(2) Attach a copy of the invoice on which the unpaid late payment interest was due; and

(3) State that payment of the principal has been received, including the date of receipt.

(B) If there is no postmark or the postmark is illegible--

(1) The designated payment office that receives the demand will annotate it with the date of receipt provided the demand is received on or before the 40th day after payment was made; or

(2) If the designated payment office fails to make the required annotation, the Government will determine the demand's validity based on the date the Contractor has placed on the demand, provided such date is no later than the 40th day after payment was made.

(b) Contract financing payments. If this contract provides for contract financing, the Government will make contract financing payments in accordance with the applicable contract financing clause.

(c) Subcontract clause requirements. The Contractor shall include in each subcontract for property or services (including a material supplier) for the purpose of performing this contract the following:

(1) Prompt payment for subcontractors. A payment clause that obligates the Contractor to pay the subcontractor for satisfactory performance under its subcontract not later than 7 days from receipt of payment out of such amounts as are paid to the Contractor under this contract.

(2) Interest for subcontractors. An interest penalty clause that obligates the Contractor to pay to the subcontractor an interest penalty for each payment not made in accordance with the payment clause--

(i) For the period beginning on the day after the required payment date and ending on the date on which payment of the amount due is made; and

(ii) Computed at the rate of interest established by the Secretary of the Treasury, and published in the Federal Register, for interest payments under section 12 of the Contract Disputes Act of 1978 (41 U.S.C. 611) in effect at the time the Contractor accrues the obligation to pay an interest penalty.

(3) Subcontractor clause flowdown. A clause requiring each subcontractor to use:

(i) Include a payment clause and an interest penalty clause conforming to the standards set forth in paragraphs (c)(1) and (c)(2) of this clause in each of its subcontracts; and

(ii) Require each of its subcontractors to include such clauses in their subcontracts with each lower-tier subcontractor or supplier.

(d) Subcontract clause interpretation. The clauses required by paragraph (c) of this clause shall not be construed to impair the right of the Contractor or a subcontractor at any tier to negotiate, and to include in their subcontract, provisions that--

(1) Retainage permitted. Permit the Contractor or a subcontractor to retain (without cause) a specified percentage of each progress payment otherwise due to a subcontractor for satisfactory performance under the subcontract without incurring any obligation to pay a late payment interest penalty, in accordance with terms and conditions agreed to by the parties to the subcontract, giving such recognition as the parties deem appropriate to the ability of a subcontractor to furnish a performance bond and a payment bond;

(2) Withholding permitted. Permit the Contractor or subcontractor to make a determination that part or all of the subcontractor's request for payment may be withheld in accordance with the subcontract agreement; and

(3) Withholding requirements. Permit such withholding without incurring any obligation to pay a late payment penalty if--

(i) A notice conforming to the standards of paragraph (g) of this clause previously has been furnished to the subcontractor; and

(ii) The Contractor furnishes to the Contracting Officer a copy of any notice issued by a Contractor pursuant to paragraph (d)(3)(i) of this clause.

(e) Subcontractor withholding procedures. If a Contractor, after making a request for payment to the Government but before making a payment to a subcontractor for the subcontractor's performance covered by the payment request, discovers that all or a portion of the payment otherwise due such subcontractor is subject to withholding from the subcontractor in accordance with the subcontract agreement, then the Contractor shall--

(1) Subcontractor notice. Furnish to the subcontractor a notice conforming to the standards of paragraph (g) of this clause as soon as practicable upon ascertaining the cause giving rise to a withholding, but prior to the due date for subcontractor payment;

(2) Contracting Officer notice. Furnish to the Contracting Officer, as soon as practicable, a copy of the notice furnished to the subcontractor pursuant to paragraph (e)(1) of this clause;

(3) Subcontractor progress payment reduction. Reduce the subcontractor's progress payment by an amount not to exceed the amount specified in the notice of withholding furnished under paragraph (e)(1) of this clause;

(4) Subsequent subcontractor payment. Pay the subcontractor as soon as practicable after the correction of the identified subcontract performance deficiency, and--

(i) Make such payment within--

(A) Seven days after correction of the identified subcontract performance deficiency (unless the funds therefor must be recovered from the Government because of a reduction under paragraph
(e)(5)(i)) of this clause; or

(B) Seven days after the Contractor recovers such funds from the Government; or

(ii) Incur an obligation to pay a late payment interest penalty computed at the rate of interest established by the Secretary of the Treasury, and published in the Federal Register, for interest payments under section 12 of the Contracts Disputes Act of 1978 (41 U.S.C. 611) in effect at the time the Contractor accrues the obligation to pay an interest penalty;

(5) Notice to Contracting Officer. Notify the Contracting Officer upon--

(i) Reduction of the amount of any subsequent certified application for payment; or

(ii) Payment to the subcontractor of any withheld amounts of a progress payment, specifying--

(A) The amounts withheld under paragraph (e)(1) of this clause; and

(B) The dates that such withholding began and ended; and

(6) Interest to Government. Be obligated to pay to the Government an amount equal to interest on the withheld payments (computed in the manner provided in 31 U.S.C. 3903(c)(1)), from the 8th day after receipt of the withheld amounts from the Government until--

(i) The day the identified subcontractor performance deficiency is corrected; or

(ii) The date that any subsequent payment is reduced under paragraph (e)(5)(i) of this clause.

(f) Third-party deficiency reports--(1) Withholding from subcontractor. If a Contractor, after making payment to a first-tier subcontractor, receives from a supplier or subcontractor of the first-tier subcontractor (hereafter referred to as a “second-tier subcontractor”) a written notice in accordance with section 2 of the Act of August 24, 1935 (40 U.S.C. 270b, Miller Act), asserting a deficiency in such first-tier subcontractor's performance under the contract for which the Contractor may be ultimately liable, and the Contractor determines that all or a portion of future payments otherwise due such first-tier subcontractor is subject to withholding in accordance with the subcontract agreement, the Contractor may, without incurring an obligation to pay an interest penalty under paragraph (e)(6) of this clause--

(i) Furnish to the first-tier subcontractor a notice conforming to the standards of paragraph (g) of this clause as soon as practicable upon making such determination; and

(ii) Withhold from the first-tier subcontractor's next available progress payment or payments an amount not to exceed the amount specified in the notice of withholding furnished under paragraph (f)(1)(i) of this clause.

(2) Subsequent payment or interest charge. As soon as practicable, but not later than 7 days after receipt of satisfactory written notification that the identified subcontract performance deficiency has been corrected, the Contractor shall--

(i) Pay the amount withheld under paragraph (f)(1)(ii) of this clause to such first-tier subcontractor; or

(ii) Incur an obligation to pay a late payment interest penalty to such first-tier subcontractor computed at the rate of interest established by the Secretary of the Treasury, and published in the Federal Register, for interest payments under section 12 of the Contracts DisputesAct of 1978 (41 U.S.C. 611) in effect at the time the Contractor accrues the obligation to pay an interest penalty.

(g) Written notice of subcontractor withholding. The Contractor shall issue a written notice of any withholding to a subcontractor (with a copy furnished to the Contracting Officer), specifying--

(1) The amount to be withheld;

(2) The specific causes for the withholding under the terms of the subcontract; and

(3) The remedial actions to be taken by the subcontractor in order to receive payment of the amounts withheld.

(h) Subcontractor payment entitlement. The Contractor may not request payment from the Government of any amount withheld or retained in accordance with paragraph (d) of this clause until such time as the Contractor has determined and certified to the Contracting Officer that the subcontractor is entitled to the payment of such amount.

(i) Prime-subcontractor disputes. A dispute between the Contractor and subcontractor relating to the amount or entitlement of a subcontractor to a payment or a late payment interest penalty under a clause included in the subcontract pursuant to paragraph (c) of this clause does not constitute a dispute to which the Government is a party. The Government may not be interpleaded in any judicial or administrative proceeding involving such a dispute.

(j) Preservation of prime-subcontractor rights. Except as provided in paragraph (i) of this clause, this clause shall not limit or impair any contractual, administrative, or judicial remedies otherwise available to the Contractor or a subcontractor in the event of a dispute involving late payment or nonpayment by the Contractor or deficient subcontract performance or nonperformance by a subcontractor.

(k) Non-recourse for prime contractor interest penalty. The Contractor's obligation to pay an interest penalty to a subcontractor pursuant to the clauses included in a subcontract under paragraph (c) of this clause shall not be construed to be an obligation of the Government for such interest penalty. A cost-reimbursement claim may not include any amount for reimbursement of such interest penalty.

(l) Overpayments. If the Contractor becomes aware of a duplicate payment or that the Government has otherwise overpaid on an invoice payment, the Contractor shall immediately notify the Contracting Officer and request instructions for disposition of the overpayment.

(End of clause)

52.232-33 PAYMENT BY ELECTRONIC FUNDS TRANSFER—CENTRAL CONTRACTOR REGISTRATION (MAY 1999)

(a) Method of payment. (1) All payments by the Government under this contract shall be made by electronic funds transfer (EFT), except as provided in paragraph (a)(2) of this clause. As used in this clause, the term “EFT” refers to the funds transfer and may also include the payment information transfer.

(2) In the event the Government is unable to release one or more payments by EFT, the Contractor agrees to either--

(i) Accept payment by check or some other mutually agreeable method of payment; or

(ii) Request the Government to extend the payment due date until such time as the Government can make payment by EFT (but see paragraph (d) of this clause).

(b) Contractor's EFT information. The Government shall make payment to the Contractor using the EFT information contained in the Central Contractor Registration (CCR) database. In the event that the EFT information changes, the Contractor shall be responsible for providing the updated information to the CCR database.

(c) Mechanisms for EFT payment. The Government may make payment by EFT through either the Automated Clearing House (ACH) network, subject to the rules of the National Automated Clearing House Association, or the Fedwire Transfer System. The rules governing Federal payments through the ACH are contained in 31 CFR part 210.

(d) Suspension of payment. If the Contractor's EFT information in the CCR database is incorrect, then the Government need not make payment to the Contractor under this contract until correct EFT information is entered into the CCR database; and any invoice or contract financing request shall be deemed not to be a proper invoice for the purpose of prompt payment under this contract. The prompt payment terms of the contract regarding notice of an improper invoice and delays in accrual of interest penalties apply.

(e) Contractor EFT arrangements. If the Contractor has identified multiple payment receiving points (i.e., more than one remittance address and/or EFT information set) in the CCR database, and the Contractor has not notified the Government of the payment receiving point applicable to this contract, the Government shall make payment to the first payment receiving point (EFT information set or remittance address as applicable) listed in the CCR database.

(f) Liability for uncompleted or erroneous transfers. (1) If an uncompleted or erroneous transfer occurs because the Government used the Contractor's EFT information incorrectly, the Government remains responsible for--

(i) Making a correct payment;

(ii) Paying any prompt payment penalty due; and

(iii) Recovering any erroneously directed funds.

(2) If an uncompleted or erroneous transfer occurs because the Contractor's EFT information was incorrect, or was revised within 30 days of Government release of the EFT payment transaction instruction to the Federal Reserve System, and--

(i) If the funds are no longer under the control of the payment office, the Government is deemed to have made payment and the Contractor is responsible for recovery of any erroneously directed funds; or

(ii) If the funds remain under the control of the payment office, the Government shall not make payment, and the provisions of paragraph (d) of this clause shall apply.

(g) EFT and prompt payment. A payment shall be deemed to have been made in a timely manner in accordance with the prompt payment terms of this contract if, in the EFT payment transaction instruction released to the Federal Reserve System, the date specified for settlement of the payment is on or before the prompt payment due date, provided the specified payment date is a valid date under the rules of the Federal Reserve System.

(h) EFT and assignment of claims. If the Contractor assigns the proceeds of this contract as provided for in the assignment of claims terms of this contract, the Contractor shall require as a condition of any such assignment, that the assignee shall register in the CCR database and shall be paid by EFT in accordance with the terms of this clause. In all respects, the requirements of this clause shall apply to the assignee as if it were the Contractor. EFT information that shows the ultimate recipient of the transfer to be other than the Contractor, in the absence of a proper

assignment of claims acceptable to the Government, is incorrect EFT information within the meaning of paragraph (d) of this clause.

(i) Liability for change of EFT information by financial agent. The Government is not liable for errors resulting from changes to EFT information made by the Contractor's financial agent.

(j) Payment information. The payment or disbursing office shall forward to the Contractor available payment information that is suitable for transmission as of the date of release of the EFT instruction to the Federal Reserve System. The Government may request the Contractor to designate a desired format and method(s) for delivery of payment information from a list of formats and methods the payment office is capable of executing. However, the Government does not guarantee that any particular format or method of delivery is available at any particular payment office and retains the latitude to use the format and delivery method most convenient to the Government. If the Government makes payment by check in accordance with paragraph (a) of this clause, the Government shall mail the payment information to the remittance address contained in the CCR database.

(End of Clause)

52.233-1 DISPUTES. (JUL 2002)

(a) This contract is subject to the Contract Disputes Act of 1978, as amended (41 U.S.C. 601-613).

(b) Except as provided in the Act, all disputes arising under or relating to this contract shall be resolved under this clause.

(c) Claim, as used in this clause, means a written demand or written assertion by one of the contracting parties seeking, as a matter of right, the payment of money in a sum certain, the adjustment or interpretation of contract terms, or other relief arising under or relating to this contract. However, a written demand or written assertion by the Contractor seeking the payment of money exceeding $100,000 is not a claim under the Act until certified. A voucher, invoice, or other routine request for payment that is not in dispute when submitted is not a claim under the Act. The submission may be converted to a claim under the Act, by complying with the submission and certification requirements of this clause, if it is disputed either as to liability or amount or is not acted upon in a reasonable time.

(d)(1) A claim by the Contractor shall be made in writing and, unless otherwise stated in this contract, submitted within 6 years after accrual of the claim to the Contracting Officer for a written decision. A claim by the Government against the Contractor shall be subject to a written decision by the Contracting Officer.

(2)(i) The contractors shall provide the certification specified in subparagraph (d)(2)(iii) of this clause when submitting any claim -

(A) Exceeding $100,000; or

(B) Regardless of the amount claimed, when using -

(1) Arbitration conducted pursuant to 5 U.S.C. 575-580; or

(2) Any other alternative means of dispute resolution (ADR) technique that the agency elects to handle in accordance with the Administrative Dispute Resolution Act (ADRA).

(ii) The certification requirement does not apply to issues in controversy that have not been submitted as all or part of a claim.

(iii) The certification shall state as follows: "I certify that the claim is made in good faith; that the supporting data are accurate and complete to the best of my knowledge and belief; that the amount requested accurately reflects the contract adjustment for which the Contractor believes the Government is liable; and that I am duly authorized to certify the claim on behalf of the Contractor.

(3) The certification may be executed by any person duly authorized to bind the Contractor with respect to the claim.

(e) For Contractor claims of $100,000 or less, the Contracting Officer must, if requested in writing by the Contractor, render a decision within 60 days of the request. For Contractor-certified claims over $100,000, the Contracting Officer must, within 60 days, decide the claim or notify the Contractor of the date by which the decision will be made.

(f) The Contracting Officer's decision shall be final unless the Contractor appeals or files a suit as provided in the Act.

(g) If the claim by the Contractor is submitted to the Contracting Officer or a claim by the Government is presented to the Contractor, the parties, by mutual consent, may agree to use alternative disput resolution (ADR). If the Contractor refuses an offer for ADR, the Contractor shall inform the Contracting Officer, in writing, of the Contractor's specific reasons for rejecting the request.

(h) The Government shall pay interest on the amount found due and unpaid from (1) the date the Contracting Officer receives the claim (certified, if required); or (2) the date that payment otherwise would be due, if that date is later, until the date of payment. With regard to claims having defective certifications, as defined in (FAR) 48 CFR 33.201, interest shall be paid from the date that the Contracting Officer initially receives the claim. Simple interest on claims shall be paid at the rate, fixed by the Secretary of the Treasury as provided in the Act, which is applicable to the period during which the Contracting Officer receives the claim and then at the rate applicable for each 6-month period as fixed by the Treasury Secretary during the pendency of the claim.

(i) The Contractor shall proceed diligently with performance of this contract, pending final resolution of any request for relief, claim, appeal, or action arising under the contract, and comply with any decision of the Contracting Officer.

(End of clause)

52.233-3 PROTEST AFTER AWARD (AUG. 1996)

(a) Upon receipt of a notice of protest (as defined in FAR 33.101) or a determination that a protest is likely (see FAR 33.102(d)), the Contracting Officer may, by written order to the Contractor, direct the Contractor to stop performance of the work called for by this contract. The order shall be specifically identified as a stop-work order issued under this clause. Upon receipt of the order, the Contractor shall immediately comply with its terms and take all reasonable steps to minimize the incurrence of costs allocable to the work covered by the order during the period of work stoppage. Upon receipt of the final decision in the protest, the Contracting Officer shall either--

(1) Cancel the stop-work order; or

(2) Terminate the work covered by the order as provided in the Default, or the Termination for Convenience of the Government, clause of this contract.

(b) If a stop-work order issued under this clause is canceled either before or after a final decision in the protest, the Contractor shall resume work. The Contracting Officer shall make an equitable adjustment in the delivery schedule or contract price, or both, and the contract shall be modified, in writing, accordingly, if--

(1) The stop-work order results in an increase in the time required for, or in the Contractor's cost properly allocable to,

the performance of any part of this contract; and

(2) The Contractor asserts its right to an adjustment within 30 days after the end of the period of work stoppage; provided, that if the Contracting Officer decides the facts justify the action, the Contracting Officer may receive and act upon a proposal at any time before final payment under this contract.

(c) If a stop-work order is not canceled and the work covered by the order is terminated for the convenience of the Government, the Contracting Officer shall allow reasonable costs resulting from the stop-work order in arriving at the termination settlement.

(d) If a stop-work order is not canceled and the work covered by the order is terminated for default, the Contracting Officer shall allow, by equitable adjustment or otherwise, reasonable costs resulting from the stop-work order.

(e) The Government's rights to terminate this contract at any time are not affected by action taken under this clause.

(f) If, as the result of the Contractor's intentional or negligent misstatement, misrepresentation, or miscertification, a protest related to this contract is sustained, and the Government pays costs, as provided in FAR 33.102(b)(2) or 33.104(h)(1), the Government may require the Contractor to reimburse the Government the amount of such costs. In addition to any other remedy available, and pursuant to the requirements of Subpart 32.6, the Government may collect this debt by offsetting the amount against any payment due the Contractor under any contract between the Contractor and the Government.

(End of clause)

52.236-2 DIFFERING SITE CONDITIONS (APR 1984)

As prescribed in 36.502, insert the following clause in solicitations and contracts when a fixed-price construction contract or a fixed-price dismantling, demolition, or removal of improvements contract is contemplated and the contract amount is expected to exceed the small purchase limitation. The Contracting Officer may insert the clause in solicitations and contracts when a fixed-price construction or a fixed-price contract for dismantling, demolition, or removal of improvements is contemplated and the contract amount is expected to be within the small purchase limitation.

(a) The Contractor shall promptly, and before the conditions are disturbed, give a written notice to the Contracting Officer of

(1) subsurface or latent physical conditions at the site which differ materially from those indicated in this contract, or

(2) unknown physical conditions at the site, of an unusual nature, which differ materially from those ordinarily encountered and generally recognized as inhering in work of the character provided for in the contract.

(b) The Contracting Officer shall investigate the site conditions promptly after receiving the notice. If the conditions do materially so differ and cause an increase or decrease in the Contractor's cost of, or the time required for, performing any part of the work under this contract, whether or not changed as a result of the conditions, an equitable adjustment shall be made under this clause and the contract modified in writing accordingly.

(c) No request by the Contractor for an equitable adjustment to the contract under this clause shall be allowed, unless the Contractor has given the written notice required; provided, that the time prescribed in (a) above for giving written notice may be extended by the Contracting Officer.

(d) No request by the Contractor for an equitable adjustment to the contract for differing site conditions shall be

allowed if made after final payment under this contract.

(End of clause)

52.236-3 SITE INVESTIGATION AND CONDITIONS AFFECTING THE WORK (APR 1984)

(a) The Contractor acknowledges that it has taken steps reasonably necessary to ascertain the nature and location of the work, and that it has investigated and satisfied itself as to the general and local conditions which can affect the work or its cost, including but not limited to

(1) conditions bearing upon transportation, disposal, handling, and storage of materials ;

(2) the availability of labor, water, electric power, and roads;

(3) uncertainties of weather, river stages, tides, or similar physical conditions at the site;

(4) the conformation and conditions of the ground; and (5) the character of equipment and facilities needed preliminary to and during work performance. The Contractor also acknowledges that it has satisfied itself as to the character, quality, and quantity of surface and subsurface materials or obstacles to be encountered insofar as this information is reasonably ascertainable from an inspection of the site, including all exploratory work done by the Government, as well as from the drawings and specifications made a part of this contract. Any failure of the Contractor to take the actions described and acknowledged in this paragraph will not relieve the Contractor from responsibility for estimating properly the difficulty and cost of successfully performing the work, or for proceeding to successfully perform the work without additional expense to the Government.

(b) The Government assumes no responsibility for any conclusions or interpretations made by the Contractor based on the information made available by the Government. Nor does the Government assume responsibility for any understanding reached or representation made concerning conditions which can affect the work by any of its officers or agents before the execution of this contract, unless that understanding or representation is expressly stated in this contract.

(End of clause)

52.236-5 MATERIAL AND WORKMANSHIP (APR 1984)

(a) All equipment, material, and articles incorporated into the work covered by this contract shall be new and of the most suitable grade for the purpose intended, unless otherwise specifically provided in this contract. References in the specifications to equipment, material, articles, or patented processes by trade name, make, or catalog number, shall be regarded as establishing a standard of quality and shall not be construed as limiting competition. The Contractor may, at its option, use any equipment, material, article, or process that, in the judgment of the Contracting Officer, is equal to that named in the specifications, unless otherwise specifically provided in this contract.

(b) The Contractor shall obtain the Contracting Officer's approval of the machinery and mechanical and other equipment to be incorporated into the work. When requesting approval, the Contractor shall furnish to the Contracting Officer the name of the manufacturer, the model number, and other information concerning the performance, capacity, nature, and rating of the machinery and mechanical and other equipment. When required by this contract or by the Contracting Officer, the Contractor shall also obtain the Contracting Officer's approval of the material or articles which the Contractor contemplates incorporating into the work. When requesting approval, the Contractor shall provide full information concerning the material or articles. When directed to do so, the Contractor

shall submit samples for approval at the Contractor's expense, with all shipping charges prepaid. Machinery, equipment, material, and articles that do not have the required approval shall be installed or used at the risk of subsequent rejection.

(c) All work under this contract shall be performed in a skillful and workmanlike manner. The Contracting Officer may require, in writing, that the Contractor remove from the work any employee the Contracting Officer deems incompetent, careless, or otherwise objectionable.

(End of clause)

52.236-6 SUPERINTENDENCE BY THE CONTRACTOR (APR 1984)

At all times during performance of this contract and until the work is completed and accepted, the Contractor shall directly superintend the work or assign and have on the worksite a competent superintendent who is satisfactory to the Contracting Officer and has authority to act for the Contractor.

(End of clause)

52.236-7 PERMITS AND RESPONSIBILITIES (NOV 1991)

The Contractor shall, without additional expense to the Government, be responsible for obtaining any necessary licenses and permits, and for complying with any Federal, State, and municipal laws, codes, and regulations applicable to the performance of the work. The Contractor shall also be responsible for all damages to persons or property that occur as a result of the Contractor's fault or negligence. The Contractor shall also be responsible for all materials delivered and work performed until completion and acceptance of the entire work, except for any completed unit of work which may have been accepted under the contract.

(End of clause)

52.236-8 OTHER CONTRACTS (APR 1984)

The Government may undertake or award other contracts for additional work at or near the site of the work under this contract. The Contractor shall fully cooperate with the other contractors and with Government employees and shall carefully adapt scheduling and performing the work under this contract to accommodate the additional work, heeding any direction that may be provided by the Contracting Officer. The Contractor shall not commit or permit any act that will interfere with the performance of work by any other contractor or by Government employees.

(End of clause)

52.236-9 PROTECTION OF EXISTING VEGETATION, STRUCTURES, EQUIPMENT, UTILITIES, AND IMPROVEMENTS (APR 1984)

(a) The Contractor shall preserve and protect all structures, equipment, and vegetation (such as trees, shrubs, and grass) on or adjacent to the work site, which are not to be removed and which do not unreasonably interfere with the work required under this contract. The Contractor shall only remove trees when specifically authorized to do so, and

shall avoid damaging vegetation that will remain in place. If any limbs or branches of trees are broken during contract performance, or by the careless operation of equipment, or by workmen, the Contractor shall trim those limbs or branches with a clean cut and paint the cut with a tree-pruning compound as directed by the Contracting Officer.

(b) The Contractor shall protect from damage all existing improvements and utilities

(1) at or near the work site, and

(2) on adjacent property of a third party, the locations of which are made known to or should be known by the Contractor. The Contractor shall repair any damage to those facilities, including those that are the property of a third party, resulting from failure to comply with the requirements of this contract or failure to exercise reasonable care in performing the work. If the Contractor fails or refuses to repair the damage promptly, the Contracting Officer may have the necessary work performed and charge the cost to the Contractor.

(End of clause)

52.236-10 OPERATIONS AND STORAGE AREAS (APR 1984)

(a) The Contractor shall confine all operations (including storage of materials) on Government premises to areas authorized or approved by the Contracting Officer. The Contractor shall hold and save the Government, its officers and agents, free and harmless from liability of any nature occasioned by the Contractor's performance.

(b) Temporary buildings (e.g., storage sheds, shops, offices) and utilities may be erected by the Contractor only with the approval of the Contracting Officer and shall be built with labor and materials furnished by the Contractor without expense to the Government. The temporary buildings and utilities shall remain the property of the Contractor and shall be removed by the Contractor at its expense upon completion of the work. With the written consent of the Contracting Officer, the buildings and utilities may be abandoned and need not be removed.

(c) The Contractor shall, under regulations prescribed by the Contracting Officer, use only established roadways, or use temporary roadways constructed by the Contractor when and as authorized by the Contracting Officer. When materials are transported in prosecuting the work, vehicles shall not be loaded beyond the loading capacity recommended by the manufacturer of the vehicle or prescribed by any Federal, State, or local law or regulation. When it is necessary to cross curbs or sidewalks, the Contractor shall protect them from damage. The Contractor shall repair or pay for the repair of any damaged curbs, sidewalks, or roads.

(End of clause)

52.236-11 USE AND POSSESSION PRIOR TO COMPLETION (APR 1984)

(a) The Government shall have the right to take possession of or use any completed or partially completed part of the work. Before taking possession of or using any work, the Contracting Officer shall furnish the Contractor a list of items of work remaining to be performed or corrected on those portions of the work that the Government intends to take possession of or use. However, failure of the Contracting Officer to list any item of work shall not relieve the Contractor of responsibility for complying with the terms of the contract. The Government's possession or use shall not be deemed an acceptance of any work under the contract.

(b) While the Government has such possession or use, the Contractor shall be relieved of the responsibility for the loss of or damage to the work resulting from the Government's possession or use, notwithstanding the terms of the clause in this contract entitled "Permits and Responsibilities." If prior possession or use by the Government delays

the progress of the work or causes additional expense to the Contractor, an equitable adjustment shall be made in the contract price or the time of completion, and the contract shall be modified in writing accordingly.

(End of clause)

52.236-12 CLEANING UP (APR 1984)

The Contractor shall at all times keep the work area, including storage areas, free from accumulations of waste materials. Before completing the work, the Contractor shall remove from the work and premises any rubbish, tools, scaffolding, equipment, and materials that are not the property of the Government. Upon completing the work, the Contractor shall leave the work area in a clean, neat, and orderly condition satisfactory to the Contracting Officer.

(End of clause)

52.236-13 ACCIDENT PREVENTION (NOV 1991) – ALTERNATE I (NOV 1991)

(a) The Contractor shall provide and maintain work environments and procedures which will

(1) safeguard the public and Government personnel, property, materials, supplies, and equipment exposed to Contractor operations and activities;

(2) avoid interruptions of Government operations and delays in project completion dates; and

(3) control costs in the performance of this contract.

(b) For these purposes on contracts for construction or dismantling, demo lition, or removal of improvements, the Contractor shall-

(1) Provide appropriate safety barricades, signs, and signal lights;

(2) Comply with the standards issued by the Secretary of Labor at 29 CFR Part 1926 and 29 CFR Part 1910; and

(3) Ensure that any additional measures the Contracting Officer determines to be reasonably necessary for the purposes are taken.

(c) If this contract is for construction or dismantling, demolition or removal of improvements with any Department of Defense agency or component, the Contractor shall comply with all pertinent provisions of the latest version of U.S. Army Corps of Engineers Safety and Health Requirements Manual, EM 385-1-1, in effect on the date of the solicitation.

(d) Whenever the Contracting Officer becomes aware of any noncompliance with these requirements or any condition which poses a serious or imminent danger to the health or safety of the public or Government personnel, the Contracting Officer shall notify the Contractor orally, with written confirmation, and request immediate initiation of corrective action. This notice, when delivered to the Contractor or the Contractor's representative at the work site, shall be deemed sufficient notice of the noncompliance and that corrective action is required. After receiving the notice, the Contractor shall immediately take corrective action. If the Contractor fails or refuses to promptly take corrective action, the Contracting Officer may issue an order stopping all or part of the work until satisfactory corrective action has been taken. The Contractor shall not be entitled to any equitable adjustment of the contract price or extension of the performance schedule on any stop work order issued under this clause.

(e) The Contractor shall insert this clause, including this paragraph (e), with appropriate changes in the designation of the parties, in subcontracts.

(f) Before commencing the work, the Contractor shall-

(1) Submit a written proposed plan for implementing this clause. The plan shall include an analysis of the significant hazards to life, limb, and property inherent in contract work performance and a plan for controlling these hazards; and

(2) Meet with representatives of the Contracting Officer to discuss and develop a mutual understanding relative to administration of the overall safety program.

(End of clause)

52.236-15 SCHEDULES FOR CONSTRUCTION CONTRACTS (APR 1984)

(a) The Contractor shall, within five days after the work commences on the contract or another period of time determined by the Contracting Officer, prepare and submit to the Contracting Officer for approval three copies of a practicable schedule showing the order in which the Contractor proposes to perform the work, and the dates on which the Contractor contemplates starting and completing the several salient features of the work (including acquiring materials, plant, and equipment). The schedule shall be in the form of a progress chart of suitable scale to indicate appropriately the percentage of work scheduled for completion by any given date during the period. If the Contractor fails to submit a schedule within the time prescribed, the Contracting Officer may withhold approval of progress payments until the Contractor submits the required schedule.

(b) The Contractor shall enter the actual progress on the chart as directed by the Contracting Officer, and upon doing so shall immediately deliver three copies of the annotated schedule to the Contracting Officer. If, in the opinion of the Contracting Officer, the Contractor falls behind the approved schedule, the Contractor shall take steps necessary to improve its progress, including those that may be required by the Contracting Officer, without additional cost to the Government. In this circumstance, the Contracting Officer may require the Contractor to increase the number of shifts, overtime operations, days of work, and/or the amount of construction plant, and to submit for approval any supplementary schedule or schedules in chart form as the Contracting Officer deems necessary to demonstrate how the approved rate of progress will be regained.

(c) Failure of the Contractor to comply with the requirements of the Contracting Officer under this clause shall be grounds for a determination by the Contracting Officer that the Contractor is not prosecuting the work with sufficient diligence to ensure completion within the time specified in the contract. Upon making this determination, the Contracting Officer may terminate the Contractor's right to proceed with the work, or any separable part of it, in accordance with the default terms of this contract.

(End of clause)

52.236-17 LAYOUT OF WORK (APR 1984)

The Contractor shall lay out its work from Government established base lines and bench marks indicated on the drawings, and shall be responsible for all measurements in connection with the layout. The Contractor shall furnish, at its own expense, all stakes, templates, platforms, equipment, tools, materials, and labor required to lay out any part of the work. The Contractor shall be responsible for executing the work to the lines and grades that may be established or indicated by the Contracting Officer. The Contractor shall also be responsible for maintaining and

preserving all stakes and other marks established by the Contracting Officer until authorized to remove them. If such marks are destroyed by the Contractor or through its negligence before their removal is authorized, the Contracting Officer may replace them and deduct the expense of the replacement from any amounts due or to become due to the Contractor.

(End of clause)

52.236-21 SPECIFICATIONS AND DRAWINGS FOR CONSTRUCTION (FEB 1997)

(a) The Contractor shall keep on the work site a copy of the drawings and specifications and shall at all times give the Contracting Officer access thereto. Anything mentioned in the specifications and not shown on the drawings, or shown on the drawings and not mentioned in the specifications, shall be of like effect as if shown or mentioned in both. In case of difference between drawings and specifications, the specifications shall govern. In case of discrepancy in the figures, in the drawings, or in the specifications, the matter shall be promptly submitted to the Contracting Officer, who shall promptly make a determination in writing. Any adjustment by the Contractor without such a determination shall be at its own risk and expense. The Contracting Officer shall furnish from time to time such detailed drawings and other information as considered necessary, unless otherwise provided.

(b) Wherever in the specifications or upon the drawings the words "directed", "required", "ordered", "designated", "prescribed", or words of like import are used, it shall be understood that the "direction", "requirement", "order", "designation", or "prescription", of the Contracting Officer is intended and similarly the words "approved", "acceptable", "satisfactory", or words of like import shall mean "approved by," or "acceptable to", or "satisfactory to" the Contracting Officer, unless otherwise expressly stated.

(c) Where "as shown," as indicated", "as detailed", or words of similar import are used, it shall be understood that the reference is made to the drawings accompanying this contract unless stated otherwise. The word "provided" as used herein shall be understood to mean "provide complete in place," that is "furnished and installed".

(d) Shop drawings means drawings, submitted to the Government by the Contractor, subcontractor, or any lower tier subcontractor pursuant to a construction contract, showing in detail (1) the proposed fabrication and assembly of structural elements, and (2) the installation (i.e., fit, and attachment details) of materials or equipment. It includes drawings, diagrams, layouts, schematics, descriptive literature, illustrations, schedules, performance and test data, and similar materials furnished by the contractor to explain in detail specific portions of the work required by the contract. The Government may duplicate, use, and disclose in any manner and for any purpose shop drawings delivered under this contract.

(e) If this contract requires shop drawings, the Contractor shall coordinate all such drawings, and review them for accuracy, completeness, and compliance with contract requirements and shall indicate its approval thereon as evidence of such coordination and review. Shop drawings submitted to the Contracting Officer without evidence of the Contractor's approval may be returned for resubmission. The Contracting Officer will indicate an approval or disapproval of the shop drawings and if not approved as submitted shall indicate the Government's reasons therefor. Any work done before such approval shall be at the Contractor's risk. Approval by the Contracting Officer shall not relieve the Contractor from responsibility for any errors or omissions in such drawings, nor from responsibility for complying with the requirements of this contract, except with respect to variations described and approved in accordance with (f) below.

(f) If shop drawings show variations from the contract requirements, the Contractor shall describe such variations in writing, separate from the drawings, at the time of submission. If the Contracting Officer approves any such variation, the Contracting Officer shall issue an appropriate contract modification, except that, if the variation is minor or does not involve a change in price or in time of performance, a modification need not be issued.

(g) The Contractor shall submit to the Contracting Officer for approval four copies (unless otherwise indicated) of all shop drawings as called for under the various headings of these specifications. Three sets (unless otherwise indicated) of all shop drawings, will be retained by the Contracting Officer and one set will be returned to the Contractor.

(End of clause)

52.236-26 PRECONSTRUCTION CONFERENCE (FEB 1995)

If the Contracting Officer decides to conduct a preconstruction conference, the successful offeror will be notified and will be required to attend. The Contracting Officer's notification will include specific details regarding the date, time, and location of the conference, any need for attendance by subcontractors, and information regarding the items to be discussed.

(End of clause)

52.239-4001 Year 2000 Compliance

The contractor shall ensure products provided under this contract, to include hardware, software, firmware, and middleware, whether acting alone or combined as a system, are Year 2000 compliant as defined as follows: Year 2000 compliant means with respect to information technology, that the information technology accurately processes date/time data (including, but not limited to, calculating, comparing, and sequencing) from, into, and between the twentieth and twenty-first centuries, and the years 1999 and 2000 and leap year calculations, to the extent that other information, used in combination with the information technology being acquired, properly exchanges date/time data with it.

52.239-4005 Year 2000 Compliance - Construction Contracts

a. In accordance with FAR 39.106, the contractor shall ensure that with respect to any design, construction, goods, or services under this contract as well as any subsequent task/delivery orders issued under this contract (if applicable), all information technology contained therein shall be Year 2000 compliant. Specifically:

The contractor shall:

(1) Perform, maintain, and provide an inventory of all major components to include structures, equipment, items, parts, and furnishings under this contract and each task/delivery order which may be affected by the Y2K compliance requirement.

(2) Indicate whether each component is currently Year 2000 compliant or requires an upgrade for compliance prior to government acceptance.

(End of Clause)

52.239-4006 Security Contract Language for all Corps of Engineers' Unclassified Contracts (PIL 2003-06, 19 Feb 03)

All Contractor employees (U.S. citizens and Non- U.S. citizens) working under this contract (to include grants, cooperative agreements and task orders) who require access to Automated Information Systems (AIS), (stand alone computers, network computers/systems, e-mail) shall, at a minimum, be designated into an ADP-III position (non-sensitive) in accordance with DoD 5220-22-R, Industrial Security Regulation. The investigative requirements for an ADP-III position are a favorable National Agency Check (NAC), SF-85P, Public Trust Position. The contractor shall have each applicable employee complete a SF-85P and submit to the USACE, Savannah District Security Officer, ATTN: CESAS-SL, 100 West Oglethorpe Avenue, Savannah, GA 31401 within three (3) working days after award of any contract or task order, and shall be submitted prior to the individual being permitted access to an AIS. Contractors who have a commercial or government entity (CAGE) Code and Facility Security Clearance through the Defense Security Service shall process the NACs and forward visit requests/results of NAC to the Savannah District Security Officer (address above). For those contractors who do not have a CAGE Code or Facility Security Clearance, the Savannah District Security Office will process the investigation in coordination with the Contractor and contract employees.

In accordance with Engineering Regulation, ER 380-1-18, Section 4, foreign nationals who work on Corps of Engineers' contracts or task orders shall be approved by the HQUSACE Foreign Disclosure Officer or higher before beginning work on the contract/task order. This regulation includes subcontractor employees. (NOTE: exceptions to the above requirement include foreign nationals who perform janitorial and/or ground maintenance services.) The contractor shall submit to the Division/District Contract Office, the names of all foreign nationals proposed for performance under this contract/task order, along with documentation to verify that he/she was legally admitted into the United States and has authority to work and/or go to school in the US. Such documentation may include a US passport, Certificate of US citizenship (INS Form N-560 or N-561), Certificate of Naturalization (INS Form N-550 or N-570), foreign passport with I-551 stamp or attached INS Form I-94 indicating employment authorization, Alien Registration Receipt Card with photograph (INS Form I-151 or I-551), Temporary Resident Card (INS Form I-688), Employment Authorization Card (INS Form I-688A), Reentry Permit (INS Form I-327), Refugee Travel Document (INS Form I-571), Employment Authorization Document issued by the INS which contains a photograph (INS Form I-688B).

Classified contracts require the issuance of a DD Form 254 (Department of Defense Contract Security Classification Specification).

52.242-13 BANKRUPTCY (JUL 1995)

In the event the Contractor enters into proceedings relating to bankruptcy, whether voluntary or involuntary, the

Contractor agrees to furnish, by certified mail or electronic commerce method authorized by the contract, written notification of the bankruptcy to the Contracting Officer responsible for administering the contract. This notification shall be furnished within five days of the initiation of the proceedings relating to bankruptcy filing. This notification shall include the date on which the bankruptcy petition was filed, the identity of the court in which the bankruptcy petition was filed, and a listing of Government contract numbers and contracting offices for all Government contracts against which final payment has not been made. This obligation remains in effect until final payment under this contract.

(End of clause)

52.242-14 SUSPENSION OF WORK (APR 1984)

(a) The Contracting Officer may order the Contractor, in writing, to suspend, delay, or interrupt all or any part of the work of this contract for the period of time that the Contracting Officer determines appropriate for the convenience of the Government.

(b) If the performance of all or any part of the work is, for an unreasonable period of time, suspended, delayed, or interrupted (1) by an act of the Contracting Officer in the administration of this contract, or (2) by the Contracting Officer's failure to act within the time specified in this contract (or within a reasonable time if not specified), an adjustment shall be made for any increase in the cost of performance of this contract (excluding profit) necessarily caused by the unreasonable suspension, delay, or interruption, and the contract modified in writing accordingly. However, no adjustment shall be made under this clause for any suspension, delay, or interruption to the extent that performance would have been so suspended, delayed, or interrupted by any other cause, including the fault or negligence of the Contractor, or for which an equitable adjustment is provided for or excluded under any other term or condition of this contract. (c) A claim under this clause shall not be allowed (1) for any costs incurred more than 20 days before the Contractor shall have notified the Contracting Officer in writing of the act or failure to act involved (but this requirement shall not apply as to a claim resulting from a suspension order), and (2) unless the claim, in an amount stated, is asserted in writing as soon as practicable after the termination of the suspension, delay, or interruption, but not later than the date of final payment under the contract.

(End of clause)

52.243-4 CHANGES (AUG 1987)

(a) The Contracting Officer may, at any time, without notice to the sureties, if any, by written order designated or indicated to be a change order, make changes in the work within the general scope of the contract, including changes--

(1) In the specifications (including drawings and designs);

(2) In the method or manner of performance of the work;

(3) In the Government-furnished facilities, equipment, materials, services, or site; or

(4) Directing acceleration in the performance of the work.

(b) Any other written or oral order (which, as used in this paragraph (b), includes direction, instruction, interpretation, or determination) from the Contracting Officer that causes a change shall be treated as a change order under this clause; provided, that the Contractor gives the Contracting Officer written notice stating

(1) the date, circumstances, and source of the order and

(2) that the Contractor regards the order as a change order.

(c) Except as provided in this clause, no order, statement, or conduct of the Contracting Officer shall be treated as a change under this clause or entitle the Contractor to an equitable adjustment.

(d) If any change under this clause causes an increase or decrease in the Contractor's cost of, or the time required for, the performance of any part of the work under this contract, whether or not changed by any such order, the Contracting Officer shall make an equitable adjustment and modify the contract in writing. However, except for an adjustment based on defective specifications, no adjustment for any change under paragraph (b) of this clause shall be made for any costs incurred more than 20 days before the Contractor gives written notice as required. In the case of defective specifications for which the Government is responsible, the equitable adjustment shall include any increased cost reasonably incurred by the Contractor in attempting to comply with the defective specifications.

(e) The Contractor must assert its right to an adjustment under this clause within 30 days after

(1) receipt of a written change order under paragraph (a) of this clause or (2) the furnishing of a written notice under paragraph (b) of this clause, by submitting to the Contracting Officer a written statement describing the general nature and amount of the proposal, unless this period is extended by the Government. The statement of proposal for adjustment may be included in the notice under paragraph (b) above.

(f) No proposal by the Contractor for an equitable adjustment shall be allowed if asserted after final payment under this contract.

(End of clause)

52.243-5 CHANGES AND CHANGED CONDITIONS (APR 1984)

(a) The Contracting Officer may, in writing, order changes in the drawings and specifications within the general scope of the contract.

(b) The Contractor shall promptly notify the Contracting Officer, in writing, of subsurface or latent physical conditions differing materially from those indicated in this contract or unknown unusual physical conditions at the site before proceeding with the work.

(c) If changes under paragraph (a) or conditions under paragraph (b) increase or decrease the cost of, or time required for performing the work, the Contracting Officer shall make an equitable adjustment (see paragraph (d)) upon submittal of a "proposal for adjustment" (hereafter referred to as proposal) by the Contractor before final payment under the contract.

(d) The Contracting Officer shall not make an equitable adjustment under paragraph (b) unless--

(1) The Contractor has submitted and the Contracting Officer has received the required written notice; or

(2) The Contracting Officer waives the requirement for the written notice.

(e) Failure to agree to any adjustment shall be a dispute under the Disputes clause.

(End of clause)

52.244-5 COMPETITION IN SUBCONTRACTING (DEC 1996)

(a) The Contractor shall select subcontractors (including suppliers) on a competitive basis to the maximum practical extent consistent with the objectives and requirements of the contract.

(b) If the Contractor is an approved mentor under the Department of Defense Pilot Mentor-Protege Program (Pub. L. 101–510, section 831 as amended), the Contractor may award subcontracts under this contract on a noncompetitive basis to its proteges.

(End of clause)

52.248-3 VALUE ENGINEERING--CONSTRUCTION (FEB 2000)

(a) General. The Contractor is encouraged to develop, prepare, and submit value engineering change proposals (VECP's) voluntarily. The Contractor shall share in any instant contract savings realized from accepted VECP's, in accordance with paragraph (f) below.

(b) Definitions. "Collateral costs," as used in this clause, means agency costs of operation, maintenance, logistic support, or Government-furnished property.

"Collateral savings," as used in this clause, means those measurable net reductions resulting from a VECP in the agency's overall projected collateral costs, exclusive of acquisition savings, whether or not the acquisition cost changes.

"Contractor's development and implementation costs," as used in this clause, means those costs the Contractor incurs on a VECP specifically in developing, testing, preparing, and submitting the VECP, as well as those costs the Contractor incurs to make the contractual changes required by Government acceptance of a VECP.

"Government costs," as used in this clause, means those agency costs that result directly from developing and implementing the VECP, such as any net increases in the cost of testing, operations, maintenance, and logistic support. The term does not include the normal administrative costs of processing the VECP.

"Instant contract savings," as used in this clause, means the estimated reduction in Contractor cost of performance resulting from acceptance of the VECP, minus allowable Contractor's development and implementation costs, including subcontractors' development and implementation costs (see paragraph (h) below).

"Value engineering change proposal (VECP)" means a proposal that--

(1) Requires a change to this, the instant contract, to implement; and

(2) Results in reducing the contract price or estimated cost without impairing essential functions or characteristics; provided, that it does not involve a change--

(i) In deliverable end item quantities only; or

(ii) To the contract type only.

(c) VECP preparation. As a minimum, the Contractor shall include in each VECP the information described in subparagraphs (1) through (7) below. If the proposed change is affected by contractually required configuration

management or similar procedures, the instructions in those procedures relating to format, identification, and priority assignment shall govern VECP preparation. The VECP shall include the following:

(1) A description of the difference between the existing contract requirement and that proposed, the comparative advantages and disadvantages of each, a justification when an item's function or characteristics are being altered, and the effect of the change on the end item's performance.

(2) A list and analysis of the contract requirements that must be changed if the VECP is accepted, including any suggested specification revisions.

(3) A separate, detailed cost estimate for

(i) the affected portions of the existing contract requirement and

(ii) the VECP. The cost reduction associated with the VECP shall take into account the Contractor's allowable development and implementation costs, including any amount attributable to subcontracts under paragraph (h) below.

(4) A description and estimate of costs the Government may incur in implementing the VECP, such as test and evaluation and operating and support costs.

(5) A prediction of any effects the proposed change would have on collateral costs to the agency.

(6) A statement of the time by which a contract modification accepting the VECP must be issued in order to achieve the maximum cost reduction, noting any effect on the contract completion time or delivery schedule.

(7) Identification of any previous submissions of the VECP, including the dates submitted, the agencies and contract numbers involved, and previous Government actions, if known.

(d) Submission. The Contractor shall submit VECP's to the Resident Engineer at the worksite, with a copy to the Contracting Officer.

(e) Government action.

(1) The Contracting Officer will notify the Contractor of the status of the VECP within 45 calendar days after the contracting office receives it. If additional time is required, the Contracting Officer will notify the Contractor within the 45-day period and provide the reason for the delay and the expected date of the decision. The Government will process VECP's expeditiously; however, it shall not be liable for any delay in acting upon a VECP.

If the VECP is not accepted, the Contracting Officer will notify the Contractor in writing, explaining the reasons for rejection. The Contractor may withdraw any VECP, in whole or in part, at any time before it is accepted by the Government. The Contracting Officer may require that the Contractor provide written notification before undertaking significant expenditures for VECP effort.

Any VECP may be accepted, in whole or in part, by the Contracting Officer's award of a modification to this contract citing this clause. The Contracting Officer may accept the VECP, even though an agreement on price reduction has not been reached, by issuing the Contractor a notice to proceed with the change. Until a notice to proceed is issued or a contract modification applies a VECP to this contract, the Contractor shall perform in accordance with the existing contract. The decision to accept or reject all or part of any VECP is a unilateral decision made solely at the discretion of the Contracting Officer.

(f) Sharing.

(1) Rates. The Government's share of savings is determined by subtracting Government costs from instant contract savings and multiplying the result by

(i) 45 percent for fixed-price contracts or

(ii) 75 percent for cost-reimbursement contracts.

(2) Payment. Payment of any share due the Contractor for use of a VECP on this contract shall be authorized by a modification to this contract to--

(i) Accept the VECP;

(ii) Reduce the contract price or estimated cost by the amount of instant contract savings; and

(iii) Provide the Contractor's share of savings by adding the amount calculated to the contract price or fee.

(g) Collateral savings. If a VECP is accepted, the Contracting Officer will increase the instant contract amount by 20 percent of any projected collateral savings determined to be realized in a typical year of use after subtracting any Government costs not previously offset. However, the Contractor's share of collateral savings will not exceed the contract's firm-fixed-price or estimated cost, at the time the VECP is accepted, or $100,000, whichever is greater. The Contracting Officer is the sole determiner of the amount of collateral savings.

(h) Subcontracts. The Contractor shall include an appropriate value engineering clause in any subcontract of $50,000 or more and may include one in subcontracts of lesser value. In computing any adjustment in this contract's price under paragraph (f) above, the Contractor's allowable development and implementation costs shall include any subcontractor's allowable development and implementation costs clearly resulting from a VECP accepted by the Government under this contract, but shall exclude any value engineering incentive payments to a subcontractor. The Contractor may choose any arrangement for subcontractor value engineering incentive payments; provided, that these payments shall not reduce the Government's share of the savings resulting from the VECP.

(i) Data. The Contractor may restrict the Government's right to use any part of a VECP or the supporting data by marking the following legend on the affected parts:

"These data, furnished under the Value Engineering-- Construction clause of contract . . . . . , shall not be disclosed outside the Government or duplicated, used, or disclosed, in whole or in part, for any purpose other than to evaluate a value engineering change proposal submitted under the clause. This restriction does not limit the Government's right to use information contained in these data if it has been obtained or is otherwise available from the Contractor or from another source without limitations." If a VECP is accepted, the Contractor hereby grants the Government unlimited rights in the VECP and supporting data, except that, with respect to data qualifying and submitted as limited rights technical data, the Government shall have the rights specified in the contract modification implementing the VECP and shall appropriately mark the data. (The terms "unlimited rights" and "limited rights" are defined in Part 27 of the Federal Acquisition Regulation.)

(End of clause)

52.249-2 TERMINATION FOR CONVENIENCE OF THE GOVERNMENT (FIXED-PRICE) (SEP 1996) - ALTERNATE I (SEP 1996)

(a) The Government may terminate performance of work under this contract in whole or, from time to time, in part if the Contracting Officer determines that a termination is in the Government's interest. The Contracting Officer shall terminate by delivering to the Contractor a Notice of Termination specifying the extent of termination and the effective date.

(b) After receipt of a Notice of Termination, and except as directed by the Contracting Officer, the Contractor shall immediately proceed with the following obligations, regardless of any delay in determining or adjusting any amounts due under this clause:

(1) Stop work as specified in the notice.

(2) Place no further subcontracts or orders (referred to as subcontracts in this clause) for materials, services, or facilities, except as necessary to complete the continued portion of the contract.

(3) Terminate all subcontracts to the extent they relate to the work terminated.

(4) Assign to the Government, as directed by the Contracting Officer, all right, title, and interest of the Contractor under the subcontracts terminated, in which case the Government shall have the right to settle or to pay any termination settlement proposal arising out of those terminations.

(5) With approval or ratification to the extent required by the Contracting Officer, settle all outstanding liabilities and termination settlement proposals arising from the termination of subcontracts; the approval or ratification will be final for purposes of this clause.

(6) As directed by the Contracting Officer, transfer title and deliver to the Government (i) the fabricated or unfabricated parts, work in process, completed work, supplies, and other material produced or acquired for the work terminated, and (ii) the completed or partially completed plans, drawings, information, and other property that, if the contract had been completed, would be required to be furnished to the Government.

(7) Complete performance of the work not terminated.

(8) Take any action that may be necessary, or that the Contracting Officer may direct, for the protection and preservation of the property related to this contract that is in the possession of the Contractor and in which the Government has or may acquire an interest.

(9) Use its best efforts to sell, as directed or authorized by the Contracting Officer, any property of the types referred to in subparagraph (b)(6) of this clause; provided, however, that the Contractor (i) is not required to extend credit to any purchaser and (ii) may acquire the property under the conditions prescribed by, and at prices approved by, the Contracting Officer. The proceeds of any transfer or disposition will be applied to reduce any payments to be made by the Government under this contract, credited to the price or cost of the work, or paid in any other manner directed by the Contracting Officer.

(c) The Contractor shall submit complete termination inventory schedules no later than 120 days from the effective date of termination, unless extended in writing by the Contracting Officer upon written request of the Contractor within this 120-day period.

(d) After expiration of the plant clearance period as defined in Subpart 45.6 of the Federal Acquisition Regulation, the Contractor may submit to the Contracting Officer a list, certified as to quantity and quality, of termination inventory not previously disposed of, excluding items authorized for disposition by the Contracting Officer. The Contractor may request the Government to remove those items or enter into an agreement for their storage. Within 15 days, the Government will accept title to those items and remove them or enter into a storage agreement. The Contracting Officer may verify the list upon removal of the items, or if stored, within 45 days from submission of the list, and shall correct the list, as necessary, before final settlement.

(e) After termination, the Contractor shall submit a final termination settlement proposal to the Contracting Officer in the form and with the certification prescribed by the Contracting Officer. The Contractor shall submit the proposal promptly, but no later than 1 year from the effective date of termination, unless extended in writing by the Contracting

Officer upon written request of the Contractor within this 1-year period. However, if the Contracting Officer determines that the facts justify it, a termination settlement proposal may be received and acted on after 1 year or any extension. If the Contractor fails to submit the proposal within the time allowed, the Contracting Officer may determine, on the basis of information available, the amount, if any, due the Contractor because of the termination and shall pay the amount determined.

(f) Subject to paragraph (e) of this clause, the Contractor and the Contracting Officer may agree upon the whole or any part of the amount to be paid or remaining to be paid because of the termination. The amount may include a reasonable allowance for profit on work done. However, the agreed amount, whether under this paragraph (g) or paragraph (g) of this clause, exclusive of costs shown in subparagraph (g)(3) of this clause, may not exceed the total contract price as reduced by (1) the amount of payments previously made and (2) the contract price of work not terminated. The contract shall be modified, and the Contractor paid the agreed amount. Paragraph (g) of this clause shall not limit, restrict, or affect the amount that may be agreed upon to be paid under this paragraph.

(g) If the Contractor and Contracting Officer fail to agree on the whole amount to be paid the Contractor because of the termination of work, the Contracting Officer shall pay the Contractor the amounts determined as follows, but without duplication of any amounts agreed upon under paragraph (f) of this clause:

(1) For contract work performed before the effective date of termination, the total (without duplication of any items) of--

(i) The cost of this work;

(ii) The cost of settling and paying termination settlement proposals under terminated subcontracts that are properly chargeable to the terminated portion of the contract if not included in subdivision (g)(1)(i) of this clause; and

(iii) A sum, as profit on subdivision (g)(1)(i) of this clause, determined by the Contracting Officer under 49.202 of the Federal Acquisition Regulation, in effect on the date of this contract, to be fair and reasonable; however, if it appears that the Contractor would have sustained a loss on the entire contract had it been completed, the Contracting Officer shall allow no profit under this subdivision (iii) and shall reduce the settlement to reflect the indicated rate of loss.

(2) The reasonable costs of settlement of the work terminated, including--

(i) Accounting, legal, clerical, and other expenses reasonably necessary for the preparation of termination settlement proposals and supporting data;

(ii) The termination and settlement of subcontracts (excluding the amounts of such settlements); and

(iii) Storage, transportation, and other costs incurred, reasonably necessary for the preservation, protection, or disposition of the termination inventory.

(h) Except for normal spoilage, and except to the extent that the Government expressly assumed the risk of loss, the Contracting Officer shall exclude from the amounts payable to the Contractor under paragraph (g) of this clause, the fair value, as determined by the Contracting Officer, of property that is destroyed, lost, stolen, or damaged so as to become undeliverable to the Government or to a buyer.

(i) The cost principles and procedures of Part 31 of the Federal Acquisition Regulation, in effect on the date of this contract, shall govern all costs claimed, agreed to, or determined under this clause.

(j) The Contractor shall have the right of appeal, under the Disputes clause, from any determination made by the Contracting Officer under paragraph (e), (g), or (l) of this clause, except that if the Contractor failed to submit the termination settlement proposal or request for equitable adjustment within the time provided in paragraph (e) or (l), respectively, and failed to request a time extension, there is no right of appeal.

(k) In arriving at the amount due the Contractor under this clause, there shall be deducted--

(1) All unliquidated advance or other payments to the Contractor under the terminated portion of this contract;

(2) Any claim which the Government has against the Contractor under this contract; and

(3) The agreed price for, or the proceeds of sale of, materials, supplies, or other things acquired by the Contractor or sold under the provisions of this clause and not recovered by or credited to the Government.

(l) If the termination is partial, the Contractor may file a proposal with the Contracting Officer for an equitable adjustment of the price(s) of the continued portion of the contract. The Contracting Officer shall make any equitable adjustment agreed upon. Any proposal by the Contractor for an equitable adjustment under this clause shall be requested within 90 days from the effective date of termination unless extended in writing by the Contracting Officer.

(m)(1) The Government may, under the terms and conditions it prescribes, make partial payments and payments against costs incurred by the Contractor for the terminated portion of the contract, if the Contracting Officer believes the total of these payments will not exceed the amount to which the Contractor will be entitled.

(2) If the total payments exceed the amount finally determined to be due, the Contractor shall repay the excess to the Government upon demand, together with interest computed at the rate established by the Secretary of the Treasury under 50 U.S.C. App. 1215(b)(2). Interest shall be computed for the period from the date the excess payment is received by the Contractor to the date the excess is repaid. Interest shall not be charged on any excess payment due to a reduction in the Contractor's termination settlement proposal because of retention or other disposition of termination inventory until 10 days after the date of the retention or disposition, or a later date determined by the Contracting Officer because of the circumstances.

(n) Unless otherwise provided in this contract or by statute, the Contractor shall maintain all records and documents relating to the terminated portion of this contract for 3 years after final settlement. This includes all books and other evidence bearing on the Contractor's costs and expenses under this contract. The Contractor shall make these records and documents available to the Government, at the Contractor's office, at all reasonable times, without any direct charge. If approved by the Contracting Officer, photographs, microphotographs, or other authentic reproductions may be maintained instead of original records and documents.

(End of clause)

52.249-10 DEFAULT (FIXED-PRICE CONSTRUCTION) (APR 1984)

(a) If the Contractor refuses or fails to prosecute the work or any separable part, with the diligence that will insure its completion within the time specified in this contract including any extension, or fails to complete the work within this time, the Government may, by written notice to the Contractor, terminate the right to proceed with the work (or the separable part of the work) that has been delayed. In this event, the Government may take over the work and complete it by contract or otherwise, and may take possession of and use any materials, appliances, and plant on the work site necessary for completing the work. The Contractor and its sureties shall be liable for any damage to the Government resulting from the Contractor's refusal or failure to complete the work within the specified time, whether or not the Contractor's right to proceed with the work is terminated. This liability includes any increased costs incurred by the Government in completing the work.

(b) The Contractor's right to proceed shall not be terminated nor the Contractor charged with damages under this clause, if--

(1) The delay in completing the work arises from unforeseeable causes beyond the control and without the fault or negligence of the Contractor. Examples of such causes include

(i) acts of God or of the public enemy,

(ii) acts of the Government in either its sovereign or contractual capacity,

(iii) acts of another Contractor in the performance of a contract with the Government,

(iv) fires,

(v) floods,

(vi) epidemics,

(vii) quarantine restrictions,

(viii) strikes,

(ix) freight embargoes,

(x) unusually severe weather, or delays of subcontractors or suppliers at any tier arising from unforeseeable causes beyond the control and without the fault or negligence of both the Contractor and the subcontractors or suppliers; and

(2) The Contractor, within 10 days from the beginning of any delay (unless extended by the Contracting Officer), notifies the Contracting Officer in writing of the causes of delay. The Contracting Officer shall ascertain the facts and the extent of delay. If, in the judgment of the Contracting Officer, the findings of fact warrant such action, the time for completing the work shall be extended. The findings of the Contracting Officer shall be final and conclusive on the parties, but subject to appeal under the Disputes clause.

(c) If, after termination of the Contractor's right to proceed, it is determined that the Contractor was not in default, or that the delay was excusable, the rights and obligations of the parties will be the same as if the termination had been issued for the convenience of the Government.

The rights and remedies of the Government in this clause are in addition to any other rights and remedies provided by law or under this contract.

(End of clause)

52.253-1 COMPUTER GENERATED FORMS (JAN 1991)

(a) Any data required to be submitted on a Standard or Optional Form prescribed by the Federal Acquisition Regulation (FAR) may be submitted on a computer generated version of the form, provided there is no change to the name, content, or sequence of the data elements on the form, and provided the form carries the Standard or Optional Form number and edition date.

(b) Unless prohibited by agency regulations, any data required to be submitted on an agency unique form prescribed by an agency supplement to the FAR may be submitted on a computer generated version of the form provided there is no change to the name, content, or sequence of the data elements on the form and provided the form carries the agency form number and edition date.

(c) If the Contractor submits a computer generated version of a form that is different than the required form, then the rights and obligations of the parties will be determined based on the content of the required form.

(End of clause)

252.201-7000 CONTRACTING OFFICER'S REPRESENTATIVE (DEC 1991)

(a) "Definition. Contracting officer's representative" means an individual designated in accordance with subsection 201.602-2 of the Defense Federal Acquisition Regulation Supplement and authorized in writing by the contracting officer to perform specific technical or administrative functions.

(b) If the Contracting Officer designates a contracting officer's representative (COR), the Contractor will receive a copy of the written designation. It will specify the extent of the COR's authority to act on behalf of the contracting officer. The COR is not authorized to make any commitments or changes that will affect price, quality, quantity, delivery, or any other term or condition of the contract.

(End of clause)

252.203-7001 PROHIBITION ON PERSONS CONVICTED OF FRAUD OR OTHER DEFENSE-CONTRACT-RELATED FELONIES (MAR 1999)

(a) Definitions. As used in this clause—

(1) “Arising out of a contract with the DoD” means any act in connection with—

(i) Attempting to obtain;

(ii) Obtaining, or

(iii) Performing a contract or first-tier subcontract of any agency, department, or component of the Department of Defense (DoD).

(2) “Conviction of fraud or any other felony” means any conviction for fraud or a felony in violation of state or Federal criminal statutes, whether entered on a verdict or plea, including a plea of *nolo contendere*, for which sentence has been imposed.

(3) “Date of conviction” means the date judgment was entered against the individual.

(b) Any individual who is convicted after September 29, 1988, of fraud or any other felony arising out of a contract with the DoD is prohibited from serving--

(1) In a management or supervisory capacity on any DoD contract or first-tier subcontract;

(2) On the board of directors of any DoD contractor or first-tier subcontractor;

(3) As a consultant, agent, or representative for any DoD contractor or first-tier subcontractor; or

(4) In any other capacity with the authority to influence, advise, or control the decisions of any DoD contractor or subcontractor with regard to any DoD contract or first-tier subcontract.

(c) Unless waived, the prohibition in paragraph (b) of this clause applies for not less than 5 years from the date of conviction.

(d) 10 U.S.C. 2408 provides that a defense contractor or first-tier subcontractor shall be subject to a criminal penalty of not more than $500,000 if convicted of knowingly—

(1) Employing a person under a prohibition specified in paragraph (b) of this clause; or

(2) Allowing such a person to serve on the board of directors of the contractor or first-tier subcontractor.

(e) In addition to the criminal penalties contained in 10 U.S.C. 2408, the Government may consider other available remedies, such as—

(1) Suspension or debarment;

(2) Cancellation of the contract at no cost to the Government; or

(3) Termination of the contract for default.

(f) The Contractor may submit written requests for waiver of the prohibition in paragraph (b) of this clause to the Contracting Officer. Requests shall clearly identify—

(1) The person involved;

(2) The nature of the conviction and resultant sentence or punishment imposed;

(3) The reasons for the requested waiver; and

(4) An explanation of why a waiver is in the interest of national security.

(g) The Contractor agrees to include the substance of this clause, appropriately modified to reflect the identity and relationship of the parties, in all first-tier subcontracts exceeding the simplified acquisition threshold in Part 2 of the Federal Acquisition Regulation, except those for commercial items or components.

(h) Pursuant to 10 U.S.C. 2408(c), defense contractors and subcontractors may obtain information as to whether a particular person has been convicted of fraud or any other felony arising out of a contract with the DoD by contacting The Office of Justice Programs, The Denial of Federal Benefits Office, U.S. Department of Justice, telephone (202) 616-3507.

(End of clause)

252.203-7002 DISPLAY OF DOD HOTLINE POSTER (DEC 1991)

(a) The Contractor shall display prominently in common work areas within business segments performing work under Department of Defense (DoD) contracts, DoD Hotline Posters prepared by the DoD Office of the Inspector General.

(b) DoD Hotline Posters may be obtained from the DoD Inspector General, ATTN: Defense Hotline, 400 Army Navy Drive, Washington, DC 22202-2884.

(xi) The Contractor need not comply with paragraph (a) of this clause if it has established a mechanism, such as a

hotline, by which employees may report suspected instances of improper conduct, and instructions that encourage employees to make such reports.

(End of clause)

252.204-7000 DISCLOSURE OF INFORMATION (DEC 1991)

(a) The Contractor shall not release to anyone outside the Contractor's organization any unclassified information, regardless of medium (e.g., film, tape, document), pertaining to any part of this contract or any program related to this contract, unless--

(1) The Contracting Officer has given prior written approval; or

(2) The information is otherwise in the public domain before the date of release.

(b) Requests for approval shall identify the specific information to be released, the medium to be used, and the purpose for the release. The Contractor shall submit its request to the Contracting Officer at least 45 days before the proposed date for release.

(c) The Contractor agrees to include a similar requirement in each subcontract under this contract. Subcontractors shall submit requests for authorization to release through the prime contractor to the Contracting Officer.

(End of clause)

252.204-7003 CONTROL OF GOVERNMENT PERSONNEL WORK PRODUCT (APR 1992)

The Contractor's procedures for protecting against unauthorized disclosure of information shall not require Department of Defense employees or members of the Armed Forces to relinquish control of their work products, whether classified or not, to the contractor.

(End of clause)

252.204-7004 REQUIRED CENTRAL CONTRACTOR REGISTRATION (NOV 2001)

(a) Definitions.

As used in this clause--

(1) Central Contractor Registration (CCR) database means the primary DoD repository for contractor information required for the conduct of business with DoD.

(2) Data Universal Numbering System (DUNS) number means the 9-digit number assigned by Dun and Bradstreet Information Services to identify unique business entities.

(3) Data Universal Numbering System +4 (DUNS+4) number means the DUNS number assigned by Dun and Bradstreet plus a 4-digit suffix that may be assigned by a parent (controlling) business concern. This 4-digit suffix may be assigned at the discretion of the parent business concern for such purposes as identifying subunits or affiliates of the parent business concern.

(4) Registered in the CCR database means that all mandatory information, including the DUNS number or the DUNS+4 number, if applicable, and the corresponding Commercial and Government Entity (CAGE) code, is in the CCR database; the DUNS number and the CAGE code have been validated; and all edits have been successfully completed.

(b)(1) By submission of an offer, the offeror acknowledges the requirement that a prospective awardee must be registered in the CCR database prior to award, during performance, and through final payment of any contract resulting from this solicitation, except for awards to foreign vendors for work to be performed outside the United States.

(2) The offeror shall provide its DUNS or, if applicable, its DUNS+4 number with its offer, which will be used by the Contracting Officer to verify that the offeror is registered in the CCR database.

(3) Lack of registration in the CCR database will make an offeror ineligible for award.

(4) DoD has established a goal of registering an applicant in the CCR database within 48 hours after receipt of a complete and accurate application via the Internet. However, registration of an applicant submitting an application through a method other than the Internet may take up to 30 days. Therefore, offerors that are not registered should consider applying for registration immediately upon receipt of this solicitation.

(c) The Contractor is responsible for the accuracy and completeness of the data within the CCR, and for any liability resulting from the Government's reliance on inaccurate or incomplete data. To remain registered in the CCR database after the initial registration, the Contractor is required to confirm on an annual basis that its information in the CCR database is accurate and complete.

(d) Offerors and contractors may obtain information on registration and annual confirmation requirements by calling 1-888-227-2423, or via the Internet at http://www.ccr.gov.

(End of clause)

252.205-7000 PROVISION OF INFORMATION TO COOPERATIVE AGREEMENT HOLDERS (DEC 1991)

(a) Definition.

"Cooperative agreement holder" means a State or local government; a private, nonprofit organization; a tribal organization (as defined in section 4(c) of the Indian Self-Determination and Education Assistance Act (Pub. L. 93-268; 25 U.S.C. 450 (c))); or an economic enterprise (as defined in section 3(e) of the Indian Financing Act of 1974 (Pub. L. 93-362; 25 U.S.C. 1452(e))) whether such economic enterprise is organized for profit or nonprofit purposes; which has an agreement with the Defense Logistics Agency to furnish procurement technical assistance to business entities.

(b) The Contractor shall provide cooperative agreement holders, upon their request, with a list of those appropriate employees or offices responsible for entering into subcontracts under defense contracts. The list shall include the business address, telephone number, and area of responsibility of each employee or office.

(c) The Contractor need not provide the listing to a particular cooperative agreement holder more frequently than once a year.

(End of clause)

252.209-7000 ACQUISITION FROM SUBCONTRACTORS SUBJECT TO ONSITE INSPECTION UNDER THE INTERMEDIATE-RANGE NUCLEAR FORCES (INF) TREATY (NOV 1995)

(a) The Contractor shall not deny consideration for a subcontract award under this contract to a potential subcontractor subject to on-site inspection under the INF Treaty, or a similar treaty, solely or in part because of the actual or potential presence of Soviet inspectors at the subcontractor's facility, unless the decision is approved by the Contracting Officer.

(b) The Contractor shall incorporate this clause, including this paragraph (b), in all solicitations and contracts exceeding the simplified acquisition threshold in part 13 of the Federal Acquisition Regulation, except those for commercial items.

(End of clause)

252.209-7004 SUBCONTRACTING WITH FIRMS THAT ARE OWNED OR CONTROLLED BY THE GOVERNMENT OF A TERRORIST COUNTRY (MAR 1998)

(a) Unless the Government determines that there is a compelling reason to do so, the Contractor shall not enter into any subcontract in excess of $25,000 with a firm, or subsidiary of a firm, that is identified, on the List of Parties Excluded from Federal Procurement and Nonprocurement Programs, as being ineligible for the award of Defense contracts or subcontracts because it is owned or controlled by the government of a terrorist country.

(b) A corporate officer or a designee of the Contractor shall notify the Contracting Officer, in writing, before entering into a subcontract with a party that is identified, on the List of Parties Excluded from Federal Procurement and Nonprocurement Programs, as being ineligible for the award of Defense contracts or subcontracts because it is owned or controlled by the government of a terrorist country. The notice must include the name of the proposed subcontractor notwithstanding its inclusion on the List of Parties Excluded From Federal Procurement and Nonprocurement Programs.

(End of clause)

252.215-7000 PRICING ADJUSTMENTS (DEC 1991)

The term "pricing adjustment," as used in paragraph (a) of the clauses entitled "Price Reduction for Defective Cost or Pricing Data - Modifications," "Subcontractor Cost or Pricing Data," and "Subcontractor Cost or Pricing Data - Modifications," means the aggregate increases and/or decreases in cost plus applicable profits.

(End of clause)

252.219-7003 SMALL, SMALL DISADVANTAGED AND WOMEN-OWNED SMALL BUSINESS SUBCONTRACTING PLAN (DOD CONTRACTS) (APR. 1996)

This clause supplements the Federal Acquisition Regulation 52.219-9, Small, Small Disadvantaged and Women-Owned Small Business Subcontracting Plan, clause of this contract.

(a) *Definitions. Historically black colleges and universities,* as used in this clause, means institutions determined by the Secretary of Education to meet the requirements of 34 CFR 608.2. The term also means any nonprofit research institution that was an integral part of such a college or university before November 14, 1986.

Minority institutions, as used in this clause, means institutions meeting the requirements of section 1046(3) of the Higher Education Act of 1965 (20 U.S.C. 1135d-5(3)). The term also includes Hispanic-serving institutions as defined in section 316(b)(1) of such Act (20 U.S.C. 1059c(b)(1)).

(b) Except for company or division-wide commercial items subcontracting plans, the term *small disadvantaged business,* when used in the FAR 52.219-9 clause, includes historically black colleges and universities and minority institutions, in addition to small disadvantaged business concerns.

(c) Work under the contract or its subcontracts shall be credited toward meeting the small disadvantaged business concern goal required by paragraph (d) of the FAR 52.219-9 clause when:

(1) It is performed on Indian lands or in joint venture with an Indian tribe or a tribally-owned corporation, and

(2) It meets the requirements of 10 U.S.C. 2323a.

(d) Subcontracts awarded to workshops approved by the Committee for Purchase from People Who are Blind or Severely Disabled (41 U.S.C. 46-48), may be counted toward the Contractor's small business subcontracting goal.

(e) A mentor firm, under the Pilot Mentor-Protege Program established under Section 831 of Pub. L. 101-510, as amended, may count toward its small disadvantaged business goal, subcontracts awarded--

(f) The master plan approval referred to in paragraph (f) of the FAR 52.219-9 clause is approval by the Contractor's cognizant contract administration activity.

(g) In those subcontracting plans which specifically identify small, small disadvantaged, and women-owned small businesses, the Contractor shall notify the Administrative Contracting Officer of any substitutions of firms that are not small, small disadvantaged, or women-owned small businesses for the firms listed in the subcontracting plan. Notifications shall be in writing and shall occur within a reasonable period of time after award of the subcontract. Contractor-specified formats shall be acceptable.

(End of clause)

252.223-7006 PROHIBITION ON STORAGE AND DISPOSAL OF TOXIC AND HAZARDOUS MATERIALS (APR 1993)

(a) "Definitions".

As used in this clause --

(1) "Storage" means a non-transitory, semi-permanent or permanent holding, placement, or leaving of material. It does not include a temporary accumulation of a limited quantity of a material used in or a waste generated or resulting from authorized activities, such as servicing, maintenance, or repair of Department of Defense (DoD) items, equipment, or facilities.

(2) "Toxic or hazardous materials" means:

(i) Materials referred to in section 101(14) of the Comprehensive Environmental Response, Compensation, and Liability Act (CERCLA) of 1980 (42 U.S.C. 9601(14)) and materials designated under section 102 of CERCLA (42 U.S.C. 9602) (40 CFR part 302);

(ii) Materials that are of an explosive, flammable, or pyrotechnic nature; or

(iii) Materials otherwise identified by the Secretary of Defense as specified in DoD regulations.

(b) In accordance with 10 U.S.C. 2692, the Contractor is prohibited from storing or disposing of non-DoD-owned toxic or hazardous materials on a DoD installation, except to the extent authorized by a statutory exception to 10 U.S.C. 2692 or as authorized by the Secretary of Defense or his designee.

(End of clause)

252.225-7012 PREFERENCE FOR CERTAIN DOMESTIC COMMODITIES (APR 2002)

(a) Definitions. As used in this clause--

(1) Component means any item supplied to the Government as part of an end product or of another component.

(2) End product means supplies delivered under a line item of this contract.

(b) The Contractor shall deliver under this contract only such of the following items, either as end products or components, that have been grown, reprocessed, reused, or produced in the United States, its possessions, or Puerto Rico:

(1) Food.

(2) Clothing.

(3) Tents, tarpaulins, or covers.

(4) Cotton and other natural fiber products.

(5) Woven silk or woven silk blends.

(6) Spun silk yarn for cartridge cloth.

(7) Synthetic fabric, and coated synthetic fabric, including all textile fibers and yarns that are for use in such fabrics.

(8) Canvas products.

(9) Wool (whether in the form of fiber or yarn or contained in fabrics, materials, or manufactured articles).

(10) Any item of individual equipment (Federal Supply Class 8465) manufactured from or containing fibers, yarns, fabrics, or materials listed in this paragraph (b).

(c) This clause does not apply--

(1) To items listed in section 25.104(a) of the Federal Acquisition Regulation (FAR), or other items for which the Government has determined that a satisfactory quality and sufficient quantity cannot be acquired as and when needed at U.S. market prices;

(2) To end products incidentally incorporating cotton, other natural fibers, or wool, for which the estimated value of the cotton, other natural fibers, or wool--

(i) Is not more than 10 percent of the total price of the end product; and (ii) Does not exceed the simplified acquisition threshold in FAR part 2;

(3) To foods that have been manufactured or processed in the United States, its possessions, or Puerto Rico, regardless of where the foods (and any component if applicable) were grown or produced;

(4) To chemical warfare protective clothing produced in the countries listed in subsection 225.872-1 of the Defense FAR Supplement; or

(5) To fibers and yarns that are for use in synthetic fabric or coated synthetic fabric (but does apply to the synthetic or coated synthetic fabric itself), if--

(i) The fabric is to be used as a component of an end product that is not a textile product. Examples of textile products, made in whole or in part of fabric, include--

(A) Draperies, floor coverings, furnishings, and bedding (Federal Supply Group 72, Household and Commercial Furnishings and Appliances);

(B) Items made in whole or in part of fabric in Federal Supply Group 83, Textile/leather/furs/apparel/findings/ tents/flags, or Federal Supply Group 84, Clothing, Individual Equipment and Insignia;

(C) Upholstered seats (whether for household, office, or other use); and

(D) Parachutes (Federal Supply Class 1670); or

(ii) The fibers and yarns are para-aramid fibers and yarns manufactured in the Netherlands.

(End of clause)

252.225-7031 SECONDARY ARAB BOYCOTT OF ISRAEL (JUN 1992)

(a) Definitions. As used in this clause--

(1) "Foreign person" means any person other than a United States person as defined in Section 16(2) of the Export Administration Act of 1979 (50 U.S.C. App. Sec 2415).

(2) "United States person" is defined in Section 16(2) of the Export Administration Act of 1979 and means any United States resident or national (other than an individual resident outside the United States and employed by other than a United States person), any domestic concern (including any permanent domestic establishment of any foreign concern), and any foreign subsidiary or affiliate (including any permanent foreign establishment) of any domestic concern which is controlled in fact by such domestic concerns, as determined under regulations of the President.

(b) Certification. By submitting this offer, the Offeror, if a foreign person, company or entity, certifies that it--

(1) Does not comply with the Secondary Arab Boycott of Israel; and

(2) Is not taking or knowingly agreeing to take any action, with respect to the Secondary Boycott of Israel by Arab countries, which 50 U.S.C. App. Sec 2407(a) prohibits a United States person from taking.

(End of clause)

252.226-7001 UTILIZATION OF INDIAN ORGANIZATIONS AND INDIAN-OWNED ECONOMIC ENTERPRISES-DOD CONTRACTS (SEP 2001)

(a) Definitions. As used in this clause--

"Indian" means any person who is a member of any Indian tribe, band, group, pueblo, or community that is recognized by the Federal Government as eligible for services from the Bureau of Indian Affairs (BIA) in accordance with 25 U.S.C. 1452(c) and any "Native" as defined in the Alaska Native Claims Settlement Act (43 U.S.C. 1601).

"Indian organization" means the governing body of any Indian tribe or entity established or recognized by the governing body of an Indian tribe for the purposes of 25 U.S.C. Chapter 17.

"Indian-owned economic enterprise" means any Indian-owned (as determined by the Secretary of the Interior) commercial, industrial, or business activity established or organized for the purpose of profit, provided that Indian ownership constitutes not less than 51 percent of the enterprise.

"Indian tribe" means any Indian tribe, band, group, pueblo, or community, including native villages and native groups (including corporations organized by Kenai, Juneau, Sitka, and Kodiak) as defined in the Alaska Native Claims Settlement Act, that is recognized by the Federal Government as eligible for services from BIA in accordance with 25 U.S.C. 1452 (c).

"Interested party" means a contractor or an actual or prospective offeror whose direct economic interest would be affected by the award of a subcontract or by the failure to award a subcontract.

(b) The Contract shall use its best efforts to give Indian organizations and Indian-owned economic enterprises the maximum practicable opportunity to participate in the subcontracts it awards, to the fullest extent consistent with efficient performance of the contract.

(c) The Contracting Officer and the Contractor, acting in good faith, may rely on the representation of an Indian organization or Indian-owned economic enterprise as to its eligibility, unless and interested party challenges its status or the Contracting Officer has independent reason to question that status.

(d) In the event of a challenge to the representation of a subcontractor, the Contracting Officer will refer the matter to the U.S. Department of the Interior, Bureau of Indian Affairs, Attn: Chief, Division of Contracting and Grants Administration, 1849 C Street NW, MS-2626-MIB, Washington, DC 20240-4000. The BIA will determine the eligibility and will notify the Contracting Officer. No incentive payment will be made--

(1) Within 59 working days of subcontract award;

(2) While a challenge is pending; or

(3) If a subcontractor is determined to be an ineligible participant.

(e)(1) The Contractor, on its own behalf or on behalf of a subcontractor at any tier, may request an adjustment under the Indian Incentive Program to the following:

(i) The estimated cost of cost-type contract.

(ii) The target cost of a cost-plus-incentive-fee contract.

(iii) The target cost and ceiling price of a fixed-price incentive contract.

(iv) The price of a firm-fixed-price contract.

(2) The amount of the adjustment that may be made to the contract is 5 percent of the estimated cost, target cost, or firm-fixed price included in the subcontract initially awarded to the Indian organization or Indian-owned economic enterprise.

(3) The Contractor has the burden of proving the amount claimed and must assert its request for an adjustment prior to completion of contract performance.

(4) The Contracting Officer, subject to the terms and conditions of the contract and the availability of funds, will authorize an incentive payment of 5 percent of the amount paid to the subcontractor.

(5) If the Contractor requests and receives an adjustment on behalf of a subcontractor, the Contractor is obligated to pay the subcontractor the adjustment.

(f) The Contractor shall insert the substance of this clause, including this paragraph (f), in all subcontracts that--

(1) Are for other than commercial items; and

(2) Are expected to exceed the simplified acquisition threshold in Part 2 of the Federal Acquisition Regulation.

(End of clause)

252.227-7033 RIGHTS IN SHOP DRAWINGS (APR 1966)

(a) Shop drawings for construction means drawings, submitted to the Government by the Construction Contractor, subcontractor or any lower-tier subcontractor pursuant to a construction contract, showing in detail (i) the proposed fabrication and assembly of structural elements and (ii) the installation (i.e., form, fit, and attachment details) of materials or equipment. The Government may duplicate, use, and disclose in any manner and for any purpose shop drawings delivered under this contract.

(b) This clause, including this paragraph (b), shall be included in all subcontracts hereunder at any tier.

252.236-7000 MODIFICATION PROPOSALS - PRICE BREAKDOWN. (DEC 1991)

(a) The Contractor shall furnish a price breakdown, itemized as required and within the time specified by the Contracting Officer, with any proposal for a contract modification.

(b) The price breakdown --

(1) Must include sufficient detail to permit an analysis of profit, and of all costs for --

(i) Material;

(ii) Labor;

(iii) Equipment;

(iv) Subcontracts; and

(v) Overhead; and

(2) Must cover all work involved in the modification, whether the work was deleted, added, or changed.

(c) The Contractor shall provide similar price breakdowns to support any amounts claimed for subcontracts.

(d) The Contractor's proposal shall include a justification for any time extension proposed.

252.236-7005 AIRFIELD SAFETY PRECAUTIONS. (DEC 1991)

(a) Definitions. As used in this clause --

(1) "Landing areas means" --

(i) The primary surfaces, comprising the surface of the runway, runway shoulders, and lateral safety zones. The length of each primary surface is the same as the runway length. The width of each primary surface is 2,000 feet (1,000 feet on each side of the runway centerline);

(ii) The "clear zone" beyond the ends of each runway, i.e., the extension of the primary surface for a distance of 1,000 feet beyond each end of each runway;

(iii) All taxiways, plus the lateral clearance zones along each side for the length of the taxiways (the outer edge of each lateral clearance zone is laterally 250 feet from the far or opposite edge of the taxiway, e.g., a 75-foot-wide taxiway would have a combined width of taxiway and lateral clearance zones of 425 feet); and

(iv) All aircraft parking aprons, plus the area 125 feet in width extending beyond each edge all around the aprons.

(2) "Safety precaution" areas means those portions of approach-departure clearance zones and transitional zones where placement of objects incident to contract performance might result in vertical projections at or above the approach-departure clearance, or the transitional surface.

(i) "The approach-departure clearance surface" is an extension of the primary surface and the clear zone at each end of each runway, for a distance of 50,000 feet, first along an inclined (glide angle) and then along a horizontal plane, both flaring symmetrically about the runway centerline extended.

(A) The inclined plane (glide angle) begins in the clear zone 200 feet past the end of the runway (and primary surface) at the same elevation as the end of the runway. It continues upward at a slope of 50:1 (1 foot vertically for each 50 feet horizontally) to an elevation of 500 feet above the established airfield elevation. At that point the plane becomes horizontal, continuing at that same uniform elevation to a point 50,000 feet longitudinally from the beginning of the inclined plane (glide angle) and ending there.

(B) The width of the surface at the beginning of the inclined plane (glide angle) is the same as the width of the clear zone. It then flares uniformly, reaching the maximum width of 16,000 feet at the end.

(ii) The "approach-departure clearance zone" is the ground area under the approach-departure clearance surface.

(iii) The "transitional surface" is a sideways extension of all primary surfaces, clear zones, and approach-departure clearance surfaces along inclined planes.

(A) The inclined plane in each case begins at the edge of the surface.

(B) The slope of the incline plane is 7:1 (1 foot vertically for each 7 feet horizontally). It continues to the point of intersection with the --

(1) Inner horizontal surface (which is the horizontal plane 150 feet above the established airfield elevation); or

(2) Outer horizontal surface (which is the horizontal plane 500 feet above the established airfield elevation), whichever is applicable.

(iv) The "transitional zone" is the ground area under the transitional surface. (It adjoins the primary surface, clear zone, and approach-departure clearance zone.)

(b) General. (1) The Contractor shall comply with the requirements of this clause while --

(i) Operating all ground equipment (mobile or stationary);

(ii) Placing all materials; and

(iii) Performing all work, upon and around all airfields.

(2) The requirements of this clause are in addition to any other safety requirements of this contract.

(c) The Contractor shall -

(1) Report to the Contracting Officer before initiating any work;

(2) Notify the Contracting Officer of proposed changes to locations and operations;

(3) Not permit either its equipment or personnel to use any runway for purposes other than aircraft operation without permission of the Contracting Officer, unless the runway is -

(i) Closed by order of the Contracting Officer; and

(ii) Marked as provided in paragraph (d)(2) of this clause;

(4) Keep all paved surfaces, such as runways, taxiways, and hardstands, clean at all times and, specifically, free from small stones which might damage aircraft propellers or jet aircraft;

(5) Operate mobile equipment according to the safety provisions of this clause, while actually performing work on the airfield. At all other times, the Contractor shall remove all mobile equipment to locations -

(i) Approved by the Contracting Officer;

(ii) At a distance of at least 750 feet from the runway centerline, plus any additional distance; and

(iii) Necessary to ensure compliance with the other provisions of this clause; and

(6) Not open a trench unless material is on hand and ready for placing in the trench. As soon as practicable after

material has been placed and work approved, the Contractor shall backfill and compact trenches as required by the contract. Meanwhile, all hazardous conditions shall be marked and lighted in accordance with the other provisions of this clause.

(d) Landing areas. The Contractor shall -

(1) Place nothing upon the landing areas without the authorization of the Contracting Officer;

(2) Outline those landing areas hazardous to aircraft, using (unless otherwise authorized by the Contracting Officer) red flags by day, and electric, battery-operated low-intensity red flasher lights by night;

(3) Obtain, at an airfield where flying is controlled, additional permission from the control tower operator every time before entering any landing area, unless the landing area is marked as hazardous in accordance with paragraph (d)(2) of this clause;

(4) Identify all vehicles it operates in landing areas by means of a flag on a staff attached to, and flying above, the vehicle. The flag shall be three feet square, and consist of a checkered pattern of international orange and white squares of 1 foot on each side (except that the flag may vary up to ten percent from each of these dimensions);

(5) Mark all other equipment and materials in the landing areas, using the same marking devices as in paragraph (d)(2) of this clause; and

(6) Perform work so as to leave that portion of the landing area which is available to aircraft free from hazards, holes, piles of material, and projecting shoulders that might damage an airplane tire.

(e) Safety precaution areas. The Contractor shall -

(1) Place nothing upon the safety precaution areas without authorization of the Contracting Officer;

(2) Mark all equipment and materials in safety precaution areas, using (unless otherwise authorized by the Contracting Officer) red flags by day, and electric, battery-operated, low-intensity red flasher lights by night; and

(3) Provide all objects placed in safety precaution areas with a red light or red lantern at night, if the objects project above the approach-departure clearance surface or above the transitional surface.

252.242-7000 POSTAWARD CONFERENCE (DEC 1991)

The Contractor agrees to attend any postaward conference convened by the contracting activity or contract administration office in accordance with Federal Acquisition Regulation subpart 42.5.

(End of clause)

252.242-7004 MATERIAL MANAGEMENT AND ACCOUNTING SYSTEM (SEP 1996)

(a) Definitions. As used in this clause--

(1) Material management and accounting system means the Contractor's system or systems for planning, controlling, and accounting for the acquisition, use, issuing, and disposition of material. Material management and accounting systems may be manual or automated. They may be stand-alone systems or they may be integrated with planning, engineering, estimating, purchasing, inventory, accounting, or other systems.

(2) Valid time-phased requirements means material which is --

Needed to fulfill the production plan, including reasonable quantities for scrap, shrinkage, yield, etc.; and

(ii) Charged/billed to contracts or other cost objectives in a manner consistent with the need to fulfill the production plan.

(3) Contractor means a business unit as defined in section 31.001 of the Federal Acquisition Regulation (FAR).

(b) General. The Contractor agrees to--

(1) Maintain a material management and accounting system (MMAS) that--

(i) Reasonably forecasts material requirements;

(ii) Ensures that costs of purchased and fabricated material charged or allocated to a contract are based on valid time-phased requirements; and

(iii) Maintains a consistent, equitable, and unbiased logic for costing of material transactions.

(2) Assess its MMAS and take reasonable action to comply with the MMAS standards in paragraph (f) of this clause.

(c) Applicability. Paragraphs (d) and (e) of this clause apply only if the Contractor--

(1) Is a large business; and

(2) Received, in its fiscal year preceding award of this contract, Department of Defense prime contracts or subcontracts, and their modifications totaling--

(i) $70 million or more; or

(ii) $30 million or more (but less than $70 million), and is notified in writing by the Contracting Officer that paragraphs (d) and (e) apply.

(d) Disclosure, demonstration, and maintenance requirements. (1) The Contractor shall--

Disclose its MMAS to the Administrative Contracting Officer in writing; and

(ii) If requested by the Administrative Contracting Officer, demonstrate that the MMAS conforms to the standards in paragraph (f) of this clause.

(2) An MMAS disclosure is adequate when the Contractor has provided the Administrative Contracting Officer with documentation which--

(i) Accurately describes those policies, procedures, and practices that the Contractor currently uses in its MMAS; and

(ii) Provides sufficient detail for the Government to reasonably make an informed judgment regarding the adequacy of the MMAS.

(3) An MMAS demonstration is adequate when the Contractor has provided the Administrative Contracting Officer--

(i) Sufficient evidence to demonstrate the degree of compliance of its MMAS with the standards at paragraph (f) of this clause; and

(ii) Identification of any significant deficiencies, the estimated cost impact of the deficiency, and a comprehensive corrective action plan.

(4) The Contractor shall disclose significant changes in its MMAS to the Administrative Contracting Officer within 30 days of implementation.

(5) If the contractor desires the Government to protect such information as privileged or confidential, the Contractor shall--

(i) Notify the Government representative to whom the information is submitted, i.e., the ACO, or the auditor; and

(ii) Ensure an appropriate legend is on the face of the document(s) at the time of submission.

(e) Deficiencies. (1) If the Contractor receives a report which identifies deficiencies in its MMAS, the Contractor agrees to respond as follows--

(i) If the Contractor agrees with the report findings and recommendations, the Contractor shall--

(A) Within 30 days, state its agreement in writing; and

(B) Within 60 days, correct the deficiencies or submit a corrective action plan.

(ii) If the Contractor disagrees with the report findings and recommendations, the Contractor shall, within 30 days, state its rationale for each area of disagreement.

(2) The Administrative Contracting Officer shall evaluate the Contractor's response and notify the Contractor of the--

(i) Determination concerning remaining deficiencies;

(ii) Adequacy of any proposed or completed corrective action plan; and

(iii) Need for any new or revised corrective action plan.

(f) MMAS standards. MMAS systems shall have adequate internal accounting and administrative controls to ensure system and data integrity, and comply with the following:

(1) Have an adequate system description including policies, procedures, and operating instructions which comply with the Federal Acquisition Regulation and Defense FAR Supplement;

(2) Ensure that costs of purchased and fabricated material charged or allocated to a contract are based on valid time-phased requirements as impacted by minimum/economic order quantity restrictions--

(i) A 98 percent bill of material accuracy and a 95 percent master production schedule accuracy are desirable as a goal in order to ensure that requirements are both valid and appropriately time-phased.

(ii) If systems have accuracy levels below these, the Contractor shall demonstrate that--

(A) There is no material harm to the Government due to lower accuracy levels; and

(B) The cost to meet the accuracy goals is excessive in relation to the impact on the Government;

(3) Provide a mechanism to identify, report, and resolve system control weaknesses and manual override. Systems should identify operational exceptions such as excess/residual inventory as soon as known;

(4) Provide audit trails and maintain records (manual and those in machine readable form) necessary to evaluate system logic and to verify through transaction testing that the system is operating as desired;

(5) Establish and maintain adequate levels of record accuracy, and include reconciliation of recorded inventory quantities to physical inventory by part number on a periodic basis. A 95 percent accuracy level is desirable. If systems have an accuracy level below 95 percent, the Contractor shall demonstrate that--

(i) There is no material harm to the Government due to lower accuracy levels; and

(ii) The cost to meet the accuracy goal is excessive in relation to the impact on the Government;

(6) Provide detailed descriptions of circumstances which will result in manual or system generated transfers of parts;

(7) Maintain a consistent, equitable, and unbiased logic for costing of material transactions--

(i) The Contractor shall maintain and disclose written policies describing the transfer methodology and the loan/pay-back technique.

(ii) The costing methodology may be standard or actual cost, or any of the inventory costing methods in 48 CFR 9904.411-50(b). Consistency shall be maintained across all contract and customer types, and from accounting period to accounting period for initial charging and transfer charging.

(iii) The system should transfer parts and associated costs within the same billing period. In the few instances where this may not be appropriate, the Contractor may accomplish the material transaction using a loan/pay-back technique. The “loan/pay-back technique” means that the physical part is moved temporarily from the contract, but the cost of the part remains on the contract. The procedures for the loan/pay-back technique must be approved by the Administrative Contracting Officer. When the technique is used, the Contractor shall have controls to ensure--

(A) Parts are paid back expeditiously;

(B) Procedures and controls are in place to correct any overbilling that might occur;

(C) Monthly, at a minimum, identification of the borrowing contract and the date the part was borrowed; and

(D) The cost of the replacement part is charged to the borrowing contract;

(8) Where allocations from common inventory accounts are used, have controls (in addition to those in paragraphs (b)(2) and (7) of this clause) to ensure that--

(i) Reallocations and any credit due are processed no less frequently than the routine billing cycle;

(ii) Inventories retained for requirements which are not under contract are not allocated to contracts; and

(iii) Algorithms are maintained based on valid and current data;

(9) Notwithstanding FAR 45.505-3(f)(1)(ii), have adequate controls to ensure that physically commingled inventories that may include material for which costs are charged or allocated to fixed-price, cost-reimbursement, and commercial contracts do not compromise requirements of any of the standards in paragraphs (f)(1) through (8) of this clause.

Government furnished material shall not be--

(i) Physically commingled with other material; or

(ii) Used on commercial work; and

(10) Be subjected to periodic internal audits to ensure compliance with established policies and procedures.

(End of clause)

252.243-7001 PRICING OF CONTRACT MODIFICATIONS (DEC 1991)

When costs are a factor in any price adjustment under this contract, the contract cost principles and procedures in FAR part 31 and DFARS part 231, in effect on the date of this contract, apply.

252.243-7002 REQUESTS FOR EQUITABLE ADJUSTMENT (MAR 1998)

(a) The amount of any request for equitable adjustment to contract terms shall accurately reflect the contract adjustment for which the Contractor believes the Government is liable. The request shall include only costs for performing the change, and shall not include any costs that already have been reimbursed or that have been separately claimed. All indirect costs included in the request shall be properly allocable to the change in accordance with applicable acquisition regulations.

(b) In accordance with 10 U.S.C. 2410(a), any request for equitable adjustment to contract terms that exceeds the simplified acquisition threshold shall bear, at the time of submission, the following certificate executed by an individual authorized to certify the request on behalf of the Contractor:

I certify that the request is made in good faith, and that the supporting data are accurate and complete to the best of my knowledge and belief.

(Official's Name)

(Title)

(c) The certification in paragraph (b) of this clause requires full disclosure of all relevant facts, including--

(1) Cost or pricing data if required in accordance with subsection 15.403-4 of the Federal Acquisition Regulation (FAR); and

(2) Information other than cost or pricing data, in accordance with subsection 15.403-3 of the FAR, including actual cost data and data to support any estimated costs, even if cost or pricing data are not required.

(d) The certification requirement in paragraph (b) of this clause does not apply to----

(1) Requests for routine contract payments; for example, requests for payment for accepted supplies and services, routine vouchers under a cost-reimbursement type contract, or progress payment invoices; or

(2) Final adjustment under an incentive provision of the contract.

252.244-7000 SUBCONTRACTS FOR COMMERCIAL ITEMS AND COMMERCIAL COMPONENTS (DOD) (MAR 2000)

In addition to the clauses listed in paragraph (c) of the Subcontracts for Commercial Items and Commercial Components clause of this contract (Federal Acquisition Regulation 52.244-6), the Contractor shall include the terms of the following clauses, if applicable, in subcontracts for commercial items or commercial components, awarded at any tier under this contract:

252.225-7014 Preference for Domestic Specialty Metals, Alternate I (10 U.S.C. 2241 note).

252.247-7023 Transportation of Supplies by Sea (10 U.S.C. 2631).

252.247-7024 Notification of Transportation of Supplies by Sea (10 U.S.C. 2631).

(End of clause)

252.247-7023 TRANSPORTATION OF SUPPLIES BY SEA (MAY 2002)

(a) Definitions. As used in this clause --

(1) "Components" means articles, materials, and supplies incorporated directly into end products at any level of manufacture, fabrication, or assembly by the Contractor or any subcontractor.

(2) "Department of Defense" (DoD) means the Army, Navy, Air Force, Marine Corps, and defense agencies.

(3) "Foreign flag vessel" means any vessel that is not a U.S.-flag vessel.

(4) "Ocean transportation" means any transportation aboard a ship, vessel, boat, barge, or ferry through international waters.

(5) "Subcontractor" means a supplier, materialman, distributor, or vendor at any level below the prime contractor whose contractual obligation to perform results from, or is conditioned upon, award of the prime contract and who is performing any part of the work or other requirement of the prime contract.

(6) "Supplies" means all property, except land and interests in land, that is clearly identifiable for eventual use by or owned by the DoD at the time of transportation by sea.

(i) An item is clearly identifiable for eventual use by the DoD if, for example, the contract documentation contains a reference to a DoD contract number or a military destination.

(ii) "Supplies" includes (but is not limited to) public works; buildings and facilities; ships; floating equipment and vessels of every character, type, and description, with parts, subassemblies, accessories, and equipment; machine tools; material; equipment; stores of all kinds; end items; construction materials; and components of the foregoing.

(7) "U.S.-flag vessel" means a vessel of the United States or belonging to the United States, including any vessel registered or having national status under the laws of the United States.

(b)(1) The Contractor shall use U.S.-flag vessels when transporting any supplies by sea under this contract.

(2) A subcontractor transporting supplies by sea under this contract shall use U.S.-flag vessels if--

(i) This contract is a construction contract; or

(ii) The supplies being transported are--

(A) Noncommercial items; or

(B) Commercial items that--

(1) The Contractor is reselling or distributing to the Government without adding value (generally, the Contractor does not add value to items that it contracts for f.o.b. destination shipment);

(2) Are shipped in direct support of U.S. military contingency operations, exercises, or forces deployed in humanitarian or peacekeeping operations; or

(3) Are commissary or exchange cargoes transported outside of the Defense Transportation System in accordance with 10 U.S.C. 2643.

(c) The Contractor and its subcontractors may request that the Contracting Officer authorize shipment in foreign-flag vessels, or designate available U.S.-flag vessels, if the Contractor or a subcontractor believes that --

(1) U.S.-flag vessels are not available for timely shipment;

(2) The freight charges are inordinately excessive or unreasonable; or

(3) Freight charges are higher than charges to private persons for transportation of like goods.

(d) The Contractor must submit any request for use of other than U.S.-flag vessels in writing to the Contracting Officer at least 45 days prior to the sailing date necessary to meet its delivery schedules. The Contracting Officer will process requests submitted after such date(s) as expeditiously as possible, but the Contracting Officer's failure to grant approvals to meet the shipper's sailing date will not of itself constitute a compensable delay under this or any other clause of this contract. Requests shall contain at a minimum --

(1) Type, weight, and cube of cargo;

(2) Required shipping date;

(3) Special handling and discharge requirements;

(4) Loading and discharge points;

(5) Name of shipper and consignee;

(6) Prime contract number; and

(7) A documented description of efforts made to secure U.S.-flag vessels, including points of contact (with names and telephone numbers) with at least two U.S.-flag carriers contacted. Copies of telephone notes, telegraphic and facsimile message or letters will be sufficient for this purpose.

(e) The Contractor shall, within 30 days after each shipment covered by this clause, provide the Contracting Officer and the Maritime Administration, Office of Cargo Preference, U.S. Department of Transportation, 400 Seventh Street

SW., Washington, DC 20590, one copy of the rated on board vessel operating carrier's ocean bill of lading, which shall contain the following information:

(1) Prime contract number;

(2) Name of vessel;

(3) Vessel flag of registry;

(4) Date of loading;

(5) Port of loading;

(6) Port of final discharge;

(7) Description of commodity;

(8) Gross weight in pounds and cubic feet if available;

(9) Total ocean freight in U.S. dollars; and

(10) Name of the steamship company.

(f) The Contractor shall provide with its final invoice under this contract a representation that to the best of its knowledge and belief--

(1) No ocean transportation was used in the performance of this contract;

(2) Ocean transportation was used and only U.S.-flag vessels were used for all ocean shipments under the contract;

(3) Ocean transportation was used, and the Contractor had the written consent of the Contracting Officer for all non-U.S.-flag ocean transportation; or

(4) Ocean transportation was used and some or all of the shipments were made on non-U.S.-flag vessels without the written consent of the Contracting Officer. The Contractor shall describe these shipments in the following format:

ITEM DESCRIPTION	CONTRACT LINE ITEMS	QUANTITY

TOTAL_____

(g) If the final invoice does not include the required representation, the Government will reject and return it to the Contractor as an improper invoice for the purposes of the Prompt Payment clause of this contract. In the event there has been unauthorized use of non-U.S.-flag vessels in the performance of this contract, the Contracting Officer is entitled to equitably adjust the contract, based on the unauthorized use.

(h) In the award of subcontracts for the types of supplies described in paragraph (b)(2) of this clause, the Contractor shall flow down the requirements of this clause as follows:

(1) The Contractor shall insert the substance of this clause, including this paragraph (h), in subcontracts that exceed the simplified acquisition threshold in part 2 of the Federal Acquisition Regulation.

(2) The Contractor shall insert the substance of paragraphs (a) through (e) of this clause, and this paragraph (h), in subcontracts that are at or below the simplified acquisition threshold in part 2 of the Federal Acquisition Regulation.

(End of clause)

252.247-7024 NOTIFICATION OF TRANSPORTATION OF SUPPLIES BY SEA (MAR 2000)

(a) The Contractor has indicated by the response to the solicitation provision, Representation of Extent of Transportation by Sea, that it did not anticipate transporting by sea any supplies. If, however, after the award of this contract, the Contractor learns that supplies, as defined in the Transportation of Supplies by Sea clause of this contract, will be transported by sea, the Contractor --

(1) Shall notify the Contracting Officer of that fact; and

(2) Hereby agrees to comply with all the terms and conditions of the Transportation of Supplies by Sea clause of this contract.

(b) The Contractor shall include this clause; including this paragraph (b), revised as necessary to reflect the relationship of the contracting parties--

(1) In all subcontracts under this contract, if this contract is a construction contract; or

(2) If this contract is not a construction contract, in all subcontracts under this contract that are for--

(i) Noncommercial items; or

(ii) Commercial items that--

(A) The Contractor is reselling or distributing to the Government without adding value (generally, the Contractor does not add value to items that it subcontracts for f.o.b. destination shipment);

(B) Are shipped in direct support of U.S. military contingency operations, exercises, or forces deployed in humanitarian or peacekeeping operations; or

(C) Are commissary or exchange cargoes transported outside of the Defense Transportation System in accordance with 10 U.S.C. 2643.

(End of clause)

Section 00800 - Special Contract Requirements

CLAUSES INCORPORATED BY FULL TEXT

52.211-10 COMMENCEMENT, PROSECUTION, AND COMPLETION OF WORK (APR 1984)

The Contractor shall be required to (a) commence work under this contract within 10 calendar days after the date the Contractor receives the notice to proceed, (b) prosecute the work diligently, and (c) complete the entire work ready for use not later than 720 days after Notice to Proceed. The time stated for completion shall include final cleanup of the premises.

(End of clause)

52.211-12 LIQUIDATED DAMAGES--CONSTRUCTION (SEP 2000)

(a) If the Contractor fails to complete the work within the time specified in the contract, the Contractor shall pay liquidated damages to the Government in the amount of $915.00 for each calendar day of delay until the work is completed or accepted.

(b) If the Government terminates the Contractor's right to proceed, liquidated damages will continue to accrue until the work is completed. These liquidated damages are in addition to excess costs of repurchase under the Termination clause.

(End of clause)

52.211-13 TIME EXTENSIONS (SEP 2000)

Time extensions for contract changes will depend upon the extent, if any, by which the changes cause delay in the completion of the various elements of construction. The change order granting the time extension may provide that the contract completion date will be extended only for those specific elements related to the changed work and that the remaining contract completion dates for all other portions of the work will not be altered. The change order also may provide an equitable readjustment of liquidated damages under the new completion schedule.

(End of clause)

52.217-7 OPTION FOR INCREASED QUANTITY--SEPARATELY PRICED LINE ITEM (MAR 1989)

The Government may require the delivery of the numbered line item, identified in the Schedule as an option item, in the quantity and at the price stated in the Schedule. The Contracting Officer may exercise the option by written notice to the Contractor at anytime during the contract. Delivery of added items shall continue at the same rate that like items are called for under the contract, unless the parties otherwise agree.

(End of clause)

52.219-4002 REPORTING REQUIREMENTS--SUBCONTRACTING PLAN (CESAD-CT JUL 1993)

(a) Retainage will be withheld from progress payments in an amount sufficient to protect the Government's ability to assess Liquidated Damages in accordance with FAR clause 52.219-0016 for failure to submit timely SF 294 and SF 295 Reports. The amount of retainage will be determined in accordance with the following formula:

(b) Total dollar amount proposed for subcontracting to small business multiplied by percentage of actual progress on the contract, up to a maximum of 10% of the given progress payment, shall be withheld from the next progress payment due after a contractor fails to submit a required report. If one or more reports have been submitted before such failure, formula for determining the amount of retainage will be adjusted by deducting any amounts reported as subcontracted to small business from the total dollar amount proposed to be subcontracted and the difference multiplied by the percent of actual progress, up to a maximum of 10% of the given progress payment.

(End of clause)

52.223-9 ESTIMATE OF PERCENTAGE OF RECOVERED MATERIAL CONTENT FOR EPA-DESIGNATED PRODUCTS (AUG 2000)

(a) Definitions. As used in this clause--

Postconsumer material means a material or finished product that has served its intended use and has been discarded for disposal or recovery, having completed its life as a consumer item. Postconsumer material is a part of the broader category of “recovered material.”

Recovered material means waste materials and by-products recovered or diverted from solid waste, but the term does not include those materials and by-products generated from, and commonly reused within, an original manufacturing process.

(b) The Contractor, on completion of this contract, shall--

(1) Estimate the percentage of the total recovered material used in contract performance, including, if applicable, the percentage of postconsumer material content; and

(2) Submit this estimate to: US Army Engineer District, Savannah
ATTN: CESAS-CT-C
100 West Oglethorpe Avenue
Savannah, Georgia 31401-3640

(End of clause)

52.223-4002 U.S. ARMY CORPS OF ENGINEERS SAFETY AND HEALTH REQUIREMENTS MANUAL, EM 385-1-1

This paragraph applies to contracts and purchase orders that require the contractor to comply with EM 385-1-1 (e.g., contracts that include the Accident Prevention clause at FAR 52.236-13 and/or other safety provisions). EM 385-1-1 and its changes are available at http://www.hq.usace.army.mil. (At the HQ homepage, select Safety and Occupational Health.) The Contractor shall be responsible for complying with the current edition and all changes posted on the web through the date that is 10 calendar days prior to the date offers are due. If the solicitation is amended to extend the time set for receipt of offers, the 10 calendar days rule stated above shall be applied against the amended date. (For example, if offers are due on 10 April, all changes posted on or before 31 March shall apply to the contract. If the time for receipt of offers is extended from 10 April to 20 April, all changes posted on or before 10 April shall apply to the contract.)

52.228-4002 REQUIRED INSURANCE (FEB 1987 SAS) (Ref. FAR 28.307)

(a) The Contractor shall procure and maintain during the entire period of his performance under this contract the following minimum insurance:

Comprehensive and Employer's Liability Insurance in the amount required by the State law in which the work is to be performed under this contract.

Comprehensive General Liability Insurance in an amount not less than $500,000 per accident.

Automobile Liability Insurance: $200,000 per person and $500,000 per accident for bodily injury liability and $20,000 property damage liability.

(b) Prior to the commencement of work hereunder, the Contractor shall furnish to the Contracting Officer a certificate or written statement of the above-required insurance. The policies evidencing required insurance shall contain an endorsement to the effect that cancellation, or any material change in the policies adversely affecting the interests of the Government in such insurance, shall not be effective for such period as may be prescribed by the laws of the State in which this contract is to be performed and in no event less than 30 days after written notice thereof to the Contracting Officer.

(c) The Contractor agrees to insert the substance of this clause, including this subparagraph (c), in all subcontracts hereunder.

(End of clause)

52.231-5000 EQUIPMENT OWNERSHIP AND OPERATING EXPENSE SCHEDULE
MAR 1995)--EFARS

(a) This clause does not apply to terminations. See 52.249-5000, Basis for Settlement of Proposals and FAR Part 49.

(b) Allowable cost for construction and marine plant and equipment in sound workable condition owned or controlled and furnished by a contractor or subcontractor at any tier shall be based on actual cost data for each piece of equipment or groups of similar serial and series for which the Government can determine both ownership and operating costs from the contractor's accounting records. When both ownership and operating costs cannot be determined for any piece of equipment or groups of similar serial or series equipment from the contractor's accounting records, costs for that equipment shall be based upon the applicable provisions of EP 1110-1-8, Construction Equipment Ownership and Operating Expense Schedule, Region III. Working conditions shall be considered to be average for determining equipment rates using the schedule unless specified otherwise by the contracting officer. For equipment not included in the schedule, rates for comparable pieces of equipment may be used or a rate may be developed using the formula provided in the schedule. For forward pricing, the schedule in effect at the time of negotiations shall apply. For retroactive pricing, the schedule in effect at the time the work was performed shall apply.

(c) Equipment rental costs are allowable, subject to the provisions of FAR 31.105(d)(ii) and FAR 31.205-36. Rates for equipment rented from an organization under common control, lease-purchase arrangements, and sale-leaseback arrangements, will be determined using the schedule, except that actual rates will be used for equipment leased from an organization under common control that has an established practice of leasing the same or similar equipment to unaffiliated lessees.

(d) When actual equipment costs are proposed and the total amount of the pricing action exceeds the small purchase threshold, the contracting officer shall request the contractor to submit either certified cost or pricing data, or partial/limited data, as appropriate. The data shall be submitted on Standard Form 1411, Contract Pricing Proposal Cover Sheet.

(End of clause)

52.232-4007 ACCOUNTING AND APPROPRIATION DATA (APR 1989 CESAS-RM)
See Section 00100, Instructions, Conditions and Notice to Bidders
(End of clause)

52.232-4008 DESIGNATED BILLING OFFICE (APR 1989 CESAS-RM)

Invoices will be mailed to:
Daniel Davis
CESAS-CD-PSP
527 Interceptor Road, Bldg 255
Pope AFB, North Carolina 28308
(910) 907-3130 ext 202

(End of Clause)

52.232-4009 DESIGNATED PAYMENT OFFICE (AUG 1998 CESAS-RM-F)

Payment will be made by:
U.S. Army Corps of Engineers Finance Center
ATTN: CEFC-AO-P
5720 Integrity Drive
Millington, TN 38054-5005
(End of clause)

52.232-5000 PAYMENT FOR MATERIALS DELIVERED OFF-SITE (MAR 1995)—EFARS

(a) Pursuant to FAR clause 52.232-5, Payments Under Fixed Priced Construction Contracts, materials delivered to the contractor at locations other than the site of the work may be taken into consideration in making payments if included in payment estimates and if all the conditions of the General Provisions are fulfilled. Payment for items delivered to locations other than the work site will be limited to: (1) materials required by the technical provisions; or (2) materials that have been fabricated to the point where they are identifiable to an item of work required under this contract.
(b) Such payment will be made only after receipt of paid or receipted invoices or invoices with canceled check showing title to the items in the prime contractor and including the value of material and labor incorporated into the item. In addition to petroleum products, payment for materials delivered off-site is limited to the following items:
_____

(End of clause)

52.236-1 PERFORMANCE OF WORK BY THE CONTRACTOR (APR 1984)

The Contractor shall perform on the site, and with its own organization, work equivalent to at least twenty percent (20%) percent of the total amount of work to be performed under the contract. This percentage may be reduced by a supplemental agreement to this contract if, during performing the work, the Contractor requests a reduction and the Contracting Officer determines that the reduction would be to the advantage of the Government.

(End of clause)

52.236-4 PHYSICAL DATA (APR 1984)

Data and information furnished or referred to below is for the Contractor's information. The Government shall not be responsible for any interpretation of or conclusion drawn from the data or information by the Contractor.

(a) The indications of physical conditions on the drawings and in the specifications are the result of site investigations by . . . . . [insert a description of investigational methods used, such as surveys, auger borings, core borings, test pits, probings, test tunnels].

(b) Weather conditions . . . . . (insert a summary of weather records and warnings).

(c) Transportation facilities . . . . . (insert a summary of transportation facilities providing access from the site, including information about their availability and limitations.

(d) . . . . . (insert other pertinent information).

(End of clause)

52.236-14 AVAILABILITY AND USE OF UTILITY SERVICES (APR 1984)

(a) The Government shall make all reasonably required amounts of utilities available to the Contractor from existing outlets and supplies, as specified in the contract. Unless otherwise provided in the contract, the amount of each utility service consumed shall be charged to or paid for by the Contractor at prevailing rates charged to the Government or, where the utility is produced by the Government, at reasonable rates determined by the Contracting Officer. The Contractor shall carefully conserve any utilities furnished without charge.

(b) The Contractor, at its expense and in a workmanlike manner satisfactory to the Contracting Officer, shall install and maintain all necessary temporary connections and distribution lines, and all meters required to measure the amount of each utility used for the purpose of determining charges. Before final acceptance of the work by the Government, the Contractor shall remove all the temporary connections, distribution lines, meters, and associated paraphernalia.

(End of clause)

52.236-4013 CONTRACTOR-PREPARED NETWORK ANALYSIS SYSTEM
(January 2002 SAS) (Ref. DFARS 236.273)

The progress chart to be prepared by the contractor pursuant to FAR 52.236-15, Schedules for Construction Contracts, shall utilize the Critical Path Method (CPM) of network calculation. (See Attachment 1 to Section 00800).

52.236-4015 PRECONSTRUCTION CONFERENCE (OCT 1988 SAS) (Ref. FAR 36.305)

(a) A preconstruction conference will be arranged by the Area/Resident Engineer after award of contract and before commencement of work. The Area/Resident Engineer will notify the Contractor of the time and date set for the meeting. At this conference, the Contractor shall be oriented with respect to Government procedures and line of authority, contractual, administrative, and construction matters.

(b) The Contractor shall bring to this conference, in completed form, a Certificate of Insurance, plus the following items in either completed or draft form:

Accident Prevention Plan (5 copies)
(use format shown in Attachment 1 to SECTION 00800)
Quality Control Plan (5 copies)
Letter Appointing Superintendent
Transmittal Register
Power of Attorney and Certified Copy of Resolution
Network Analysis System, when applicable
List of Subcontractors

(c) A letter of record will be written documenting all items discussed at the conference, and a copy will be furnished by the Area/Resident Engineer to all in attendance.

(End of clause)

52.236-4016 VIDEO TAPING OPERATING AND MAINTENANCE INSTRUCTIONS (MAR 1987 SASCD-SQ)

For all of the operating and maintenance instructions which are required in the contract specifications, the Contractor shall video tape these instructions as they are presented to the Government representatives. These tapes shall provide clear and understandable detailed instructions for all items required by the contract specifications. The tapes shall be prepared by an experienced video director/cameraman using good quality half-inch VHS color tape with correct sound equipment, lighting, and backdrop. The sound and picture quality shall be high and subject to approval by the Contracting Officer. The tapes are intended as followup training for other Government representatives at a later date. They must be suitable for this purpose. The Contractor shall be responsible for the contents of the instructions and shall verify that they are correct prior to taping. The Contractor may submit individual equipment manufacturer's instructional tape(s), provided they meet the above qualifications and cover the actual equipment that is installed. The tape(s) shall be for specific equipment identified by contents and contract name and number. The Contractor shall submit one copy of the tape(s) to the Contracting Officer for review and approval. Unacceptable tapes are to be corrected by the Contractor as indicated by the Contracting Officer at no additional cost to the Government.

(End of clause)

52.236-4017 SUBMITTAL OF MODIFICATION COST ESTIMATE PROPOSALS (MAR 1992 SAS)
(Ref. DFARS 52.236-7000)

When submittals of Cost Estimate Proposals are required for additions or deletions to work under this contract by modification, the Contractor shall use DA Form 5418-R titled "Cost Estimate Analysis" (see Attachment 1 to SECTION 00800). A separate assemblage will be prepared for submittal by each trade affected by the proposed work.

(End of clause)

52.246-12 INSPECTION OF CONSTRUCTION (AUG 1996)

(a) Definition. "Work" includes, but is not limited to, materials, workmanship, and manufacture and fabrication of components.

(b) The Contractor shall maintain an adequate inspection system and perform such inspections as will ensure that the work performed under the contract conforms to contract requirements. The Contractor shall maintain complete inspection records and make them available to the Government. All work shall be conducted under the general direction of the Contracting Officer and is subject to Government inspection and test at all places and at all reasonable times before acceptance to ensure strict compliance with the terms of the contract.

(c) Government inspections and tests are for the sole benefit of the Government and do not--

(1) Relieve the Contractor of responsibility for providing adequate quality control measures;

(2) Relieve the Contractor of responsibility for damage to or loss of the material before acceptance;

(3) Constitute or imply acceptance; or

(4) Affect the continuing rights of the Government after acceptance of the completed work under paragraph (i) of this section.

(d) The presence or absence of a Government inspector does not relieve the Contractor from any contract requirement, nor is the inspector authorized to change any term or condition of the specification without the Contracting Officer's written authorization.

(e) The Contractor shall promptly furnish, at no increase in contract price, all facilities, labor, and material reasonably needed for performing such safe and convenient inspections and tests as may be required by the Contracting Officer. The Government may charge to the Contractor any additional cost of inspection or test when work is not ready at the time specified by the Contractor for inspection or test, or when prior rejection makes reinspection or retest necessary. The Government shall perform all inspections and tests in a manner that will not unnecessarily delay the work. Special, full size, and performance tests shall be performed as described in the contract.

(f) The Contractor shall, without charge, replace or correct work found by the Government not to conform to contract requirements, unless in the public interest the Government consents to accept the work with an appropriate adjustment in contract price. The Contractor shall promptly segregate and remove rejected material from the premises.

(g) If the Contractor does not promptly replace or correct rejected work, the Government may (1) by contract or otherwise, replace or correct the work and charge the cost to the Contractor or (2) terminate for default the Contractor's right to proceed.

(h) If, before acceptance of the entire work, the Government decides to examine already completed work by removing it or tearing it out, the Contractor, on request, shall promptly furnish all necessary facilities, labor, and material. If the work is found to be defective or nonconforming in any material respect due to the fault of the Contractor or its subcontractors, the Contractor shall defray the expenses of the examination and of satisfactory reconstruction. However, if the work is found to meet contract requirements, the Contracting Officer shall make an equitable adjustment for the additional services involved in the examination and reconstruction, including, if completion of the work was thereby delayed, an extension of time.

(i) Unless otherwise specified in the contract, the Government shall accept, as promptly as practicable after completion and inspection, all work required by the contract or that portion of the work the Contracting Officer determines can be accepted separately. Acceptance shall be final and conclusive except for latent defects, fraud, gross mistakes amounting to fraud, or the Government's rights under any warranty or guarantee.

(End of clause)

52.246-21 WARRANTY OF CONSTRUCTION (MAR 1994)

(a) In addition to any other warranties in this contract, the Contractor warrants, except as provided in paragraph (i) of this clause, that work performed under this contract conforms to the contract requirements and is free of any defect in equipment, material, or design furnished, or workmanship performed by the Contractor or any subcontractor or supplier at any tier.

(b) This warranty shall continue for a period of 1 year from the date of final acceptance of the work. If the Government takes possession of any part of the work before final acceptance, this warranty shall continue for a period of 1 year from the date the Government takes possession.

(c) The Contractor shall remedy at the Contractor's expense any failure to conform, or any defect. In addition, the Contractor shall remedy at the Contractor's expense any damage to Government-owned or controlled real or personal property, when that damage is the result of--

(1) The Contractor's failure to conform to contract requirements; or

(2) Any defect of equipment, material, workmanship, or design furnished.

(d) The Contractor shall restore any work damaged in fulfilling the terms and conditions of this clause. The Contractor's warranty with respect to work repaired or replaced will run for 1 year from the date of repair or replacement.

(e) The Contracting Officer shall notify the Contractor, in writing, within a reasonable time after the discovery of any failure, defect, or damage.

(f) If the Contractor fails to remedy any failure, defect, or damage within a reasonable time after receipt of notice, the Government shall have the right to replace, repair, or otherwise remedy the failure, defect, or damage at the Contractor's expense.

(g) With respect to all warranties, express or implied, from subcontractors, manufacturers, or suppliers for work performed and materials furnished under this contract, the Contractor shall--

(1) Obtain all warranties that would be given in normal commercial practice;

(2) Require all warranties to be executed, in writing, for the benefit of the Government, if directed by the Contracting Officer; and

(3) Enforce all warranties for the benefit of the Government, if directed by the Contracting Officer.

(h) In the event the Contractor's warranty under paragraph (b) of this clause has expired, the Government may bring suit at its expense to enforce a subcontractor's, manufacturer's, or supplier's warranty.

(i) Unless a defect is caused by the negligence of the Contractor or subcontractor or supplier at any tier, the Contractor shall not be liable for the repair of any defects of material or design furnished by the Government nor for the repair of any damage that results from any defect in Government-furnished material or design.

(j) This warranty shall not limit the Government's rights under the Inspection and Acceptance clause of this contract with respect to latent defects, gross mistakes, or fraud.

(End of clause)

52.249-4001 TIME EXTENSIONS FOR UNUSUALLY SEVERE WEATHER (APR 1991 OCE)
(Ref. FAR 52.249-10)

(a) This provision specifies the procedure for the determination of time extensions for unusually severe weather in accordance with the contract clause entitled DEFAULT (FIXED-PRICE CONSTRUCTION). In order for the Contracting Officer to award a time extension under this clause, the following conditions must be satisfied:

(1) The weather experienced at the project site during the contract period must be found to be unusually severe, that is, more severe than the adverse weather anticipated for the project location during any given month.

(2) The unusually severe weather must actually cause a delay to the completion of the project. The delay must be beyond the control and without the fault or negligence of the Contractor.

(b) The following schedule of monthly anticipated adverse weather delays is based on National Oceanic and Atmospheric Administration (NOAA) or similar data for the project location and will constitute the base line for monthly weather time evaluations. The Contractor's progress schedule must reflect these anticipated adverse weather delays in all weather dependent activities.

MONTHLY ANTICIPATED ADVERSE WEATHER DELAY
WORKDAYS BASED ON 5-DAY WORK WEEK

JAN	FEB	MAR	APR	MAY	JUN	JUL	AUG	SEP	OCT	NOV	DEC
10	9	6	4	4	6	8	7	4	4	5	9

(c) Upon acknowledgment of the Notice to Proceed and continuing through-out the contract, the Contractor will record on the daily Contractor Quality Control report the occurrence of adverse weather and resultant impact to normally scheduled work. Actual adverse weather delay days must prevent work on critical activities for 50 percent or more of the Contractor's scheduled workday. The number of actual adverse weather delay days shall include days impacted by actual adverse weather (even if adverse weather occurred in previous month), be calculated chronologically from the first to the last day in each month, and be recorded as full days. If the number of actual adverse weather delay days exceeds the number of days anticipated in paragraph (b) above, the Contracting Officer will convert any qualifying delays to calendar days, giving full consideration for equivalent fair weather workdays, and issue a modification in accordance with the contract clause entitled DEFAULT (FIXED PRICE CONSTRUCTION).
(End of clause)

52.249-5000 BASIS FOR SETTLEMENT OF PROPOSALS - EFARS

Actual costs will be used to determine equipment costs for a settlement proposal submitted on the total cost basis under FAR 49.206-2(b). In evaluating a terminations settlement proposal using the total cost basis, the following principles will be applied to determine allowable equipment costs:
Actual costs for each piece of equipment, or groups of similar serial or series equipment, need not be available in the contractor's accounting records to determine total actual equipment costs. If equipment costs have been allocated to a contract using predetermined rates , those charges will be adjusted to actual costs.

(3) Recorded job costs adjusted for unallowable expenses will be used to determine equipment operating expenses.

(4) Ownership costs (depreciation) will be determined using the contractor's depreciation schedule (subject to the provisions of FAR 31.205-11).

(5) License, taxes, storage and insurance costs are normally recovered as an indirect expense and unless the contractor charges these costs directly to contracts, they will be recovered through the indirect expense rate.
(End of Clause)

ATTACHMENT 1 TO SECTION 00800

LIST OF ATTACHMENTS

1. Contract Drawings:

File No. 125-977-02
Volume I - Sheets 1 through 197
Volume II - Sheets 1 through 63

2. Rates of Wages:

3. Formats:

Project Sign

Corps of Engineers Logo

Accident Prevention Plan (Ref. FAR 52.236-13 and EM 385-1-1)

Construction Quality Control Report

Small and Disadvantaged Business Subcontracting Plan

Weekly Temporary Electrical Inspection

4. Minimum Standard for Temporary Electrical Service (Ref. FAR 52.236-14)

5. Forms:

SAS Form 9 - Activity Hazard Analysis

SAD Form 1666a-R - Safety Checklist for Crawler, Truck & Wheel Mounted Cranes

SAD Form 1666b-R - Safety Checklist for Portal, Tower, and Pillar Cranes

SAD Form 1666c-R - Safety Checklist for Rigging

SAD Form 1666d-R - Safety Checklist for Motor Vehicles, Trailers and Trucks

SAD Form 1666e-R - Safety Checklist for Crawler Tractors and Dozers

SAD Form 1666f-R - Safety Checklist for Scrapers, Motor Graders, and Other Mobile Equipment

SAD Form 1666g-R - Safety Checklist for Material Hoists

SAD Form 1666h-R - Safety Checklist for Earth Drilling Equipment

ENG Form 4025 - Transmittal of Shop Drawings, Equipment Data, Material Samples, or Manufacturer's Certificates of Compliance

DA Form 5418-R - Cost Estimate Analysis

DD Form 1354 - Transfer and Acceptance of Military Real Property

Standard Form LLL-A - Disclosure of Lobbying Activities

Real Property Inventory

6. Contractor Prepared Network Analysis System

-- - --

General Decision Number NC020032

General Decision Number **NC020032**
Superseded General Decision No. NC010032
State: North Carolina
Construction Type:
BUILDING
County(ies):
CUMBERLAND
BUILDING CONSTRUCTION PROJECTS (does not include residential construction consisting of single family homes and apartments up to and including 4 stories).

Modification Number	Publication Date
0	03/01/2002

COUNTY(ies):
CUMBERLAND
SUNC1027A 10/24/1994

	Rates	Fringes
BRICKLAYERS/BLOCKLAYERS	12.50	
CARPENTERS (Including drywall hanging, acoustical tile installation and batt insulation	9.08	
CEMENT MASONS/CONCRETE FINISHERS	8.43	
ELECTRICIANS	9.71	
GLAZIERS	8.77	
HVAC MECHANIC (HVAC pipe only)	9.26	
INSULATORS (pipe)	10.42	.63
IRONWORKERS, STRUCTURAL	10.76	
LABORERS:		
Unskilled	6.23	
PAINTERS (Brush)	7.90	.04
PLUMBERS	10.28	
ROOFERS	6.75	
SHEET METAL WORKERS (Including HVAC Duct Work)	9.36	
SOFT FLOOR LAYERS/CARPET LAYERS	12.00	
TRUCK DRIVERS	7.10	

WELDERS - receive rate prescribed for craft performing operation to which welding is incidential.

Unlisted classifications needed for work not included within the scope of the classifications listed may be added after award only as provided in the labor standards contract clauses (29 CFR 5.5(a)(1)(v)).

In the listing above, the "SU" designation means that rates listed under that identifier do not reflect collectively bargained wage and fringe benefit rates. Other designations indicate unions whose rates have been determined to be prevailing.

WAGE DETERMINATION APPEALS PROCESS

1.) Has there been an initial decision in the matter? This can be:
* an existing published wage determination

* a survey underlying a wage determination
* a Wage and Hour Division letter setting forth a position on a wage determination matter
* a conformance (additional classification and rate) ruling

On survey related matters, initial contact, including requests for summaries of surveys, should be with the Wage and Hour Regional Office for the area in which the survey was conducted because those Regional Offices have responsibility for the Davis-Bacon survey program. If the response from this initial contact is not satisfactory, then the process described in 2.) and 3.) should be followed.

With regard to any other matter not yet ripe for the formal process described here, initial contact should be with the Branch of Construction Wage Determinations. Write to:

Branch of Construction Wage Determinations
Wage and Hour Division
U. S. Department of Labor
200 Constitution Avenue, N. W.
Washington, D. C. 20210

2.) If the answer to the question in 1.) is yes, then an interested party (those affected by the action) can request review and reconsideration from the Wage and Hour Administrator (See 29 CFR Part 1.8 and 29 CFR Part 7). Write to:

Wage and Hour Administrator
U.S. Department of Labor
200 Constitution Avenue, N. W.
Washington, D. C. 20210

The request should be accompanied by a full statement of the interested party's position and by any information (wage payment data, project description, area practice material, etc.) that the requestor considers relevant to the issue.

3.) If the decision of the Administrator is not favorable, an interested party may appeal directly to the Administrative Review Board (formerly the Wage Appeals Board). Write to:

Administrative Review Board
U. S. Department of Labor
200 Constitution Avenue, N. W.
Washington, D. C. 20210

4.) All decisions by the Administrative Review Board are final.

END OF GENERAL DECISION

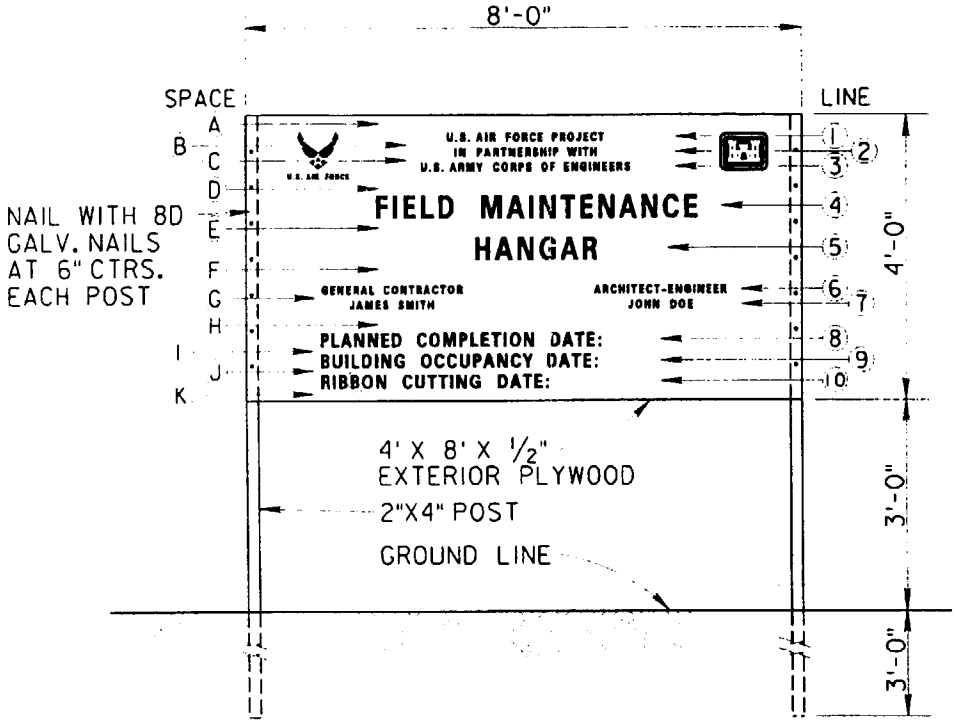

FRONT VIEW

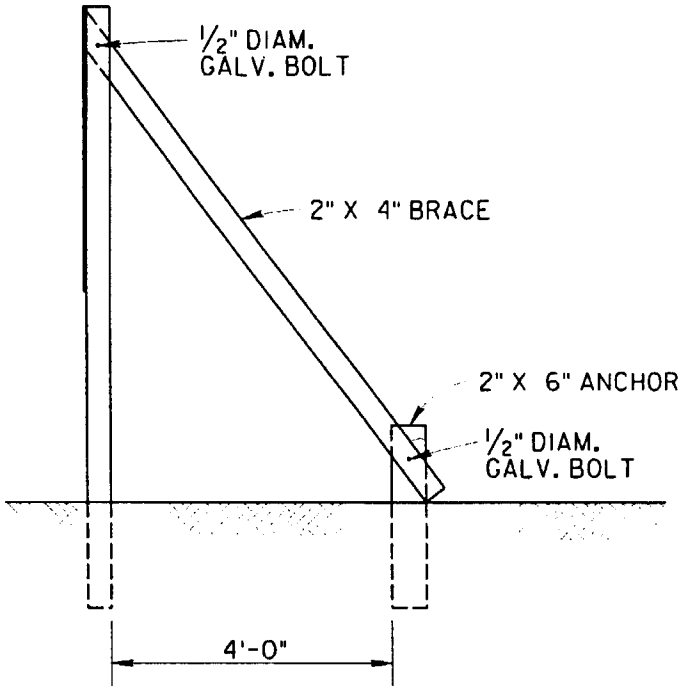

END VIEW

U.S. AIR FORCE PROJECT SIGN DETAILS

NOTES:

1. POSTS SHALL BE S4S.
2. PLYWOOD SHALL BE EXTERIOR TYPE, A-C GRADE.
3. BEFORE PAINTING, SURFACE SHALL BE CLEAN, DRY, FREE OF GREASE AND SANDED.
4. PAINT WITH ONE EXTERIOR OIL PRIME COAT AND EXTERIOR TYPE ALKYD, CONFORMING TO MASTER PAINTERS INSTITUTE MPI-9, MPI GLOSS LEVEL 6. COLOR SHALL MATCH SHERWIN WILLIAMS SW 2175.
5. ALL LETTERING SHALL BE EXTERIOR TYPE ALKYD. COLOR SHALL MATCH SHERWIN WILLIAMS SW 1900.
6. DECALOMANIA FOR CORPS OF ENGINEERS INSIGNIA AND U.S. AIR FORCE EMBLEM WILL BE FURNISHED BY THE CONTRACTING OFFICER FOR INSTALLATION BY THE CONTRACTOR.
7. ALL EXPOSED WOOD (POSTS, SUPPORTS, BACK, ETC.) SHALL BE PAINTED THE SAME BACKGROUND COLOR AS THE SIGN.
8. LETTERING STYLE SHALL BE EITHER HELIOS EXTRA BOLD CONDENSED, HELIOS BOLD II, HELVETICA BLACK ROMAN, OR HELVETICA BOLD ROMAN.

SCHEDULE

SPACE	HEIGHT	LINE	DESCRIPTION	LETTER HEIGHT	STROKE
A	3"	1	U.S. AIR FORCE PROJECT	1.5"	3/16"
B	1"	2	IN PARTNERSHIP WITH	1.5"	3/16"
C	1"	3	U.S. ARMY CORPS OF ENGINEERS	1.5"	3/16"
D	4"	4	PROJECT NAME	4"	1/2"
E	3"	5	PROJECT NAME CONT'D (IF REQ'D)	4"	1/2"
F	4"	6	GENERAL CONTRACTOR/A-E	1.5"	3/16"
G	1"	7	GENERAL CONTRACTOR/A-E	1.5"	3/16"
H	4"	8	PLANNED COMPLETION DATE	2.5"	1/4"
I	1"	9	BUILDING OCCUPANCY DATE	2.5"	1/4"
J	1"	10	RIBBON CUTTING DATE	2.5"	1/4"
K	2"				

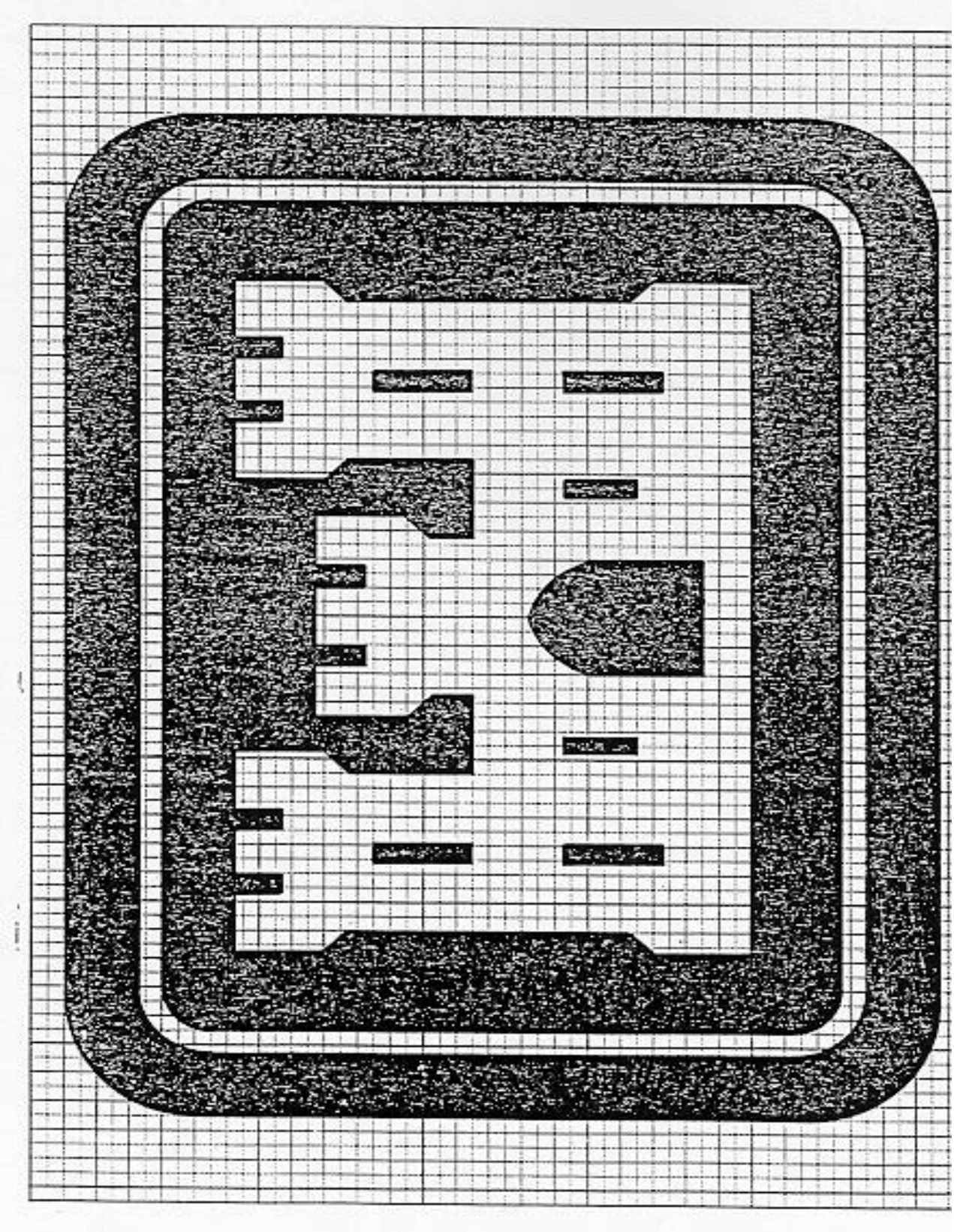

CORPS OF ENGINEERS LOGO
HALF SIZE

Last revised 9 May 97

FORMAT
(Ref. FAR 52.236-13 and EM 385-1-1 dated 3 Sep 96)
ACCIDENT PREVENTION PLAN

MINIMUM BASIC OUTLINE FOR ACCIDENT PREVENTION PLAN

An accident prevention plan is, in essence, a safety and health policy and program document. The following areas are typically addressed in an accident prevention plan, but a plan shall be job specific and shall also address any unusual or unique aspects of the project or activity for which it is written. The accident prevention plan shall interface with the employer's overall safety and health program. Any portions of the overall safety and health program that are referenced in the accident prevention plan shall be included as appropriate.

1. SIGNATURE SHEET. Title, signature, and phone number of the following:

a. Plan preparer (corporate safety staff person, QC);

b. Plan approval, e.g., owner, company president, regional vice president (HTRW activities require approval of a Certified Industrial Hygienist (or qualified Industrial Hygiene personnel for in-house USACE activities; a Certified Safety Professional (or qualified USACE safety personnel for in-house work) may approve the plan for operations involving UST removal where contaminants are known to be petroleum, oils, or lubricants);

c. Plan concurrence (provide concurrence of other applicable corporate and project personnel (contractor)), e.g., Corporate Chief of Operations, Corporate Chief of Safety, Corporate Industrial Hygienist, project manager or superintendent, project safety professional, project QC. The plan will be developed by qualified personnel (plan preparer) and will be signed by a competent person (plan concurrence) and a representative of the prime contractor's project management team (plan approval).

2. BACKGROUND INFORMATION. List the following:

a. Contractor;

b. Contract number;

c. Project name;

d. Brief project description, description of work to be performed, and location (map);

e. Contractor accident experience (provide information such as EMR, OSHA 200 Forms, corporate safety trend analyses);

f. Listing of phases of work and hazardous activities requiring activity hazards analyses.

3. STATEMENT OF SAFETY AND HEALTH POLICY. (In addition to the corporate policy statement, a copy of the corporate safety program may provide a

significant portion of the information required by the accident prevention plan.)

4. RESPONSIBILITIES AND LINES OF AUTHORITIES.

a. Identification and accountability of personnel responsible for safety - at both corporate and project level (contracts specifically requiring safety or industrial hygiene personnel should include a copy of their resume - the District Safety and Occupational Health Office will review the qualifications for acceptance). For items in EM 385-1-1 which require the use of a competent person or a qualified person, the contractor is to maintain documentation demonstrating the competence or qualification of that individual.

b. Lines of authority

5. SUBCONTRACTORS AND SUPPLIERS. Provide the following:

a. Identification of subcontractors and suppliers (if known);

b. Means for controlling and coordinating subcontractors and suppliers;

c. Safety responsibilities of subcontractors and suppliers.

6. TRAINING.

a. List subjects to be discussed with employees in safety indoctrination.

b. List mandatory training and certifications which are applicable to this project (e. g., explosive actuated tools, confined space entry, crane operator, diver, vehicle operator, HAZWOPER training and certification, personal protective equipment) and any requirements for periodic retraining/recertification.

c. Identify requirements for emergency response training.

d. Outline requirements (who attends, when given, who will conduct etc.) for supervisory and employee safety meetings.

e. Identify location at the project site where the records will be maintained.

7. SAFETY AND HEALTH INSPECTIONS. Provide details on:

a. Who will conduct safety inspections (e.g., project manager, safety professional, QC, supervisors, employees, etc.), when inspections will be conducted, how the inspections will be recorded, deficiency tracking system, follow-up procedures, etc;

b. Any external inspections/certifications which may be required (e.g., Coast Guard).

8. SAFETY AND HEALTH EXPECTATIONS, INCENTIVE PROGRAMS, AND COMPLIANCE.

a. The company's written safety program goals, objectives, and accident experience goals for this contract should be provided.

b. A brief description of the company's safety incentive programs (if any) should be provided.

c. Policies and procedures regarding noncompliance with safety requirements (to include disciplinary actions for violation of safety requirements) should be identified.

d. Provide written company procedures for holding managers and supervisors accountable for safety.

9. ACCIDENT REPORTING. The contractor shall identify who shall complete the following, how, and when:

a. Exposure data (man-hours worked);

b. Accident investigations, reports and logs;

c. Immediate notification of major accidents.

10. MEDICAL SUPPORT. Outline on-site medical support and off-site medical arrangements.

11. PERSONAL PROTECTIVE EQUIPMENT. Outline procedures (who, when, how) for conducting hazard assessments and written certifications for use of personal protective equipment.

12. PLANS (PROGRAMS, PROCEDURES) REQUIRED BY THE SAFETY MANUAL (as applicable).

a. Hazard communication program (01.B.04);

b. Emergency response plans:
- procedures and tests (01.E.01)
- spill plans (01.E.01, 06.A.02)
- fire fighting plan (01.E.01, 19.A.04)
- posting of emergency telephone numbers (01.E.04)
- wildfire prevention plan (09.K.01)
- man overboard/abandon ship (19.A.04)

c. Layout plans (04.A.01);

d. Respiratory protection plan (05.E.01);

e. Health hazard control program (06.A.02);

f. Lead abatement plan (06.B.05 & specifications);

g. Asbestos abatement plan (06.B.05 & specifications);

h. Abrasive blasting (06.H.01);

i. Confined space (06.1);

j. Hazardous energy control plan (12.A.07);

k. Critical lift procedures (16.C.17);

l. Contingency plan for severe weather (19.A.03);

m. Access and haul road plan (22.1.10);

n. Demolition plan (engineering and asbestos surveys) (23.A.01);

o. Emergency rescue (tunneling) (26.A.05);

p. Underground construction fire prevention and protection plan (26.D.01);

q. Compressed air plan (26.1.01);

r. Formwork and shoring erection and removal plans (27.B.02);

s. Lift slab plans (27.D.01);

t. SHP and SSHP (for HTRW work an SSHP must be submitted and shall contain all information required by the accident prevention plan - two documents are not required (28.B.01);

u. Blasting plan (29.A.01);

v. Diving plan (30.A.13);

w. Plan for prevention of alcohol and drug abuse (Defense Federal Acquisition Regulation Supplement Subpart 252.223-7004, Drug-Free Work Force).

13. The Contractor shall provide information on how they will meet the requirements of major sections of EM 385-1-1 in the accident prevention plan. Particular attention shall be paid to excavations, scaffolding, medical and first aid requirements, sanitation, personal protective equipment, fire prevention, machinery and mechanized equipment, electrical safety, public safety requirements, and chemical, physical agent, and biological occupational exposure prevention requirements. Detailed site-specific hazards and controls shall be provided in the activity hazard analysis for each phase of the operation. Site-specific hazards are those hazards which would be reasonably be anticipated to occur on the construction site of concern and will be identified through analysis of the activities to be performed. The controls are measures which will be implemented by the contractor to eliminate or reduce each hazard to an acceptable level.

F O R M A T

CONTRACTOR'S NAME
(Address)

CONSTRUCTION QUALITY CONTROL REPORT

Date: _____ Report No. _____

Contract No.: _____

Description and Location of Work: _____

WEATHER: (Clear)(P. Cloudy)(Cloudy); Temperature:___Min,___Max;
Rainfall ___Inches

Contractor/Subcontractors and Area of Responsibility
a._____
b._____
c._____
d._____
e._____
f._____
g._____
h._____

1. Work Performed Today:

(Indicate location and description of work performed. Refer to work performed by prime and/or subcontractors by letter in table above.)

_____

2. Results of Control Activities:

(Indicate whether: P-Preparatory, I-Initial, or F-Followup and include satisfactory work completed or deficiencies with action to be taken.)

_____

3. Test Required by Plans and/or Specifications Performed and Results of Tests:

_____

4. Monitoring of Materials and Equipment:

---

5. Offsite Surveillance Activities:

---

6. Job Safety:

(Daily comment required.)

---

7. Remarks:

a. (Cover any conflicts in plans, specifications or instructions.)

b. (Action taken in review of submittal.)

c. (Verbal instructions received.)

_____
Inspector

CONTRACTOR'S VERIFICATION:

The above report is complete and correct and all material and equipment used and work performed during this reporting period are in compliance with the contract plans and specifications except as noted above.

_____
Contractor's Approved
Authorized Representative

SAMPLE

SMALL AND DISADVANTAGED BUSINESS SUBCONTRACTING PLAN

BETTER BUILDERS, INC.

DATE: February 11, 2003

SOLICITATION NO. DACA21-0X-X-XXXX

TITLE: Barracks Complex, Fort Swampy, Georgia

Type of Work: Design and Construction

In accordance with applicable contract clauses of the solicitation noted above, Better Builders, Inc. submits the following Small Business Subcontracting Plan (includes small, veteran-owned small business, service-disabled veteran-owned small business, HUBZone small business, small disadvantaged business, and women-owned small business concerns).

It is company policy to follow all public laws including P.L. 99-661, Section 1207, P.L. 100-180, Section 806, P.L. 105-135 and P.L. 106-50. We have informed all purchasers to follow these laws in hiring subcontractors and buying materials.

1. The following goals (expressed in terms of percentages of the total dollars available for subcontract/purchase order award) would be applicable to a contract awarded under the cited solicitation. You must also provide the dollar amounts for each of the goals listed below.

    a. Total Proposed Contract Amount: $26,961,000

    b. Total amount available for Subcontract award: $18,300,000

    c. Large Business: $7,832,400 – 42.8%

    d. Total amount to be subcontracted to all small business: $10,467,600 - 57.2%

    e. Small Disadvantaged Business: $1,628,700 – 8.9%

    f. Women-Owned Small Business: $1,482,300 – 8.1%

    g. Service-Disabled Veteran-Owned Small Business: $549,000 - 3%

    h. HUBZone Small Business: $549,000 – 3%

i. There are no options in this solicitation. ***(NOTE: If there are options in the solicitation you must provide the same information as listed in paragraph 1 a-h for each option year/period.)***

j. Indirect and overhead costs have not been included in the goals specified in this section for amounts available for subcontract/purchase order award.

k. Consideration was given to HCBU/MI's but no opportunities were found to be included in the small disadvantaged business goals.

NOTE: While Savannah District does not have a specific goal for subcontracting with Veteran-Owned small business, it must be addressed in any subcontracting plan. However, FAR 52.219-9 requires a goal in your subcontracting plan for Veteran-Owned small business concerns.

2. The following principal products and/or services will be subcontracted under this contract, and the distribution among all small business concerns are as follows:

Large Business - Earthwork
Small Business - Windows and Storm Doors, Recreation, Site Utilities Plumbing
Veteran Owned Small Business – Materials, Equipment
Service Disabled Veteran Owned Small Business – Asphalt, Electrical, Doors
HUBZone Small Business - Window Treatment, HVAC, Concrete
Small Disadvantaged Business - Vinyl Siding, Insulation, Gutters
Women Owned Small Business – Carpentry, Ceramic Tile, Fencing

NOTE: Company names should be provided for each product and/or service listed.

The following method was used in developing our subcontracting goals: (1) all areas of potential subcontract work were determined to be available for subcontract award to all types of small business concerns, and (2) will be actively recruited for participation through the many sources described hereinafter.

3. The following individual will administer this Subcontract Plan on behalf of Better Builders, Inc.:

Name: Freddie Better Title: Executive Vice President

Address and Telephone Number: 4845 Tonka Drive
Fair Haven, CT 27413
800-621-4845

The individual's specific duties with regard to the conduct of our firm's Subcontracting Plan will include, but will not be limited to the following:

a. Developing and maintaining bidders lists of all types of small business concerns using sources such as the Pronet System developed by the Small Business Administration, the Minority Business Development Agency of the U.S. Department of Commerce, Local Minority Business Development Centers and Minority Contractor Associations, and the General Business Services Center in the project's Standard Metropolitan Statistical Area.

b. Assuring the inclusion of all types of small business concerns in all solicitations for products or services which they are capable of providing; and ensuring that all solicitations are structured to permit the maximum possible participation by all types of small business concerns.

c. Establishing and maintaining records of all solicitations and subcontract awards to all types of small business concerns to ensure that the members of the firm who review bidders proposals document their reasons for selecting or not selecting a bid.

d. Preparing and submitting the Subcontracting Report for Individual Contracts (SF 294) and the Summary Subcontract Report (SF 295) in accordance with the instructions provided on the forms, and coordinating and preparing for all compliance reviews by Federal agencies.

e. Conducting or arranging for all other activities necessary to further the intent and attainment of goals of the Plan to include motivational training of the firm's purchasing personnel attendance at workshop, seminars and trade fairs conducted by or on behalf of all types of small business concerns, and general cooperation with members of these concerns or their representatives.

4. The following steps will be taken to ensure that all types of small business concerns receive notice and have an equitable opportunity to compete for intended awards of subcontracts and/or purchase orders for the products and/or services described in paragraph 2 above:

a. Sources will be requested through the SBA's ProNet system, business development organizations, small business trade associations and at small business procurement conferences; sources will be contacted and bidding materials will be provided to all respond ing parties with interest.

b. Internally, motivational training will be conducted to guide and encourage purchasing personnel; source lists and guides to all types of small business concerns will be maintained and utilized by purchasing personnel while soliciting subcontracts and purchase orders; activities will be monitored to ensure sufficient time is allowed for interested bidders to prepare their bids and to evaluate continuing compliance with this Subcontracting Plan.

5. Better Builders, Inc. agrees that the clause entitled "Utilization of Small Business Concerns" will be included in all subcontracts which offer further subcontracting opportunities. All subcontractors, except small business concerns, who receive subcontracts in excess of $500,000 ($1,000,000 in the case of construction) will be required to adopt and comply with a subcontracting plan similar to this one. Such plans will be reviewed to assure that all minimum requirements of an acceptable subcontracting plan have been satisfied.

The acceptability of goals shall be determined on a case-by-case basis depending on the supplies/services involved, the availability of all potential small business and prior experience. Once approved and implemented, plans will be monitored through the submission of periodic reports or, as time and availability of funds permit, periodic visits to subcontractor's facilities to review applicable records and subcontracting program progress.

6. Better Builders, Inc. agrees to submit such periodic reports and cooperate in any studies or surveys as may be required by the Contracting agency or the Small Business Administration in order to determine the extent of compliance by the offeror with the subcontracting plan and with the clause entitled "Utilization of Small Business Concerns" contained in the solicitation.

7. Better Builders, Inc. agrees to maintain at least the following types of records to document compliance with this Subcontracting Plan:

a. The names of all organizations, agencies, and associations contacted for all small business sources, along with records of attendance at conferences, seminars and trade fairs where additional sources were developed.

b. Source lists, guides, and other data identifying all types of small business concerns

c. Records on all subcontract solicitations, on a contract-by-contract basis, indicating (1) whether all types of small business concerns were solicited, and if not, why not; and (2) the reasons for the failure of all solicited small businesses to receive a subcontract award.

d. Records of all subcontract award data, to include subcontractor's name and address, to be kept on a contract-by-contract basis.

e. Minutes of internal motivational and training meetings held for the guidance and encouragement of purchasing personnel, and records of all monitoring activities performed for compliance evaluation.

f. Copies of SF 294 and SF 295 showing date and place of filing and copies of all other reports or results of reviews conducted by the contracting agency or other interested agencies of the Federal government to monitor our compliance with this Subcontracting Plan.

In closing Better Builders, Inc. states that it will be the policy of Better Builders, Inc. to afford every practicable opportunity to all types of small business concerns to participate in construction contracts awarded to Better Builders, Inc. by the Federal Government to ensure that equitable opportunity is provided to all types of small business concerns to compete for award of subcontracts and purchase orders, and to diligently pursue the achievement of our goals by participation of all types of small business concerns in the dollars available for subcontract/purchase order award under the solicitation.

BY_____ DATE _____

_____
Signature

_____
Title, and Company Name

_____ DATE _____
Contract Specialist

Approval Recommended

_____ DATE _____
SADBU

Approve/Disapprove

_____ DATE _____
Contracting Officer

Approve/Disapprove

_____ DATE _____
Procurement Center Representative
Small Business Administration

WEEKLY TEMPORARY ELECTRICAL INSPECTION

Week ending _____

Contract No. _____

Contract Description _____

The following items were inspected in accordance with requirements in National Electrical Code and Corps of Engineers Safety and Health Requirements Manual, EM 385-1-1.

1. Wire (size, type, condition).

2. Systems and devices (polarity, continuity of ground, resistance to ground).

3. Resistance of ground rods (25 OHMS) measured and recorded.

4. Check GFI for 15/20 amp 120 volt circuits.

5. Plugs and receptacles (type, NEMA rating).

6. Circuit breakers and disconnect (size, type, weatherproof).

7. Extension cords (type, UL listed, insulation condition, splices, location).

8. Open wiring on insulators, nonmetallic sheathed cable, outside clearance (600 volts or less), Festoon lighting (as applicable).

_____

Signature Electrician/Electrical Engineer

MINIMUM STANDARD FOR TEMPORARY ELECTRICAL SERVICE

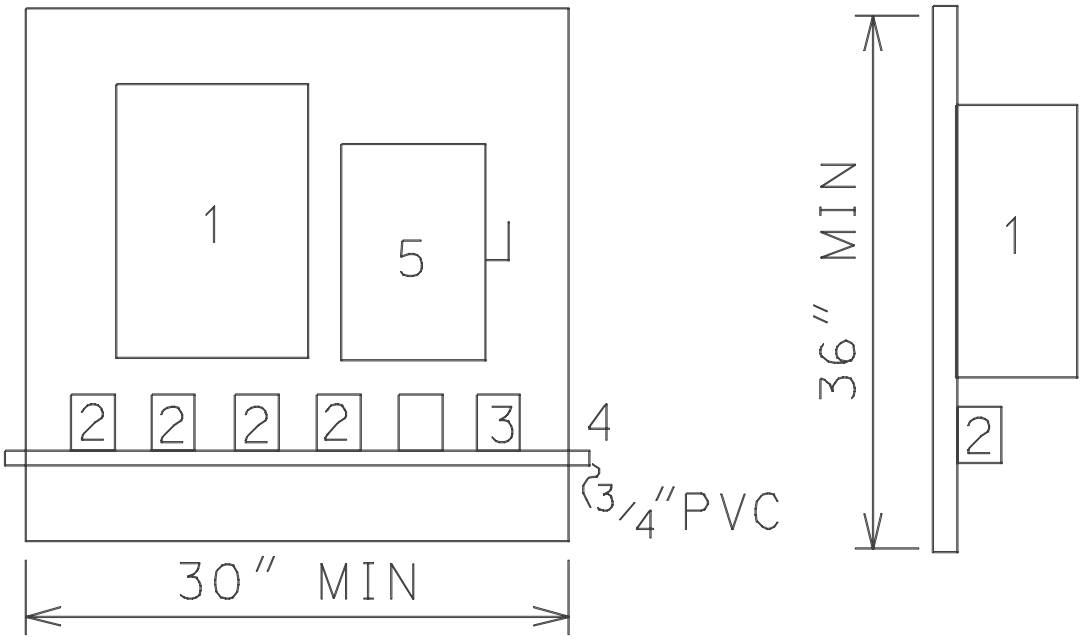

(DIMENSIONS ARE APPROXIMATE)

A. The backboard for temporary service shall consist of not less than 1/2 inch plywood of exterior grade.

B. Numbers above correspond to the item below:

Item 1 - NEMA 3R circuit breaker type panelboard. This panelboard shall consist of 1 two-pole 60 amp main circuit breaker, 4* one pole 20 AMP branch circuit breakers, and 1* two pole 20 AMP branch circuit breaker. Breakers shall meet Federal Specifications Standards for Class 1A breakers and shall be plug-in type. (*Number of breakers to be adjusted to suit the job requirements.)

Item 2 - Duplex grounding type convenience outlets in standard utility type outlet boxes with covers, meeting the NEC and NEMA requirements for wet locations. Connections to the branch circuit breakers shall be grounded by two conductors #12 NMC cable.

Item 3 – (Optional) A single three-conductor grounding type outlet rated for 250 volt service meeting the NEC and NEMA requirements for wet locations. Connections from this outlet to the two pole breaker shall be by two conductor grounded type NMC cable.

Item 4 - 3/4 inch PVC. This shall be used to support extension cords.

Item 5 – NEMA 3R service disconnect safety switch – 60 amp minimum.

C. The panelboard shall be grounded by #6 copper wire connected to a 3/4 inch by 10-foot long ground rod.

D. Service to the panel shall consist of three copper conductor #6 minimum service entrance cable. This cable may enter the top or side of the panelboard.

E. Periodic inspections of systems and devices will be made by the Contractor at intervals not to exceed 1 week, and a report will be submitted indicating the results.

F. All receptacle outlets that provide temporary electrical power during construction, remodeling, maintenance, repair, or demolition shall have ground-fault circuit-interrupter (CFCI) protection for personnel. GFCI protection shall be provided on all circuits serving portable electric hand tools or semi-portable electric power tools (such as block/brick saws, table saws, air compressors, welding machines, and drill presses). See EM 385-1-1 for exceptions.

G. Per EM 385-1-1 all temporary power distribution systems shall be submitted to the field office before installation.

ACTIVITY HAZARD ANALYSIS

1. Phase of Construction		
2. Location	3. Contract No.	4. Project
5. Prime Contractor	6. Date of Preparatory	7. Estimated Start Date
Potential Safety Hazard	Procedure to Control Hazard	
8. Contractor's Representative (signature)	9.	

SAS Form 9
1 Jan 82

SAFETY CHECKLIST FOR CRAWLER, TRUCK & WHEEL MOUNTED CRANES

Contract # and title:	
Equipment name & number: owned or leased?	
Contractor:	Subcontractor:
Contract Inspector:	Date inspected:

	Yes	No	N/A
1. Unless the manufacture has specified an on-rubber rating, outriggers will be fully extended and down? (16.D.10)			
2. Are lattice boom cranes equipped with a boom angle indicator, load indicating device, or a load moment indicator? (16.D.01)			
3. Are lattice boom and hydraulic cranes equipped with a means for the operator to visually determine levelness? (16.D.02)			
4. Are lattice boom and hydraulic cranes, except articulating booms cranes, equipped with drum rotation indicators located for use for the operator? (16.D.03)			
5. Are lattice boom and hydraulic mobile cranes equipped with a boom angle or radius indicator within the operator’s view? (16.D.04)			
6. Are lattice boom cranes, with exception of duty cycle cranes, equipped with an anti-two blocking device? (16.D.05)			
7. When duty cycle machines are required to make a non-duty lift, is the crane equipped with an international orange warning device and is a signal person present? (16.D 05)			
8. Are the following with the crane at all times: (16.C.02) a. the manufacturer’s operating manual? b. the load rating chart? c. the crane’s log book documenting use, maintenance, inspections and tests? d. operating manual for crane operator aids used on the crane.			

	Yes	No	N/A
9. Are the following on the project site: a. completed periodic inspection report prior to initial work? (16.C.12) b. pre-operational checklist used for daily inspection? (16.C.12) c. written reports of the operational performance test? (16.C.13) d. written reports of the load performance test? (16.C.13)			
10. Are all operators physically qualified to perform work? (16.C.05)			
11. Are all operators qualified by written and practical exam or by appropriate licensing agency for the type crane they are to operate? (16.C.05)			
12. Is the crane designed and constructed IAW the standards listed in Table 16-1? (16.C.06)			
13. Is a hazard analysis for set-up and set-down available? (16.C.08)			
14. Are accessible areas within the swing radius of the rear of the crane barricaded? (16.C.09)			
15. Are there at least 3 wraps of cable on the drum? (16.C.10)			
16. Are the hoisting ropes installed IAW the manufacturer’s recommendations? (16.C.10)			
17. Are critical lift plans available? (16.C.18)			
18. Are minimum clearance distance for high voltage lines posted at the operator’s position? (11.E.04)			
19. Do older lattice boom cranes with anti-two block warning devices in lieu of anti-two block prevention devices have a written exemption? (16.D.05)			
20. Is the slow moving emblem used on all vehicles which by design move at 25 MPH or less on public roads? (08.A.04)			
21. Are all vehicles which will be parked or moving slower than normal traffic on haul roads equipped with a yellow flashing light or flasher visible from all directions? (16.A.13)			

	Yes	No	N/A
22. Is all equipment to be operated on public roads provided with: (16A.07) a. headlights? b. brake lights? c. taillights? d. back-up lights? e. front and rear turn signals?			
23. Are seat and seat belts provided for the operator and each rider on equipment? (16.A.07 and 16.B.08)			
24. Is all equipment with windshields equipped with powered wipers and defogging or defrosting devices? (16.A.07)			
25. Is the glass in the windshield or other windows clear and unbroken to provide adequate protection and visiblity for the operator? (16.A.07, 16.B.10)			
26. Is all equipment equipped with adequate service brake system and emergency brake system? (16.A.18)			
27. Are areas on equipment where employees walk or climb equipped with platforms, footwalks, steps, handholds, guardrails, toeboards and non-slip surfaces? (16.B.03)			
28. Is all self propelled equipment equipped with automatic, audible, reverse signal alarms? (16.B.01)			
29. Is there a record of manufacturer’s approval of any modification of equipment which affects its capacity or safe operation? (16.A.18)			
30. Are truck and crawler cranes attached to a barge or pontoon by a slack tiedown system? (16.F.06)			
31. Have the following conditions been met for land cranes mounted on barges or pontoons: (16.F.04) a. Have load ratings been modified to reflect the increased loading from list, trim, wave, and wind action? b. Are all deck surfaces above the water? c. Is the entire bottom area of the barge or pontoon submerged? d. Are tie downs available? e. Are cranes blocked and secured?			
32. Are all belts, gears, shafts, spindles, drums, flywheels, or other rotating parts of equipment guarded where is a potential for exposure to workers? (16.B.03)			

	Yes	No	N/A
33. Is the area where the crane is to work level, firm and secured? (16.A.10)			
34. Is a dry chemical or carbon dioxide fire extinguisher rated at least 5-B:C on the crane? (16.A.26)			
35. Are trucks, for truck mounted cranes, equipped with a working reverse signal alarm? (16.B.01)			
36. Is a signal person provided where there is danger from swinging loads, buckets, booms, etc.? (16.B.13)			
37. Is there adequate clearance from overhead structures and electrical sources for the crane to be operated safely? (16.C.09)			
38. Is there adequate lighting for night operations? (16.C.19)			
39. Has the the boom stop test on cable-supported booms been performed? (16.D.06)			
40. Is the boom disenaging device functioning as required? (16.D.06)			
41. Has all rigging and wire rope been inspected? (Section 15)			
Remarks:(Enter actions taken for all “no” answers.)			
Contractor inspector signature			
Contractor QC/safety officer/project manager signature			

SAFETY CHECKLIST FOR PORTAL, TOWER, AND PILLAR CRANES

Contract # and Title:			
Equipment name & number: owned or leased?			
Contractor:	Subcontractor:		
Contract Inspector:	Date Inspected:		
	Yes	No	N/A
1. Are the following available: (16.E.02) a. written erection instructions? b. listing of the weight of each component? c. an activity hazard analysis for the erection? d. does the activity hazard analysis contain (1.) location of crane and adjacent structures? (2.) foundation design and construction requirements? (3.) clearance and bracing requirements?			
2. Is there a boom angle indicator within the operator's view? (16.E.04)			
3. Are luffing jib cranes equipped with: (16.E.05) a. shock absorbing jib stops? b. jib hoist limit switch? c. jib angle indicator visible to operator?			
4. If used, do rail clamps have slack between the point of attachment to the rail and the end fastened to the crane? (16E.06)			
5. Are the following with the crane at all times: (16.C.02) a. the manufacturer's operating manual? b. the load rating chart? c. the crane's log book documenting use, maintenance, inspections and tests? d. the operating manual for crane operational aids used on the crane?			

	Yes	No	N/A
6. Are the following on the project site: a. completed periodic inspection report prior to initial work? (16.C.12) b. pre-operational checklist used for daily inspections? (16.C.12) c. written reports of the operational performance tests? (16.C.13) d. written reports of the load performance tests? (16.C.13)			
7. Is every crane operator certified by a physician to be physically qualified to perform work? (16.C.05)			
8. Are all operators qualified by written and practical exam or by appropriate licensing agency for the type crane they are to operate? (16.C.05)			
9. Is the crane designed and constructed IAW the standards listed in Table 16-1? (16.C.05)			
10. Is a hazard analysis for set-up and set-down available? (16.C.08)			
11. Are there at least 3 wraps of cable on the drum? (16.C.10)			
12. Are the hoisting ropes installed IAW the manufacturer’s recommendations? (16.C.10)			
13. Is the a record of manufacturer’s approval of any modification of equipment which affects its capacity or safe operation? (16.A.07)			
5. Remarks: (Enter actions taken)			
Contractor inspector signature			
Contractor QC/safety officer/project manager signature			

SAFETY CHECKLIST FOR RIGGING

Contract # and title:			
Equipment name & number: owned or leased?			
Contractor	Subcontractor:		
Contractor inspector:	Date inspected:		
	Yes	No	N/A
1. Has all defective rigging been removed? (15.A.01)			
2. Is rigging stored properly? (15.A.01)			
3. Are running lines within 6.5’ of the ground or working level guarded? (15.A.03)			
4. Are all eye splices made in an approved manner with rope thimbles? (sling eyes excepted) (15.A.04)			
5. Are positive latching devices used to secure loads? (15.A.05)			
6. Are all custom lifting accessories marked to indicate their safe working loads? (15A.07)			
7. Are all custom designed lifting accessories proof-tested to 125% of their rated load? (15.A.07)			
8. Are the following conditions met for wire rope: (15.B.01-09) a. Are they free of rust or broken wires? b. Are defective ropes cut up or marked as unusable? c. Do rope clips attached with U-bolts have the U-bolts on the dead end or short end of the rope? d. Are protruding ends of strands in splices on slings and bridles covered or blunted? e. Except for eye splices in the end of wires and for all endless wire rope slings, are all wire ropes used in hoisting, lowering, or pulling loads one continuous piece, free of knots or splices?			

	Yes	No	N/A
f. Do all eye splices have at least 5 full tucks? g. If used, are wedge sockets fastening attached without attached the dead end of the wire rope to the live rope? h. Are they free of eyes or splices formed by wire rope clips or knots?			
9. Are the following conditions met for chain? (15.C.01-04) a. Are all chains alloyed? b. Do all coupling links or other attachments have rated capacities at least equal to that of the chain. c. Are makeshift fasteners restricted from use?			
10. Are the following conditions met for fiber rope:(15.D.01-07) a. Are all ropes protected from freezing, excessive heat or corrosive materials? b. Are all ropes protected from abrasion? c. Are splices made IAW manufacture's recommendations? d. Do all eye splices in manila rope contain at least 3 full tucks and do all short splices contain at least 6 full tucks(3 on each side of the centerline of the splice)? e. Do all splices in layed synthetic fiber rope contain at least 4 full tucks and do short splices contain at least 8 full tucks (4 on each side of the centerline of the splice)? f. Do the tails of fiber rope splices extend at least 6 rope diameters (for rope 1" diameter or greater) past the last full tuck? g. Are all eye splices large enough to provide an included angle of not greater than 60* at the splice when the eye is placed over the load or support?			
11. Are the following conditions met for all slings:(15.E.01-06) a. Is protection provided between the sling and sharp surfaces? b. Do all rope slings have minimum clear length of 40 times the diameter of component ropes between each end fitting or eye splice? c. Do all braided slings have a minimum clear length of 40 times the diameter of component ropes between each end fitting or eye splice?			

	Yes	No	N/A
d. Do all welded alloy steel chain slings have affixed permanent identification stating size, grade, rated capacity and manufacturer? e. Is each synthetic web sling marked or coded to identify its manufacturer, rated capacities for each type hitch and the type material?			
12. Are drums, sheaves, and pulley smooth and free of surface defects? (15.F.01)			
13. Is the ratio of the diameter of the rigging and the drum, block sheave or pulley thread diameter such that the rigging will adjust without excessive wear, deformation, or damage? (15F.02)			
14. Have all damaged drums, sheaves and pulleys been removed from service? (15.F.04)			
15. Are all connections, fittings, fastenings, and attachments of good quality, proper size and strength, and installed IAW manufacturer's recommendations? (15.F.05)			
16. Are all shackles and hooks sized properly? (15.F.06 & .07)			
17. Are hoisting hooks rated at 10 tons or greater provided with safe handling means? (15.F.07)			
18. Do all drums have sufficient rope capacity? (15.F.08)			
19. Is the drum end of the rope anchored by a clamp securely attached to the drum in a manner approved by the manufacturer? (15.F.08)			
20. Do grooved drums have the correct groove pitch for the diameter of the rope and is the groove depth correct? (15.F.08)			
21. Do the flanges on grooved drums project beyond the last layer of rope at a distance of either 2″ or twice the diameter of the rope, whichever is greater? (15.F.08)			
22. Do the flanges on ungrooved drums project beyond the last layer of rope a distance of either 2.5″ or twice the diameter of the rope, which ever is greater.			

	Yes	No	N/A
23. Are the sheaves compatible with the size of rope used and as specified by the manufacture? (15F.09)			
24. Are sheaves properly aligned, lubricated, and in good condition? (15.F.09)			
25. When rope is subject to riding or jumping off a sheave, are sheaves equipped with cablekeepers? 915.F.09)			
26. Are eye bolts loaded in the plane of the eye and at angles less than 45* to the horizontal? (15.F.10)			
27. Remarks: (Enter actions taken for “no” answers.)			
Contractor inspector signature			
Contractor QC/safety/project manager signature			

SAFETY CHECKLIST FOR MOTOR VEHICLES , TRAILERS AND TRUCKS

Contract # and title: owned or leased?	
Equipment name & number:	
Contractor:	Subcontractor:
Contractor inspector:	Date inspected:

	Yes	No	N/A
1. Are records of safety inspections of all vehicles available? (18.A.02)			
2. Are all vehicles to be operated between sunset and sunrise equipped with: (18.A.04) a. 2 headlights? b. taillights and brake lights? c. front and back turn signals? d. 3 emergency flares, reflective markers, or equivalent portable warning devices?			
3. Are vehicles, except trailers or semi-trailers having a gross weight of 5000 lbs or less, equipped with service brakes and manually operated parking brakes? (18.A.05)			
4. Are service brakes on trailers and semitrailers controlled from the driver’s seat of the prime mover? (18A.06)			
5. Does the vehicle have: (18.A.06) a. a speedometer? b. a fuel gage? c. an audible warning device (horn)? d. a windshield & adequate windshield wiper? e. an operable defroster and defogging device? f. an adequate rearview mirror? g. a cab, cab shield, and other protection to protect the driver from the elements and falling or shifting materials? h. non-slip surfaces on steps? I. a power-operated starting device?			

	Yes	No	N/A
6. Is all the glass safety glass and is all broken or cracked glass replace? (18.A.07)			
7. Do trailers meet the following: (18A.08) a. Are all towing devices adequate for the weight drawn? b. Are all towing devices properly mounted? c. Are locking devices or a double safety system provided on every 5th wheel mechanism and tow bar arrangement to prevent accidental separation? d. Are trailers coupled with safety chains or cables to the towing vehicle? e. Are trailers equipped with the power brakes equipped with a break-away device which will lock-up the brakes in the event the trailer separates from the towing vehicle?			
8. Are all dump trucks:(18.A.10) a. equipped with a holding device to prevent accidental lowering of the body? b. equipped with a hoist lever secured to prevent accidental starting or tipping? c. equipped with means to determine (from the operator’s position) if the dump box is lowered? d. equipped with trip handles for tailgates that allow the operator to be clear?			
9. Are all buses, trucks and combination of vehicles with a carrying capacity of 1.5 tons or more, to be operated on public roads equipped with: (18.A.11) a. 3 reflective markers? b. 2 wheel chocks for each vehicle? c. at least one 2A:10B:C fire extinguisher? d. at least two properly rated fire extinguishers (for vehicles carrying flammable cargo)? e. a red flag not less than 1 foot square.			
10. Is vehicle exhaust controlled so as not to present a hazard to personnel? (18.A.13)			
11. Are all rubber tired motor vehicles equipped with fenders or with mud flaps if the vehicle is not designed for fenders? (18.A.14)			

	Yes	No	N/A
12. Are all vehicles, except buses, equipped with seat belts? (18.B.02)			
13. Does all self-propelled construction and industrial equipment have a working reverse signal alarm? (16.B.01)			
14. Are all hot surfaces of equipment, including exhaust pipes or other lines, guarded or insulated to prevent injury or fire? (16.B.03)			
15. If an off the road vehicle, is it equipped with rollover protective structures? (16.B.12)			
16. Remarks: (Enter actions taken for “no” answers)			
Contractor inspector signature			
Contractor QC/safety officer/project manager signature			

SAFETY CHECKLIST FOR CRAWLER TRACTORS AND DOZERS

Contract # and title:	
Equipment name & number: owned or leased?	
Contractor:	Subcontractor:
Contractor inspector:	Date inspected:

	Yes	No	N/A
1. Are initial and daily/shift inspection records available? (16.A.01& .02)			
2. Are only qualified operators assigned to operate mechanized equipment? (16.A.04)			
3. Are sufficient lights provided for night operations? (16.A.11)			
4. Is the unit shut down before refueling? (16.A.14)			
5. Does the unit have as a minimum a 5-B:C fire extinguisher? (16.A.26)			
6. Is there an effective, working reverse alarm? (16.B.01)			
7. Are moving parts, shafts, sprockets, belts, etc., guarded? (16.B.03 ,07, and 13)			
8. Is protections against hot surfaces, exhausts, etc., provided? (16.B.03 and .13)			
9. Are fuel tanks located in a manner to prevent spills or overflows from running onto engine exhaust or electrical equipment?			

	Yes	No	N/A
10. Are exhaust discharges directed so they do not endanger person of obstruct operator vision?(16.B.05)			
11. Are seat belts provided? (16B.08)			
12. Is protection (grills, canopies, screens) provided to shield operator from falling or flying objects? (16.B.10 and .11)			
13. Is roll over protection provided? (16.B.12)			
14. Remarks: (Enter actions taken for “no” answers)			
Contractor inspector signature			
Contractor QC/safety officer/project manager signature			

SAFETY CHECKLIST FOR SCRAPERS, MOTOR GRADERS , AND OTHER MOBILE EQUIPMENT

Contract # and title:	
Equipment name and number: owned or leased?	
Contractor:	Subcontractor:
Contractor inspector:	Date inspected:

	Yes	No	N/A
1. Are initial and daily/shift inspection records available? (16.A.01 & .02)			
2. Are only qualified operators assigned to operate equipment? (16.A.04)			
3. Are sufficient lights provided for night operations? (16.A.11)			
4. Does the unit have as a minimum a 5-B:C fire extinguisher? (16.A.26)			
5. Is there an effective working reverse alarm? (16.B.01)			
6. Is the unit shut down for refueling? (16.A.14)			
7. Are moving parts, shafts, sprockets, belts, etc., guarded? (16.B.03, .07 and .13)			
8. Is protection against hot surfaces, exhausts, etc., provided? (16.B.03 and .13)			
9. Are fuel tanks located in a manner to prevent spills or overflow from running onto engine exhaust or electrical equipment? (16.B.04)			
10. Are exhaust discharges directed so they do not endanger persons or obstruct operator vision? (16.B.05)			

	Yes	No	N/A
11. Are seat belts provided for each person required to ride on the equipment? (16.B.08)			
12. Is protection (grills, canopies, screens) provided to shield operators from falling or flying objects? (16.B.10 and .11)			
13. Is roll over protection provided? (16.B.12)			
14. Is a safe means of access to the cab provided (steps, grab bars, non-slip surfaces)? (16.B.03)_			
15. Are adequate head and tail lights provided? (16.A.07)			
16. Have brakes been tested and found satisfactory? (16.A.07)			
17. Does the unit have an emergency brake which will automatically stop the equipment upon brake failure? Is this system manually operable from the drivers position? (16.A.07)			
18. Is all equipment with windshields equipped with powered wipers and defogging or defrosting system? (16.A.07)			
19. Are all vehicles which will be parked or moving slower than normal traffic on haul roads equipped with a yellow flashing light or flasher visible from all directions? (16.A.13)			
20. Is the slow moving emblem used on all vehicles which by design move at 25 MPH or less on public roads? (08A.04)			

	Yes	No	N/A
21. Have air tanks been tested and certified? (20.A.01)			
22. Is an air pressure gage in working condition installed on the unit? (20.A.12)			
23. Does the air tank have an accessible drain valve? (20.B.17)			
24. Remarks: (Enter action taken for all “no” answers)			
Contractor inspector signature			
Contractor QC/safety officer/project manager			

SAFETY CHECKLIST FOR MATERIAL HOISTS

Contract # and title:	
Equipment name & number:	
Contractor:	Subcontractor:
Contract Inspector:	Date inspected:

	Yes	No	N/A
1. Are all hoist towers, masts, guys or braces, counterweights, drive machinery supports, sheave supports, platforms, supporting structures, and accessories designed by a licensed engineer? (16.K.02)			
2. Is a copy of the hoist operating manual available? (16.K.04)			
3. Do all floors and platforms have slip-resistant surfaces? (16.K.08)			
4. Are landings and runways adequately barricaded and is overhead protection provided where needed? (16.K.08)			
5. Are hoisting ropes installed IAW manufacturer's instructions? (16.K.10)			
6. Are operating rules posted at the hoist operator's station? (16.K.14)			
7. Are air powered hoists connected to an air supply of sufficient capacity and pressure to safely operate the hoist? (16.K.15)			
8. Are pneumatic hoses secured by some positive means to prevent accidental disconnection? (16.K.15)			
9. Remarks: (Enter actions taken for all "no" answers.)			
Contractor inspector signature			
Contractor QC/safety officer/project manager signature			

SAD Form 1666g-R Mar 97 Previous editions may be used for contracts referencing the 1992 edition of EM 385-1-1.

SAFETY CHECKLIST FOR EARTH DRILLING EQUIPMENT

Contract # and title:	
Equipment name & number:	
Contractor:	Subcontractor:
Contractor inspector:	Date inspected:

	Yes	No	N/A
1. Is a copy of the manual for all drilling equipment available? (16.M.01)			
2. Have all overhead electrical hazards and potential ground hazards been identified in a site layout plan and addressed in an activity hazard analysis? (16.M.02)			
3. Are MSDSs for all drilling fluids available? (16.M.05)			
4. Does the drilling equipment have 2 easily accessible emergency shut down devices (one for the operator and one for the helper)? (16.M.06)			
5. Is the equipment posted with a warning of electrical hazards? (16.M.06)			
6. Is there a spotter or an electrical proximity warning device available to ensure safe distances from power lines are maintained? (16.M.06)			
7. Remarks: (Enter actions taken for “no” answers)			
Contractor inspector signature			
Contractor QC/safety officer/project manager			

SAD Form 1666h-R Mar 97 Previous editions may be used for contracts referencing the 1992 edition of EM 385-1-1.

TRANSMITTAL OF SHOP DRAWINGS, EQUIPMENT DATA, MATERIAL SAMPLES, OR MANUFACTURER'S CERTIFICATES OF COMPLIANCE *(Read instructions on the reverse side prior to initiating this form)*	DATE	TRANSMITTAL NO.

SECTION I - REQUEST FOR APPROVAL OF THE FOLLOWING ITEMS *(This section will be initiated by the contractor)*

TO:	FROM:	CONTRACT NO.	CHECK ONE: ☐ THIS IS A NEW TRANSMITTAL ☐ THIS IS A RESUBMITTAL OF TRANSMITTAL _____
SPECIFICATION SEC. NO. *(Cover only one section with each transmittal)*	PROJECT TITLE AND LOCATION		CHECK ONE: THIS TRANSMITTAL IS FOR ☐ FIO ☐ GOV'T. APPROVAL

ITEM NO. *a.*	DESCRIPTION OF ITEM SUBMITTED *(Type size, model number/etc.)* *b.*	MFG OR CONTR. CAT., CURVE DRAWING OR BROCHURE NO. *(See instruction no. 8)* *c.*	NO. OF COPIES *d.*	CONTRACT REFERENCE DOCUMENT		FOR CONTRACTOR USE CODE *g.*	VARIATION *(See instruction No. 6)* *h.*	FOR CE USE CODE *i.*
				SPEC. PARA. NO. *e.*	DRAWING SHEET NO. *f.*			

REMARKS	I certify that the above submitted items have been reviewed in detail and are correct and in strict conformance with the contract drawings and specifications except as other wise stated. NAME AND SIGNATURE OF CONTRACTOR

SECTION II - APPROVAL ACTION

ENCLOSURES RETURNED *(List by Item No.)*	NAME, TITLE AND SIGNATURE OF APPROVING AUTHORITY	DATE

INSTRUCTIONS

1. Section I will be initiated by the Contractor in the required number of copies.

2. Each transmittal shall be numbered consecutively in the space provided for "Transmittal No.". This number, in addition to the contract number, will form a serial number for identifying each submittal. For new submittals or resubmittals mark the appropriate box; on resubmittals, insert transmittal number of last submission as well as the new submittal number.

3. The "Item No." will be the same "Item No." as indicated on ENG FORM 4288-R for each entry on this form.

4. Submittals requiring expeditious handling will be submitted on a separate form.

5. Separate transmittal form will be used for submittals under separate sections of the specifications.

6. A check shall be placed in the "Variation" column when a submittal is not in accordance with the plans and specifications--also, a written statement to that effect shall be included in the space provided for "Remarks".

7. Form is self-transmittal, letter of transmittal is not required.

8. When a sample of material or Manufacturer's Certificate of Compliance is transmitted, indicate "Sample" or "Certificate" in column c, Section I.

9. U.S. Army Corps of Engineers approving authority will assign action codes as indicated below in space provided in Section I, column i to each item submitted. In addition they will ensure enclosures are indicated and attached to the form prior to return to the contractor. The Contractor will assign action codes as indicated below in Section I, column g, to each item submitted.

THE FOLLOWING ACTION CODES ARE GIVEN TO ITEMS SUBMITTED

A -- Approved as submitted.

B -- Approved, except as noted on drawings.

C -- Approved, except as noted on drawings.
Refer to attached sheet resubmission required.

D -- Will be returned by separate correspondence.

E -- Disapproved (See attached).

F -- Receipt acknowledged.

FX -- Receipt acknowledged, does not comply as noted with contract requirements.

G -- Other *(Specify)*

10. Approval of items does not relieve the contractor from complying with all the requirements of the contract plans and specifications.

(Reverse of ENG Form 4025-R)

COST ESTIMATE ANALYSIS

For use of this form, see TM 5-800-2; the proponent agency is USACE.

PROJECT	INVITATION/CONTRACTOR	EFFECTIVE PRICING DATE	DATE PREPARED
LOCATION	CODE (Check one) ☐ A ☐ B ☐ C ☐ OTHER	DRAWING NO.	SHEET OF SHEETS
		ESTIMATOR	CHECKED BY

TASK DESCRIPTION	QUANTITY		LABOR				EQUIPMENT		MATERIAL		TOTAL	SHIPPING	
	NO. OF UNITS	UNIT MEAS	MH UNIT	TOTAL HRS	UNIT PRICE	COST	UNIT PRICE	COST	UNIT PRICE	COST		UNIT WT	TOTAL WT
TOTAL THIS SHEET													

DA FORM 5418-R, Apr 85

TRANSFER AND ACCEPTANCE OF MILITARY REAL PROPERTY

Form Approved
OMB No. 0704-0188

PAGE OF PAGES

Public reporting burden for this collection of information is estimated to average 30 minutes per response, including the time for reviewing instructions, searching existing data sources, gathering and maintaining the data needed, and completing and reviewing the collection of information. Send comments regarding this burden estimate or any other aspect of this collection of information, including suggestions for reducing this burden, to Washington Headquarters Services, Directorate for Information Operations and Reports, 1215 Jefferson Davis Highway, Suite 1204, Arlington, Va 22202-4302, and to the Office of Management and Budget, Paperwork Reduction Project (0704-0188), Washington, DC 20503.

1. **FROM** *(Installation/Activity/Service and Zip code)*	2. OPERATING UNIT	3. DISTRICT CODE	4. OPERATING AGENCY	5. DATE	6. JOB NUMBER	7. SERIAL NUMBER	8. CONTRACT NUMBER

9. **TO** *(Installation/Activity/Service and Zip code)*	10. OPERATING UNIT	11. DISTRICT CODE	12. OPERATING AGENCY	13. ACCOUNTING NUMBER	14. ACCOUNTABLE OFFICE NUMBER	15. TYPE OF TRANSACTION		16. PROJECT NUMBER
						A. ☐ NEW CONSTR. ☐ EXISTING FAC. ☐ CAPITAL IMP. ☐ OTHER *(Specify)*	B. ☐ BENF/O ☐ PHYSICAL COM. ☐ FINAN. COM. ☐ OTHER *(Specify)*	

ITEM NO. 17	CATEGORY CODE 18	FACILITY *(Category description)* 19	NO. OF UNITS 20	TYPE 21	UNIT OF MEAS. 22	TOTAL QUANTITY 23	COST 24	DRAWING NUMBERS 25	REMARKS 26

27.		28. ACCEPTED BY *(Signature)*	DATE
TRANSFERRED BY *(Signature)*	DATE	TITLE *(Post Engr./Base Civ. Engr./Navy Rep.)*	29. PROPERTY VOUCHER NUMBER
TITLE *(Area Engr./Base Engr./DPWO)*			

30. CONSTRUCTION DEFICIENCIES

31. REMARKS

INSTRUCTIONS

This form has been designed and issued for use in connection with the transfer of military real property between the military departments and to or from other government agencies. It supersedes ENG Forms 290 and 290B (formerly used by the Army and Air Force) and NAVDOCKS Form 2317 (formerly used by the Navy).

Existing instructions issued by the military departments relative to the preparation of the three superseded forms are applicable to this form to the extent that the various items and columns on the superseded forms have been retained. Additional instructions, as appropriate, will be promulgated by the military departments in connection with any new items appearing hereon.

With the issuance of this DD form, it is not intended that the departments shall revise and reprint manuals and directives simply to show the number of this DD form. Such action can be accomplished through the normal course of revision for other reasons.

Approved by OM 0348-0046

DISCLOSURE OF LOBBYING ACTIVITIES

Complete this form to disclose lobbying activities pursuant to 31 U.S.C. 1352
(See reverse for public burden disclosure.)

1. Type of Federal Action:

☐ a. contract
b. grant
c. cooperative agreement
d. loan
e. loan guarantee
f. loan insurance

2. Status of Federal Action:

☐ a. bid/offer/application
b. initial award
c. post-award

3. Report Type:

☐ a. initial filing
b. material change

For Material Change Only:
year _____ quarter _____
date of last report _____

4. Name and Address of Reporting Entity:

☐ Prime ☐ Subawardee
Tier _____, *if known*:

Congressional District, *if known:*

5. If Reporting Entity in No. 4 is Subawardee, Enter Name and Address of Prime:

Congressional District, *if known*:

6. Federal Department/Agency:

7. Federal Program Name/Description:

CFDA Number, *if applicable*: _____

8. Federal Action Number, *if known*:

9. Award Amount, *if known*:

$

10. a. Name and Address of Lobbying Entity
(*if individual, last name, first name, MI):*

b. Individuals Performing Services *(including address if different from No. 10a)*
(last name, first name, MI):

(attach Continuation Sheet(s) SF-LLL-A, *if necessary*)

11. Amount of Payment *(check all that apply)*:

$ _____ ☐ actual ☐ planned

12. Form of Payment *(check all that apply)*:

☐ a. cash
☐ b. in-kind; specify: nature _____
value _____

13. Type of Payment *(check all that apply)*:

☐ a. retainer
☐ b. one-time fee
☐ c. commission
☐ d. contingent fee
☐ e. deferred
☐ f. other; specify: _____

14. Brief Description of Services Performed or to be Performed and Date(s) of Service, including officer(s), employee(s), or Member(s) contacted, for Payment indicated in Item 11:

(attach Continuation Sheet(s) SF-LLL-A, *if necessary*)

15. Continuation Sheet(s) SF-LLL-A attached: ☐ Yes ☐ No

16. Information requested through this form is authorized by title 31 U.S.C section 1352. This disclosure of lobbyig activities is a materia representation of fact upon which reliance was placed by the tier above when this transaction was made or entered into. This disclosure is required pursuant to 31 U.S.C. 1352 . This information will be reported to the Congress semi-annually and will be available for public inspection. Any person who fails to

Signature: _____

Print Name: _____

Title: _____

Telephone No.: _____ **Date:** _____

Federal Use Only:

Authorized for Local Reproduction

INSTRUCTIONS FOR COMPLETION OF SF-LLL, DISCLOSURE OF LOBBYING ACTIVITIES

This disclosure form shall be completed by the reporting entity, whether subawardee or prime Federal recipient, at the initiation or receipt of a covered Federal action, or a material change to a previous filing, pursuant to title 31 U.S.C. section 1352. The filing of a form is required for each payment or agreement to make payment to any lobbying entity for influencing or attempting to influence an officer or employee of any agency, a Member of Congress, an officer or employee of Congress, or an employee of a member of Congress in connection with a covered Federal action. Use the SF-LLL-A Continuation Sheet for additional information if the space on the form is inadequate. Complete all items that apply for both the initial filing and material change report. Refer to the implementing guidance published by the Office of Management and Budget for additional information.

1. Identify the type of covered Federal action for which lobbying activity is and/or has been secured to influence the outcome of a covered Federal action.

2. Identify the status of the covered Federal action.

3. Identify the appropriate classification of this report. If this is a followup report caused by a material change to the information previously reported, enter the year and quarter in which the change occurred. Enter the date of the last previously submitted report by this reporting entity for this covered Federal action.

4. Enter the full name, address, city, state and zip code of the reporting entity. Include Congressional District, if known. Check the appropriate classification of the reporting entity that designates if it is, or expects to be, a prime or subaward recipient. Identify the tier of the subawardee, e.g., the first subawardee of the prime is the 1st tier. Subawards include but are not limited to subcontracts, subgrants and contract awards under grants.

5. If the organization filing the report in item 4 checks “Subawardee”, then enter the full name, address, city, state and zip code of the prime Federal recipient. Include Congressional District, if known.

6. Enter the name of the Federal agency making the award or loan commitment. Include at least one organizational level below agency name, if known. For example, Department of Transportation, United States Coast Guard.

7. Enter the Federal program name or description for the covered Federal action (item 1). If known, enter the full Catalog of Federal Domestic Assistance (CFDA) number for grants, cooperative agreements, loans, and loan commitments.

8. Enter the most appropriate Federal identifying number available for the Federal action identified in item 1 (e.g., Request for Proposal (RFP) number; Invitation for Bid (IFB) number; grant announcement number; the contract, grant, or loan award number; the application/proposal control number assigned by the Federal agency). Include prefixes, e.g., “RFP-DE-90-001.”

9. For a covered Federal action where there has been an award or loan commitment by the Federal agency, enter the Federal amount of the award/loan commitment for the prime entity identified in item 4 or 5.

10. (a) Enter the full name, address, city, state and zip code of the lobbying entity engaged by the reporting entity identified in item 4 to influence the covered Federal action.

    (b) Enter the full names of the individuals(s) performing services, and include full address if different from 10 (a). Enter Last Name, First Name, and Middle Initial (MI).

11. Enter the amount of compensation paid or reasonably expected to be paid by the reporting entity (item 4) to the lobbying entity (item 10). Indicate whether the payment has been made (actual) or will be made (planned). Check all boxes that apply. If this is a material change report, enter the cumulative amount of payment made or planned to be made.

12. Check the appropriate box(es). Check all boxes that apply. If payment is made through an in-kind contribution, specify the nature and value of the in-kind payment.

13. Check the appropriate box(es). Check all boxes that apply. If other, specify nature.

    Provide a specific and detailed description of the services that the lobbyist has performed, or will be expected to perform, and the date(s) of any services rendered. Include all preparatory and related activity, not just time spent in

Public reporting burden for this collection of information is estimated to average 30 minutes per response, including time for reviewing instructions, searching existing data sources, gathering and maintaining the data needed, and completing and reviewing the collection of information. Send comments regarding the burden estimate or any other aspect of this collection of information, including suggestions for reducing this burden, to the Office of Management and Budget, Paperwork Reduction Project (0348-0046), Washington, D.C. 20503.

DISCLOSURE OF LOBBYING ACTIVITIES
CONTINUATION SHEET

Approved by OM
0348-0046

Reporting Entity: _____ Page ____ of ____ ____

*U.S. G.P.O. 1990-260-708:00012

REAL PROPERTY INVENTORY

ITEM	TALLY	TOTAL
COMMODES		
LAVATORIES		
URINALS		
EXHAUST FAN (9")		
EXHAUST FAN (OTHER)		
WATER COOLER		
HOTWATER HEATER		
MOP SINK		
AC PLANT	LS 5 TN. 5-25 TN. 25-100 TN. OVER 100 TN.	
AS (WINDOW TYPE)		
FIRE ALARM SYSTEM	MANUAL HALON SPRINKLER	
EMERGENCY LIGHTS		
UNIT HEATER		
STRIP HEATER		
COOLING TOWER		
WALK-IN COOLER		
AIR CURTAIN		
EYE WASH		
SHOWERS		
BOILER	GAS FIRED OIL FIRED STEAM	
FUEL TANK	UNDERGROUND OUTSIDE	

REAL PROPERTY INVENTORY

ITEM	TALLY	TOTAL
WASH BASIN		
AIR COMPRESSOR		
HOISTS		
INVENTORY BY:		DATA:
RECONCILED BY:		DATA:

REAL PROPERTY INVENTORY

ITEM	TALLY	TOTAL
INVENTORIED BY:		DATE:
RECONCILED BY:		DATE:

4 Sept 01 Revision

POL STORAGE COMPLEX, POPE AFB, NC

CONTRACTOR PREPARED NETWORK ANALYSIS SYSTEM (NAS)— PROJECT SCHEDULE
(SAS May 01)

A. REFERENCES

The publications listed below form a part of the specification to the extent referenced. The publication is referenced in the text by basic designation only.

ER 1-1-11 Progress, Schedules, and Network Analysis Systems (June 1995)

B. CONTRACTOR SCHEDULING REPRESENTATIVE

The Contractor shall designate a scheduling representative (the individual tasked with the responsibility for preparation-updating-revision of the NAS schedule) who shall be responsible for the preparation and submittal of the entire NAS project schedule including all items specified below and revisions to the schedule or supplemental completion schedules, as applicable or directed by the Contracting Officer. The scheduling representative shall be approved by the Contracting Officer based on a resume indicating as a minimum, formal training from software vendor or 5 years' experience in working with NAS schedules.

C. GENERAL REQUIREMENTS

Pursuant to the Contract Clause, SCHEDULES FOR CONSTRUCTION CONTRACTS, FAR 52.236-15 the Contractor shall prepare the NAS Project Schedule as described below. The scheduling of construction shall be the responsibility of the Contractor. Contractor management and superintendent personnel shall actively participate in its development. Subcontractors and suppliers working on the project should actively participate in developing and maintaining an accurate NAS Project Schedule and the prime Contractor shall verify their support for the submitted schedule in writing. The Contractor shall include this written verification with the initial submittal and all revisions (to logic and durations) of the NAS schedule. The approved NAS Project Schedule shall be used by the Contractor to plan and control the progress of the work, perform evaluations of actual progress, perform time analysis for requests of time extensions on changes, and to provide the basis for the request of all progress payments.

The Government will use the NAS Project Schedule to evaluate the Contractor's progress for timely completion, plan for Quality Assurance verification of the work and evaluate the effects of a proposed modification on the contract duration (critical path activities).

D. BASIS FOR PAYMENT

The approved schedule shall be the basis for progress payments. Lack of an approved schedule or scheduling personnel will result in an inability of the Contracting Officer to evaluate Contractor's progress, may delay progress payments and may result in an interim unsatisfactory performance rating for the area of effectiveness of management. The Contractor shall provide all information/data, as specified below, for the Contracting Officer to evaluate Contractor progress for payment purposes. The Contracting Officer may hold retainage up to the maximum allowed by contract, each payment period, for failure to provide information and data required in this specification.

E. PROJECT SCHEDULE

E.1 Project Schedule Software

The Contractor shall prepare the NAS schedule using a computer software system. The system utilized by the Contractor shall be capable of satisfying all requirements of this specification and ER 1-1-11. Manual methods used to produce any required information shall require prior approval by the Contracting Officer. The Contracting Officer intends to use PRIMAVERA P3. (Should the Contractor utilize software that is different than that utilized by the Contracting Officer, based on the software utilized by the Contractor for the preparation of the NAS schedule, the Contractor shall provide a copy of the software and a license to the Administrative Contracting Officer at the Government field office until final payment. The software and license shall be returned to the Contractor. The Contractor shall submit a copy of the user's manual outlining the selected CPM computer program's mathematical analysis capabilities, details, functions and operation.) The Contractor shall provide to the Government a complete input listing for the initial schedule. The selected software must be able to function so as to provide all information and functions required by this specification in an accessible manner acceptable to the Contracting Officer. The Government’s acceptance of the software does not waive any requirements under this specification and shall not require the Government to go to any significant effort to retrieve the required information.

The NAS schedule shall be prepared in the Standard Data Exchange Format as required in ER 1-1-11 and approved by the Contracting Officer.

E.2 Use of the Critical Path Method

The Critical Path Method (CPM) of network calculation shall be used to generate the Project Schedule. The Contractor shall provide the Project schedule in the Precedence Diagram Method (PDM).

E.2.1 Level of Detail Required

The Contractor shall develop or update the Project Schedule and provide data to the Contracting officer at the appropriate level of detail necessary to properly evaluate progress as approved by the Contracting Officer.

E.2.2 Activity Durations

Contractor submissions shall follow the direction of the Contracting Officer regarding reasonable activity durations. Reasonable durations are those that allow the progress of activities to be accurately determined between payment periods (usually less than 2 percent of all non-procurement activities’ original durations should be greater than 20 work days).

E.2.3 Key Procurement Activities

Tasks related to the procurement of long lead materials or equipment shall be included as separate activities in the project schedule. Long lead materials and equipment are those materials that have a procurement cycle of over 90 days. Examples of key procurement activities include, but are not limited to: shop drawing submittals/ approvals or review/and fabrication/delivery.

E.2.4 Government Activities

Government and other agency activities that could impact progress shall be included in the schedule. These activities include, but are not limited to: Government approvals, inspections, utility tie-in, Government Furnished

Equipment (GFE) and Notice to Proceed (NTP) for phasing requirements. Government approval of shop drawings activities should be shown with the duration at least the minimum allowed by the contract. The Contractor's failure to provide reasonable durations in its schedule for Government activities does not establish or change the Government's review or approval periods and the durations established for Government's activities are subject to approval by the Contracting Officer.

E.2.5 Contracts With Multiple Buildings/Facilities

The Contractor shall prepare a separate detailed NAS schedule for each building/facility indicating its critical path for specified interim completion dates or critical milestone date. The master NAS schedule shall indicate the interface/lag/link between buildings/facilities to maximize/level the labor and other resources. The master schedule critical path must be indicated through the various buildings/facilities and total duration equal to the contract duration.

E.3 Project NAS Schedule Submissions

The Contractor shall provide the submissions as described below. The data for each submission is as follows:

E.3.1 Preliminary NAS Project Schedule Submission

The Preliminary NAS Project Schedule, defining the Contractor's planned operations for the first 60 calendar days shall be submitted for approval at the PRECONSTRUCTION CONFERENCE. The approved preliminary schedule shall be used for payment purposes not to exceed 60 calendar days after NTP. The preliminary schedule shall be detailed for the first 60 days and depict the remainder of the project in summary format. The preliminary schedule shall be submitted on data disk or CD (2 copies).

E.3.2 Initial NAS Project Schedule Submission

The Initial NAS Project Schedule shall be submitted for approval within 50 calendar days after NTP is acknowledged. The schedule shall include detailed activities for the entire project with a reasonable sequence of activities, and shall be at a reasonable level of detail as approved by the Contracting Officer. The initial schedule shall be submitted on data disk or CD (2 copies).

Three hard copies of all diagrams/summary diagrams, reports/sorts, cash flow curves and narrative report as specified in paragraph E.5.

E.3.3 Monthly Updates (entire NAS project schedule)

The Contractor shall submit monthly schedule updates to the Contracting Officer for approval. Monthly updates shall continue until the contract is accepted by the Contracting Officer. See paragraph F-2 for further requirements for monthly updates. These submissions shall enable the Contracting Officer to assess Contractor's monthly progress. The monthly updates shall be submitted on data disk or CD (2 copies).

Three hard copies of updates of all diagrams including summary diagram, reports/sorts, cash flow curves and narrative report as specified in paragraph E.5.

The Contractor's invoice may be deemed as an improper invoice, if it fails to provide monthly updates acceptable to Contracting Officer, this may delay progress payment and may result in an interim unsatisfactory performance

rating. The Contractor shall include its requests to revise/adjust the NAS schedule or approval, prior to implementing the revisions into the official schedule.

E.3.4 Standard Activity Coding Dictionary

The Contractor shall use the activity coding structure defined in the Standard Data Exchange Format (SDEF) in ER 1-1-11, Appendix A. This exact structure is mandatory, even if some fields are not used.

E.3.5 Submission Requirements

E.3.5.1 Data Disks

Two data disks containing the project schedule shall be provided. Data on the disks shall adhere to the SDEF format specified in ER 1-1-11, Appendix A.

E.3.5.2 File Medium

Required data shall be submitted on CD including the baseline and all updates (cumulative). Monthly data disks must be ,3.5 disks, formatted to hold 1.44 MB of data, under the MS-DOS Version S. or 6.x, unless otherwise approved by the Contracting Officer.

E.3.5.3 Disk Label

A permanent exterior label shall be affixed to each disk submitted. The label shall indicate the type of schedule (Preliminary, Initial, Update, or Change), full contract number, project name, project location, data date, name and telephone number or person responsible for the schedule, and the MS-DOS version used to format the disk

E.3.5.4 File Name

Each file submitted shall have a name related to either the schedule data date, project name, or contract number. The Contractor shall develop a naming convention that will ensure that the names of the files submitted are unique. The Contractor shall submit the file naming convention to the Contracting Officer for approval. Provide the naming convention(limited to 4 characters: i.e. Filename (contract 99-47) = 47BL for Baseline and 4701 for 1st monthly.

E.4 Network Logic Diagram

E.4.1 Five hard copies of the network diagram shall be required on the preliminary schedule, initial schedule submission, and updated on each monthly schedule submissions. Monthly updates must indicate actual progress as of the data date. The network diagram shall depict and display the order and interdependence of activities and the sequence in which the work is to be accomplished.

E.4.2 Network diagrams shall show the order and interdependence of project activities and the sequence in which the work is to be accomplished, as planned by the Contractor. The network diagramming procedure which will be used will show how the start of a given activity is dependent on the completion of preceding activities, and how its completion restricts the start of following activities.

E.4.3 Activity Duration

The activity duration shal be indicated in “work” days,and revise the assigned calendar. The Contractor may request to change the work days from 5 days/week to 6 or 7 days/week should this action become necessary to regain the schedule due to problems unrelated to the Government actions.

E.4.3.1 Contractor submissions shall include reasonable activity durations as determined by the Contractor and subcontractors. The durations are to be determined by the Contractor using the planned crew size/composition.

All activities shall be resource loaded with the crew size and composition

NOTE: If resource loading requirement for each activity is not required, the manpower resource profile from PRIMAVERA will not be available.

E.4.4 The logic diagrams may be manually or machine drafted. The quality and readability of the diagrams shall be acceptable to the Contracting Officer.

E.4.5 Omitted

E.4.6 Responsibility

All activities shall be identified in the project schedule by the party responsible to perform the work. Responsibility includes, but is not limited to, the subcontracting firm, Contractor work force, or government agency performing a given task. Activities shall not belong to more than one responsible party. The responsible party for each activity shall be identified by the Responsibility Code. The Government must accept responsibility for activities in writing by the Contracting Officer.

E.4.7 Work Areas

All activities shall be identified in the project schedule by the work area in which the activity occurs. Activities shall not be allowed to cover more than one work area. The work area of each activity shall he identified by the Work Area Code.

E.4.8 Modification

Any activity that is added by a contract modification subnet shall be identified by the modification number. Activities shall not belong to more than one modification.

E.4.9 Bid Item

All activities shall be identified in the project schedule by the Bid Item to which the activity belongs. An activity shall not contain work in more than one bid item. The bid item for each appropriate activity shall be identified by the Bid Item Code.

E.4.10 Phase of Work

All activities shall be identified in the project schedule by the phases of work in which the activity occurs. Activities shall not contain work in more than one phase of work. The project phase of each activity shall be by the unique Phase of Work Code.

E.4.11 Category of Work

All activities shall be identified in the project schedule according to the category of work, which best describes the activity. Category of work refers, but is not limited, to the procurement chain of activities including such

items as submittals, approvals, procurement, fabrication, delivery, installation, start-up, and testing. The category of work for each activity shall be identified by the Category of Work Code.

E.4.12 Feature of Work

All activities shall be identified in the project schedule according to the feature of work to which the activity belongs. Feature of work refers, but is not limited to, a work breakdown structure for the project. The feature of work for each activity shall be identified by the Feature of Work Code.

E.4.13 Scheduled Project Completion

The schedule duration shall extend from NTP to the official contract completion date as awarded (unless approved by Contracting Officer-for early completion).

E.4.14 Project Start Date

The schedule shall start no earlier than the date on which the NTP was acknowledged. The Contractor shall include as the first activity in the project schedule an activity called "Start Project". The "Start Project" activity shall have a “ES” constraint date equal to the date that the NTP was acknowledged, and a zero day duration.

E.4.15 Constraint of Last Activity

Completion of the last activity in the schedule shall be constrained by the contract completion date. Calculation on project updates shall be such that if the early finish of the last activity falls after the contract completion date, then the float calculation shall reflect a negative float on the critical path. The Contractor shall include as the last activity in the project schedule an activity called "End Project". The "End Project" activity shall have a “LF” constraint date equal to the completion date for the project, and a zero day duration.

E.4.16 Early Project Completion

In the event the project schedule shows completion of the project prior to the contract completion date, the Contractor shall identify those activities that have been accelerated and/or those activities that are scheduled in parallel to support the Contractor's "early" completion. Contractor shall specifically address each of the activities noted in the narrative report at every project schedule update period to assist the Contracting Officer in evaluating the Contractor's ability to actually complete prior to the contract period.

E.4.17 Interim Completion Dates

Contractually specified interim completion dates shall also be constrained to show negative float if the early finish date of the last activity in that phase falls after the interim completion date.

E.4.18 Start Phase

The Contractor shall include as the first activity for a project phase an activity called "Start Phase _____" where _____ refers to the phase of work. The "Start Phase _____” activity shall have a “ES” constraint date equal to the date on which the NTP was acknowledged, and a zero day duration.

E.4.19 End Phase

The Contractor shall include as the last activity in a project phase an activity called "End Phase _____” where _____ refers to the phase of work. The "End Phase _____" activity shall have a “LF” constraint date equal to the completion date for the project, and a zero day duration.

E.4.20 Inspection/Acceptance Phase

The Contractor shall include the following work activities with duration and cost:

CQC (all) mechanical systems test(indicate the specific system)

CQC (all) electrical system tests (indicate the specific system)

Government QA (all) mechanical system acceptance/operational test(indicate specific system)

Government QA (all) electrical system acceptance /operational test (indicate specific system)

CQC completion inspection of the entire project

Contractor works off CQC punchlist

Prefinal inspection performed when the facility is completed such that it can be used for it intended function (as determined by the Contracting Officer)

Contractor works off prefinal punchlist

Final/acceptance inspection of the entire project

Contractor works off final punchlist

Contractor shall allow 30 calendar days total duration prior to current contract completion date for the above stated activities. (See specification section 01451 Quality Control).

E.4.21 Default Progress Data Disallowed

Actual Start and Finish dates shall not be automatically updated by default mechanisms that may be included in CPM scheduling software systems. Actual Start and Finish dates on the CPM schedule shall match those dates provided from Contractor Quality Control Reports. The Contractor must document the Actual Start and Finish dates on the Daily Contractor Quality Control report by activity. Updating of the percent complete and the remaining duration of any activity shall be independent functions. Program features which calculate one of these parameters from the other shall be disabled.

E.4.22 Out-of-Sequence Progress

Activities that have posted progress without all preceding logic being satisfied (Out-of-Sequence Progress) will be allowed only on a case-by-case approval of the Contracting Officer. The Contractor shall propose logic corrections to eliminate all out of sequence progress or justify not changing the sequencing for approval prior to submitting an updated project schedule.

E.4.23 Negative Lags

Lag duration contained in the project schedule shall not have a negative value.

E.4.24 Project Monthly and Specific Milestone Dates

Milestone dates shall be shown on the diagram for start of project, each monthly milestone for the critical path activity in progress as of the data date, specific milestones such as: foundation complete, structure complete, roof complete, facility dried in, interim completion dates, and other specific contract milestones as required by the Contracting Officer.

E.4.25 Critical Path

The critical path shall be clearly shown on all diagrams (as approved).

E.4.26 Banding

Activities shall be grouped to assist in the understanding of the activity sequence. Typically, this flow will group activities by category of work, work area and/or responsibility.

E.4.27 S-Curves---cash flow curves

Earnings (cash flow) curves (as required for submissions) shall show scheduled ES/EF and LS/LF curves and actual progress plotted as of the data date. The cash flow curves are affected by the assigned cost and duration of the activities.

The LS/LF cash flow curve is expected approximate 40% earning (without stored material) @ 50% of the contract duration and 70% earning @ 70% of contract duration.

E.5 Schedule Reports/Sorts (As Required By Contracting Officer For Submissions)

The format for each activity for the schedule reports listed below shall contain: Activity Numbers, Activity Description, Original Duration, Remaining Duration, Early Start Date, Early Finish Date, Late Start Date, Late Finish Date, Total Float. Actual Start and Actual Finish Dates shall he printed for those activities in progress or completed.

E.5.1 Activity Report/Sort

A list of all activities sorted according to activity number.

E.5.2 Logic Report/Sort

A list of Preceding and Succeeding activities for every activity in ascending order by activity number. Preceding and succeeding activities shall include all information listed above in paragraph Schedule Reports. A blank line shall be left between each activity grouping.

E.5.3 Total Float Report/Sort

A list of all incomplete activities sorted in ascending order of total float. Activities which have the same amount of total float shall be listed in ascending order of Early Start Dates. Completed activities shall not be shown on this report.

E.5.4 Earnings Report/Sort

A calculation of the Contractor's Total Earnings on the project from the NTP until the most recent Monthly Progress Meeting. This report shall reflect

the Earnings of specific activities based on the agreements made in the field and approved between the Contractor and Contracting Officer at the most recent Monthly Progress Meeting. Provided that the Contractor has provided a complete schedule update, this report shall serve as the basis of determining Contractor Payment. Activities shall be grouped by bid item and sorted by activity numbers. This report shall sum all activities in a bid item and provide a bid item percent and complete and sum all bid items to provide a total project percent complete. The printed report shall contain, for each activity: the Activity Number, Activity Description, original Budgeted Amount, Total Quantity, Quantity to Date, Percent Complete (based on cost), and Earnings to Date.

E.5.5 Milestone Report/Sort

The established monthly and special milestones shall be included in this report. The milestones must be established for each significant project features such as: clearing-grading-demolition, foundation, slab-on-grade, structure-frame, exterior walls-windows, roof-building dry-in, interior walls-mech/elect R/I, above ceiling mech/elect R/I, ceiling, interior wall finish--doors, painting-coverings, floor finish, installation of mech/elect and other equipment-fixtures-casework, plumbing, HVAC system, finish interior mech/elect, testing-commissioning mech/elect systems, onsite utilities, paving-landscaping, prefinal-final inspections—final cleanup and/or other features (as applicable for the project).

E.5.6 Late Start Sort

E.5.7 Bid Item Sort

E.6 Narrative Report

A Narrative Report shall be provided with the preliminary, initial, and each monthly update of the project schedule. This report shall include: a description of activities along the most critical paths, a description of current and anticipated problem areas or delaying factors and their impact, and an explanation of corrective actions taken or required to be taken. The narrative report is expected to relay to the Government, the Contractor's thorough analysis of the schedule output and its plans to compensate for any problems, either current or potential, which are revealed through that analysis. If the Contractor believes that any Government action or inaction has, or potentially, will impact its progress, it will include the specific notice of the fact in this report. This information should include the activity number of the impacted work, nature and duration of the impact.

The narrative report shall address all modifications and weather activities that were input for the progress and their impact on the contract completion and total float.

E.6.1 Approved Changes Verification

Only project schedule changes that have been previously approved by the Contracting Officer shall be included in the schedule submission. The Narrative Report shall specifically reference, on an activity by activity basis, all changes made since the previous period and relate each change to documented, approved schedule changes. The Contractor shall not change the NAS schedule without specific written approval from the Contracting Officer. Unauthorized changes are not acceptable.

F. MONTHLY PROGRESS MEETINGS

There will be two progress meetings.

F.1 First - A progress update meeting will be held at the onsite between USACE and the authorized Contractor representatives, on the agreed cut-off date established at the preconstruction conference. During this meeting the Contractor shall indicate its requested percentage completed on each activity on which there was a revised percentage of completion. The Contracting Officer must approve actual progress percentages for each activity. The updated progress data will be evluated at the second progress meeting.

F.2 Second - A progress evaluation meeting shall be held with the Contractor, after the updating of the current progress period work activities percentage is complete including modifications and adverse weather activities, to evaluate progress and the NAS schedule.

The monthly updated NAS schedule is submitted to the Contracting Officer, for approval, with the Contractor’s request for progress payment. The evaluation will include a review of actual durations compared to scheduled durations for critical and non-critical activities, progress on critical activities and near critical activities, trends, and current/potential problem areas, cash flow progress, and projected workflow of activities.

The Contractor’s narrative report shall be available for review at least three days prior to the second progress meeting.

The Contracting Officer shall approve all proposed revisions and adjustments to the NAS schedule. Update information must include the Actual Start Dates, Actual Finish Dates, Remaining Durations, and Cost-to-Date.The Contractor mustaddress all the activities on an activity by activity basis during the second progress meeting.

The monthly NAS schedule update must include an adverse weather activity for work activities impacted greated than 50% of the work shift or were impacted by previous adverse weather (carry-over). The adverse weather activities must be added and applied to the NAS schedule, (all work activities –within 10 days float or less when compared to the current critical path and current critical activities)--AFTER all of the modifications finalized within the month have been applied to the NAS schedule in the sequential order of finalization during the progress month.

The time extension for usually severe weather (in calendar days) must result from the agreement reached or (as directed) by the Contracting Officer) following the joint Contractor and Contracting Officer monthly weather evaluation held to review the CQC and QA daily reports, not later than 7 calendar days after the end of the progress month. The Contracting Officer will confirm the results of this evaluation to the Contractor in writing monthly.

The official contract completion date must be revised on the NAS schedule, monthly (if applicable)based on the Contracting Officer’s letter confirming the results of the monthly evaluation, to include the time extension in calendars of unusally sereve weather (actual adverse weather impact less the specified anticipated adverse weather impact, for the specific month).

A contract modification (SF 30) for a time extension to the official contract completion date, due to unusally sereve weather (if any), will be completed quarterly by the Contracting Officer based on the monthly evaluations.

F.2.1 Remaining Durations

The estimated Remaining Duration for each activity in-progress. Time-based progress calculations shall be based on Remaining Duration for each activity.

F.2.2 Logic Changes

All logic changes pertaining to NTP on change orders, change orders to be incorporated into the schedule, Contractor proposed changes in work sequence, corrections to schedule logic for out-of-sequence progress, lag duration, and other changes that have been made pursuant to contract provisions shall be specifically identified and discussed.

F.2.3 Other Changes

Other changes required due to delays in completion of any activity or group of activities include: 1) delays beyond the Contractor's control, such as strikes and unusual weather. 2) delays encountered due to submittals (material delivery), Government Activities, deliveries or work stoppages which make re-planning the work necessary. 3) Changes required to correct a schedule which does not represent the actual or planned prosecution and progress of the work.

F.3 Progress Meeting Attendance

The Contractor's Project Manager/Superintendent, Chief Quality Control, and Contractor’s Scheduler, (as approved in paragraph B), shall attend the second monthly progress meeting. The onsite Government representatives shall be advised of the meetings location, time and date.

F.4 Update Submission Following Progress Meeting

A complete update of the entire NAS project progress schedule containing all approved revisions, and adjustments, based on the second monthly progress meeting, shall be submitted not later than 6 working days after the second monthly progress meeting, (if applicable).

G. REQUESTS FOR TIME EXTENSIONS

In the event the Contractor requests a time extension of the contract completion date, or any interim milestone date, the Contractor shall furnish the following for a determination as to whether or not the Contractor is entitled to an extension of time under the provisions of the contract: justification, project schedule data, and supporting evidence as the Contracting Officer may deem necessary. Submission of proof of delay shall be based on a subnet/fragnet of work activities, revised activity logic, duration, and costs (updated to the specific date that the delay occurred) is required for any time extension approvals. The project schedule shall clearly display that the Contractor has used, in full, all the float time available for the work involved with this request. Actual delays that are found to be caused by the Contractor's own actions, which result in the extension of the schedule, shall not be a cause for a time extension to the contract completion date.

G.1 Submission Requirements For Justification Of Request For Time Extension

The Contractor shall submit a comprehensive time analysis and justification for each “Request for Proposal” for a change in the contract, based upon the most recent approved schedule update at the time of the RFP issued. Such a time analysis and justification shall be in accordance with the requirements of other appropriate Contract Clauses and shall include, as a minimum:

a. A subnet/fragnet of activities indicating all new change activities and the affect on existing schedule activities.

b. A brief explanation of the causes of the change.

c. An analysis of the overall impact the subnet/fragnet has when applied to the current-updated approved NAS schedule.

Activities impacted in each justification for change shall be identified by a unique activity code contained in the required data file.

H. MODIFICATIONS TO THE CONTRACT

H.1 Unpriced, Unilateral And Bilateral (Without Agreement On Time) Modifications

Upon receipt of the signed SF 30, for un-priced and unilateral modifications (or bilateral modifications with agreement on costs without an agreement on time, the Contractor shall submit proposed schedule revisions (in the form of a proposed subnet/fragnet) to the Contracting Officer for approval, within 14 days of the SF 30 being issued. The proposed (subnet/fragnet) revisions to the schedule will be approved by the Contracting Officer prior to application of those changes within the project schedule.

Should the Contractor fail or refuse to submit the provisions, the Contracting Officer may furnish the Contractor suggested (subnet/fragnet) revisions to the project schedule.

Upon receipt, the Contractor shall include these subnet/fragnet revisions in the project schedule.

If the Contractor has any objections to the revisions furnished by the Contracting Officer, the Contractor shall advise the Contracting Officer within 14 days of receipt of the revisions.

Regardless of the objections, the Contractor shall continue to update the schedule with the Contracting Officer's revisions until a mutual agreement on the revisions is reached.

If the Contractor fails to submit alternative revisions within 2 weeks of receipt of the Contracting officer's proposed revisions, the Contractor will be deem to have concurred with the Contracting Officer's proposed revisions. The proposed revisions will be the basis for an “equitable adjustment" for performance of the work.

H.2 Bilateral modifications shall be entered into the NAS schedule, utilizing the subnet/fragnet as agreed during negotiations, immediately after receipt of signed SF 30. Entries to the schedule must be approved by Contracting Officer.

H.3 All modifications subnets/fragnets shall be applied to the NAS schedule immediately in the sequence in which they were finalized (received signed SF 30). Weather time extensions must be included upon receipt of the results of the monthly weather evaluation.

I. CONTRACTOR FALLS BEHIND THE APPROVED NAS PROJECT SCHEDULE

If the Contractor falls behind its approved schedule,(behind the LS/LF cash flow curve or more than 15 work days of negative float) or performs the work in such a manner that the network diagram and mathematical analysis no longer indicate reasonable logic and duration for completion of the work by the current contract completion date, as determined by the Contracting Officer, the Contractor shall promptly provide a supplemental NAS recovery or

completion schedule for completion by the current completion date, by reducing the remaining durations, revising logic, or adjusting resources onsite (in addition to the original approved NAS schedule) as approved by the Contracting Officer. The supplemental schedule shall be (resource loaded with crew size and productivity for each remaining activity, and indicating overtime, weekend work, double shifts needed to regain the schedule), in accordance with FAR 52.236-15, without additional cost to the Government. The supplement schedule shall not replace the original approved schedule as the official contract schedule. The original approved schedule shall be updated monthly (in addition to the supplemental schedule) and monitored by the Contractor and the Contracting Officer to determine the effect of the supplemental schedule progress has on the contract progress to regain its rate of progress for timely completion as specified.

The Contractor shall not artificially improve its progress by revising the schedule logic restraints or shortening future work activity durations. The Contractor may improve its progress by performing sequential work activities concurrently or by performing activities more quickly than planned, but such improvements shall be indicated on a supplement schedule and shall not be recorded on the official until they have actually been achieved by the Contractor. The additional resources required to improve the progress must be evident on the work site.

Failure of the Contractor to perform work and maintain progress in accordance with the supplemental recovery or completion schedule, may result in an interim and final unsatisfactory performance rating and/or may result in corrective action by the contraction officer in accordance with far 52.236-15.

J. OWNERSHIP OF FLOAT

All float available in the schedule, at any time, shall not be considered for the exclusive use of either the Government or the Contractor.

PROJECT TABLE OF CONTENTS

DIVISION 01 - GENERAL REQUIREMENTS

01330 SUBMITTAL PROCEDURES
01351A SAFETY, HEALTH, AND EMERGENCY RESPONSE (HTRW/UST)
01400 SPECIAL SAFETY REQUIREMENTS
01450 CHEMICAL DATA QUALITY CONTROL
01451A CONTRACTOR QUALITY CONTROL
01500 TEMPORARY CONSTRUCTION FACILITIES
01670 RECYCLED / RECOVERED MATERIALS
01730 OPERATION AND MAINTENANCE SUPPORT INFORMATION (OMSI)
01731 GENERAL REQUIREMENTS
01780 AS-BUILT DRAWINGS SUBMITTALS
01781 OPERATION AND MAINTENANCE DATA

DIVISION 02 - SITE WORK

02013 ENVIRONMENTAL PROTECTION DURING CONSTRUCTION
02115A ABOVEGROUND STORAGE TANK REMOVAL
02116 REMOVAL AND DISPOSAL OF UNDERGROUND STORAGE TANKS
02220 DEMOLITION
02300a EARTHWORK
02315a EXCAVATION, FILLING AND BACKFILLING FOR BUILDINGS
02316a EXCAVATION, TRENCHING, AND BACKFILLING FOR UTILITIES SYSTEMS
02374a GEOSYNTHETIC DRAINAGE LAYER
02510a WATER DISTRIBUTION SYSTEM
02531a SANITARY SEWERS
02532a FORCE MAINS; SEWER
02547 BITUMINOUS PAVEMENT WITH BASE COURSE
02556a GAS DISTRIBUTION SYSTEM
02630a STORM-DRAINAGE SYSTEM
02721 RIGID BASE COURSE
02754a CONCRETE PAVEMENT
02760a FIELD MOLDED SEALANTS FOR SEALING JOINTS IN RIGID PAVEMENTS
02763a PAVEMENT MARKINGS
02770a CONCRETE SIDEWALKS AND CURBS AND GUTTERS
02821a FENCING
02832 SEGMENTAL CONCRETE BLOCK RETAINING WALL
02921a SEEDING
02922a SODDING
02930a EXTERIOR PLANTING

DIVISION 03 - CONCRETE

03100a STRUCTURAL CONCRETE FORMWORK
03150a EXPANSION JOINTS, CONTRACTION JOINTS, AND WATERSTOPS
03200a CONCRETE REINFORCEMENT
03300 CAST-IN-PLACE STRUCTURAL CONCRETE

DIVISION 04 - MASONRY

04200a MASONRY

DIVISION 05 - METALS

05106 ROLLING COVER (CUSTOM FABRICATED)
05120 STRUCTURAL STEEL
05160 RETROFIT ROOF FRAMING SYSTEM
05210a STEEL JOISTS
05300a STEEL DECKING
05500a MISCELLANEOUS METAL

DIVISION 06 - WOODS & PLASTICS

06100a ROUGH CARPENTRY
06200a FINISH CARPENTRY
06410 CUSTOM CASEWORK

DIVISION 07 - THERMAL & MOISTURE PROTECTION

07131a ELASTOMERIC MEMBRANE WATERPROOFING
07416 STRUCTURAL STANDING SEAM METAL ROOF (SSSMR) SYSTEM
07510a BUILT-UP ROOFING
07600a SHEET METALWORK, GENERAL
07840a FIRESTOPPING
07900a JOINT SEALING

DIVISION 08 - DOORS & WINDOWS

08110 STEEL DOORS AND FRAMES
08210 WOOD DOORS
08520a ALUMINUM AND ENVIRONMENTAL CONTROL ALUMINUM WINDOWS
08700 BUILDERS' HARDWARE
08810a GLASS AND GLAZING

DIVISION 09 - FINISHES

09250A GYPSUM WALLBOARD
09310A CERAMIC TILE
09510A ACOUSTICAL CEILINGS
09650A RESILIENT FLOORING
09670A INDUSTRIAL RESIN-BASED FLOORING
09680A CARPET
09720 WALLCOVERINGS
09900 PAINTS AND COATINGS
09915 COLOR SCHEDULE
09965A PAINTING: SECONDARY CONTAINMENT (CONCRETE SLAB)
09971 EXTERIOR COATING OF STEEL STRUCTURES
09973 INTERIOR COATING OF WELDED STEEL PETROLEUM FUEL TANKS

DIVISION 10 - SPECIALTIES

10100A VISUAL COMMUNICATIONS SPECIALTIES
10160A TOILET PARTITIONS
10440A INTERIOR SIGNAGE
10500 LOCKERS
10800A TOILET ACCESSORIES

DIVISION 11 - EQUIPMENT

11310A PUMPS; SEWAGE SERVICE LIFT STATION 800 & W-900
11312N PACKAGE GRINDER PUMPLIFT STATION
11601N LABORATORY FUMEHOODS

DIVISION 12 - FURNISHINGS

12350A LAB CASEWORK
12490A WINDOW TREATMENT

DIVISION 13 - SPECIAL CONSTRUCTION

13080 FORCE PROTECTION FOR MISCELLANEOUS EQUIPMENT
13100A LIGHTNING PROTECTION SYSTEM
13110A CATHODIC PROTECTION SYSTEM (SACRIFICIAL ANODE)
13112A CATHODIC PROTECTION SYSTEM (IMPRESSED CURRENT)

13125 PRE-ENGINEERED METAL CANOPY
13280A ASBESTOS ABATEMENT
13286N HANDLING OF LIGHTING BALLASTS AND LAMPS CONTAINING PCBs AND MERCURY
13851A FIRE DETECTION AND ALARM SYSTEM, ADDRESSABLE
13930A WET PIPE SPRINKLER SYSTEM, FIRE PROTECTION

DIVISION 15 - MECHANICAL

15050 MECHANICAL EQUIPMENT, FUELING
15060 PIPE, MANUAL VALVES, AND FITTINGS, FUELING SYSTEM
15070A FORCE PROTECTION FOR MECHANICAL EQUIPMENT
15080A THERMAL INSULATION FOR MECHANICAL SYSTEMS
15101 CONTROL VALVES, FUELING SYSTEM
15140 PUMPS, FUELING SYSTEM
15176 FUEL STORAGE TANK AND COMPONENTS
15177 PETROLEUM TANK CLEANING
15190A GAS PIPING SYSTEMS
15400 PLUMBING, GENERAL PURPOSE
15569A WATER AND STEAM HEATING; OIL, GAS OR BOTH; UP TO 20 MBTUH
15650 CENTRAL REFRIGERATED AIR-CONDITIONING SYSTEM
15653 AIR-CONDITIONING SYSTEM (UNITARY TYPE)
15880 FILTER SEPARATOR, FUELING SYSTEM
15895A AIR SUPPLY, DISTRIBUTION, VENTILATION, AND EXHAUST SYSTEM
15899 SYSTEM START-UP, FUELING SYSTEM
15951A DIRECT DIGITAL CONTROL FOR HVAC
15970 PUMP CONTROL AND ANNUNCIATION SYSTEM
15990A TESTING, ADJUSTING, AND BALANCING OF HVAC SYSTEMS
15995A COMMISSIONING OF HVAC SYSTEMS

DIVISION 16 - ELECTRICAL

16070A FORCE PROTECTION FOR ELECTRICAL EQUIPMENT
16264 GFCI DIESEL-GENERATOR SET, STATIONARY 15-600 KW, STANDBY APPLICATIONS
16370A ELECTRICAL DISTRIBUTION SYSTEM, AERIAL
16375A ELECTRICAL DISTRIBUTION SYSTEM, UNDERGROUND
16415A ELECTRICAL WORK, INTERIOR
16528A EXTERIOR LIGHTING
16710A PREMISES DISTRIBUTION SYSTEM
16711A TELEPHONE SYSTEM, OUTSIDE PLANT

-- End of Project Table of Contents --

SECTION TABLE OF CONTENTS

DIVISION 01 - GENERAL REQUIREMENTS

SECTION 01330

SUBMITTAL PROCEDURES

09/00

PART 1 GENERAL

1.1 SUBMITTAL IDENTIFICATION
1.2 SUBMITTAL CLASSIFICATION
1.2.1 Government Approved
1.2.2 Information Only
1.3 APPROVED SUBMITTALS
1.4 DISAPPROVED SUBMITTALS
1.5 WITHHOLDING OF PAYMENT

PART 2 PRODUCTS (Not used)

PART 3 EXECUTION

3.1 GENERAL
3.2 SUBMITTAL REGISTER
3.3 SCHEDULING
3.4 TRANSMITTAL FORM (ENG FORM 4025)
3.5 SUBMITTAL PROCEDURE
3.5.1 Procedures
3.5.2 Deviations
3.6 CONTROL OF SUBMITTALS
3.7 GOVERNMENT APPROVED SUBMITTALS
3.8 INFORMATION ONLY SUBMITTALS
3.9 STAMPS

-- End of Section Table of Contents --

CEGS-01330/S (September 2000)

SECTION 01330

SUBMITTAL PROCEDURES
09/00

PART 1 GENERAL

1.1 SUBMITTAL IDENTIFICATION

Submittals required are identified by SD numbers and titles as follows:

SD-01 Preconstruction Submittals

SD-02 Shop Drawings

SD-03 Product Data

SD-04 Samples

SD-05 Design Data

SD-06 Test Reports

SD-07 Certificates

SD-08 Manufacturer's Instructions

SD-09 Manufacturer's Field Reports

SD-10 Operation and Maintenance Data

SD-11 Closeout Submittals

1.2 SUBMITTAL CLASSIFICATION

Submittals are classified as follows:

1.2.1 Government Approved

Government approval is required for extensions of design, critical materials, deviations, equipment whose compatibility with the entire system must be checked, and other items as designated by the Contracting Officer. Within the terms of the Contract Clause entitled "Specifications and Drawings for Construction," they are considered to be "shop drawings."

1.2.2 Information Only

All submittals not requiring Government approval will be for information only. They are not considered to be "shop drawings" within the terms of the Contract Clause referred to above.

1.3 APPROVED SUBMITTALS

The Contracting Officer's approval of submittals shall not be construed as a complete check, but will indicate only that the general method of construction, materials, detailing and other information are satisfactory. Approval will not relieve the Contractor of the responsibility for any error which may exist, as the Contractor under the Contractor Quality Control (CQC) requirements of this

contract is responsible for dimensions, the design of adequate connections and details, and the satisfactory construction of all work. After submittals have been approved by the Contracting Officer, no resubmittal for the purpose of substituting materials or equipment will be considered unless accompanied by an explanation of why a substitution is necessary.

1.4 DISAPPROVED SUBMITTALS

The Contractor shall make all corrections required by the Contracting Officer and promptly furnish a corrected submittal in the form and number of copies specified for the initial submittal. If the Contractor considers any correction indicated on the submittals to constitute a change to the contract, a notice in accordance with the Contract Clause "Changes" shall be given promptly to the Contracting Officer.

1.5 WITHHOLDING OF PAYMENT

Payment for materials incorporated in the work will not be made if required approvals have not been obtained.

PART 2 PRODUCTS (Not used)

PART 3 EXECUTION

3.1 GENERAL

The Contractor shall make submittals as required by the specifications. The Contracting Officer may request submittals in addition to those specified when deemed necessary to adequately describe the work covered in the respective sections. Units of weights and measures used on all submittals shall be the same as those used in the contract drawings. Each submittal shall be complete and in sufficient detail to allow ready determination of compliance with contract requirements. Prior to submittal, all items shall be checked and approved by the Contractor's Quality Control (CQC) System Manager and each item shall be stamped, signed, and dated by the CQC System Manager indicating action taken. Proposed deviations from the contract requirements shall be clearly identified. Submittals shall include items such as: Contractor's, manufacturer's, or fabricator's drawings; descriptive literature including (but not limited to) catalog cuts, diagrams, operating charts or curves; test reports; test cylinders; samples; O&M manuals (including parts list); certifications; warranties; and other such required submittals. Submittals requiring Government approval shall be scheduled and made prior to the acquisition of the material or equipment covered thereby. Samples remaining upon completion of the work shall be picked up and disposed of in accordance with manufacturer's Material Safety Data Sheets (MSDS) and in compliance with existing laws and regulations.

3.2 SUBMITTAL REGISTER

At the end of this section is a submittal register showing items of equipment and materials for which submittals are required by the specifications; this list may not be all inclusive and additional submittals may be required. The attached submittal register identifies only the submittal section, type of submittal, description of item submitted, paragraph number related to submittal item (section submittal paragraph if none listed), submittal classification (G), and submittal reviewer identifier (AE or RE). Any submittal without a submittal classification and submittal reviewer identifier is considered to be For Information Only (FIO). The submittal register generated by the Government Resident Management System (RMS) Software is used for tracking construction submittals and is referred to as ENG Form 4288 (RMS). The Contractor shall maintain an ENG Form 4288 (RMS) for the project in accordance with the attached ENG Form 4288 (RMS) Instructions. The Contractor will be either furnished one (1) hard copy set of ENG Forms 4288 (RMS)at the preconstruction conference.

Much of the same information contained on the attached submittal register will be included on the ENG Forms 4288 (RMS) furnished to the Contractor. Columns "c" through "f" have been completed by the Government; The Contractor shall complete the appropriate columns and return the completed hard copy of the forms to the Contracting Officer for approval within 30 calendar days after Notice to Proceed. The ENG Form 4288 (RMS)will become a part of the contract after approval. The register shall be kept up-to-date. The approved ENG Form 4288 (RMS) will become the scheduling document and will be used to control submittals throughout the life of the contract. The ENG Form 4288 (RMS) and the progress schedules shall be coordinated.

3.3 SCHEDULING

Submittals covering component items forming a system or items that are interrelated shall be scheduled to be coordinated and submitted concurrently. Certifications to be submitted with the pertinent drawings shall be so scheduled. Adequate time (a minimum of 30 calendar days exclusive of mailing time) shall be allowed and shown on the register for review and approval. No delay damages or time extensions will be allowed for time lost in late submittals.

3.4 TRANSMITTAL FORM (ENG FORM 4025)

The sample transmittal form (ENG Form 4025) included in Attachment 1 to Section 00800 shall be used for submitting both Government approved and information only submittals in accordance with the instructions on the reverse side of the form. These forms will be furnished to the Contractor. This form shall be properly completed by filling out all the heading blank spaces and identifying each item submitted. Special care shall be exercised to ensure proper listing of the specification paragraph and/or sheet number of the contract drawings pertinent to the data submitted for each item.

3.5 SUBMITTAL PROCEDURE

Submittals shall be made as follows:

3.5.1 Procedures

The Contractor shall be responsible for the scheduling and control of all submittals. The Contractor is responsible for confirming that the submittal register includes all submittals required by the contract documents.

In addition to those items listed on ENG Form 4288, the Contractor will furnish submittals for any deviation from the plans or specifications. The scheduled need dates must be recorded on the document for each item for control purposes and critical items must be tied to the Contractor's approved schedule where applicable.

The Contractor will submit to the Contracting Officer for approval a minimum of five copies of all G-RE (Resident/Area Office Review), or G-AE (Architect-Engineer Review) level submittals. Three copies of all FIO level submittals will be provided. The number of copies of submittals specified in this portion of the contract shall be complied with in lieu of four copies as specified by FAR 52.236-21.

For those contracts requiring Network Analysis System (NAS), the Contractor will schedule on the NAS critical items of equipment submittals and procurement activities which will, or have the potential to, significantly impact project completion. The inclusion or exclusion of critical items shall be subject to the approval of the Contracting Officer.

Where ENG Form 4025 must be submitted prior to approval of the Construction Progress Schedule, the Contractor shall submit an initial annotated ENG Form

4288 upon which dates for submittal, approval and delivery of procurement items shall be included for the first 60 days of the work. Upon approval of the Construction Progress Schedule, or no later than 60 days after Notice to Proceed, the Contractor shall submit final annotated copies of ENG Form 4288. Dates shall be coordinated with the approved Construction Progress Schedule to logically interface with the sequence of construction. Critical item numbers will be shown on the listing if NAS is required.

Furnishing the schedule shall not be interpreted as relieving the Contractor of his obligation to comply with all the specification requirements for the items on the schedule. Contractor's Quality Control representative shall review the listing at least every 30 days and take appropriate action to maintain an effective system. The Contractor shall furnish a list each 30 days of all submittals on which either Government's or Contractor's action is past due. He shall also furnish revised due dates in those cases when the original submittal schedule is no longer realistic. This monthly list of delayed items shall also be annotated by the Contractor to show what corrective action he is taking with regard to slippages in submittal schedule which are attributable to actions by him, his subcontractors, or suppliers.

The Contractor shall provide a complete updated submittal register indicating the current status of all submittals when requested by the Contracting Officer in order to assure himself the schedule is being maintained.

The Contractor shall certify that each submittal is correct and in strict conformance with the contract drawings and specifications. All submittals not subject to the approval of the Contracting Officer will be submitted for information purposes only.

No Corps of Engineers action will be required prior to incorporating these items into the work, but the submittal shall be furnished to the Area/Resident Engineer not less than 2 weeks prior to procurement of Contractor certified material, equipment, etc.

These Contractor approved submittals will be used to verify that material received and used in the job is the same as that described and approved and will be used as record copies. All samples of materials submitted as required by these specifications shall be properly identified and labeled for ready identification, and upon being certified by the Contractor and reviewed by the Contracting Officer, shall be stored at the site of the work for job site use until all work has been completed and accepted by the Contracting Officer. Delegation of this approval authority to Contractor Quality Control does not relieve the Contractor from the obligation to conform to any contract requirement and will not prevent the Contracting Officer from requiring removal and replacement of construction not in contract conformance; nor does it relieve the Contractor from the requirement to furnish "samples" for testing by the Government Laboratory or check testing by the Government in those instances where the technical specifications so prescribe.

Contractor certified drawings will be subject to quality assurance review by the Government at any time during the duration of the contract. No adjustment for time or money will be allowed for corrections required as a result of noncompliance with plans and specifications.

Submittals Requiring Government Approval (G-RE Level or G-AE Level). Where the review authority is designated to the Government, the Contractor is required to sign the certification on ENG Form 4025 in the box beside the remarks block in Section I. The Government will code the items in block h and sign the approval action block in Section II as the approving authority.

Operating and Maintenance Instructions. Six complete sets of instructions containing the manufacturer's operating and maintenance instructions for each piece of equipment shall be furnished. Each set shall be permanently bound and

shall have a hard cover. One complete set shall be furnished at the time test procedures are submitted. Remaining sets shall be furnished before the contract is completed. The following identification shall be inscribed on the covers: The words "OPERATING AND MAINTENANCE INSTRUCTIONS," name and location of the facility, name of the Contractor, and contract number. Fly sheets shall be placed before instructions covering each subject. Instruction sheets shall be approximately 8-1/2 by 11 inches, with large sheets of drawings folded in. Instructions shall include but are not limited to:

(1) System layout showing piping, valves and controls;

(2) Approved wiring and control diagrams;

(3) A control sequence describing startup, operation and shutdown;

(4) Operating and maintenance instructions for each piece of equipment, including lubrication instructions and troubleshooting guide; and

(5) Manufacturer's bulletins, cuts and descriptive data; parts lists and recommended parts.

3.5.2 Deviations

For submittals which include proposed deviations requested by the Contractor, the column "variation" of ENG Form 4025 shall be checked. The Contractor shall set forth in writing the reason for any deviations and annotate such deviations on the submittal. The Government reserves the right to rescind inadvertent approval of submittals containing unnoted deviations.

3.6 CONTROL OF SUBMITTALS

The Contractor shall carefully control his procurement operations to ensure that each individual submittal is made on or before the Contractor scheduled submittal date shown on the approved "Submittal Register."

3.7 GOVERNMENT APPROVED SUBMITTALS

Upon completion of review of submittals requiring Government approval, the submittals will be identified as having received approval by being so stamped and dated. Four copies of the submittal will be retained by the Contracting Officer and one copy of the submittal will be returned to the Contractor.

3.8 INFORMATION ONLY SUBMITTALS

Normally submittals for information only will not be returned. Approval of the Contracting Officer is not required on information only submittals. The Government reserves the right to require the Contractor to resubmit any item found not to comply with the contract. This does not relieve the Contractor from the obligation to furnish material conforming to the plans and specifications; will not prevent the Contracting Officer from requiring removal and replacement of nonconforming material incorporated in the work; and does not relieve the Contractor of the requirement to furnish samples for testing by the Government laboratory or for check testing by the Government in those instances where the technical specifications so prescribe.

3.9 STAMPS

Stamps used by the Contractor on the submittal data to certify that the submittal meets contract requirements shall be similar to the following:

CONTRACTOR

(Firm Name)

_____ Approved

_____ Approved with corrections as noted on submittal data and/or attached sheets(s).

SIGNATURE: _____

TITLE: _____

DATE: _____

-- End of Section --

SUBMITTAL REGISTER

CONTRACT NO.

TITLE AND LOCATION
POL Storage Complex, Pope AFB, North Carolina

CONTRACTOR

ACTIVITY NO	TRANSMITTAL NO	SPEC SECT	DESCRIPTION ITEM SUBMITTED	PARAGRAPH #	CLASSIFICATION	GOVT OR A/E REVWR	CONTRACTOR: SCHEDULE DATES			CONTRACTOR ACTION			APPROVING AUTHORITY					
							SUBMIT	APPROVAL NEEDED BY	MATERIAL NEEDED BY	ACTION CODE	DATE OF ACTION	DATE FWD TO APPR AUTH/ DATE RCD FROM CONTR	DATE FWD TO OTHER REVIEWER	DATE RCD FROM OTH REVIEWER	ACTION CODE	DATE OF ACTION	MAILED TO CONTR/ DATE RCD FRM APPR AUTH	REMARKS
(a)	(b)	(c)	(d)	(e)	(f)		(g)	(h)	(i)	(j)	(k)	(l)	(m)	(n)	(o)	(p)	(q)	(r)
		01351A	SD-03 Product Data															
			Exposure Monitoring/Air Sampling	1.14	G	RE												
			Program															
			Site Control Log	1.41.2	G	RE												
			HAZWOPER Qualifications		G	RE												
			Certificates															
		01400	SD-01 Preconstruction Submittals															
			Accident Prevention Plan		G	RE												
			Respiratory Protection Program		G	RE												
			SD-06 Test Reports															
			Exposure Assessment and Air		G	RE												
			Monitoring															
			SD-07 Certificates															
			Qualifications		G	RE												
			Training Program		FIO													
			Medical Requirements		FIO													
		01450	SD-03 Product Data															
			Sampling and Analysis Plan	3.3	G	RE												
			SD-06 Test Reports															
			Chemistry Data Package	3.4	G	RE												
		01730	SD-10 Operation and Maintenance															
			Data															
			Manuals		G	AE												
		01780	SD-02 Shop Drawings															
			As-Built Drawings		G	RE												
			SD-03 Product Data															

SUBMITTAL REGISTER

CONTRACT NO.

TITLE AND LOCATION
POL Storage Complex, Pope AFB, North Carolina

CONTRACTOR

ACTIVITY NO	TRANSMITTAL NO	SPEC SECT	DESCRIPTION ITEM SUBMITTED	PARAGRAPH #	CLASSIFICATION	GOVT OR A/E REVWR	CONTRACTOR: SCHEDULE DATES			CONTRACTOR ACTION			APPROVING AUTHORITY					
							SUBMIT	APPROVAL NEEDED BY	MATERIAL NEEDED BY	ACTION CODE	DATE OF ACTION	DATE FWD TO APPR AUTH/ DATE RCD FROM CONTR	DATE FWD TO OTHER REVIEWER	DATE RCD FROM OTH REVIEWER	ACTION CODE	DATE OF ACTION	MAILED TO CONTR/ DATE RCD FRM APPR AUTH	REMARKS
(a)	(b)	(c)	(d)	(e)	(f)		(g)	(h)	(i)	(j)	(k)	(l)	(m)	(n)	(o)	(p)	(q)	(r)
		01780	As-Built Record of Equipment and		G	RE												
			Materials															
		02013	SD-01 Preconstruction Submittals															
			Environmental Protection Plan		G	RE												
			Environmental Monitoring		G	RE												
			Management Plan															
			Protection of Land Resources		G	RE												
			Erosion and Sediment Control		G	RE												
			Plan (ESCP)															
			Protection of Surface and Ground		G	RE												
			Water															
			Protection of Air Resources		G	RE												
			SD-05 Design Data															
			Design Drawings		G	RE												
		02115A	SD-03 Product Data															
			Work Plan	1.6.2	G	RE												
			Qualifications	1.4	G	RE												
			Salvage Rights	3.12.4	FIO													
		02116	SD-06 Test Reports															
			Laboratory testing reports	3.24	G	RE												
			SD-07 Certificates															
			Site safety and health plan	3.2	G	RE												
			Excavation and material handling	1.7.1	G	RE												
			plan															
			Field sampling and laboratory	1.7.2	G	RE												
			testing plan															

SUBMITTAL REGISTER

CONTRACT NO.

TITLE AND LOCATION
POL Storage Complex, Pope AFB, North Carolina

CONTRACTOR

ACTIVITY NO	TRANSMITTAL NO	SPEC SECT	DESCRIPTION ITEM SUBMITTED	PARAGRAPH #	CLASSIFICATION	GOVT OR A/E REVWR	CONTRACTOR: SCHEDULE DATES			CONTRACTOR ACTION			APPROVING AUTHORITY					
							SUBMIT	APPROVAL NEEDED BY	MATERIAL NEEDED BY	ACTION CODE	DATE OF ACTION	DATE FWD TO APPR AUTH/ DATE RCD FROM CONTR	DATE FWD TO OTHER REVIEWER	DATE RCD FROM OTH REVIEWER	ACTION CODE	DATE OF ACTION	MAILED TO CONTR/ DATE RCD FRM APPR AUTH	REMARKS
(a)	(b)	(c)	(d)	(e)	(f)		(g)	(h)	(i)	(j)	(k)	(l)	(m)	(n)	(o)	(p)	(q)	(r)
		02116	Tank and piping removal and	1.7.3	G	RE												
			disposal plan															
			Qualification		G	RE												
			Spill and discharge control plan	3.4	FIO													
			SD-11 Closeout Submittals															
			Other permits	3.24	G	RE												
			Results of excavation	3.24	G	RE												
			Tank disposal paperwork	3.24	G	RE												
			Contaminated soil disposal	3.24	G	RE												
			paperwork															
			Contaminated water disposal	3.24	G	RE												
			paperwork															
			Identification of tanks removed	3.24	G	RE												
			and disposed of															
			Starting and ending dates of	3.24	FIO													
			reporting period															
			Closure report	3.24	G	RE												
			Cumulative quantities of soil	3.24	G	RE												
			excavated															
		02220	SD-07 Certificates															
			Work Plan		G	RE												
		02300a	SD-01 Preconstruction Submittals															
			Monitoring Well Extension Plan	3.14	G	RE												
			SD-03 Product Data															
			Earthwork		G	RE												
			SD-06 Test Reports															

SUBMITTAL REGISTER

CONTRACT NO.

TITLE AND LOCATION
POL Storage Complex, Pope AFB, North Carolina

CONTRACTOR

ACTIVITY NO	TRANSMITTAL NO	SPEC SECT	DESCRIPTION ITEM SUBMITTED	PARAG # RAPH	CLASSIFICATION	GOVT OR A/E REVWR	CONTRACTOR: SCHEDULE DATES			CONTRACTOR ACTION			APPROVING AUTHORITY					
							SUBMIT	APPROVAL NEEDED BY	MATERIAL NEEDED BY	ACTION CODE	DATE OF ACTION	DATE FWD TO APPR AUTH/ DATE RCD FROM CONTR	DATE FWD TO OTHER REVIEWER	DATE RCD FROM OTH REVIEWER	ACTION CODE	DATE OF ACTION	MAILED TO CONTR/ DATE RCD FRM APPR AUTH	REMARKS
(a)	(b)	(c)	(d)	(e)	(f)		(g)	(h)	(i)	(j)	(k)	(l)	(m)	(n)	(o)	(p)	(q)	(r)
		02300a	Testing	3.13	FIO													
			Surveys and Installation Report		FIO													
			SD-07 Certificates															
			Testing	3.13	FIO													
		02315a	SD-06 Test Reports															
			Testing	3.14	G RE													
		02316a	SD-06 Test Reports															
			Field Density Tests	3.4.3	FIO													
			Testing of Backfill Materials	3.4.2	FIO													
		02374a	SD-03 Product Data															
			Sampling and Testing	2.3	G RE													
			Seams and Overlaps	3.1.3	G RE													
			Penetrations	3.1.6	G RE													
			Construction Quality Control	1.4	G RE													
			Laboratory Qualifications															
			SD-04 Samples															
			Geosynthetic Drainage Layer	2.1	G RE													
			SD-06 Test Reports															
			Sampling and Testing	2.3	G RE													
			Geosynthetic Drainage Layer	2.1	G RE													
		02510a	SD-03 Product Data															
			Installation	3.1	FIO													
			Waste Water Disposal Method		FIO													
			Satisfactory Installation		FIO													
			SD-06 Test Reports															
			Bacteriological Disinfection	3.3	FIO													

SUBMITTAL REGISTER

CONTRACT NO.

TITLE AND LOCATION
POL Storage Complex, Pope AFB, North Carolina

CONTRACTOR

ACTIVITY NO	TRANSMITTAL NO	SPEC SECT	DESCRIPTION ITEM SUBMITTED	PARAGRAPH #	CLASSIFICATION	GOVT OR A/E REVWR	CONTRACTOR: SCHEDULE DATES			CONTRACTOR ACTION			APPROVING AUTHORITY					
							SUBMIT	APPROVAL NEEDED BY	MATERIAL NEEDED BY	ACTION CODE	DATE OF ACTION	DATE FWD TO APPR AUTH/ DATE RCD FROM CONTR	DATE FWD TO OTHER REVIEWER	DATE RCD FROM OTH REVIEWER	ACTION CODE	DATE OF ACTION	MAILED TO CONTR/ DATE RCD FRM APPR AUTH	REMARKS
(a)	(b)	(c)	(d)	(e)	(f)		(g)	(h)	(i)	(j)	(k)	(l)	(m)	(n)	(o)	(p)	(q)	(r)
		02510a	Bacteriological Disinfection	3.3.1	FIO													
			SD-07 Certificates															
			Manufacturer's Representative	1.4	FIO													
			Installation	3.1	FIO													
		02531a	SD-07 Certificates															
			Portland Cement	2.7.1	FIO													
			Joints	2.3	FIO													
		02532a	SD-06 Test Reports															
			Hydrostatic Tests	3.2	FIO													
		02547	SD-06 Test Reports															
			Tests;		FIO													
		02556a	SD-02 Shop Drawings															
			Pipe, Fittings, and Associated	2.1	FIO													
			Materials															
			SD-03 Product Data															
			Materials and Equipment	1.3.3	G	RE												
			Spare Parts Data		G	RE												
			Connections to Existing Lines	3.12	G	RE												
			Welding Steel Piping		G	RE												
			Jointing Polyethylene Piping	1.3.2	G	RE												
			Connection Plan		G	RE												
			SD-06 Test Reports															
			Pressure and Leak Tests	3.14.2	G	RE												
			SD-07 Certificates															
			Utility Work		G	RE												
			Training	1.3.2	FIO													

SUBMITTAL REGISTER

CONTRACT NO.

TITLE AND LOCATION
POL Storage Complex, Pope AFB, North Carolina

CONTRACTOR

ACTIVITY NO	TRANSMITTAL NO	SPEC SECT	DESCRIPTION ITEM SUBMITTED	PARAGRAPH #	CLASSIFICATION	GOVT OR A/E REVWR	CONTRACTOR: SCHEDULE DATES			CONTRACTOR ACTION			APPROVING AUTHORITY					
							SUBMIT	APPROVAL NEEDED BY	MATERIAL NEEDED BY	ACTION CODE	DATE OF ACTION	DATE FWD TO APPR AUTH/ DATE RCD FROM CONTR	DATE FWD TO OTHER REVIEWER	DATE RCD FROM OTH REVIEWER	ACTION CODE	DATE OF ACTION	MAILED TO CONTR/ DATE RCD FRM APPR AUTH	REMARKS
(a)	(b)	(c)	(d)	(e)	(f)		(g)	(h)	(i)	(j)	(k)	(l)	(m)	(n)	(o)	(p)	(q)	(r)
		02556a	SD-10 Operation and Maintenance															
			Data															
			Gas Distribution System	3.6	G RE													
		02630a	SD-03 Product Data															
			Placing Pipe	3.3	FIO													
			SD-07 Certificates															
			Resin Certification	2.1.8	FIO													
			Resin Certification	2.1.9	FIO													
			Frame and Cover for Gratings	2.3.7	FIO													
		02721	SD-03 Product Data															
			Equipment	1.7	G RE													
			SD-06 Test Reports															
			Sampling and Testing	1.5	G RE													
		02754a	SD-03 Product Data															
			Equipment	1.7	G RE													
			Paving	3.4	G RE													
			Mixture Proportions	2.11	G RE													
		02760a	SD-03 Product Data															
			Manufacturer's Recommendations		G RE													
			Construction Equipment List		G RE													
			SD-04 Samples															
			Materials		FIO													
		02763a	SD-03 Product Data															
			Equipment	1.5	G RE													
			Composition Requirements	2.2.1	G RE													
			Qualifications		FIO													

SUBMITTAL REGISTER

CONTRACT NO.

TITLE AND LOCATION
POL Storage Complex, Pope AFB, North Carolina

CONTRACTOR

ACTIVITY NO	TRANSMITTAL NO	SPEC SECT	DESCRIPTION ITEM SUBMITTED	PARAGRAPH #	CLASSIFICATION	GOVT OR A/E REVWR	CONTRACTOR: SCHEDULE DATES			CONTRACTOR ACTION			APPROVING AUTHORITY					
							SUBMIT	APPROVAL NEEDED BY	MATERIAL NEEDED BY	ACTION CODE	DATE OF ACTION	DATE FWD TO APPR AUTH/ DATE RCD FROM CONTR	DATE FWD TO OTHER REVIEWER	DATE RCD FROM OTH REVIEWER	ACTION CODE	DATE OF ACTION	MAILED TO CONTR/ DATE RCD FRM APPR AUTH	REMARKS
(a)	(b)	(c)	(d)	(e)	(f)		(g)	(h)	(i)	(j)	(k)	(l)	(m)	(n)	(o)	(p)	(q)	(r)
		02763a	SD-06 Test Reports															
			Sampling and Testing	2.6	FIO													
			SD-07 Certificates															
			Volatile Organic Compound	2.2.3	FIO													
			(VOC)															
		02770a	SD-03 Product Data															
			Concrete	2.1	FIO													
			SD-06 Test Reports															
			Field Quality Control	3.8	FIO													
		02821a	SD-07 Certificates															
			Chain Link Fence	2.1.1	G RE													
		02832	SD-02 Shop Drawings															
			Shop Drawings		G RE													
			SD-03 Product Data															
			Manufacturer's Data		G AE													
			Qualifications	1.6	G RE													
			Soil Testing	3.8	G AE													
			Reinforcement Testing	3.9	G AE													
			Calculations	1.5.1	G AE													
			SD-04 Samples															
			Segmental Concrete Units	2.1	G RE													
			Reinforcement	2.2	G AE													
			SD-07 Certificates															
			Reinforcement	2.2	G AE													
		02921a	SD-03 Product Data															
			Equipment		FIO													

SUBMITTAL REGISTER

CONTRACT NO.

TITLE AND LOCATION
POL Storage Complex, Pope AFB, North Carolina

CONTRACTOR

ACTIVITY NO	TRANSMITTAL NO	SPEC SECT	DESCRIPTION ITEM SUBMITTED	PARAGRAPH #	CLASSIFICATION	GOVT OR A/E REVWR	CONTRACTOR: SCHEDULE DATES			CONTRACTOR ACTION			APPROVING AUTHORITY					
							SUBMIT	APPROVAL NEEDED BY	MATERIAL NEEDED BY	ACTION CODE	DATE OF ACTION	DATE FWD TO APPR AUTH/ DATE RCD FROM CONTR	DATE FWD TO OTHER REVIEWER	DATE RCD FROM OTH REVIEWER	ACTION CODE	DATE OF ACTION	MAILED TO CONTR/ DATE RCD FRM APPR AUTH	REMARKS
(a)	(b)	(c)	(d)	(e)	(f)		(g)	(h)	(i)	(j)	(k)	(l)	(m)	(n)	(o)	(p)	(q)	(r)
		02921a	Surface Erosion Control Material	2.8	FIO													
			Chemical Treatment Material		FIO													
			Delivery	1.4.1	FIO													
			Finished Grade and Topsoil	3.2.1	FIO													
			Topsoil	2.2	FIO													
			Quantity Check	3.5	FIO													
			Seed Establishment Period	3.9	FIO													
			Maintenance Record	3.9.3.5	FIO													
			Application of Pesticide	3.6	FIO													
			SD-04 Samples															
			Delivered Topsoil	1.4.1.1	FIO													
			Soil Amendments	2.3	FIO													
			Mulch	2.4	FIO													
			SD-06 Test Reports															
			Equipment Calibration	3.1.3	FIO													
			Soil Test	3.1.4	FIO													
			SD-07 Certificates															
			Seed	2.1	FIO													
			Topsoil	2.2	FIO													
			pH Adjuster	2.3.1	FIO													
			Fertilizer	2.3.2	FIO													
			Organic Material	2.3.4	FIO													
			Mulch	2.4	FIO													
			Pesticide	2.7	FIO													
		02922a	SD-03 Product Data															
			Chemical Treatment Material	1.4.3.2	FIO													

SUBMITTAL REGISTER

CONTRACT NO.

TITLE AND LOCATION
POL Storage Complex, Pope AFB, North Carolina

CONTRACTOR

ACTIVITY NO	TRANSMITTAL NO	SPEC SECT	DESCRIPTION ITEM SUBMITTED	PARAG # RAPH	CLASSIFICATION	GOVT OR A/E REVWR	CONTRACTOR: SCHEDULE DATES			CONTRACTOR ACTION			APPROVING AUTHORITY					
							SUBMIT	APPROVAL NEEDED BY	MATERIAL NEEDED BY	ACTION CODE	DATE OF ACTION	DATE FWD TO APPR AUTH/ DATE RCD FROM CONTR	DATE FWD TO OTHER REVIEWER	DATE RCD FROM OTH REVIEWER	ACTION CODE	DATE OF ACTION	MAILED TO CONTR/ DATE RCD FRM APPR AUTH	REMARKS
(a)	(b)	(c)	(d)	(e)	(f)		(g)	(h)	(i)	(j)	(k)	(l)	(m)	(n)	(o)	(p)	(q)	(r)
		02922a	Delivery	1.4.1	FIO													
			Finished Grade and Topsoil	3.2.1	FIO													
			Topsoil	2.2	FIO													
			Quantity Check	3.5	FIO													
			Sod Establishment Period	3.9	FIO													
			Maintenance Record	3.9.3.5	FIO													
			Application of Pesticide	3.6	FIO													
			SD-04 Samples															
			Delivered Topsoil	1.4.1.2	FIO													
			Soil Amendments	2.3	FIO													
			SD-06 Test Reports															
			Soil Test		FIO													
			SD-07 Certificates															
			Sod	2.1	FIO													
			Topsoil	2.2	FIO													
			Fertilizer	2.3.2	FIO													
			Organic Material	2.3.4	FIO													
			Pesticide	2.5	FIO													
		02930a	SD-02 Shop Drawings															
			Finished Grade, Topsoil and	3.2.1	FIO													
			Underground Utilities															
			SD-03 Product Data															
			Delivery	1.4.1	FIO													
			Plant Establishment Period	3.9	G RE													
			Maintenance Record	3.9.2.6	FIO													
			SD-04 Samples															

SUBMITTAL REGISTER

CONTRACT NO.

TITLE AND LOCATION
POL Storage Complex, Pope AFB, North Carolina

CONTRACTOR

ACTIVITY NO	TRANSMITTAL NO	SPEC SECT	DESCRIPTION ITEM SUBMITTED	PARAG # RAPH	CLASSIFICATION	GOVT OR A/E REVWR	CONTRACTOR: SCHEDULE DATES			CONTRACTOR ACTION			APPROVING AUTHORITY					
							SUBMIT	APPROVAL NEEDED BY	MATERIAL NEEDED BY	ACTION CODE	DATE OF ACTION	DATE FWD TO APPR AUTH/ DATE RCD FROM CONTR	DATE FWD TO OTHER REVIEWER	DATE RCD FROM OTH REVIEWER	ACTION CODE	DATE OF ACTION	MAILED TO CONTR/ DATE RCD FRM APPR AUTH	REMARKS
(a)	(b)	(c)	(d)	(e)	(f)		(g)	(h)	(i)	(j)	(k)	(l)	(m)	(n)	(o)	(p)	(q)	(r)
		02930a	Delivered Topsoil	1.4.1.3	FIO													
			Soil Amendments		FIO													
			Mulch	2.4	G RE													
			SD-07 Certificates															
			Plant Material	2.1	FIO													
			Topsoil	2.2	FIO													
			Fertilizer	2.3.1	FIO													
			Organic Material	2.3.2	FIO													
			Organic Mulch	2.4.2	FIO													
			Mycorrhizal Fungi Inoculum	2.12	FIO													
		03100a	SD-02 Shop Drawings															
			Formwork	3.1.1	G AE													
			SD-03 Product Data															
			Design	1.3	G AE													
			Form Materials	2.1	FIO													
			Form Releasing Agents	2.1.7	FIO													
		03150a	SD-02 Shop Drawings															
			Waterstops	2.4	G RE													
			SD-03 Product Data															
			Preformed Expansion Joint Filler	2.2	FIO													
			Sealant	2.3	FIO													
			Waterstops	2.4	FIO													
			SD-04 Samples															
			Field-Molded Type	2.3.4	FIO													
			Non-metallic Materials	2.4.3	FIO													
			SD-07 Certificates															

SUBMITTAL REGISTER

CONTRACT NO.

TITLE AND LOCATION
POL Storage Complex, Pope AFB, North Carolina

CONTRACTOR

ACTIVITY NO	TRANSMITTAL NO	SPEC SECT	DESCRIPTION ITEM SUBMITTED	PARAGRAPH #	CLASSIFICATION	GOVT OR A/E REVWR	CONTRACTOR: SCHEDULE DATES			CONTRACTOR ACTION			APPROVING AUTHORITY					
							SUBMIT	APPROVAL NEEDED BY	MATERIAL NEEDED BY	ACTION CODE	DATE OF ACTION	DATE FWD TO APPR AUTH/ DATE RCD FROM CONTR	DATE FWD TO OTHER REVIEWER	DATE RCD FROM OTH REVIEWER	ACTION CODE	DATE OF ACTION	MAILED TO CONTR/ DATE RCD FRM APPR AUTH	REMARKS
(a)	(b)	(c)	(d)	(e)	(f)		(g)	(h)	(i)	(j)	(k)	(l)	(m)	(n)	(o)	(p)	(q)	(r)
		03150a	Preformed Expansion Joint Filler	2.2	FIO													
			Sealant	2.3	FIO													
			Waterstops	2.4	FIO													
		03200a	SD-02 Shop Drawings															
			Reinforcement	3.1	G	AE												
			SD-07 Certificates															
			Reinforcing Steel	2.3	FIO													
		03300	SD-03 Product Data															
			Mixture Proportions	1.9	G	AE												
			SD-06 Test Reports															
			Testing and Inspection for	3.17	FIO													
			Contractor Quality Control															
			SD-07 Certificates															
			Qualifications	1.5	FIO													
		04200a	SD-02 Shop Drawings															
			Masonry Work		G	AE												
			SD-03 Product Data															
			Insulation	2.17	FIO													
			Cold Weather Installation	3.1.2	FIO													
			SD-04 Samples															
			Concrete Masonry Units (CMU)	2.4	FIO													
			Anchors, Ties, and Bar	2.12	FIO													
			Positioners															
			Expansion-Joint Material		FIO													
			Joint Reinforcement	2.13	FIO													
			Insulation	2.17	FIO													

SUBMITTAL REGISTER

CONTRACT NO.

TITLE AND LOCATION
POL Storage Complex, Pope AFB, North Carolina

CONTRACTOR

ACTIVITY NO	TRANSMITTAL NO	SPEC SECT	DESCRIPTION ITEM SUBMITTED	PARAG # RAPH	CLASSIFICATION	GOVT OR A/E REVWR	CONTRACTOR: SCHEDULE DATES			CONTRACTOR ACTION			APPROVING AUTHORITY					
							SUBMIT	APPROVAL NEEDED BY	MATERIAL NEEDED BY	ACTION CODE	DATE OF ACTION	DATE FWD TO APPR AUTH/ DATE RCD FROM CONTR	DATE FWD TO OTHER REVIEWER	DATE RCD FROM OTH REVIEWER	ACTION CODE	DATE OF ACTION	MAILED TO CONTR/ DATE RCD FRM APPR AUTH	REMARKS
(a)	(b)	(c)	(d)	(e)	(f)		(g)	(h)	(i)	(j)	(k)	(l)	(m)	(n)	(o)	(p)	(q)	(r)
		04200a	SD-06 Test Reports															
			Field Testing of Mortar	3.26.1	FIO													
			Field Testing of Grout	3.26.2	FIO													
			Masonry Cement		FIO													
			Fire-rated CMU	2.4.3	FIO													
			SD-07 Certificates															
			Concrete Masonry Units (CMU)	2.4	FIO													
			Anchors, Ties, and Bar	2.12	FIO													
			Positioners															
			Expansion-Joint Materials	2.16	FIO													
			Joint Reinforcement	2.13	FIO													
			Reinforcing Steel Bars and Rods	2.14	FIO													
			Masonry Cement		FIO													
			Mortar Coloring		FIO													
			Insulation	2.17	FIO													
			Insulation	2.17	FIO													
			Precast Concrete Items	2.8	FIO													
			Mortar Admixtures		FIO													
			Grout Admixtures		FIO													
		05106	SD-01 Preconstruction Submittals															
			Assembly Test		G	RE												
			Acceptance Testing	3.9	G	RE												
			SD-02 Shop Drawings															
			Detail Drawings	1.3	G	AE												
			SD-03 Product Data															
			Wheels	2.2	G	AE												

SUBMITTAL REGISTER

CONTRACT NO.

TITLE AND LOCATION
POL Storage Complex, Pope AFB, North Carolina

CONTRACTOR

ACTIVITY NO	TRANSMITTAL NO	SPEC SECT	DESCRIPTION ITEM SUBMITTED	PARAG # RAPH	CLASSIFICATION	GOVT OR A/E REVWR	CONTRACTOR: SCHEDULE DATES			CONTRACTOR ACTION			APPROVING AUTHORITY					
							SUBMIT	APPROVAL NEEDED BY	MATERIAL NEEDED BY	ACTION CODE	DATE OF ACTION	DATE FWD TO APPR AUTH/ DATE RCD FROM CONTR	DATE FWD TO OTHER REVIEWER	DATE RCD FROM OTH REVIEWER	ACTION CODE	DATE OF ACTION	MAILED TO CONTR/ DATE RCD FRM APPR AUTH	REMARKS
(a)	(b)	(c)	(d)	(e)	(f)		(g)	(h)	(i)	(j)	(k)	(l)	(m)	(n)	(o)	(p)	(q)	(r)
		05106	Materials List		G	AE												
			Welding	3.4.1	G	AE												
			Welding of Aluminum	3.4.2	G	AE												
			Steel Welding Repairs	3.4.4	G	AE												
			SD-07 Certificates															
			Welder Qualifications	1.4	FIO													
			Welding of Aluminum	3.4.2	G	AE												
		05120	SD-02 Shop Drawings															
			Erection drawings		G	AE												
			Fabrication drawings	1.7.1	G	AE												
			SD-03 Product Data															
			Shop primer	2.4	FIO													
			SD-06 Test Reports															
			Bolts, nuts, and washers	2.2	FIO													
			SD-07 Certificates															
			Steel	2.1	FIO													
			Bolts, nuts, and washers	2.2	FIO													
			Shop primer	2.4	FIO													
			Welding electrodes and rods	2.3.1	FIO													
			Welding procedures and	1.7.2.3	FIO													
			qualifications															
		05160	SD-05 Design Data															
			Design Analysis		G	AE												
			SD-02 Shop Drawings															
			Retrofit Roof Framing System		G	AE												
			SD-07 Certificates															

SUBMITTAL REGISTER

CONTRACT NO.

TITLE AND LOCATION
POL Storage Complex, Pope AFB, North Carolina

CONTRACTOR

ACTIVITY NO	TRANSMITTAL NO	SPEC SECT	DESCRIPTION ITEM SUBMITTED	PARAGRAPH #	CLASSIFICATION	GOVT OR A/E REVWR	CONTRACTOR: SCHEDULE DATES			CONTRACTOR ACTION			APPROVING AUTHORITY					
							SUBMIT	APPROVAL NEEDED BY	MATERIAL NEEDED BY	ACTION CODE	DATE OF ACTION	DATE FWD TO APPR AUTH/ DATE RCD FROM CONTR	DATE FWD TO OTHER REVIEWER	DATE RCD FROM OTH REVIEWER	ACTION CODE	DATE OF ACTION	MAILED TO CONTR/ DATE RCD FRM APPR AUTH	REMARKS
(a)	(b)	(c)	(d)	(e)	(f)		(g)	(h)	(i)	(j)	(k)	(l)	(m)	(n)	(o)	(p)	(q)	(r)
		05160	Welders Qualification		FIO													
		05210a	SD-02 Shop Drawings															
			Steel Joists	1.3	G AE													
			SD-05 Design Data															
			Design Computations		G AE													
			SD-07 Certificates															
			Steel Joists	1.3	G AE													
		05300a	SD-02 Shop Drawings															
			Deck Units	2.1	G AE													
			Accessories	2.5	G AE													
			Attachments	3.3	G AE													
			Holes and Openings	3.4	G AE													
			SD-03 Product Data															
			Deck Units	2.1	G AE													
			Attachments	3.3	G RE													
			SD-04 Samples															
			Deck Units	2.1	FIO													
			Accessories	2.5	FIO													
			SD-07 Certificates															
			Deck Units	2.1	FIO													
			Attachments	3.3	FIO													
		05500a	SD-02 Shop Drawings															
			Miscellaneous Metal Items	1.6	G AE													
			SD-03 Product Data															
			Design Analysis		G AE													
			SD-04 Samples															

SUBMITTAL REGISTER

CONTRACT NO.

TITLE AND LOCATION
POL Storage Complex, Pope AFB, North Carolina

CONTRACTOR

ACTIVITY NO	TRANSMITTAL NO	SPEC SECT	DESCRIPTION ITEM SUBMITTED	PARAG # RAPH	CLASSIFICATION	GOVT OR A/E REVWR	CONTRACTOR: SCHEDULE DATES			CONTRACTOR ACTION			APPROVING AUTHORITY					
							SUBMIT	APPROVAL NEEDED BY	MATERIAL NEEDED BY	ACTION CODE	DATE OF ACTION	DATE FWD TO APPR AUTH/ DATE RCD FROM CONTR	DATE FWD TO OTHER REVIEWER	DATE RCD FROM OTH REVIEWER	ACTION CODE	DATE OF ACTION	MAILED TO CONTR/ DATE RCD FRM APPR AUTH	REMARKS
(a)	(b)	(c)	(d)	(e)	(f)		(g)	(h)	(i)	(j)	(k)	(l)	(m)	(n)	(o)	(p)	(q)	(r)
		05500a	Miscellaneous Metal Items	1.6	FIO													
		06100a	SD-07 Certificates															
			Grading and Marking	2.1.1	FIO													
			Insulation	2.3	FIO													
		06200a	SD-02 Shop Drawings															
			Finish Carpentry		G	RE												
			Wood Items	2.1	G	RE												
			SD-04 Samples															
			Samples		G	AE												
		06410	SD-02 Shop Drawings															
			Prefabricated millwork		FIO													
			SD-04 Samples															
			Door Wood Finish		G	AE												
			Plastic Laminates and Solid		G	AE												
			Surfacing Material															
			Cabinet Hardware		FIO													
			Vinyl/Acrylic Corner Guard		FIO													
			Vinyl/Acrylic Sheet Goods		FIO													
		07131a	SD-02 Shop Drawings															
			Waterproofing	3.1	G	RE												
			SD-03 Product Data															
			Installation	3.2	G	RE												
			SD-07 Certificates															
			Materials	2.1	G	RE												
		07416	SD-02 Shop Drawings															

SUBMITTAL REGISTER

CONTRACT NO.

TITLE AND LOCATION
POL Storage Complex, Pope AFB, North Carolina

CONTRACTOR

ACTIVITY NO	TRANSMITTAL NO	SPEC SECT	DESCRIPTION ITEM SUBMITTED	PARAGRAPH #	CLASSIFICATION	GOVT OR A/E REVWR	CONTRACTOR: SCHEDULE DATES			CONTRACTOR ACTION			APPROVING AUTHORITY					
							SUBMIT	APPROVAL NEEDED BY	MATERIAL NEEDED BY	ACTION CODE	DATE OF ACTION	DATE FWD TO APPR AUTH/ DATE RCD FROM CONTR	DATE FWD TO OTHER REVIEWER	DATE RCD FROM OTH REVIEWER	ACTION CODE	DATE OF ACTION	MAILED TO CONTR/ DATE RCD FRM APPR AUTH	REMARKS
(a)	(b)	(c)	(d)	(e)	(f)		(g)	(h)	(i)	(j)	(k)	(l)	(m)	(n)	(o)	(p)	(q)	(r)
		07416	Structural Standing Seam Metal		G	AE												
			Roof System															
			SD-03 Product Data															
			Design Analysis		G	AE												
			SD-04 Samples															
			Accessories	2.3	G	AE												
			Roof Panels	2.1	G	AE												
			Factory Color Finish	2.6	G	AE												
			Fasteners	2.4	G	AE												
			Insulation	2.7	G	AE												
			Gaskets and Insulating	2.10	G	AE												
			Compounds															
			Sealant	2.9	G	AE												
			Concealed Anchor Clips	2.2	G	AE												
			Subpurlins	2.5	G	AE												
			EPDM Rubber Boots	2.12	G	AE												
			SD-06 Test Reports															
			Test Report for Uplift Resistance		G	AE												
			of the SSSMR															
			SD-07 Certificates															
			Qualifications		FIO													
			Structural Standing Seam Metal		G	AE												
			Roof System															
			Insulation	2.7	FIO													
		07510a	SD-07 Certificates															
			Bitumen	2.2	FIO													

SUBMITTAL REGISTER

CONTRACT NO.

TITLE AND LOCATION
POL Storage Complex, Pope AFB, North Carolina

CONTRACTOR

ACTIVITY NO	TRANSMITTAL NO	SPEC SECT	DESCRIPTION ITEM SUBMITTED	PARAGRAPH #	CLASSIFICATION	GOVT OR A/E REVWR	CONTRACTOR: SCHEDULE DATES			CONTRACTOR ACTION			APPROVING AUTHORITY					
							SUBMIT	APPROVAL NEEDED BY	MATERIAL NEEDED BY	ACTION CODE	DATE OF ACTION	DATE FWD TO APPR AUTH/ DATE RCD FROM CONTR	DATE FWD TO OTHER REVIEWER	DATE RCD FROM OTH REVIEWER	ACTION CODE	DATE OF ACTION	MAILED TO CONTR/ DATE RCD FRM APPR AUTH	REMARKS
(a)	(b)	(c)	(d)	(e)	(f)		(g)	(h)	(i)	(j)	(k)	(l)	(m)	(n)	(o)	(p)	(q)	(r)
		07510a	Felt	2.4	FIO													
		07600a	SD-02 Shop Drawings															
			Materials	2.1	G RE													
		07840a	SD-02 Shop Drawings															
			Firestopping Materials	2.1	FIO													
			SD-07 Certificates															
			Firestopping Materials	2.1	FIO													
			Installer Qualifications	1.5	FIO													
			Inspection	3.3	FIO													
		07900a	SD-03 Product Data															
			Backing	2.1	G RE													
			Bond-Breaker	2.2	G RE													
			Sealant	2.5	G RE													
			SD-07 Certificates															
			Sealant	2.5	FIO													
		08110	SD-02 Shop Drawings															
			Doors	2.1	FIO													
			Doors	2.1	FIO													
			Frames	2.7	FIO													
			Frames	2.7	FIO													
			Accessories		FIO													
			Weatherstripping	2.9	FIO													
			SD-03 Product Data															
			Doors	2.1	FIO													
			Frames	2.7	FIO													
			Accessories		FIO													

SUBMITTAL REGISTER

CONTRACT NO.

TITLE AND LOCATION
POL Storage Complex, Pope AFB, North Carolina

CONTRACTOR

ACTIVITY NO	TRANSMITTAL NO	SPEC SECT	DESCRIPTION ITEM SUBMITTED	PARAG # RAPH	CLASSIFICATION	GOVT OR A/E REVWR	CONTRACTOR: SCHEDULE DATES			CONTRACTOR ACTION			APPROVING AUTHORITY					
							SUBMIT	APPROVAL NEEDED BY	MATERIAL NEEDED BY	ACTION CODE	DATE OF ACTION	DATE FWD TO APPR AUTH/ DATE RCD FROM CONTR	DATE FWD TO OTHER REVIEWER	DATE RCD FROM OTH REVIEWER	ACTION CODE	DATE OF ACTION	MAILED TO CONTR/ DATE RCD FRM APPR AUTH	REMARKS
(a)	(b)	(c)	(d)	(e)	(f)		(g)	(h)	(i)	(j)	(k)	(l)	(m)	(n)	(o)	(p)	(q)	(r)
		08110	Weatherstripping	2.9	FIO													
		08210	SD-02 Shop Drawings															
			Wood Doors and Frames		FIO													
			Fire Doors	3.1.2	FIO													
			SD-04 Samples															
			Field Finishing	3.3	G AE													
			SD-07 Certificates															
			Fire Rated Doors	2.4	FIO													
			Adhesives	2.1.3	FIO													
		08520a	SD-02 Shop Drawings															
			Aluminum Windows		G AE													
			Insect Screens	2.3	G AE													
			SD-03 Product Data															
			Aluminum Windows		G AE													
			SD-04 Samples															
			Aluminum Windows		G AE													
			SD-06 Test Reports															
			Aluminum Windows		G AE													
			SD-07 Certificates															
			Aluminum Windows		FIO													
		08700	SD-02 Shop Drawings															
			Exit Devices	2.5	FIO													
			Drawings	2.1	FIO													
			SD-03 Product Data															
			Exit Device Accessories	2.5	FIO													
			Hardware Schedule	1.3	FIO													

SUBMITTAL REGISTER

CONTRACT NO.

TITLE AND LOCATION
POL Storage Complex, Pope AFB, North Carolina

CONTRACTOR

ACTIVITY NO	TRANSMITTAL NO	SPEC SECT	DESCRIPTION ITEM SUBMITTED	PARAGRAPH #	CLASSIFICATION	GOVT OR A/E REVWR	CONTRACTOR: SCHEDULE DATES			CONTRACTOR ACTION			APPROVING AUTHORITY					
							SUBMIT	APPROVAL NEEDED BY	MATERIAL NEEDED BY	ACTION CODE	DATE OF ACTION	DATE FWD TO APPR AUTH/ DATE RCD FROM CONTR	DATE FWD TO OTHER REVIEWER	DATE RCD FROM OTH REVIEWER	ACTION CODE	DATE OF ACTION	MAILED TO CONTR/ DATE RCD FRM APPR AUTH	REMARKS
(a)	(b)	(c)	(d)	(e)	(f)		(g)	(h)	(i)	(j)	(k)	(l)	(m)	(n)	(o)	(p)	(q)	(r)
		08700	Keying	2.7	FIO													
			SD-07 Certificates															
			Hardware and Accessories		FIO													
		08810a	SD-02 Shop Drawings															
			Installation	3.2	FIO													
			SD-03 Product Data															
			Insulating Glass	2.3	FIO													
			Glazing Accessories	2.11	FIO													
			SD-04 Samples															
			Insulating Glass	2.3	FIO													
			SD-07 Certificates															
			Insulating Glass	2.3	FIO													
		09250A	SD-02 Shop Drawings															
			Steel Framing		G	RE												
			Control Joints	3.3.6	G	RE												
			Fire-Resistant Assemblies	3.8	G	RE												
			SD-07 Certificates															
			Gypsum Board	2.4	FIO													
			Steel Framing		FIO													
			Fire-Rated Gypsum Board	2.4.2	FIO													
			Cementitious Backer Units	2.7	FIO													
		09310A	SD-03 Product Data															
			Tile	2.1	FIO													
			Tile	2.1	FIO													
			Setting-Bed	2.2	FIO													
			Mortar, Grout, and Adhesive	2.4	FIO													

SUBMITTAL REGISTER

CONTRACT NO.

TITLE AND LOCATION
POL Storage Complex, Pope AFB, North Carolina

CONTRACTOR

ACTIVITY NO	TRANSMITTAL NO	SPEC SECT	DESCRIPTION ITEM SUBMITTED	PARAGRAPH #	CLASSIFICATION	GOVT OR A/E REVWR	CONTRACTOR: SCHEDULE DATES			CONTRACTOR ACTION			APPROVING AUTHORITY					
							SUBMIT	APPROVAL NEEDED BY	MATERIAL NEEDED BY	ACTION CODE	DATE OF ACTION	DATE FWD TO APPR AUTH/ DATE RCD FROM CONTR	DATE FWD TO OTHER REVIEWER	DATE RCD FROM OTH REVIEWER	ACTION CODE	DATE OF ACTION	MAILED TO CONTR/ DATE RCD FRM APPR AUTH	REMARKS
(a)	(b)	(c)	(d)	(e)	(f)		(g)	(h)	(i)	(j)	(k)	(l)	(m)	(n)	(o)	(p)	(q)	(r)
		09310A	Mortar and Grout	3.3.4	FIO													
			SD-04 Samples															
			Tile and Grout		G AE													
			Accessories	2.1.5	G RE													
			SD-07 Certificates															
			Tile	2.1	FIO													
			Mortar, Grout, and Adhesive	2.4	FIO													
		09510A	SD-02 Shop Drawings															
			Approved Detail Drawings	1.3	FIO													
			SD-03 Product Data															
			Acoustical Ceiling Systems		FIO													
			SD-04 Samples															
			Acoustical Units	2.1	FIO													
			SD-06 Test Reports															
			Ceiling Attenuation Class and	2.8	FIO													
			Test															
			SD-07 Certificates															
			Acoustical Units	2.1	FIO													
		09650A	SD-03 Product Data															
			Resilient Flooring and		G AE													
			Accessories															
			SD-04 Samples															
			Flooring	3.2	G AE													
			SD-06 Test Reports															
			Moisture Test	3.3	FIO													
		09670A	SD-02 Shop Drawings															

SUBMITTAL REGISTER

CONTRACT NO.

TITLE AND LOCATION
POL Storage Complex, Pope AFB, North Carolina

CONTRACTOR

ACTIVITY NO	TRANSMITTAL NO	SPEC SECT	DESCRIPTION ITEM SUBMITTED	PARAG # RAPH	CLASSIFICATION	GOVT OR A/E REVWR	CONTRACTOR: SCHEDULE DATES			CONTRACTOR ACTION			APPROVING AUTHORITY					
							SUBMIT	APPROVAL NEEDED BY	MATERIAL NEEDED BY	ACTION CODE	DATE OF ACTION	DATE FWD TO APPR AUTH/ DATE RCD FROM CONTR	DATE FWD TO OTHER REVIEWER	DATE RCD FROM OTH REVIEWER	ACTION CODE	DATE OF ACTION	MAILED TO CONTR/ DATE RCD FRM APPR AUTH	REMARKS
(a)	(b)	(c)	(d)	(e)	(f)		(g)	(h)	(i)	(j)	(k)	(l)	(m)	(n)	(o)	(p)	(q)	(r)
		09670A	Industrial Resin-Based Flooring		G	AE												
			SD-03 Product Data															
			Resin Manufacturer's Instructions	3.1	G	AE												
			Installation	3.1	G	AE												
			SD-04 Samples															
			Industrial Resin-Based Flooring		G	AE												
			SD-06 Test Reports															
			Testing	3.3	FIO													
			SD-07 Certificates															
			Industrial Resin-Based Flooring		FIO													
			Qualification of Applicator	1.3	FIO													
		09680A	SD-02 Shop Drawings															
			Installation	3.4	G	RE												
			Molding	2.3	G	AE												
			SD-03 Product Data															
			Carpet		G	AE												
			Surface Preparation	3.1	G	RE												
			Installation	3.4	G	RE												
			SD-04 Samples															
			Carpet		G	AE												
			Molding	2.3	G	AE												
			SD-06 Test Reports															
			Moisture and Alkalinity Tests	3.2	G	RE												
			SD-07 Certificates															
			Carpet		FIO													

SUBMITTAL REGISTER

CONTRACT NO.

TITLE AND LOCATION
POL Storage Complex, Pope AFB, North Carolina

CONTRACTOR

ACTIVITY NO	TRANSMITTAL NO	SPEC SECT	DESCRIPTION ITEM SUBMITTED	PARAGRAPH #	CLASSIFICATION	GOVT OR A/E REVWR	CONTRACTOR: SCHEDULE DATES			CONTRACTOR ACTION			APPROVING AUTHORITY					
							SUBMIT	APPROVAL NEEDED BY	MATERIAL NEEDED BY	ACTION CODE	DATE OF ACTION	DATE FWD TO APPR AUTH/ DATE RCD FROM CONTR	DATE FWD TO OTHER REVIEWER	DATE RCD FROM OTH REVIEWER	ACTION CODE	DATE OF ACTION	MAILED TO CONTR/ DATE RCD FRM APPR AUTH	REMARKS
(a)	(b)	(c)	(d)	(e)	(f)		(g)	(h)	(i)	(j)	(k)	(l)	(m)	(n)	(o)	(p)	(q)	(r)
		09680A	SD-10 Operation and Maintenance															
			Data															
			Carpet		FIO													
			Cleaning and Protection	3.5	FIO													
		09720	SD-03 Product Data															
			Wallcoverings	2.1	G	AE												
			Installation	3.3	G	RE												
			Maintenance		G	RE												
			Clean-Up	3.4	G	RE												
			SD-04 Samples															
			Wallcoverings	2.1	G	AE												
			SD-07 Certificates															
			Wallcoverings	2.1	FIO													
			SD-08 Manufacturer’s Instructions															
			Wallcoverings	2.1	FIO													
			SD-10 Operation and Maintenance															
			Data															
			Wallcoverings	2.1	FIO													
		09900	SD-02 Shop Drawings															
			Piping identification	3.12	FIO													
			stencil	3.12	FIO													
			SD-03 Product Data															
			Coating	2.1	FIO													
			Manufacturer's Technical Data	2.1	FIO													
			Sheets															
			SD-04 Samples															

SUBMITTAL REGISTER

CONTRACT NO.

TITLE AND LOCATION
POL Storage Complex, Pope AFB, North Carolina

CONTRACTOR

ACTIVITY NO	TRANSMITTAL NO	SPEC SECT	DESCRIPTION ITEM SUBMITTED	PARAGRAPH #	CLASSIFICATION	GOVT OR A/E REVWR	CONTRACTOR: SCHEDULE DATES			CONTRACTOR ACTION			APPROVING AUTHORITY					REMARKS
							SUBMIT	APPROVAL NEEDED BY	MATERIAL NEEDED BY	ACTION CODE	DATE OF ACTION	DATE FWD TO APPR AUTH/ DATE RCD FROM CONTR	DATE FWD TO OTHER REVIEWER	DATE RCD FROM OTH REVIEWER	ACTION CODE	DATE OF ACTION	MAILED TO CONTR/ DATE RCD FRM APPR AUTH	
(a)	(b)	(c)	(d)	(e)	(f)		(g)	(h)	(i)	(j)	(k)	(l)	(m)	(n)	(o)	(p)	(q)	(r)
		09900	Color	1.9	G AE													
			SD-07 Certificates															
			Applicator's qualifications	1.3	FIO													
			Qualification Testing	1.4.1.2	FIO													
			SD-08 Manufacturer’s Instructions															
			Application instructions		FIO													
			Mixing	3.8.2	FIO													
			Manufacturer's Material Safety	1.7.2	FIO													
			Data Sheets															
			SD-10 Operation and Maintenance															
			Data															
			Coatings	2.1	G RE													
		09965A	SD-03 Product Data															
			Accident Prevention Plan		G RE													
			Respiratory Protection Program		G RE													
			Ventilation Assessment		G RE													
			Medical Surveillance Plan		G RE													
			Worker Protection Plan		G RE													
			SD-04 Samples															
			Specification and Proprietary		G RE													
			Paints															
			Thinners		G RE													
			Inspection and Operation Records		G RE													
			SD-07 Certificates															
			Qualifications and Experience		G RE													

SUBMITTAL REGISTER

CONTRACT NO.

TITLE AND LOCATION
POL Storage Complex, Pope AFB, North Carolina

CONTRACTOR

ACTIVITY NO	TRANSMITTAL NO	SPEC SECT	DESCRIPTION ITEM SUBMITTED	PARAG # RAPH	CLASSIFICATION	GOVT OR A/E REVWR	CONTRACTOR: SCHEDULE DATES			CONTRACTOR ACTION			APPROVING AUTHORITY					
							SUBMIT	APPROVAL NEEDED BY	MATERIAL NEEDED BY	ACTION CODE	DATE OF ACTION	DATE FWD TO APPR AUTH/ DATE RCD FROM CONTR	DATE FWD TO OTHER REVIEWER	DATE RCD FROM OTH REVIEWER	ACTION CODE	DATE OF ACTION	MAILED TO CONTR/ DATE RCD FRM APPR AUTH	REMARKS
(a)	(b)	(c)	(d)	(e)	(f)		(g)	(h)	(i)	(j)	(k)	(l)	(m)	(n)	(o)	(p)	(q)	(r)
		09965A	Qualified Coating Thickness		G	RE												
			Gages															
		09971	SD-05 Design Data															
			Containment System	1.4.1.1	FIO													
			SD-06 Test Reports															
			Coatings Qualification Test	1.4.2.2	G	RE												
			Reports															
			Coating Sample Test Reports	3.2.3	G	RE												
			Abrasive Sample Test Reports	3.2.4	G	RE												
			Daily Inspection Reports	3.8.2.2	G	RE												
			Recycled Metallic Abrasive Field	1.4.2.3	G	RE												
			Test Reports (Daily and Weekly)															
			SD-07 Certificates															
			Work Plan	1.4.3.1	G	RE												
			Qualifications of Certified	1.4.3.2	G	RE												
			Industrial Hygienist (CIH)															
			Qualifications of Testing	1.4.3.3	G	RE												
			Laboratory for Coatings															
			Qualifications of Testing	1.4.3.4	G	RE												
			Laboratory for Abrasive															
			Qualifications of Coating	1.4.3.5	G	RE												
			Contractors															
			Qualifications of Coating	1.4.3.6	G	RE												
			Manufacturer's Representative															
			Coating Materials	1.4.3.8	G	RE												

SUBMITTAL REGISTER

CONTRACT NO.

TITLE AND LOCATION
POL Storage Complex, Pope AFB, North Carolina

CONTRACTOR

ACTIVITY NO	TRANSMITTAL NO	SPEC SECT	DESCRIPTION ITEM SUBMITTED	PARAGRAPH #	CLASSIFICATION	GOVT OR A/E REVWR	CONTRACTOR: SCHEDULE DATES			CONTRACTOR ACTION			APPROVING AUTHORITY					
							SUBMIT	APPROVAL NEEDED BY	MATERIAL NEEDED BY	ACTION CODE	DATE OF ACTION	DATE FWD TO APPR AUTH/ DATE RCD FROM CONTR	DATE FWD TO OTHER REVIEWER	DATE RCD FROM OTH REVIEWER	ACTION CODE	DATE OF ACTION	MAILED TO CONTR/ DATE RCD FRM APPR AUTH	REMARKS
(a)	(b)	(c)	(d)	(e)	(f)		(g)	(h)	(i)	(j)	(k)	(l)	(m)	(n)	(o)	(p)	(q)	(r)
		09971	Coating System Component	1.4.3.9	G	RE												
			Compatibility															
			Non-metallic Abrasive	1.4.3.10	G	RE												
			Metallic Abrasive	1.4.3.11	G	RE												
			SD-08 Manufacturer's Instructions															
			Coating System Instructions	1.4.4.2	G	RE												
			SD-11 Closeout Submittals															
			Disposal of Used Abrasive	3.6.5	G	RE												
			Inspection Logbook	3.8.2.3	G	RE												
		09973	SD-05 Design Data															
			Environmental Control System	1.4.1.1	G	RE												
			SD-06 Test Reports															
			Coating Sample Test Reports	3.3.3	G	RE												
			Abrasive Sample Test Reports	3.3.4	G	RE												
			Daily Inspection Reports	3.11.2.2	G	RE												
			Recycled Metallic Abrasive Field	1.4.2.1	G	RE												
			Test Reports (Daily and Weekly)															
			SD-07 Certificates															
			Work Plan	1.4.3.1	G	RE												
			Qualifications of Certified	1.4.3.2	G	RE												
			Industrial Hygienist (CIH)															
			Qualifications of Testing	1.4.3.3	G	RE												
			Laboratory for Coatings															
			Qualifications of Testing	1.4.3.4	G	RE												
			Laboratory for Abrasive															

SUBMITTAL REGISTER

CONTRACT NO.

TITLE AND LOCATION
POL Storage Complex, Pope AFB, North Carolina

CONTRACTOR

ACTIVITY NO	TRANSMITTAL NO	SPEC SECT	DESCRIPTION ITEM SUBMITTED	PARAGRAPH #	CLASSIFICATION	GOVT OR A/E REVWR	CONTRACTOR: SCHEDULE DATES			CONTRACTOR ACTION			APPROVING AUTHORITY					
							SUBMIT	APPROVAL NEEDED BY	MATERIAL NEEDED BY	ACTION CODE	DATE OF ACTION	DATE FWD TO APPR AUTH/ DATE RCD FROM CONTR	DATE FWD TO OTHER REVIEWER	DATE RCD FROM OTH REVIEWER	ACTION CODE	DATE OF ACTION	MAILED TO CONTR/ DATE RCD FRM APPR AUTH	REMARKS
(a)	(b)	(c)	(d)	(e)	(f)		(g)	(h)	(i)	(j)	(k)	(l)	(m)	(n)	(o)	(p)	(q)	(r)
		09973	Qualifications of Coating	1.4.3.5	G	RE												
			Contractors															
			Qualifications of Coating	1.4.3.6	G	RE												
			Manufacturer's Representative															
			Epoxy Coating Materials	1.4.3.9	G	RE												
			Non-metallic Abrasive	1.4.3.10	G	RE												
			Metallic Abrasive	1.4.3.11	G	RE												
			SD-08 Manufacturer’s Instructions															
			Coating System Instructions	1.4.4.2	G	RE												
			SD-11 Closeout Submittals															
			Disposal of Used Abrasive	3.9.5	G	RE												
			Inspection Logbook	3.11.2.3	G	RE												
		10100A	SD-03 Product Data															
			Visual Display Boards		FIO													
			SD-04 Samples															
			Materials		FIO													
		10160A	SD-02 Shop Drawings															
			Approved Detail Drawings	1.3	FIO													
			SD-03 Product Data															
			Toilet Partition System		FIO													
			SD-04 Samples															
			Toilet Partition System		G	AE												
		10440A	SD-02 Shop Drawings															
			Detail Drawings		G	AE												
			SD-03 Product Data															
			Installation	3.1	G	AE												

SUBMITTAL REGISTER

CONTRACT NO.

TITLE AND LOCATION
POL Storage Complex, Pope AFB, North Carolina

CONTRACTOR

ACTIVITY NO	TRANSMITTAL NO	SPEC SECT	DESCRIPTION ITEM SUBMITTED	PARAGRAPH #	CLASSIFICATION	GOVT OR A/E REVWR	CONTRACTOR: SCHEDULE DATES			CONTRACTOR ACTION			APPROVING AUTHORITY					REMARKS
							SUBMIT	APPROVAL NEEDED BY	MATERIAL NEEDED BY	ACTION CODE	DATE OF ACTION	DATE FWD TO APPR AUTH/ DATE RCD FROM CONTR	DATE FWD TO OTHER REVIEWER	DATE RCD FROM OTH REVIEWER	ACTION CODE	DATE OF ACTION	MAILED TO CONTR/ DATE RCD FRM APPR AUTH	
(a)	(b)	(c)	(d)	(e)	(f)		(g)	(h)	(i)	(j)	(k)	(l)	(m)	(n)	(o)	(p)	(q)	(r)
		10440A	SD-04 Samples															
			Interior Signage	1.3	G AE													
			SD-10 Operation and Maintenance															
			Data															
			Approved Manufacturer's	3.1	FIO													
			Instructions															
			Protection and Cleaning	3.1.2	FIO													
		10500	SD-02 Shop Drawings															
			Shop Drawings		FIO													
			SD-03 Product Data															
			Manufacturer's Data		FIO													
			SD-04 Samples															
			Locker Color		G AE													
		10800A	SD-03 Product Data															
			Finishes	2.1.2	FIO													
			Accessory Items	2.2	FIO													
			SD-04 Samples															
			Finishes	2.1.2	FIO													
			Accessory Items	2.2	FIO													
			SD-10 Operation and Maintenance															
			Data															
			Electric Hand Dryer	2.2.26	FIO													
		11310A	SD-02 Shop Drawings															
			Equipment Installation	3.1	G RE													
			SD-03 Product Data															

SUBMITTAL REGISTER

CONTRACT NO.

TITLE AND LOCATION
POL Storage Complex, Pope AFB, North Carolina

CONTRACTOR

ACTIVITY NO	TRANSMITTAL NO	SPEC SECT	DESCRIPTION ITEM SUBMITTED	PARAGRAPH #	CLASSIFICATION	GOVT OR A/E REVWR	CONTRACTOR: SCHEDULE DATES			CONTRACTOR ACTION			APPROVING AUTHORITY					
							SUBMIT	APPROVAL NEEDED BY	MATERIAL NEEDED BY	ACTION CODE	DATE OF ACTION	DATE FWD TO APPR AUTH/ DATE RCD FROM CONTR	DATE FWD TO OTHER REVIEWER	DATE RCD FROM OTH REVIEWER	ACTION CODE	DATE OF ACTION	MAILED TO CONTR/ DATE RCD FRM APPR AUTH	REMARKS
(a)	(b)	(c)	(d)	(e)	(f)		(g)	(h)	(i)	(j)	(k)	(l)	(m)	(n)	(o)	(p)	(q)	(r)
		11310A	Sewage and Sludge Pump		G	G												
			System															
			Spare Parts		G	RE												
			SD-06 Test Reports															
			Field Testing and Adjusting	3.3	G	RE												
			Equipment															
			SD-10 Operation and Maintenance															
			Data															
			Sewage and Sludge Pump		G	RE												
			System															
		11312N	SD-03 Product Data															
			Pipe and fittings	2.1	G	RE												
			Check valves	2.2.2	G	AE												
			Gate valves	2.2.1	G	AE												
			Submersible sewage grinder	2.3	G	AE												
			pumps															
			Pump motor	2.4	G	AE												
			Flexible flanged coupling	2.1.5	G	RE												
			SD-10 Operation and Maintenance															
			Data															
			Submersible Sewage Grinder	2.3	G	RE												
			Pumps															
		11601N	SD-02 Shop Drawings															
			layout	1.4.2	G	AE												
			hood		FIO													
			SD-03 Product Data															

SUBMITTAL REGISTER

CONTRACT NO.

TITLE AND LOCATION
POL Storage Complex, Pope AFB, North Carolina

CONTRACTOR

ACTIVITY NO	TRANSMITTAL NO	SPEC SECT	DESCRIPTION ITEM SUBMITTED	PARAGRAPH #	CLASSIFICATION	GOVT OR A/E REVWR	CONTRACTOR: SCHEDULE DATES			CONTRACTOR ACTION			APPROVING AUTHORITY					
							SUBMIT	APPROVAL NEEDED BY	MATERIAL NEEDED BY	ACTION CODE	DATE OF ACTION	DATE FWD TO APPR AUTH/ DATE RCD FROM CONTR	DATE FWD TO OTHER REVIEWER	DATE RCD FROM OTH REVIEWER	ACTION CODE	DATE OF ACTION	MAILED TO CONTR/ DATE RCD FRM APPR AUTH	REMARKS
(a)	(b)	(c)	(d)	(e)	(f)		(g)	(h)	(i)	(j)	(k)	(l)	(m)	(n)	(o)	(p)	(q)	(r)
		11601N	Fumehood assembly	2.2.2	G	AE												
			Radio isotope fumehood		G	RE												
			SD-04 Samples															
			Exterior hood paint	1.4.1	G	AE												
			SD-06 Test Reports															
			Fumehood test	1.4.2	G	AE												
			SD-08 Manufacturer’s Instructions															
			Fumehood assembly	2.2.2	FIO													
			Radio isotope fumehood		FIO													
			SD-10 Operation and Maintenance															
			Data															
			Fumehood assembly	2.2.2	FIO													
			Radio isotope fumehood		FIO													
		12350A	SD-02 Shop Drawings															
			Approved Detail Drawings		G	AE												
			SD-03 Product Data															
			Casework	2.1	G	AE												
			SD-04 Samples															
			Casework	2.1	G	AE												
			SD-07 Certificates															
			Casework	2.1	FIO													
		12490A	SD-02 Shop Drawings															
			Approved Detail Drawings	3.2	G	RE												
			SD-03 Product Data															
			Window Treatments	3.2	G	AE												
			SD-04 Samples															

SUBMITTAL REGISTER

CONTRACT NO.

TITLE AND LOCATION
POL Storage Complex, Pope AFB, North Carolina

CONTRACTOR

ACTIVITY NO	TRANSMITTAL NO	SPEC SECT	DESCRIPTION ITEM SUBMITTED	PARAGRAPH #	CLASSIFICATION	GOVT OR A/E REVWR	CONTRACTOR: SCHEDULE DATES			CONTRACTOR ACTION			APPROVING AUTHORITY					
							SUBMIT	APPROVAL NEEDED BY	MATERIAL NEEDED BY	ACTION CODE	DATE OF ACTION	DATE FWD TO APPR AUTH/ DATE RCD FROM CONTR	DATE FWD TO OTHER REVIEWER	DATE RCD FROM OTH REVIEWER	ACTION CODE	DATE OF ACTION	MAILED TO CONTR/ DATE RCD FRM APPR AUTH	REMARKS
(a)	(b)	(c)	(d)	(e)	(f)		(g)	(h)	(i)	(j)	(k)	(l)	(m)	(n)	(o)	(p)	(q)	(r)
		12490A	Window Treatments	3.2	G	AE												
		13100A	SD-02 Shop Drawings															
			Drawings		G	AE												
			SD-07 Certificates															
			Materials	2.1	G	RE												
		13110A	SD-02 Shop Drawings															
			Drawings	1.3.9	G	AE												
			Contractor's Modifications	1.3.2	G	RE												
			SD-03 Product Data															
			Equipment		G	RE												
			Spare Parts	3.9	FIO													
			SD-06 Test Reports															
			Tests and Measurements	3.5	G	RE												
			Contractor's Modifications	1.3.2	G	RE												
			SD-07 Certificates															
			Cathodic Protection System		G	RE												
			Services of 'Corrosion Expert'	1.3.1	G	RE												
			SD-10 Operation and Maintenance															
			Data															
			Cathodic Protection System		FIO													
			Training Course	3.6	FIO													
		13112A	SD-02 Shop Drawings															
			Drawings		G	AE												
			Contractor's Modifications	1.3.1	G	AE												
			SD-03 Product Data															
			Miscellaneous Materials	2.4	G	RE												

SUBMITTAL REGISTER

CONTRACT NO.

TITLE AND LOCATION
POL Storage Complex, Pope AFB, North Carolina

CONTRACTOR

ACTIVITY NO	TRANSMITTAL NO	SPEC SECT	DESCRIPTION ITEM SUBMITTED	PARAGRAPH #	CLASSIFICATION	GOVT OR A/E REVWR	CONTRACTOR: SCHEDULE DATES			CONTRACTOR ACTION			APPROVING AUTHORITY					
							SUBMIT	APPROVAL NEEDED BY	MATERIAL NEEDED BY	ACTION CODE	DATE OF ACTION	DATE FWD TO APPR AUTH/ DATE RCD FROM CONTR	DATE FWD TO OTHER REVIEWER	DATE RCD FROM OTH REVIEWER	ACTION CODE	DATE OF ACTION	MAILED TO CONTR/ DATE RCD FRM APPR AUTH	REMARKS
(a)	(b)	(c)	(d)	(e)	(f)		(g)	(h)	(i)	(j)	(k)	(l)	(m)	(n)	(o)	(p)	(q)	(r)
		13112A	Equipment		G	RE												
			Spare Parts		FIO													
			SD-06 Test Reports															
			Tests and Measurements	3.5	G	AE												
			Contractor's Modifications	1.3.1	G	RE												
			SD-07 Certificates															
			Cathodic Protection System	1.3	G	RE												
			Services of 'Corrosion Expert'	1.3.7	G	AE												
			SD-10 Operation and Maintenance															
			Data															
			Cathodic Protection System	1.3	FIO													
			Training Course	3.6	FIO													
		13125	SD-02 Shop Drawings															
			Drawings		G	AE												
			SD-03 Product Data															
			Design Analysis		G	AE												
			Manufacturer's Instructions		G	AE												
			Erection Procedures		G	AE												
			Qualifications	1.3.2	G	AE												
			SD-07 Certificates															
			Canopy Systems		FIO													
		13280A	SD-03 Product Data															
			Respiratory Protection Program	1.12	G	RE												
			Cleanup and Disposal	3.11	G	RE												
			Detailed Drawings		G	RE												
			Materials and Equipment		G	RE												

SUBMITTAL REGISTER

CONTRACT NO.

TITLE AND LOCATION
POL Storage Complex, Pope AFB, North Carolina

CONTRACTOR

ACTIVITY NO	TRANSMITTAL NO	SPEC SECT	DESCRIPTION ITEM SUBMITTED	PARAGRAPH #	CLASSIFICATION	GOVT OR A/E REVWR	CONTRACTOR: SCHEDULE DATES			CONTRACTOR ACTION			APPROVING AUTHORITY					
							SUBMIT	APPROVAL NEEDED BY	MATERIAL NEEDED BY	ACTION CODE	DATE OF ACTION	DATE FWD TO APPR AUTH/ DATE RCD FROM CONTR	DATE FWD TO OTHER REVIEWER	DATE RCD FROM OTH REVIEWER	ACTION CODE	DATE OF ACTION	MAILED TO CONTR/ DATE RCD FRM APPR AUTH	REMARKS
(a)	(b)	(c)	(d)	(e)	(f)		(g)	(h)	(i)	(j)	(k)	(l)	(m)	(n)	(o)	(p)	(q)	(r)
		13280A	Accident Prevention Plan		G	RE												
			Qualifications	1.5	G	RE												
			Training Program	1.11	FIO													
			Medical Requirements	1.10	FIO													
			Encapsulants		FIO													
			SD-06 Test Reports															
			Exposure Assessment and Air	3.9	G	RE												
			Monitoring															
			Licenses, Permits and	1.14	G	RE												
			Notifications															
			SD-07 Certificates															
			Vacuum, Filtrationand Ventilation		FIO													
			Equipment															
		13286N	SD-07 Certificates															
			Qualifications of CIH	1.8.1	G	RE												
			Training Certification		G	RE												
			PCB and Lamp Removal Work	1.8.2	G	RE												
			Plan															
			PCB and Lamp Disposal Plan		G	RE												
			SD-11 Closeout Submittals															
			Transporter certification	3.5.2	G	RE												
			Certification of Decontamination	3.2.4	FIO													
			Certificate of Disposal and/or	3.5.2.1	G	RE												
			recycling															
			DD Form 1348-1		FIO													
			Testing results		FIO													

SUBMITTAL REGISTER

CONTRACT NO.

TITLE AND LOCATION
POL Storage Complex, Pope AFB, North Carolina

CONTRACTOR

ACTIVITY NO	TRANSMITTAL NO	SPEC SECT	DESCRIPTION ITEM SUBMITTED	PARAG # RAPH	CLASSIFICATION	GOVT OR A/E REVWR	CONTRACTOR: SCHEDULE DATES			CONTRACTOR ACTION			APPROVING AUTHORITY					
							SUBMIT	APPROVAL NEEDED BY	MATERIAL NEEDED BY	ACTION CODE	DATE OF ACTION	DATE FWD TO APPR AUTH/ DATE RCD FROM CONTR	DATE FWD TO OTHER REVIEWER	DATE RCD FROM OTH REVIEWER	ACTION CODE	DATE OF ACTION	MAILED TO CONTR/ DATE RCD FRM APPR AUTH	REMARKS
(a)	(b)	(c)	(d)	(e)	(f)		(g)	(h)	(i)	(j)	(k)	(l)	(m)	(n)	(o)	(p)	(q)	(r)
		13851A	SD-02 Shop Drawings															
			Fire Alarm Reporting System	1.4.1	G AE													
			SD-03 Product Data															
			Storage Batteries	2.2	G AE													
			Voltage Drop		G AE													
			Special Tools and Spare Parts	2.7.4	FIO													
			FIO		FIO													
			Technical Data and Computer	1.4	G AE													
			Software															
			Training	3.6	G RE													
			Testing	3.5	G RE													
			SD-06 Test Reports															
			Testing	3.5	G RE													
			SD-07 Certificates															
			Equipment		G RE													
			Qualifications	1.3.7	G RE													
			SD-10 Operation and Maintenance															
			Data															
			Technical Data and Computer	1.4	G RE													
			Software															
		13930A	SD-02 Shop Drawings															
			Sprinkler System Shop Drawings		G AE													
			As-Built Shop Drawings		FIO													
			SD-03 Product Data															
			Fire Protection Related Submittals	3.1	FIO													

SUBMITTAL REGISTER

CONTRACT NO.

TITLE AND LOCATION
POL Storage Complex, Pope AFB, North Carolina

CONTRACTOR

ACTIVITY NO	TRANSMITTAL NO	SPEC SECT	DESCRIPTION ITEM SUBMITTED	PARAG # RAPH	CLASSIFICATION	GOVT OR A/E REVWR	CONTRACTOR: SCHEDULE DATES			CONTRACTOR ACTION			APPROVING AUTHORITY					REMARKS
							SUBMIT	APPROVAL NEEDED BY	MATERIAL NEEDED BY	ACTION CODE	DATE OF ACTION	DATE FWD TO APPR AUTH/ DATE RCD FROM CONTR	DATE FWD TO OTHER REVIEWER	DATE RCD FROM OTH REVIEWER	ACTION CODE	DATE OF ACTION	MAILED TO CONTR/ DATE RCD FRM APPR AUTH	
(a)	(b)	(c)	(d)	(e)	(f)		(g)	(h)	(i)	(j)	(k)	(l)	(m)	(n)	(o)	(p)	(q)	(r)
		13930A	Load Calculations for Sizing Sway		G	AE												
			Bracing															
			Components and Equipment Data		G	AE												
			Hydraulic Calculations	1.7	G	AE												
			Spare Parts		FIO													
			Preliminary Tests Procedures		G	F												
			Final Acceptance Test Procedures		G	F												
			On-site Training Schedule		G	F												
			Preliminary Tests	3.10	G	F												
			Final Acceptance Test		G	F												
			Fire Protection Specialist		G	F												
			Qualifications															
			Sprinkler System Installer	1.9	G	F												
			Qualifications															
			SD-06 Test Reports															
			Preliminary Tests Report		G	F												
			Final Acceptance Test Report		G	F												
			SD-07 Certificates															
			Fire Protection Specialist		G	F												
			Inspection															
			SD-10 Operation and Maintenance															
			Data															
			Wet Pipe Sprinkler System		FIO													
		15050	SD-02 Shop Drawings															
			Meter		G	AE												
			Venturi Tubes		G	AE												

SUBMITTAL REGISTER

CONTRACT NO.

TITLE AND LOCATION
POL Storage Complex, Pope AFB, North Carolina

CONTRACTOR

ACTIVITY NO	TRANSMITTAL NO	SPEC SECT	DESCRIPTION ITEM SUBMITTED	PARAG # RAPH	CLASSIFICATION	GOVT OR A/E REVWR	CONTRACTOR: SCHEDULE DATES SUBMIT	APPROVAL NEEDED BY	MATERIAL NEEDED BY	CONTRACTOR ACTION ACTION CODE	DATE OF ACTION	DATE FWD TO APPR AUTH/ DATE RCD FROM CONTR	APPROVING AUTHORITY DATE FWD TO OTHER REVIEWER	DATE RCD FROM OTH REVIEWER	ACTION CODE	DATE OF ACTION	MAILED TO CONTR/ DATE RCD FRM APPR AUTH	REMARKS
(a)	(b)	(c)	(d)	(e)	(f)		(g)	(h)	(i)	(j)	(k)	(l)	(m)	(n)	(o)	(p)	(q)	(r)
		15050	Flange Pit		G	AE												
			High Point Vent and Low Point	2.12	G	AE												
			Drain Pits															
			Product Recovery Tank Vault		G	AE												
			SD-03 Product Data															
			Pressure Gages	2.5	G	AE												
			Automatic Pump Controls	2.8	G	AE												
			Meters	2.9	G	G												
			Meters	2.9	G	G												
			Product Recovery Tank and	2.10	G	AE												
			Accessories															
			Flange Pit		G	AE												
			High Point Vent and Low Point	2.12	G	AE												
			Drain Pits															
			Operating Tank Level Indicator	2.13	G	AE												
			Venturi Tubes		G	AE												
			SD-06 Test Reports															
			Leak Detection System		G	AE												
			SD-07 Certificates															
			Coating Products		G	AE												
			UL Labeled products		G	AE												
			STI-P3 labeled products		G	AE												
			Pits		G	AE												
			SD-10 Operation and Maintenance															
			Data															
			Pressure Gauges		G	AE												

SUBMITTAL REGISTER

CONTRACT NO.

TITLE AND LOCATION
POL Storage Complex, Pope AFB, North Carolina

CONTRACTOR

ACTIVITY NO	TRANSMITTAL NO	SPEC SECT	DESCRIPTION ITEM SUBMITTED	PARAGRAPH #	CLASSIFICATION	GOVT OR A/E REVWR	CONTRACTOR: SCHEDULE DATES			CONTRACTOR ACTION			APPROVING AUTHORITY					MAILED TO CONTR/ DATE RCD FRM APPR AUTH	REMARKS
							SUBMIT	APPROVAL NEEDED BY	MATERIAL NEEDED BY	ACTION CODE	DATE OF ACTION	DATE FWD TO APPR AUTH/ DATE RCD FROM CONTR	DATE FWD TO OTHER REVIEWER	DATE RCD FROM OTH REVIEWER	ACTION CODE	DATE OF ACTION			
(a)	(b)	(c)	(d)	(e)	(f)		(g)	(h)	(i)	(j)	(k)	(l)	(m)	(n)	(o)	(p)	(q)	(r)	
		15050	Automatic Pump Controls	2.8	G	AE													
			Product Recovery Tank and	2.10	G	AE													
			Accessories																
			Operating Tank Level Indicator	2.13	G	AE													
		15060	SD-03 Product Data																
			Piping		G	AE													
			Fittings		G	AE													
			Valves		G	AE													
			Strainers		G	AE													
			Flexible Hoses		G	AE													
			Lightning Surge Arrester		G	AE													
			Protective Coatings		G	AE													
			Sample Connections		G	AE													
			Isolating Gasket Kits		G	AE													
			Gaskets		G	AE													
			Purge Blocks		G	AE													
			Automatic Air Vent		G	AE													
			SD-06 Test Reports																
			Pneumatic Test		FIO														
			Hydrostatic Test		FIO														
			SD-07 Certificates																
			Qualifications of Welders		FIO														
			Pipe		FIO														
			Fittings		FIO														
			Valves		FIO														

SUBMITTAL REGISTER

CONTRACT NO.

TITLE AND LOCATION
POL Storage Complex, Pope AFB, North Carolina

CONTRACTOR

ACTIVITY NO	TRANSMITTAL NO	SPEC SECT	DESCRIPTION ITEM SUBMITTED	PARAGRAPH #	CLASSIFICATION	GOVT OR A/E REVWR	CONTRACTOR: SCHEDULE DATES			CONTRACTOR ACTION			APPROVING AUTHORITY					MAILED TO CONTR/ DATE RCD FRM APPR AUTH	REMARKS
							SUBMIT	APPROVAL NEEDED BY	MATERIAL NEEDED BY	ACTION CODE	DATE OF ACTION	DATE FWD TO APPR AUTH/ DATE RCD FROM CONTR	DATE FWD TO OTHER REVIEWER	DATE RCD FROM OTH REVIEWER	ACTION CODE	DATE OF ACTION			
(a)	(b)	(c)	(d)	(e)	(f)		(g)	(h)	(i)	(j)	(k)	(l)	(m)	(n)	(o)	(p)	(q)	(r)	
		15060	Pipe/Fitting Inspector-Owners		FIO														
			(factory)																
			Pipe Weld Radiograph Inspector's		FIO														
			Certification																
			Isolating Gasket Kits		FIO														
			Survey of final elevation of buried		FIO														
			fuel pipe																
			SD-10 Operation and Maintenance																
			Data																
			Operation and Maintenance		G AE														
			Manuals																
		15070A	SD-02 Shop Drawings																
			Contractor Designed Bracing	1.2.4	G RE														
			SD-03 Product Data																
			Contractor Designed Bracing	1.2.4	G RE														
		15080A	SD-04 Samples																
			Thermal Insulation Materials		G RE														
		15101	SD-02 Shop Drawings																
			Control Valves		G AE														
			SD-03 Product Data																
			Control Valves		G AE														
			SD-06 Test Reports																
			Control Valves		FIO														
			SD-07 Certificates																
			Previous Air Force/Military		G AE														
			Projects																

SUBMITTAL REGISTER

CONTRACT NO.

TITLE AND LOCATION
POL Storage Complex, Pope AFB, North Carolina

CONTRACTOR

ACTIVITY NO	TRANSMITTAL NO	SPEC SECT	DESCRIPTION ITEM SUBMITTED	PARAGRAPH #	CLASSIFICATION	GOVT OR A/E REVWR	CONTRACTOR: SCHEDULE DATES			CONTRACTOR ACTION			APPROVING AUTHORITY					MAILED TO CONTR/ DATE RCD FRM APPR AUTH	REMARKS
							SUBMIT	APPROVAL NEEDED BY	MATERIAL NEEDED BY	ACTION CODE	DATE OF ACTION	DATE FWD TO APPR AUTH/ DATE RCD FROM CONTR	DATE FWD TO OTHER REVIEWER	DATE RCD FROM OTH REVIEWER	ACTION CODE	DATE OF ACTION			
(a)	(b)	(c)	(d)	(e)	(f)		(g)	(h)	(i)	(j)	(k)	(l)	(m)	(n)	(o)	(p)	(q)	(r)	
		15101	Qualified Engineers		G	AE													
			Field Assistance		G	AE													
			SD-10 Operation and Maintenance																
			Data																
			Operation and Maintenance		G	AE													
			Manuals																
		15140	SD-02 Shop Drawings																
			Fueling Pump (FP)		G	AE													
			Offload Pump (OP)		G	AE													
			Water Draw-off Pump (WP)		G	AE													
			Fuel Transfer Pump (FTP)		G	AE													
			SD-03 Product Data																
			Fueling Pump (FP)		G	AE													
			Offload Pump (OP)		G	AE													
			Water Draw-off Pump (WP)		G	AE													
			Fuel Transfer Pump (FTP)		G	AE													
			SD-06 Test Reports																
			Certified Test Curves		FIO														
			SD-07 Certificates																
			Fueling Pump (FP)		G	AE													
			Offload Pump (OP)		G	AE													
			Water Draw-off Pump (WP)		G	AE													
			Fuel Transfer Pump (FTP)		G	AE													
			SD-10 Operation and Maintenance																
			Data																

SUBMITTAL REGISTER

CONTRACT NO.

TITLE AND LOCATION
POL Storage Complex, Pope AFB, North Carolina

CONTRACTOR

ACTIVITY NO	TRANSMITTAL NO	SPEC SECT	DESCRIPTION ITEM SUBMITTED	PARAG # RAPH	CLASSIFICATION	GOVT OR A/E REVWR	CONTRACTOR: SCHEDULE DATES			CONTRACTOR ACTION			APPROVING AUTHORITY					
							SUBMIT	APPROVAL NEEDED BY	MATERIAL NEEDED BY	ACTION CODE	DATE OF ACTION	DATE FWD TO APPR AUTH/ DATE RCD FROM CONTR	DATE FWD TO OTHER REVIEWER	DATE RCD FROM OTH REVIEWER	ACTION CODE	DATE OF ACTION	MAILED TO CONTR/ DATE RCD FRM APPR AUTH	REMARKS
(a)	(b)	(c)	(d)	(e)	(f)		(g)	(h)	(i)	(j)	(k)	(l)	(m)	(n)	(o)	(p)	(q)	(r)
		15140	Operation and Maintenance		G	AE												
			Manuals															
		15176	SD-01 Preconstruction Submittals															
			Welding	1.4.2	G	RE												
			Tests	3.2	G	RE												
			Inspections	3.3	G	RE												
			SD-02 Shop Drawings															
			Fuel Storage Tank		G	AE												
			Fuel Storage Tank Erection		G	RE												
			SD-03 Product Data															
			Fuel Storage System		G	AE												
			Gauge Table	3.4.2.2	G	RE												
			SD-06 Test Reports															
			Steel Mill Reports		G	AE												
			Tests	3.2	G	RE												
			Inspections	3.3	G	RE												
			SD-07 Certificates															
			Welding	1.4.2	G	RE												
			Verification of Dimensions	1.8.1	FIO													
			Radiographic Inspections	1.4.3	G	RE												
			Experience	1.4.1	G	RE												
		15177	SD-07 Certificates															
			Contractor's Qualification		G	RE												
			Statement															
		15190A	SD-02 Shop Drawings															
			Gas Piping System	3.2	G	RE												

SUBMITTAL REGISTER

CONTRACT NO.

TITLE AND LOCATION
POL Storage Complex, Pope AFB, North Carolina

CONTRACTOR

ACTIVITY NO	TRANSMITTAL NO	SPEC SECT	DESCRIPTION ITEM SUBMITTED	PARAGRAPH #	CLASSIFICATION	GOVT OR A/E REVWR	CONTRACTOR: SCHEDULE DATES			CONTRACTOR ACTION			APPROVING AUTHORITY					
							SUBMIT	APPROVAL NEEDED BY	MATERIAL NEEDED BY	ACTION CODE	DATE OF ACTION	DATE FWD TO APPR AUTH/ DATE RCD FROM CONTR	DATE FWD TO OTHER REVIEWER	DATE RCD FROM OTH REVIEWER	ACTION CODE	DATE OF ACTION	MAILED TO CONTR/ DATE RCD FRM APPR AUTH	REMARKS
(a)	(b)	(c)	(d)	(e)	(f)		(g)	(h)	(i)	(j)	(k)	(l)	(m)	(n)	(o)	(p)	(q)	(r)
		15190A	SD-03 Product Data															
			Qualifications		G	RE												
			SD-06 Test Reports															
			Testing		G	RE												
			Pressure Tests	3.16.1	G	RE												
			Test With Gas	3.16.3	G	RE												
		15400	SD-02 Shop Drawings															
			Plumbing System		G	RE												
			Electrical Schematics		G	RE												
			SD-05 Design Data															
			Welding		G	RE												
			Vibration-Absorbing Features		G	RE												
			SD-06 Test Reports															
			Tests, Flushing and Disinfection	3.9	G	RE												
			Backflow Prevention Assembly		G	RE												
			Tests															
			SD-07 Certificates															
			Materials and Equipment		FIO													
			Bolts		G	RE												
			SD-08 Manufacturer’s Instructions															
			Plumbing System		G	RE												
			SD-10 Operation and Maintenance															
			Data															
			Plumbing System		FIO													
		15569A	SD-02 Shop Drawings															
			Heating System		G	AE												

SUBMITTAL REGISTER

CONTRACT NO.

TITLE AND LOCATION
POL Storage Complex, Pope AFB, North Carolina

CONTRACTOR

ACTIVITY NO	TRANSMITTAL NO	SPEC SECT	DESCRIPTION ITEM SUBMITTED	PARAG # RAPH	CLASSIFICATION	GOVT OR A/E REVWR	CONTRACTOR: SCHEDULE DATES			CONTRACTOR ACTION			APPROVING AUTHORITY					
							SUBMIT	APPROVAL NEEDED BY	MATERIAL NEEDED BY	ACTION CODE	DATE OF ACTION	DATE FWD TO APPR AUTH/ DATE RCD FROM CONTR	DATE FWD TO OTHER REVIEWER	DATE RCD FROM OTH REVIEWER	ACTION CODE	DATE OF ACTION	MAILED TO CONTR/ DATE RCD FRM APPR AUTH	REMARKS
(a)	(b)	(c)	(d)	(e)	(f)		(g)	(h)	(i)	(j)	(k)	(l)	(m)	(n)	(o)	(p)	(q)	(r)
		15569A	Piping Installation	3.2	G	AE												
			Installation	3.2.6.4	G	RE												
			Installation	3.2.12	G	RE												
			SD-03 Product Data															
			Manufacturer's Catalog Data		G	AE												
			Spare Parts Data		G	RE												
			Heating System Tests	3.8	G	RE												
			Fuel System Tests	3.10	G	RE												
			Welding	1.3.6	G	RE												
			Qualification		G	RE												
			Field Instructions	3.11	G	AE												
			Tests	3.3	G	RE												
			SD-06 Test Reports															
			Heating System Tests	3.8	G	RE												
			Fuel System Tests	3.10	G	RE												
			SD-07 Certificates															
			Bolts	2.10.12.3	FIO													
			Continuous Emissions Monitoring		G	RE												
			SD-10 Operation and Maintenance															
			Data															
			Heating System		G	RE												
		15650	SD-01 Preconstruction Submittals															
			Factory Tests		FIO													
			Tests	3.2	FIO													
			Demonstrations	3.6	FIO													
			SD-02 Shop Drawings															

SUBMITTAL REGISTER

CONTRACT NO.

TITLE AND LOCATION
POL Storage Complex, Pope AFB, North Carolina

CONTRACTOR

ACTIVITY NO	TRANSMITTAL NO	SPEC SECT	DESCRIPTION ITEM SUBMITTED	PARAG # RAPH	CLASSIFICATION	GOVT OR A/E REVWR	CONTRACTOR: SCHEDULE DATES			CONTRACTOR ACTION			APPROVING AUTHORITY					
							SUBMIT	APPROVAL NEEDED BY	MATERIAL NEEDED BY	ACTION CODE	DATE OF ACTION	DATE FWD TO APPR AUTH/ DATE RCD FROM CONTR	DATE FWD TO OTHER REVIEWER	DATE RCD FROM OTH REVIEWER	ACTION CODE	DATE OF ACTION	MAILED TO CONTR/ DATE RCD FRM APPR AUTH	REMARKS
(a)	(b)	(c)	(d)	(e)	(f)		(g)	(h)	(i)	(j)	(k)	(l)	(m)	(n)	(o)	(p)	(q)	(r)
		15650	Central Refrigerated		G AE													
			Air-Conditioning System															
			SD-03 Product Data															
			Central Refrigerated		G AE													
			Air-Conditioning System															
			Spare Parts		G RE													
			Qualifications	1.4	FIO													
			SD-06 Test Reports															
			Factory Tests		FIO													
			SD-07 Certificates															
			Verification of Dimensions	1.7.1	G AE													
			Central Refrigerated		G AE													
			Air-Conditioning System															
			SD-08 Manufacturer’s Instructions															
			Posted Instructions		G RE													
			SD-09 Manufacturer’s Field															
			Reports															
			System Performance Tests	3.2.2	G RE													
			Inspections	3.3	G RE													
			SD-10 Operation and Maintenance															
			Data															
			Operation Manual		FIO													
			Maintenance Manual		FIO													
		15653	SD-02 Shop Drawings															
			Drawings	1.5.2	G AE													
			SD-03 Product Data															

SUBMITTAL REGISTER

CONTRACT NO.

TITLE AND LOCATION
POL Storage Complex, Pope AFB, North Carolina

CONTRACTOR

ACTIVITY NO	TRANSMITTAL NO	SPEC SECT	DESCRIPTION ITEM SUBMITTED	PARAG # RAPH	CLASSIFICATION	GOVT OR A/E REVWR	CONTRACTOR: SCHEDULE DATES			CONTRACTOR ACTION			APPROVING AUTHORITY					
							SUBMIT	APPROVAL NEEDED BY	MATERIAL NEEDED BY	ACTION CODE	DATE OF ACTION	DATE FWD TO APPR AUTH/ DATE RCD FROM CONTR	DATE FWD TO OTHER REVIEWER	DATE RCD FROM OTH REVIEWER	ACTION CODE	DATE OF ACTION	MAILED TO CONTR/ DATE RCD FRM APPR AUTH	REMARKS
(a)	(b)	(c)	(d)	(e)	(f)		(g)	(h)	(i)	(j)	(k)	(l)	(m)	(n)	(o)	(p)	(q)	(r)
		15653	Air-Conditioning/Heat Pump		G	AE												
			System															
			Spare Parts Data		G	RE												
			Framed Instructions	3.1.19	G	RE												
			Qualifications	1.3	G	RE												
			Verification of Dimensions	1.5.1	G	RE												
			Tests	3.2	FIO													
			Demonstrations	3.5	G	RE												
			SD-06 Test Reports															
			Tests	3.2	G	RE												
			System Performance Tests	3.2.6	G	RE												
			SD-07 Certificates															
			Air-Conditioning/Heat Pump		FIO													
			System															
			Service Organizations		FIO													
			SD-10 Operation and Maintenance															
			Data															
			Operation	2.3	G	RE												
			Operation	3.5	G	RE												
			Maintenance Manuals	3.5	G	RE												
		15880	SD-02 Shop Drawings															
			Filter Separator		G	AE												
			SD-07 Certificates															
			Filter Separator		FIO													
			SD-10 Operation and Maintenance															
			Data															

SUBMITTAL REGISTER

CONTRACT NO.

TITLE AND LOCATION
POL Storage Complex, Pope AFB, North Carolina

CONTRACTOR

ACTIVITY NO	TRANSMITTAL NO	SPEC SECT	DESCRIPTION ITEM SUBMITTED	PARAG # RAPH	CLASSIFICATION	GOVT OR A/E REVWR	CONTRACTOR: SCHEDULE DATES			CONTRACTOR ACTION			APPROVING AUTHORITY					
							SUBMIT	APPROVAL NEEDED BY	MATERIAL NEEDED BY	ACTION CODE	DATE OF ACTION	DATE FWD TO APPR AUTH/ DATE RCD FROM CONTR	DATE FWD TO OTHER REVIEWER	DATE RCD FROM OTH REVIEWER	ACTION CODE	DATE OF ACTION	MAILED TO CONTR/ DATE RCD FRM APPR AUTH	REMARKS
(a)	(b)	(c)	(d)	(e)	(f)		(g)	(h)	(i)	(j)	(k)	(l)	(m)	(n)	(o)	(p)	(q)	(r)
		15880	Filter Separator		G	AE												
		15895A	SD-02 Shop Drawings															
			Drawings	3.1.9	G	AE												
			Installation	3.1	G	RE												
			SD-03 Product Data															
			Components and Equipment	2.1	G	AE												
			Test Procedures		G	RE												
			Welding Procedures	3.1.1.1	G	RE												
			System Diagrams		G	RE												
			Similar Services		G	RE												
			Welding Joints		FIO													
			Testing, Adjusting and Balancing	3.6	G	RE												
			Field Training	3.8	FIO													
			SD-06 Test Reports															
			Performance Tests	3.7	G	RE												
			SD-07 Certificates															
			Bolts	2.5.2.2	FIO													
			SD-10 Operation and Maintenance															
			Data															
			Operating and Maintenance	3.8	G	RE												
			Instructions															
		15899	SD-01 Preconstruction Submittals															
			System Start-up Plan		G	AE												
			SD-06 Test Reports															
			Test Reports		G	RE												
			Final Reports		FIO													

SUBMITTAL REGISTER

CONTRACT NO.

TITLE AND LOCATION
POL Storage Complex, Pope AFB, North Carolina

CONTRACTOR

ACTIVITY NO	TRANSMITTAL NO	SPEC SECT	DESCRIPTION ITEM SUBMITTED	PARAGRAPH #	CLASSIFICATION	GOVT OR A/E REVWR	CONTRACTOR: SCHEDULE DATES			CONTRACTOR ACTION			APPROVING AUTHORITY					MAILED TO CONTR/ DATE RCD FRM APPR AUTH	REMARKS
							SUBMIT	APPROVAL NEEDED BY	MATERIAL NEEDED BY	ACTION CODE	DATE OF ACTION	DATE FWD TO APPR AUTH/ DATE RCD FROM CONTR	DATE FWD TO OTHER REVIEWER	DATE RCD FROM OTH REVIEWER	ACTION CODE	DATE OF ACTION			
(a)	(b)	(c)	(d)	(e)	(f)		(g)	(h)	(i)	(j)	(k)	(l)	(m)	(n)	(o)	(p)	(q)	(r)
		15899	SD-11 Closeout Submittals																
			Certification of Entire System		G	RE													
		15951A	SD-02 Shop Drawings																
			HVAC Control System	3.1.1	G	AE													
			SD-03 Product Data																
			Service Organizations		G	AE													
			Equipment Compliance Booklet	1.6	G	AE													
			Commissioning Procedures	3.4	G	RE													
			Performance Verification Test	1.6	G	RE													
			Procedures																
			Training	3.6	G	RE													
			SD-06 Test Reports																
			Commissioning Report	3.6.2	G	RE													
			Performance Verification Test	3.5.3	G	RE													
			SD-10 Operation and Maintenance																
			Data																
			Operation Manual	1.5	G	RE													
			Maintenance and Repair Manual	1.6	G	RE													
		15970	SD-02 Shop Drawings																
			Shop Drawing	3.4.1	G	AE													
			SD-03 Product Data																
			Pump Control Panel (PCP) and	2.1	G	AE													
			Components																
			Pump Control Panel (PCP) and	3.1	G	AE													
			Components																

SUBMITTAL REGISTER

CONTRACT NO.

TITLE AND LOCATION
POL Storage Complex, Pope AFB, North Carolina

CONTRACTOR

ACTIVITY NO	TRANSMITTAL NO	SPEC SECT	DESCRIPTION ITEM SUBMITTED	PARAG # RAPH	CLASSIFICATION	GOVT OR A/E REVWR	CONTRACTOR: SCHEDULE DATES			CONTRACTOR ACTION			APPROVING AUTHORITY					
							SUBMIT	APPROVAL NEEDED BY	MATERIAL NEEDED BY	ACTION CODE	DATE OF ACTION	DATE FWD TO APPR AUTH/ DATE RCD FROM CONTR	DATE FWD TO OTHER REVIEWER	DATE RCD FROM OTH REVIEWER	ACTION CODE	DATE OF ACTION	MAILED TO CONTR/ DATE RCD FRM APPR AUTH	REMARKS
(a)	(b)	(c)	(d)	(e)	(f)		(g)	(h)	(i)	(j)	(k)	(l)	(m)	(n)	(o)	(p)	(q)	(r)
		15970	Programmable Logical Controller	2.2	G AE													
			(PLC) Hardware and Software															
			Programmable Logical Controller	3.2	G AE													
			(PLC) Hardware and Software															
			Graphics Display Panel	2.3	G AE													
			Graphics Display Panel	3.3	G AE													
			Tools and Spare Parts	3.5	FIO													
			SD-06 Test Reports															
			Certified Pump Control Panel	3.1.2	FIO													
			(PCP) Shop Test Report															
			Record of Test	3.4.2	FIO													
			SD-07 Certificates															
			Experience and Qualifications	1.5	G AE													
			Plan for Instructing Personnel	3.4.3	G RE													
			Testing Plan	3.4.2	G AE													
			SD-10 Operation and Maintenance															
			Data															
			Operation and Maintenance		G RE													
			Manuals															
		15990A	SD-02 Shop Drawings															
			TAB Schematic Drawings and	3.3	G RE													
			Report Forms															
			SD-03 Product Data															
			TAB Related HVAC Submittals	3.2	G RE													
			TAB Procedures	3.5.1	G RE													
			Calibration	1.4	G RE													

SUBMITTAL REGISTER

CONTRACT NO.

TITLE AND LOCATION
POL Storage Complex, Pope AFB, North Carolina

CONTRACTOR

ACTIVITY NO	TRANSMITTAL NO	SPEC SECT	DESCRIPTION ITEM SUBMITTED	PARAGRAPH #	CLASSIFICATION	GOVT OR A/E REVWR	CONTRACTOR: SCHEDULE DATES			CONTRACTOR ACTION			APPROVING AUTHORITY					
							SUBMIT	APPROVAL NEEDED BY	MATERIAL NEEDED BY	ACTION CODE	DATE OF ACTION	DATE FWD TO APPR AUTH/ DATE RCD FROM CONTR	DATE FWD TO OTHER REVIEWER	DATE RCD FROM OTH REVIEWER	ACTION CODE	DATE OF ACTION	MAILED TO CONTR/ DATE RCD FRM APPR AUTH	REMARKS
(a)	(b)	(c)	(d)	(e)	(f)		(g)	(h)	(i)	(j)	(k)	(l)	(m)	(n)	(o)	(p)	(q)	(r)
		15990A	Systems Readiness Check	3.5.2	G RE													
			TAB Execution	3.5.1	G RE													
			TAB Verification	3.5.4	G RE													
			SD-06 Test Reports															
			Design Review Report	3.1	G RE													
			Systems Readiness Check	3.5.2	G RE													
			TAB Report	3.5.3	G RE													
			TAB Verification Report	3.5.4	G RE													
			SD-07 Certificates															
			Ductwork Leak Testing	3.4	G RE													
			TAB Firm	1.5.1	G RE													
			TAB Specialist	1.5.2	G RE													
		15995A	SD-03 Product Data															
			Commissioning Team	3.1	G RE													
			Test Procedures		G RE													
			Test Schedule		G RE													
			SD-06 Test Reports															
			Test Reports		G RE													
		16070A	SD-02 Shop Drawings															
			Lighting Fixtures in Buildings	3.2	G RE													
			Contractor Designed Bracing	1.3.4	G RE													
			SD-03 Product Data															
			Lighting Fixtures in Buildings	3.2	G RE													
			Contractor Designed Bracing	1.3.4	G RE													
		16264	SD-02 Shop Drawings															
			Layout		G RE													

SUBMITTAL REGISTER

CONTRACT NO.

TITLE AND LOCATION
POL Storage Complex, Pope AFB, North Carolina

CONTRACTOR

ACTIVITY NO	TRANSMITTAL NO	SPEC SECT	DESCRIPTION ITEM SUBMITTED	PARAG # RAPH	CLASSIFICATION	GOVT OR A/E REVWR	CONTRACTOR: SCHEDULE DATES			CONTRACTOR ACTION			APPROVING AUTHORITY					MAILED TO CONTR/ DATE RCD FRM APPR AUTH	REMARKS
							SUBMIT	APPROVAL NEEDED BY	MATERIAL NEEDED BY	ACTION CODE	DATE OF ACTION	DATE FWD TO APPR AUTH/ DATE RCD FROM CONTR	DATE FWD TO OTHER REVIEWER	DATE RCD FROM OTH REVIEWER	ACTION CODE	DATE OF ACTION			
(a)	(b)	(c)	(d)	(e)	(f)		(g)	(h)	(i)	(j)	(k)	(l)	(m)	(n)	(o)	(p)	(q)	(r)
		16264	Drawings		G	RE													
			Acceptance	3.9	G	RE													
			SD-03 Product Data																
			Performance Tests	3.5.5	G	RE													
			Sound Limitations	2.6	FIO														
			Integral Main Fuel Storage Tank		G	AE													
			Day Tank		G	RE													
			Vibration Isolation	1.4.8	G	RE													
			Field Engineer	1.4.10	G	RE													
			Site Welding		G	RE													
			Site Visit		FIO														
			SD-06 Test Reports																
			Onsite Inspection and Tests	3.5	G	RE													
			SD-07 Certificates																
			Sound limitations	2.6	FIO														
			Materials and Equipment	2.1	G	RE													
			Inspections	3.5.3	G	RE													
		16370A	SD-02 Shop Drawings																
			Electrical Distribution System	3.11.3	G	RE													
			As-Built Drawings		FIO														
			SD-03 Product Data																
			Nameplates	2.3	FIO														
			Material and Equipment	2.2	FIO														
			General Installation Requirements	3.1	FIO														
			SD-06 Test Reports																
			Factory Tests	2.22	FIO														

SUBMITTAL REGISTER

CONTRACT NO.

TITLE AND LOCATION
POL Storage Complex, Pope AFB, North Carolina

CONTRACTOR

ACTIVITY NO	TRANSMITTAL NO	SPEC SECT	DESCRIPTION ITEM SUBMITTED	PARAGRAPH #	CLASSIFICATION	GOVT OR A/E REVWR	CONTRACTOR: SCHEDULE DATES			CONTRACTOR ACTION			APPROVING AUTHORITY					
							SUBMIT	APPROVAL NEEDED BY	MATERIAL NEEDED BY	ACTION CODE	DATE OF ACTION	DATE FWD TO APPR AUTH/ DATE RCD FROM CONTR	DATE FWD TO OTHER REVIEWER	DATE RCD FROM OTH REVIEWER	ACTION CODE	DATE OF ACTION	MAILED TO CONTR/ DATE RCD FRM APPR AUTH	REMARKS
(a)	(b)	(c)	(d)	(e)	(f)		(g)	(h)	(i)	(j)	(k)	(l)	(m)	(n)	(o)	(p)	(q)	(r)
		16370A	Field Testing	3.11	G RE													
			Operating Tests	3.11.9	G RE													
			SD-07 Certificates															
			Material and Equipment	2.2	FIO													
			SD-10 Operation and Maintenance															
			Data															
			Electrical Distribution System	3.11.3	G RE													
		16375A	SD-02 Shop Drawings															
			Electrical Distribution System	3.11.3	G AE													
			As-Built Drawings		G RE													
			SD-03 Product Data															
			Nameplates	2.2	FIO													
			Material and Equipment	2.1	FIO													
			General Installation Requirements	3.1	G RE													
			SD-06 Test Reports															
			Factory Tests	2.17	G RE													
			Field Testing	3.11	G RE													
			Operating Tests	3.11.13	G RE													
			Cable Installation	3.2.1.4	G RE													
			SD-07 Certificates															
			Material and Equipment	2.1	FIO													
			Cable Joints	3.3	FIO													
			Cable Installer Qualifications		G RE													
			SD-10 Operation and Maintenance															
			Data															
			Electrical Distribution System	3.11.3	G RE													

SUBMITTAL REGISTER

CONTRACT NO.

TITLE AND LOCATION
POL Storage Complex, Pope AFB, North Carolina

CONTRACTOR

ACTIVITY NO	TRANSMITTAL NO	SPEC SECT	DESCRIPTION ITEM SUBMITTED	PARAG # RAPH	CLASSIFICATION	GOVT OR A/E REVWR	CONTRACTOR: SCHEDULE DATES			CONTRACTOR ACTION			APPROVING AUTHORITY					
							SUBMIT	APPROVAL NEEDED BY	MATERIAL NEEDED BY	ACTION CODE	DATE OF ACTION	DATE FWD TO APPR AUTH/ DATE RCD FROM CONTR	DATE FWD TO OTHER REVIEWER	DATE RCD FROM OTH REVIEWER	ACTION CODE	DATE OF ACTION	MAILED TO CONTR/ DATE RCD FRM APPR AUTH	REMARKS
(a)	(b)	(c)	(d)	(e)	(f)		(g)	(h)	(i)	(j)	(k)	(l)	(m)	(n)	(o)	(p)	(q)	(r)
		16415A	SD-02 Shop Drawings															
			Interior Electrical Equipment		G	AE												
			SD-03 Product Data															
			Fault Current and Protective		G	AE												
			Device Coordination Study															
			Manufacturer's Catalog		G	AE												
			Material, Equipment, and Fixture		FIO													
			Lists															
			Installation Procedures		G	RE												
			As-Built Drawings	1.2.6	G	RE												
			Onsite Tests	3.24.2	G	RE												
			SD-06 Test Reports															
			Factory Test Reports		G	RE												
			Field Test Plan		G	RE												
			Field Test Reports	3.22	G	RE												
			SD-07 Certificates															
			Materials and Equipment	1.4	FIO													
		16528A	SD-02 Shop Drawings															
			Lighting System	1.3.1	G	RE												
			Detail Drawings		G	RE												
			As-Built Drawings	3.16.3	G	RE												
			SD-03 Product Data															
			Equipment and Materials		G	RE												
			Spare Parts		FIO													
			SD-06 Test Reports															
			Operating Test	3.16.2	G	RE												

SUBMITTAL REGISTER

CONTRACT NO.

TITLE AND LOCATION
POL Storage Complex, Pope AFB, North Carolina

CONTRACTOR

ACTIVITY NO	TRANSMITTAL NO	SPEC SECT	DESCRIPTION ITEM SUBMITTED	PARAG # RAPH	CLASSIFICATION	GOVT OR A/E REVWR	CONTRACTOR: SCHEDULE DATES			CONTRACTOR ACTION			APPROVING AUTHORITY					MAILED TO CONTR/ DATE RCD FRM APPR AUTH	REMARKS
							SUBMIT	APPROVAL NEEDED BY	MATERIAL NEEDED BY	ACTION CODE	DATE OF ACTION	DATE FWD TO APPR AUTH/ DATE RCD FROM CONTR	DATE FWD TO OTHER REVIEWER	DATE RCD FROM OTH REVIEWER	ACTION CODE	DATE OF ACTION			
(a)	(b)	(c)	(d)	(e)	(f)		(g)	(h)	(i)	(j)	(k)	(l)	(m)	(n)	(o)	(p)	(q)	(r)
		16528A	Ground Resistance	3.16.3	G	RE												
			Measurements															
			SD-10 Operation and Maintenance															
			Data															
			Lighting System	1.3.1	G	RE												
		16710A	SD-02 Shop Drawings															
			Premises Distribution System	1.7	G	RE												
			Record Drawings		G	RE												
			SD-03 Product Data															
			Record Keeping and	1.8	G	RE												
			Documentation															
			Spare Parts		FIO													
			Manufacturer's Recommendations		G	RE												
			Test Plan		G	RE												
			Qualifications	1.4	G	RE												
			SD-06 Test Reports															
			Test Reports		FIO													
			SD-07 Certificates															
			Premises Distribution System	1.7	FIO													
			Materials and Equipment	2.1	FIO													
			Installers		G	RE												
		16711A	SD-02 Shop Drawings															
			Telephone System		G	AE												
			Installation	3.1	G	RE												
			Record Drawings		G	RE												
			SD-03 Product Data															

SUBMITTAL REGISTER

CONTRACT NO.

TITLE AND LOCATION
POL Storage Complex, Pope AFB, North Carolina

CONTRACTOR

ACTIVITY NO	TRANSMITTAL NO	SPEC SECT	DESCRIPTION ITEM SUBMITTED	PARAGRAPH #	CLASSIFICATION	GOVT OR A/E REVWR	CONTRACTOR: SCHEDULE DATES			CONTRACTOR ACTION			APPROVING AUTHORITY					MAILED TO CONTR/ DATE RCD FRM APPR AUTH	REMARKS
							SUBMIT	APPROVAL NEEDED BY	MATERIAL NEEDED BY	ACTION CODE	DATE OF ACTION	DATE FWD TO APPR AUTH/ DATE RCD FROM CONTR	DATE FWD TO OTHER REVIEWER	DATE RCD FROM OTH REVIEWER	ACTION CODE	DATE OF ACTION		
(a)	(b)	(c)	(d)	(e)	(f)		(g)	(h)	(i)	(j)	(k)	(l)	(m)	(n)	(o)	(p)	(q)	(r)
		16711A	Spare Parts		FIO													
			Equipment	1.5.2	FIO													
			Installation	3.1	G	RE												
			Acceptance Tests	3.5	G	RE												
			Cutover and Records	3.4	G	RE												
			SD-06 Test Reports															
			Acceptance Tests	3.5	G	RE												
			SD-07 Certificates															
			Telephone System		G	RE												
			Qualifications	1.4	FIO													

SECTION TABLE OF CONTENTS

DIVISION 01 - GENERAL REQUIREMENTS

SECTION 01351A

SAFETY, HEALTH, AND EMERGENCY RESPONSE (HTRW/UST)

01/01

PART 1 GENERAL

1.1 REFERENCES
1.2 DESCRIPTION OF WORK
1.3 SUBMITTALS
1.4 REGULATORY REQUIREMENTS
1.5 PRECONSTRUCTION SAFETY CONFERENCE
1.6 SAFETY AND HEALTH PROGRAM
1.7 SITE SAFETY AND HEALTH PLAN
1.7.1 Acceptance and Modifications
1.7.2 Availability
1.8 SITE DESCRIPTION AND CONTAMINATION CHARACTERIZATION
1.8.1 Project/Site Conditions
1.9 SITE TASKS
1.10 STAFF ORGANZATION, QUALIFICATION AND RESPONSIBILITIES
1.10.1 Safety and Health Manager
1.10.2 Site Safety and Health Officer
1.10.3 Persons Certified in First Aid and CPR
1.11 TRAINING
1.11.1 General Hazardous Waste Operations Training
1.11.2 Initial Session (Pre-entry Briefing)
1.11.3 Periodic Sessions
1.12 PERSONAL PROTECTIVE EQUIPMENT
1.12.1 Site Specific PPE Program
1.12.2 Levels of Protection
1.12.2.1 Initial PPE Components
1.12.3 PPE for Government Personnel
1.13 MEDICAL SURVEILLANCE PROGRAM
1.14 EXPOSURE MONITORING/AIR SAMPLING PROGRAM
1.15 HEAT STRESS MANAGEMENT
1.15.1 Physiological Monitoring
1.15.2 ACGIH General Controls for Heat Stress
1.15.3 ACGIH Job Specific Controls for Heat Stress
1.16 SPILL AND DISCHARGE CONTROL
1.17 MATERIALS TRANSFER SAFETY
1.18 CONFINED SPACE ENTRY PROCEDURES
1.19 HOT WORK
1.20 FIRE PROTECTION AND PREVENTION
1.21 ELECTRICAL SAFETY
1.22 EXCAVATION AND TRENCH SAFETY
1.23 GUARDING OF MACHINERY AND EQUIPMENT
1.24 LOCKOUT/TAGOUT
1.25 FALL PROTECTION
1.26 HAZARD COMMUNICATION
1.27 ILLUMINATION
1.28 SANITATION
1.29 ENGINEERING CONTROLS
1.30 SIGNS AND LABELS
1.31 WASTE DISPOSAL
1.32 TANK PURGING FOR PERMIT-REQUIRED CONFINED SPACE ENTRIES

1.33 TANK INERTING (NO ENTRY)
1.34 TANK ATMOSPHERE TESTING
1.34.1 Monitoring to Ensure Purging
1.34.2 Monitoring to Ensure Inerting
1.35 TANK LIFTING
1.36 TANK DEMOLITION
1.37 TANK CLEANING
1.38 SITE CONTROL MEASURES
1.38.1 Work Zones
1.38.2 Site Control Log
1.38.3 Communication
1.38.4 Site Security
1.39 PERSONAL HYGIENE AND DECONTAMINATION
1.39.1 Decontamination Facilities
1.39.2 Equipment Decontamination
1.39.2.1 Decontamination Facilities
1.39.2.2 Procedures
1.40 EMERGENCY EQUIPMENT AND FIRST AID REQUIREMENTS
1.41 EMERGENCY RESPONSE AND CONTINGENCY PROCEDURES
1.42 CERTIFICATE OF WORKER/VISITOR ACKNOWLEDGEMENT
1.43 INSPECTIONS
1.44 SAFETY AND HEALTH PHASE-OUT REPORT

PART 2 PRODUCTS (Not Applicable)

PART 3 EXECUTION (Not Applicable)

-- End of Section Table of Contents --

SECTION 01351A

SAFETY, HEALTH, AND EMERGENCY RESPONSE (HTRW/UST)
01/01

PART 1 GENERAL

Soil in the project area may be contaminated with petroleum products (see also Section 02316a EXCAVATION, TRENCHING, AND BACKFILLING FOR UTILITIES SYSTEMS, and Section 01450 CHEMICAL DATA QUALITY CONTROL). Health and safety requirements in this specification section apply only to workers performing tasks involving excavation, removal of underground storage tanks (USTs) and any other tasks where contact with contaminated soil is likely.

1.1 REFERENCES

The publications listed below form a part of this specification to the extent referenced. The publications are referred to in the text by basic designation only.

AMERICAN CONFERENCE OF GOVERNMENTAL INDUSTRIAL HYGIENISTS (ACGIH)

ACGIH Limit Values	(most recent issue) Threshold Limit Values for Chemical Substances and Physical Agents Biological Exposure Indices

AMERICAN PETROLEUM INSTITUTE (API)

API Pub 2219	(1999) Safe Operation of Vacuum Trucks in Petroleum Service, 2nd Edition
API RP 1604	(1996) Closure of Underground Petroleum Storage Tanks
API Std 2015	(1994) Safe Entry and Cleaning of Petroleum Storage Tanks

AMERICAN NATIONAL STANDARDS INSTITUTE (ANSI)

ANSI Z358.1	(1998) Emergency Eyewash and Shower Equipment

U.S. NATIONAL ARCHIVES AND RECORDS ADMINISTRATION (NARA)

29 CFR 1904	Recording and Reporting Occupational Injuries and Illnesses
29 CFR 1910	Occupational Safety and Health Standards
29 CFR 1926	Safety and Health Regulations for Construction
49 CFR 171	General Information, Regulations, and Definitions
49 CFR 172	Hazardous Materials Table, Special Provisions, Hazardous Materials Communications, Emergency Response Information, and Training Requirements

U.S. ARMY CORPS OF ENGINEERS (USACE)

EM 385-1-1	(1996) U.S. Army Corps of Engineers Safety and Health Requirements Manual
ER 385-1-92	(2000) Safety and Occupational Requirements for Hazardous, Toxic, and Radioactive Waste (HTRW) Activities

NATIONAL INSTITUTE FOR OCCUPATIONAL SAFETY AND HEALTH (NIOSH)

NIOSH Pub No. 85-115	(1985) Occupational Safety and Health Guidance Manual for Hazardous Waste Site Activities

1.2 DESCRIPTION OF WORK

This section requires contractors to implement practices and procedures for working safely and in compliance with OSHA and USACE regulation while performing cleanup activities on uncontrolled hazardous waste sites.

1.3 SUBMITTALS

Government approval is required for submittals with a "G" designation; submittals not having a "G" designation are for information only. When used, a designation following the "G" designation identifies the office that will review the submittal for the Government. The following shall be submitted in accordance with Section 01330 SUBMITTAL PROCEDURES:

SD-03 Product Data

Exposure Monitoring/Air Sampling Program; G-RE

Personnel exposure monitoring/sampling results.

Site Control Log; G-RE
Record of each entry and exit into the site, as specified.

HAZWOPER Qualifications Certificates; G-RE

A certificate for each worker performing cleanup operations with potential for unacceptable occupational exposure signed by the safety and health manager and the occupational physician indicating the workers meet the training and medical surveillance requirements of this contract.

1.4 REGULATORY REQUIREMENTS

Work performed under this contract shall comply with EM 385-1-1, OSHA requirements in 29 CFR 1910 and 29 CFR 1926, especially OSHA's Hazardous Waste Operations and Emergency Response Standard 29 CFR 1926.65/29 CFR 1910.120 and state specific OSHA requirements where applicable. Matters of interpretation of standards shall be submitted to the appropriate administrative agency for resolution before starting work. Where the requirements of this specification, applicable laws, criteria, ordinances, regulations, and referenced documents vary, the most stringent requirements shall apply.

1.5 PRECONSTRUCTION SAFETY CONFERENCE

A preconstruction conference shall be scheduled prior to the beginning of site work at which time representatives of the Contracting Officer will review and discuss requirements relative to planning and administration of the overall safety program.

1.6 SAFETY AND HEALTH PROGRAM

The Contractor shall develop and implement a Safety and Health Program (SHP) which incorporates requirements in OSHA standards 29 CFR 1910, Section .120 (b) and 29 CFR 1926, Section .65 (b) and section 01.A.07 of EM 385-1-1. The Safety and Health Program shall address the items in paragraph (b) of 29 CFR 1910.120/29 CFR 1926.65 and Appendix A of EM 385-1-1 in corporate specific detail. These items are: Signature Sheet; Background Information; Statement of Safety and Health Policy; Responsibilities and Lines of Authority; Subcontractors and Suppliers; Training; Safety and Health Inspections; Safety and Health Expectations, Incentives programs and Compliance; Accident Reporting; Medical Surveillance/Medical Support; Personal Protective Equipment; Standard Operating Procedures and Corporate Plans supporting occupational safety and health.

1.7 SITE SAFETY AND HEALTH PLAN

The Contractor shall develop and implement a Site Safety and Health Plan (SSHP) meeting the requirments of section 01.A.10 of EM 385-1-1 and 29 CFR 1910.120/29 CFR 1926.65 (b)(4). At a minimum, the SSHP shall address each element in Appendix C of ER 385-1-92 and shall incorporate an Activity Hazard Analysis meeting the requirments of 01.A.10 and Figure 1-1 of EM 385-1-1.

a. The SSHP shall be considered a living document and shall be updated as occupational safety and health conditions change during project execution and improved as occuptional safety and health lessons are learned during the course of the poject.

b. SSHP elements in Appendix C of ER 385-1-92 are:
1. Site Description and Contamination Characterization;
2. Activity Hazard Analysis;
3. Health and Safety Staff Organization, Qualifications and Responsibilities for the project;
4. Health and Safety Training requirements for the project;
5. Personal Protective Equipment;
6. Medical Surveillance requirments for the poject;
7. Radiation Dosimetry, if applicable;
8. Exposure Monitoring/Air Sampling;
9. Heat Stress/Cold Stress Prevention;
10. Applicable elements of the Safety and Health Program edited to meet site specific conditions and site specific standard operating safety procedures, engineering controls and work practices used to reduce exposure to contaminants and prevent accidents;
11. Site Control Measures;
12. Personal Hygiene and Decontamination;
13. Equipment Decontamination;
14. Emergency Equipment and First Aid Requirements;
15. Emergency Response and Contingency Procedures.
16. Accident Prevention;
17. Logs, Reports and Recordkeeping.

1.7.1 Acceptance and Modifications

Prior to submittal, the SSHP shall be signed and dated by the Safety and Health Manager and the Site Superintendent. The SSHP shall be submitted for review 30 days prior to the Preconstruction Safety Conference. Deficiencies in the SSHP will be discussed at the preconstruction safety conference, and the SSHP shall be revised to correct the deficiencies and resubmitted for acceptance. Onsite work shall not begin until the plan has been accepted. A copy of the written SSHP shall be maintained onsite. Changes and modifications to the accepted SSHP shall be made with the knowledge and concurrence of the Safety and Health Manager, the Site Superintendent, and the Contracting Officer. Should any

unforeseen hazard become evident during the performance of the work, the Site Safety and Health Officer (SSHO) shall bring such hazard to the attention of the Safety and Health Manager, the Site Superintendent, and the Contracting Officer, both verbally and in writing, for resolution as soon as possible. In the interim, necessary action shall be taken to re-establish and maintain safe working conditions in order to safeguard onsite personnel, visitors, the public, and the environment. Disregard for the provisions of this specification or the accepted SSHP shall be cause for stopping of work until the matter has been rectified.

1.7.2 Availability

The SSHP shall be made available in accordance with 29 CFR 1910, Section .120 (b)(1)(v) and 29 CFR 1926, Section .65 (b)(1)(v).

1.8 SITE DESCRIPTION AND CONTAMINATION CHARACTERIZATION

1.8.1 Project/Site Conditions

Soil in the areas of excavation are likely to be contaminated with petroleum products. Removed contaminated soil shall be handled as described in Section 01450 CHEMICAL DATA QUALITY CONTROL.

1.9 SITE TASKS

Anticipated tasks and operations at the site include:

a. mobilization
b. excavation/trenching
c. sampling
d. backfilling
e. decontamination
f. demobilization

The Contractor shall develop a safety and health hazard/risk analysis for each site task to be performed. Address the potential hazards associated with each task, including safety hazards, chemical hazards, physical agents, and biological hazards. For chemical hazards, develop appropriate action levels and discuss the required actions associated with the action levels. It is the Contractor's responsibility to reevaluate occupational safety and health hazards as the work progresses and to adjust the PPE and onsite operations, if necessary, so that the work is performed safely.

1.10 STAFF ORGANZATION, QUALIFICATION AND RESPONSIBILITIES

1.10.1 Safety and Health Manager

Safety and Health Manager shall be an Industrial Hygienist certified by the American Board of Industrial Hygiene or a safety professional certified by the Board of Certified Safety Professionals.

1). The Safety and Health Manager shall have the following additional qualifications:

a. A minimum of 2 years experience in developing and implementing safety and health programs at hazardous waste sites, petroleum contamination sites, or at underground storage tank removal projects.

b. Documented experience in supervising professional and technician level personnel.

c. Documented experience in developing worker exposure assessment programs and air monitoring programs and techniques.

d. Documented experience in the development of personal protective equipment programs, including programs for working in and around potentially toxic, flammable and combustible atmospheres and confined spaces.

e. Working knowledge of state and Federal occupational safety and health regulations.

2). The Safety and Health Manager shall:

a. Be responsible for the development, implementation, oversight, and enforcement of the SSHP.

b. Sign and date the SSHP prior to submittal.

c. Visit the site as needed for the duration of activities, to audit the effectiveness of the SSHP.

d. Be available for emergencies.

e. Provide onsite consultation as needed to ensure the SSHP is fully implemented.

f. Coordinate any modifications to the SSHP with the Site Superintendent, the SSHO, and the Contracting Officer.

g. Provide continued support for upgrading/downgrading of the level of personal protection.

h. Be responsible for evaluating air monitoring data and recommending changes to engineering controls, work practices, and PPE.

i. Review accident reports and results of daily inspections.

j. Serve as a member of the Contractor's quality control staff.

1.10.2 Site Safety and Health Officer

An individual and one alternate shall be designated the Site Safety and Health Officer (SSHO). The name, qualifications (education and training summary and documentation), and work experience of the Site Safety and Health Officer and alternate shall be included in the SSHP.

1). The SSHO shall have the following qualifications:

a. A minimum of 2 years experience in implementing safety and health programs at hazardous waste sites, at petroleum contamination sites, or at underground storage tank removal projects where Level C personal protective equipment was required.

b. Documented experience in construction techniques and construction safety procedures.

c. Working knowledge of Federal and state occupational safety and health regulations.

d. Specific training in personal and respiratory protective equipment program implementation, confined space program oversight, and in the proper use of air monitoring instruments, and air sampling methods.

2). The Site Safety and Health Officer shall:

a. Assist and represent the Safety and Health Manager in onsite training and the day to day onsite implementation and enforcement of the accepted SSHP.

b. Be assigned to the site on a full time basis for the duration of field activities involving potential exposure to contaminated soil. If operations are performed during more than 1 work shift per day, a site Safety and Health Officer shall be present for each shift.

c. Have authority to ensure site compliance with specified safety and health requirements, Federal, state and OSHA regulations and all aspects of the SSHP including, but not limited to, activity hazard analyses, air monitoring, monitoring for ionizing radiation, use of PPE, decontamination, site control, standard operating procedures used to minimize hazards, safe use of engineering controls, the emergency response plan, confined space entry procedures, spill containment program, and preparation of records by performing a daily safety and health inspection and documenting results on the Daily Safety Inspection Log in accordance with 29 CFR 1904.

d. Have authority to stop work if unacceptable health or safety conditions exist, and take necessary action to re-establish and maintain safe working conditions.

e. Consult with and coordinate any modifications to the SSHP with the Safety and Health Manager, the Site Superintendent, and the Contracting Officer.

f. Serve as a member of the Contractor's quality control staff on matters relating to safety and health.

g. Conduct accident investigations and prepare accident reports.

h. Review results of daily quality control inspections and document safety and health findings into the Daily Safety Inspection Log.

i. In coordination with site management and the Safety and Health Manager, recommend corrective actions for identified deficiencies and oversee the corrective actions.

1.10.3 Persons Certified in First Aid and CPR

At least two persons who are currently certified in first aid and CPR by the American Red Cross or other approved agency shall be onsite at all times during site operations. They shall be trained in universal precautions and the use of PPE as described in the Bloodborne Pathogens Standard of 29 CFR 1910, Section .1030. These persons may perform other duties but shall be immediately available to render first aid when needed.

1.11 TRAINING

The Contractor's training program for workers performing cleanup operations and who will be exposed to contaminants shall meet the following requirements.

1.11.1 General Hazardous Waste Operations Training

All Personnel performing duties with potential for exposure to on-site contaminants shall meet and maintain the following 29 CFR 1910.120/29 CFR 1926.65 (e) training requirements:

a. 40 hours of off site hazardous waste instruction.

b. 3 days actual field experience under the direct supervision of a trained, experienced supervisor.

c. 8 hours refresher training annually.

Onsite supervisors shall have an additional 8 hours management and supervisor

training specified in 29 CFR 1910.120/29 CFR 1926.65 (e) (4).

1.11.2 Initial Session (Pre-entry Briefing)

Prior to commencement of onsite field activities, all site employees, including those assigned only to the Support Zone, shall attend a site-specific safety and health training session. This session shall be conducted to ensure that all personnel are familiar with requirements and responsibilities for maintaining a safe and healthful work environment. Procedures and contents of the accepted SSHP and Sections 01.B.02 and 28.D.03 of EM 385-1-1 shall be thoroughly discussed. The Contracting Officer shall be notified at least 5 days prior to the initial site-specific training session so government personnel involved in the project may attend.

1.11.3 Periodic Sessions

Periodic onsite training shall be conducted by the SSHO at least weekly for personnel assigned to work at the site during the following week, and whenever site conditions, work procedures, or site personnel change. The training shall address safety and health procedures, work practices, any changes in the SSHP, activity hazard analyses, work tasks, or schedule; results of previous week's air monitoring, review of safety discrepancies and accidents. Should an operational change affecting onsite field work be made, a meeting prior to implementation of the change shall be convened to explain safety and health procedures. Site-specific training sessions for new personnel, visitors, and suppliers shall be conducted by the SSHO using the training curriculum outlines developed by the Safety and Health Manager.

1.12 PERSONAL PROTECTIVE EQUIPMENT

1.12.1 Site Specific PPE Program

Onsite personnel exposed to contaminants shall be provided with appropriate personal protective equipment. Components of levels of protection (B, C, D and modifications) must be relevant to site-specific conditions, including heat and cold stress potential and safety hazards. Only respirators approved by NIOSH shall be used. Protective equipment and clothing shall be kept clean and well maintained. The PPE section of the SSHP shall include site-specific procedures to determine PPE program effectiveness and for onsite fit-testing of respirators, cleaning, maintenance, inspection, and storage of PPE.

1.12.2 Levels of Protection

The Safety and Health Manager shall establish and evaluate as the work progresses the levels of protection for each work activity. The Safety and Health Manager shall also establish action levels for upgrade or downgrade in levels of PPE. Protocols and the communication network for changing the level of protection shall be described in the SSHP. The PPE evaluation protocol shall address air monitoring results, potential for exposure, changes in site conditions, work phases, job tasks, weather, temperature extremes, individual medical considerations, etc.

1.12.2.1 Initial PPE Components

The following items constitute minimum protective clothing and equipment ensembles to be utilized during this project:

Level D.

- Appropriate work clothing
- Steel-toed work boots
- Hearing protection (if necessary)
- Hard hat

Gloves appropriate to protect against task-specific hazards

Modified Level D.

Appropriate work clothing
Steel-toed work boots
Hearing protection (if necessary)
Hard hat
Gloves appropriate to protect against task-specific chemical and physical hazards
Regular or coated disposable coveralls with hoods and elastic wrists and ankles

Level C.

Air purifying respirator with organic vapor or OV/combination cartridges
Hard hat
Regular or coated disposable coveralls with hoods and elastic wrists and ankles
Gloves appropriate to protect against task-specific chemical and physical hazards
Steel-toed work boots with disposable boot covers
Hearing protection (if necessary)

1.12.3 PPE for Government Personnel

Three clean sets of personal protective equipment and clothing (excluding air-purifying negative-pressure respirators and safety shoes, which will be provided by individual visitors), as required for entry into the Exclusion Zone and/or Contamination Reduction Zone, shall be available for use by the Contracting Officer or official visitors. The items shall be cleaned and maintained by the Contractor and stored in a clean area and clearly marked: "FOR USE BY GOVERNMENT ONLY." The Contractor shall provide basic training in the use and limitations of the PPE provided.

1.13 MEDICAL SURVEILLANCE PROGRAM

The Contractor's medical surveillance program for workers performing cleanup operations and who will be exposed to contaminants shall meet 29 CFR 1910.120/1926.65 (f) and the following requirements. The Contractor shall assure the Occupational Physician or the physician's designee performs the physical examinations and reviews examination results. Participation in the medical surveillance program shall be without cost to the employee, without loss of pay and at a reasonable time and place.

1.14 EXPOSURE MONITORING/AIR SAMPLING PROGRAM

The Safety and Health Manager shall prepare and implement an exposure monitoring/air sampling program to identify and quantify safety and health hazards and airborne levels of hazardous substances in order to assure proper selection of engineering controls, work practices and personal protective equipment for affected site personnel.

1.15 HEAT STRESS MANAGEMENT

The Contractor shall establish a heat stress management program and implement it when the ambient temperature exceeds 70 Degrees F. The heat stress management program shall consist of the following procedures and practices.

1.15.1 Physiological Monitoring

The Contractor shall train or otherwise assure workers heart rates and body core

temperatures are monitored and assure that threshold levels in Table 4 of ACGIH Limit Values are not exceeded.

1.15.2 ACGIH General Controls for Heat Stress

The Contractor shall implement general heat stress control procedures in Table 5 of ACGIH Limit Values as part of his heat stress management program.

1.15.3 ACGIH Job Specific Controls for Heat Stress

The Contractor shall implement job specific heat stress controls in Table 5 of ACGIH Limit Values when site specific conditions warrant.

1.16 SPILL AND DISCHARGE CONTROL

Written spill and discharge containment/control procedures shall be developed and implemented. These procedures shall address material handling equipment, and appropriate procedures for sampling, shipping and transport. These procedures shall describe prevention measures, such as building berms or dikes; spill control measures and material to be used (e.g. booms, vermiculite); location of the spill control material; personal protective equipment required to cleanup spills; disposal of contaminated material; and who is responsible to report the spill. Storage of contaminated material or hazardous materials shall be appropriately bermed, diked and/or contained to prevent any spillage of material on uncontaminated soil. If the spill or discharge is reportable, and/or human health or the environment are threatened, the National Response Center, the state, and the Contracting Officer shall be notified as soon as possible.

1.17 MATERIALS TRANSFER SAFETY

Liquids and residues shall be removed from the tanks using explosion-proof or air-driven pumps. Pump motors and suction hoses shall be bonded to the tank and grounded to prevent electrostatic ignition hazards. Use of a hand pump will be permitted to remove the last of the liquid from the bottom of the tanks. If a vacuum truck is used for removal of liquids or residues, the area of operation for the vacuum truck shall be vapor free. The truck shall be located upwind from the tank and outside the path of probable vapor travel. The vacuum pump exhaust gases shall be discharged through a hose of adequate size and length downwind of the truck and tank area. Vacuum truck operating and safety practices shall conform to API Pub 2219. Tank residues shall be collected in drums, tanks, or tank trucks labeled according to 49 CFR 171 and 49 CFR 172 and disposed of as specified. After the materials have been transferred and the tanks have been exposed, fittings and lines leading to the tanks shall be disconnected and drained of their contents. The contents of the lines shall not spill to the environment during cutting or disconnecting of tank fittings. Materials drained shall be transferred into DOT-approved drums for storage and/or transportation. Only non-sparking or non-heat producing tools shall be used to disconnect and drain or to cut through tank fittings. Electrical equipment (e.g., pumps, portable hand tools, etc.) used for tank preparation shall be explosion-proof. Following cutting or disconnecting of the fittings, openings leading to the tanks shall be plugged.

1.18 CONFINED SPACE ENTRY PROCEDURES

If appropriate, comply with the provisions of 29 CFR 1910.146.

1.19 HOT WORK

Hot work will not be permitted on or within the tanks except as outlined herein. Prior to conducting hot work, a hot work permit shall be prepared and submitted. An example format for a hot work permit shall be included in the SSHP. The permit shall describe compliance with the following procedures.

After tank interiors have been decontaminated, hot work may be conducted only when the tank is inerted, and to the extent necessary to begin dismantling the tanks. After decontamination of tank interiors, hot work shall not be performed unless monitoring indicates atmospheres within and immediately surrounding the tanks are less than 8% oxygen inside the tank and less than 10% of the LFL outside the tank; continuous monitoring shall continue until the hot work is completed. The hot work prohibition includes welding, cutting, grinding, sawing, or other similar operations which could be expected to potentially generate combustion-producing temperatures or sparks, or which could produce potentially hazardous fumes or vapors. An individual at each hot work site shall be designated as a fire watch. This person's sole responsibility shall be to monitor the hot work and have immediate access to the fire extinguisher located at each hot work site. A new permit shall be obtained at the start of each work shift during which hot work will be conducted.

1.20 FIRE PROTECTION AND PREVENTION

Comply with all applicable provisions of 29 CFR 1926 Subpart F.

1.21 ELECTRICAL SAFETY

If temporary electrical power is used for this project, it shall conform to the National Electrical Code, the National Electrical Safety Code, and EM 385-1-1. Motorized vehicles to be used on this project shall conform to EM 385-1-1. Air monitoring and sampling equipment shall be rated intrinsically safe. All portable electrical equipment shall be protected by Ground Fault Circuit Interrupters (GFCI). Clearances to adjacent overhead transmission and distribution electrical lines shall be sufficient for the movement of vehicles and operation of construction equipment.

1.22 EXCAVATION AND TRENCH SAFETY

The Contractor shall comply with the requirements of 29 CFR 1926.650-652 when workers are exposed to the potential of excavation cave-ins. The designated competent person shall determine the excavation to be safe prior to worker entrance.

1.23 GUARDING OF MACHINERY AND EQUIPMENT

Where applicable, comply with the requirements of EM 385-1-1, Section 16.

1.24 LOCKOUT/TAGOUT

The Contractor shall comply with all applicable requirements of 29 CFR 1910.147, 29 CFR 1910.301-305, and EM 385-1-1, Section 12, at a minimum.

1.25 FALL PROTECTION

The Contractor shall comply with all applicable requirements of 29 CFR 1926.500-503.

1.26 HAZARD COMMUNICATION

A hazard communication program shall be established and implemented in accordance with 29 CFR 1926.59. This shall include the development of a written Hazard Communication Plan which shall be included as part of the SSHP and kept on site, as required by 29 CFR 1926.59(e)(1).

1.27 ILLUMINATION

The Contractor shall comply with the requirements of 29 CFR 1926.26.

1.28 SANITATION

a. Washing Facilities. The Contractor shall provide washing facilities in the support zone consisting of water, towels, and soap for men and women as necessary (see also paragraph: PERSONAL HYGIENE AND DECONTAMINATION of this section).

b. The Contractor shall provide potable water in the support zone work areas and shall:
Clearly mark containers of potable water;
Ensure potable water containers are not used for any other purposes;
Mark nonpotable water outlets as unsafe for drinking;
Keep drinking cups in sanitary receptacles;
Provide receptacles if disposable cups are provided; and
Ensure there are no cross-connections between potable and nonpotable supplies.

1.29 ENGINEERING CONTROLS

The Contractor shall implement feasible engineering and work practice controls to reduce and maintain employee exposure at or below the OSHA PELs and ACGIH TLVs (the more restrictive shall apply) for hazardous substances that may be encountered.

1.30 SIGNS AND LABELS

Before site operations begin, mark the perimeter with warning tape or other visual means. Post warning signs around the perimeter and at the entrance road or path and also post signs directing visitors to the authorized entrance.

1.31 WASTE DISPOSAL

Waste shall be handled, transported, and disposed in accordance with all Federal, state, and local regulations. Provide detailed information regarding waste disposal procedures in the SSHP.

1.32 TANK PURGING FOR PERMIT-REQUIRED CONFINED SPACE ENTRIES

Tanks shall be purged for confined space entry. The flammable vapors shall be reduced to less than 10% of the LFL and the oxygen content shall be between 19.5% and 23.5%. Confined space entry into the tanks shall not be attempted unless absolutely necessary, as for example, to remove sludge from the tank. Flammable vapors may be exhausted from the tank by any of the methods from API RP 1604 listed below, or any method approved by the Contracting Officer. The SSHP shall specify the purging method to be used.

a. Ventilation by Eductor-Type Air Movers: The eductor-type air mover shall be properly bonded and grounded to prevent the generation and discharge of static electricity. When using this method, the fill (drop) tube shall remain in place to ensure ventilation at the bottom of the tank. Tanks equipped with fill (drop) tubes that are not removable shall be purged by this method. An eductor extension shall be used to discharge vapors a minimum of 12 feet above grade or 3 feet above adjacent roof lines, whichever is greater. If this is not possible, alternative methods shall be proposed and approved prior to purging. Noise levels generated by these devices as a result of high airflow may exceed OSHA PELs. Noise levels shall be evaluated and appropriate hearing protection shall be provided.

b. Ventilation by Diffused Air Blowers: When using this purging method, the air-diffusing pipe is properly bonded and grounded to prevent the discharge of a spark. Fill (drop) tubes shall be removed to allow proper diffusion of the air in the tank. Air supply shall be from a compressor that has been checked to ensure that Grade D breathing air is being supplied. Air pressure in the tank

shall not exceed 5 psi gauge to avoid tank failure.

c. Commercial Emulsifiers and Volatile Fuel Encapsulators: These products are completely miscible in water, aid in the elimination of flammable vapors, and are biodegradable. Regulatory requirements for treatment and disposal of the water shall be determined prior to using this method. Standing outside the tank, the operator shall rinse the tank with a 3-to-6 percent solution of the product using a pressure sprayer through a tank opening. Explosive concentrations shall be measured at several levels (top, middle, and bottom) within the tank. If readings are greater than 10% of the LFL, the tank shall be rinsed again. When LFL readings are acceptable, the water in the tank shall be pumped out for disposal.

1.33 TANK INERTING (NO ENTRY)

Following the removal of tank contents but prior to excavation of the tanks and tank preparation activities, the tanks shall be inerted only by introducing an inert gas, carbon dioxide (CO_2) or liquid nitrogen (N_2), to remove flammable vapors. Before inerting, all openings in the tanks shall be plugged with threaded or expansion type plugs except the vent tube and the opening to be used for introducing the inert gas. Within 30 minutes prior to initiating any activities (e.g., excavating, preparation, removal, opening, demolition, transportation, or other similar activities) involving a tank which has been inerted, the inerted nature of the tank (oxygen levels less than 8%) shall be verified.

a. CO_2 fire extinguishers shall not be used for inerting the tank interiors. If a compressed gas (e.g., CO_2 or N_2) is introduced into the tank the following requirements shall be met to prevent the buildup of static electricity:

(1) The UST and the compressed gas supply tank shall be bonded together and grounded.

(2) The compressed gas shall be supplied only at low flows.

(3) The liquid or gas shall be released at the tank bottom so that static electricity is not generated by liquid falling to the bottom of the tank. The tank shall be slowly filled from the bottom up.

b. Dry ice, which evolves CO_2 gas as it evaporates, if used, shall be introduced in the amount of at least 3 lbs per 100 gallons of tank capacity. Skin contact with dry ice shall be prevented by wearing heavy cloth gloves.

c. Sufficient quantities of inert gas (CO_2 or N_2) shall be introduced into the tanks to lower the oxygen content to less than 8%. Pressure inside the tank shall not exceed 5 psi. Prior to proceeding with additional activities on the tank (e.g., excavating), the oxygen content of the tanks shall be monitored to confirm that it is less than 8%. Additional oxygen level monitoring shall be conducted at least hourly while activities involving the tanks are underway but prior to decontamination of tank interiors; at least daily during periods in which the tanks are not being disturbed but prior to decontamination of their interiors; or as directed by the Contracting Officer. If monitoring of tank interiors indicates that oxygen levels are not remaining below 8%, additional inert gas shall be introduced and more frequent oxygen monitoring shall be initiated.

d. During inerting procedures, an extension vent tube a minimum of 12 feet above grade or 3 feet above any adjacent (within 75 feet) roof lines, whichever is greater shall be used to discharge tank vapors. If this is not possible, alternative methods shall be proposed and approved prior to inerting. Continuous combustible gas/oxygen monitoring shall be conducted at the vent and inert gas introduction holes.

1.34 TANK ATMOSPHERE TESTING

The air within the storage tanks shall be monitored to ensure the space is either adequately purged and safe for personnel entry, or to ensure the tank has been adequately inerted and the oxygen content is less than 8%. In both instances, monitoring shall be performed at the top, bottom, and middle areas of the tanks to ensure stratification has not occurred. Monitoring results shall be reported to project personnel to ensure safe operations. Data shall be recorded as specified in paragraph EXPOSURE MONITORING/AIR SAMPLING PROGRAM.

1.34.1 Monitoring to Ensure Purging

When monitoring to ensure purging, both oxygen content and LFL readings are required. Prior to obtaining LFL readings, the Contractor shall monitor the oxygen content of the space and verify that the combustible gas indicators are operating within the oxygen limits identified by the CGI manufacturer. Personnel shall not be permitted to enter spaces with oxygen levels less than 19.5%, except in emergencies, and then only when equipped with the proper PPE and when following permit-required confined space entry procedures. Toxic air contaminants shall be monitored as specified in paragraph EXPOSURE MONITORING/AIR SAMPLING PROGRAM.

1.34.2 Monitoring to Ensure Inerting

Inerted tanks shall be monitored to ensure oxygen readings remain below a maximum allowable percentage of 8% by volume.

1.35 TANK LIFTING

Tanks shall be lifted using equipment with a rated capacity greater than the load to be lifted. Tanks shall be lifted by lifting eyes or by straps under the ends of the tanks. Tanks shall not be lifted by the manhole flange or by removing the bungs. Personnel shall be directed to remain away from the ends of the tanks and tanks shall be positioned, whenever possible, with the ends oriented away from occupied or traveled areas, due to potential for rupture. During transportation, the tanks shall be secured to prevent movement.

1.36 TANK DEMOLITION

The tanks excavated as part of this project shall be demolished before being removed from the site unless they are transported directly to a state certified tank destruction facility. Demolition will not be permitted until a decontamination of the interiors and exteriors is complete. Demolition shall involve opening the tanks sufficiently to permanently prohibit further use as containers of liquids. Tanks shall be inerted and tested before they are opened. Plans and procedures, including a list of materials and supplies, for safely and effectively demolishing the tanks shall be submitted in the SSHP.

1.37 TANK CLEANING

Safety practices and procedures for the cleaning of the storage tanks shall conform to API Std 2015. Opening of the tanks to permit decontamination shall be conducted utilizing only methods approved in the SSHP. The interior and exterior of the tank shall be decontaminated prior to removing it from the work site unless the tank is being transported directly to a state certified tank destruction facility. Plans and procedures, including materials and supplies, for safely and effectively opening the tanks, cleaning surfaces of the interior and exterior of the tanks, and disposing of the decontamination fluids shall be submitted in the SSHP. Volatile organic solvents shall not be permitted to be utilized for decontamination procedures. Personnel shall not enter any of the storage tanks as a part of this project, except when following permit-required confined space entry procedures. Decontamination fluids shall be collected and

disposed. Upon completion of this project, written certification shall be made that the tank was properly decontaminated prior to being removed from the site.

1.38 SITE CONTROL MEASURES

1.38.1 Work Zones

Work zone boundaries (exclusion zone, including restricted and regulated areas; contamination reduction zone; and support zone) and access points shall be established and the boundary delineations shall be included on the drawings and in the SSHP. Delineation of work zone boundaries shall be based on the contamination characterization data and the hazard/risk analysis to be performed as described in paragraph: HAZARD/RISK ANALYSIS. As work progresses and field conditions are monitored, work zone boundaries may be modified with approval of the Contracting Officer. Work zones shall be clearly identified and marked in the field (using fences, tape, signs, etc.). A site map, showing work zone boundaries and locations of decontamination facilities, shall be posted in the onsite office. Work zones shall consist of the following:

a. Exclusion Zone (EZ): The exclusion zone is the area where hazardous contamination is either known or expected to occur and the greatest potential for exposure exists. Entry into this area shall be controlled and exit may only be made through the CRZ.

b. Contamination Reduction Zone (CRZ): The CRZ is the transition area between the Exclusion Zone and the Support Zone. The personnel and equipment decontamination areas shall be separate and unique areas located in the CRZ.

c. Support Zone (SZ): The Support Zone is defined as areas of the site, other than exclusion zones and contamination reduction zones, where workers do not have the potential to be exposed to hazardous substances or dangerous conditions resulting from hazardous waste operations. The Support Zone shall be secured against active or passive contamination. Site offices, parking areas, and other support facilities shall be located in the Support Zone.

1.38.2 Site Control Log

A log of personnel visiting, entering, or working on the site shall be maintained. The log shall include the following: date, name, agency or company, time entering and exiting site, time entering and exiting the exclusion zone (if applicable), and personal protective equipment utilized. Before visitors are allowed to enter the Contamination Reduction Zone or Exclusion Zone, they shall show proof of current training, medical surveillance and respirator fit testing (if respirators are required for the tasks to be performed) and shall fill out the Certificate of Worker or Visitor Acknowledgment. This visitor information, including date, shall be recorded in the log.

1.38.3 Communication

An employee alarm system that has adequate means of on and off site communication shall be provided and installed in accordance with 29 CFR 1910 Section .165. The means of communication shall be able to be perceived above ambient noise or light levels by employees in the affected portions of the workplace. The signals shall be distinctive and recognizable as messages to evacuate or to perform critical operations.

1.38.4 Site Security

Signs shall be printed in bold large letters on contrasting backgrounds in English and/or where appropriate, in the predominant language of workers unable to read English. Signs shall be visible from all points where entry might occur and at such distances from the restricted area that employees may read the signs and take necessary protective steps before entering. Ensure employees use

designated access points for movement of personnel and equipment between zones and on and off site. Restrict site access to Government authorized or Contractor certified personnel.

1.39 PERSONAL HYGIENE AND DECONTAMINATION

Personnel entering the Exclusion or Contamination Reduction Zones or otherwise exposed or subject to exposure to hazardous chemical vapors, liquids, or contaminated solids shall adhere to the following personal hygiene and decontamination provisions. Decontamination shall be performed in the CRZ prior to entering the Support Zone from the Exclusion Zone. Chapter 10.0 of NIOSH Pub No. 85-115 shall be consulted when preparing decontamination procedures. A detailed discussion of personal hygiene and decontamination facilities and procedures to be followed by site workers shall be submitted as part of the SSHP. Employees shall be trained in the procedures and the procedures shall be enforced throughout site operations. Persons disregarding these provisions of the SSHP shall be barred from the site.

1.39.1 Decontamination Facilities

The Contractor shall initially set up a decontamination line in the CRZ. Employees shall exit the exclusion zone through the CRZ and shall implement decontamination procedures and techniques as outlined in the SSHP. It is the site safety and health officer's responsibility to recommend techniqes to improve personnel decontamination techniques and procedures, if necessary.

1.39.2 Equipment Decontamination

Vehicles and equipment used in the EZ shall be decontaminated in the CRZ prior to leaving the site.

1.39.2.1 Decontamination Facilities

A vehicle/equipment decontamination station shall be provided within the CRZ for decontaminating vehicles and equipment leaving the EZ. The decontamination station components shall be proposed in the Contractor's SSHP. Include information concerning the surface to be used to protect the ground from contamination, any collection system for decontamination water, and methods to be used to decontaminate the equipment. A designated "clean area" shall also be identified in the CRZ for performing equipment maintenance. This area shall be used when personnel are required by normal practices to come in contact with the ground, i.e., crawling under a vehicle to change engine oil. Equipment within the EZ or CRZ shall be decontaminated before maintenance is performed.

1.39.2.2 Procedures

Procedures for equipment decontamination shall be developed and utilized to prevent the spread of contamination into the SZ and offsite areas. These procedures shall address disposal of contaminated products and spent materials used on the site, including containers, fluids, oils, etc. Any item taken into the EZ shall be assumed to be contaminated and shall be inspected and/or decontaminated before the item leaves the area. Vehicles, equipment, and materials shall be cleaned and decontaminated prior to leaving the site. Construction material shall be handled in such a way as to minimize the potential for contaminants being spread and/or carried offsite. Prior to exiting the site, vehicles and equipment shall be monitored to ensure the adequacy of decontamination.

1.40 EMERGENCY EQUIPMENT AND FIRST AID REQUIREMENTS

The following items, as a minimum, shall be maintained onsite and available for immediate use:

a. First aid equipment and supplies approved by the consulting physician.

b. Emergency eyewashes and showers which comply with ANSI Z358.1.

c. Emergency-use respirators.

d. Fire extinguishers with a minimum rating of 20-A:120-B:C shall be provided at site facilities and in all vehicles and at any other site locations where flammable or combustible materials present a fire risk.

1.41 EMERGENCY RESPONSE AND CONTINGENCY PROCEDURES

An Emergency Response Plan, that meets the requirements of 29 CFR 1910Section .120 (l) and 29 CFR 1926 Section .65 (l), shall be developed and implemented as a section of the SSHP. In the event of any emergency associated with remedial action, the Contractor shall, without delay, alert all onsite employees that there is an emergency situation; take action to remove or otherwise minimize the cause of the emergency; alert the Contracting Officer; and institute measures necessary to prevent repetition of the conditions or actions leading to, or resulting in, the emergency. Employees that are required to respond to hazardous emergency situations shall be trained in how to respond to such expected emergencies. The plan shall be reviewed periodically and revised as necessary to reflect new or changing site conditions or information. Copies of the accepted SSHP and revisions shall be provided to the affected local emergency response agencies. The following elements, as a minimum, shall be addressed in the plan:

a. Pre-emergency planning. Contact the local emergency response planner during preparation of the Emergency Response Plan. The contractor shall arrange to have fire, rescue, medical and police security services provided by local emergency responders. The Contractor shall ensure the Emergency Response Plan for the site is compatible and integrated with the local fire, rescue, medical and police security services available from local emergency response planning agencies.

b. Personnel roles, lines of authority, communications for emergencies.

c. Emergency recognition and prevention.

d. Site topography, layout, and prevailing weather conditions.

e. Criteria and procedures for site evacuation (emergency alerting procedures, employee alarm system, emergency PPE and equipment, safe distances, places of refuge, evacuation routes, site security and control).

f. Specific procedures for decontamination and medical treatment of injured personnel.

g. Route maps to nearest prenotified medical facility. Site-support vehicles shall be equipped with maps. At the beginning of project operations, drivers of the support vehicles shall become familiar with the emergency route and the travel time required.

h. Emergency alerting and response procedures including posted instructions and a list of names and telephone numbers of emergency contacts (physician, nearby medical facility, fire and police departments, ambulance service, Federal, state, and local environmental agencies; as well as Safety and Health Manager, the Site Superintendent, the Contracting Officer and/or their alternates).

i. Criteria for initiating community alert program, contacts, and responsibilities.

j. Procedures for reporting incidents to appropriate government agencies. In the event that an incident such as an explosion or fire, or a spill or release of toxic materials occurs during the course of the project, the appropriate government agencies shall be immediately notified. In addition, the Contracting Officer shall be verbally notified immediately and receive a written notification within 24 hours. The report shall include the following items:

(1) Name, organization, telephone number, and location of the Contractor.

(2) Name and title of the person(s) reporting.

(3) Date and time of the incident.

(4) Location of the incident, i.e., site location, facility name.

(5) Brief summary of the incident giving pertinent details including type of operation ongoing at the time of the incident.

(6) Cause of the incident, if known.

(7) Casualties (fatalities, disabling injuries).

(8) Details of any existing chemical hazard or contamination.

(9) Estimated property damage, if applicable.

(10) Nature of damage, effect on contract schedule.

(11) Action taken to ensure safety and security.

(12) Other damage or injuries sustained, public or private.

k. Procedures for critique of emergency responses and follow-up.

1.42 CERTIFICATE OF WORKER/VISITOR ACKNOWLEDGEMENT

A copy of a Contractor-generated certificate of worker/visitor acknowledgement shall be completed and submitted for each visitor allowed to enter contamination reduction or exclusion zones, and for each employee.

1.43 INSPECTIONS

The SSHO's Daily Inspection Logs shall be attached to and submitted with the Daily Quality Control reports. Each entry shall include the following: date, work area checked, employees present in work area, PPE and work equipment being used in each area, special safety and health issues and notes, and signature of preparer. In the event of an accident, the Contracting Officer shall be notified according to EM 385-1-1. Within 2 working days of any reportable accident, an Accident Report shall be completed on ENG Form 3394 and submitted.

1.44 SAFETY AND HEALTH PHASE-OUT REPORT

A Safety and Health Phase-Out Report shall be submitted within 10 working days following completion of the work, prior to final acceptance of the work. The following minimum information shall be included:

a. Summary of the overall performance of safety and health (accidents or incidents including near misses, unusual events, lessons learned, etc.).

b. Final decontamination documentation including procedures and

techniques used to decontaminate equipment, vehicles, and on site facilities.

c. Summary of exposure monitoring and air sampling accomplished during the project.

d. Signatures of Safety and Health Manager and SSHO.

PART 2 PRODUCTS (Not Applicable)

PART 3 EXECUTION (Not Applicable)

-- End of Section --

SECTION TABLE OF CONTENTS

DIVISION 01 - GENERAL REQUIREMENTS

SECTION 01400

SPECIAL SAFETY REQUIREMENTS

05/00 Rev 12/01

PART 1 GENERAL

1.1 REFERENCES
1.2 SUMMARY
1.2.1 General
1.2.2 Description of Work
1.3 PRECONSTRUCTION CONFERENCE
1.4 SUBMITTALS
1.5 ACCIDENT PREVENTION PLAN
1.5.1 Requirements
1.5.1.1 Responsible Individual(s)
1.5.1.2 Subcontractor Supervision
1.5.1.3 Indoctrination of New Employees
1.5.1.4 Tool Box Safety Meetings
1.5.1.5 Fire Prevention and Protection
1.5.1.6 Housekeeping
1.5.1.7 Mechanical Equipment Inspection
1.5.1.8 First Aid and Medical Facilities
1.5.1.9 Sanitation
1.5.1.10 Safety Promotions
1.5.1.11 Accident Reporting
1.5.1.12 Job Hazard Analysis
1.6 RADIOLOGICAL EQUIPMENT
1.7 AIRFIELD SAFETY PRECAUTIONS (DEC 1991)
1.7.1 Definitions
1.7.2 General
1.7.3 The Contractor shall
1.7.4 Landing Areas
1.7.5 Safety Precaution Areas
1.8 NOT USED
1.9 OTHER SPECIAL SAFETY REQUIREMENTS
1.10.1 QD Safety Requirement
1.10.2 Area Vapor Monitoring
1.10 EXCAVATION AND TRENCHING
1.11 ASBESTOS AND LEAD PAINT
1.11.1 Safety Plans
1.11.2 Safety and Health Oversight
1.11.3 Qualifications
1.11.3.1 Competent Person
1.11.3.2 Testing Laboratory
1.11.4 Exposure Assessment
1.11.4.1 Asbestos
1.11.4.2 Lead Paint
1.11.5 Employee Protection
1.11.5.1 Respiratory Protection Program
1.11.5.2 Protective Equipment
1.11.5.3 Decontamination Areas
1.11.5.4 Handwashing Facilities
1.11.5.5 Medical Surveillance
1.11.5.6 Training

1.11.6 Engineering Controls

PART 2 PRODUCTS (NOT APPLICABLE)

PART 3 EXECUTION (NOT APPLICABLE)

-- End of Section Table of Contents --

SECTION 01400

SPECIAL SAFETY REQUIREMENTS
05/00 Rev 12/01

PART 1 GENERAL

See Section 01351A SAFETY, HEALTH AND EMERGENCY RESPONSE for health and safety requirements related to contact with potentially contaminated soil. See Section 13280 for asbestos hazard abatement. See Section 13286N HANDLING OF LIGHTING BALLASTS AND LAMPS CONTAINING PCBs AND MERCURY for information concerning removal of light ballasts.

1.1 REFERENCES

The publications listed below form a part of this specification to the extent referenced. The publications are referred to in the text by basic designation only.

CODE OF FEDERAL REGULATIONS (CFR)

29 CFR 1910	Occupational Safety and Health Standards
29 CFR 1926	Safety and Health Regulations for Construction
40 CFR 763	Asbestos

ENGINEERING MANUALS (EM)

EM 385-1-1	(1996 and Changes) Safety and Health Requirements Manual

1.2 SUMMARY

1.2.1 General

This section provides guidelines for preparation of accident prevention plans, and to implement the accident prevention clause (this specification) and EM 385-1-1, Safety and Health Requirements Manual. This section also includes guidelines for demolition and renovation of structures that contain nonfriable (i.e. NESHAP Category I) asbestos or lead-based paint, and that are to be demolished or renovated with these materials in place. The U.S. Army Corps of Engineers Safety and Health Requirements Manual, EM 385-1-1 is available from U.S. Government bookstores operated by the Government Printing Office Changes to EM 385-1-1 applicable to this contract include only those revisions posted at the following website (all revisions up to the time this solicitation is issued): http://www.hq.usace.army.mil/soh/hqusace_soh.htm ("Changes to EM"). U.S. Government bookstores are located in most major cities including Milwaukee, Chicago, Kansas City, Denver, and Pueblo, Colorado.

1.2.2 Description of Work

Demolition of structures as indicated on the drawings - four buildings - Bldg 800 (Pump Shelter), Bldg 803 (Storage), Bldg 805 (Control) and Bldg 810 (Operations) - and an aboveground fuel storage tank. Sampling identified no asbestos containing material in Bldgs 805 and 810. The Contractor may be required to conduct asbestos sampling and a lead-based paint survey if

up-to-date sampling is required prior to demolition. Coatings on the current AST may also contain lead based paint. (Therefore, hot cutting will not be allowed.) PCBs or mercury may be present in light fixture ballast; mercury could be present in switches (see Section 13286N HANDLING OF LIGHTING BALLASTS AND LAMPS CONTAINING PCBs AND MERCURY) Asbestos hazard abatement is addressed in Section 13280A ASBESTOS ABATEMENT. Painting the interiors of new ASTs may require confined space entry.

1.3 PRECONSTRUCTION CONFERENCE

See Contract Clause "PRECONSTRUCTION CONFERENCE". A preconstruction conference will be scheduled prior to beginning of site work. Requirements relative to planning and administration of the overall safety program will be discussed.

1.4 SUBMITTALS

Government approval is required for submittals with a "G" designation; submittals not having a "G" designation are for information only. When used, a designation following the "G" designation identifies the office that will review the submittal for the Government. The following shall be submitted in accordance with Section 01330SUBMITTAL PROCEDURES:

SD-01 Preconstruction Submittals

Accident Prevention Plan; G-RE

The written site-specific Accident Prevention Plan including sections for lead and asbestos.

Respiratory Protection Program; G-RE.

Records of the respirator program.

SD-06 Test Reports

Exposure Assessment and Air Monitoring; G-RE.

Initial exposure assessments, negative exposure assessments, air-monitoring results and documentation.

SD-07 Certificates

Qualifications; G-RE.

A written report providing evidence of qualifications for personnel, facilities and equipment assigned to the work. Include copies of:.

a. Current AHERA Accreditation certificates, per AHERA Regulation 40 CFR 763, Appendix C to Subpart E, for each worker or supervisor; Current State and Local supervisor and worker accreditation certificates.

b. Laboratory Qualifications and Certificates

Training Program;

A copy of the written project site-specific training material as indicated in 29 CFR 1926, Section .1101 that will be used to train onsite employees. The training document shall be signed by the Contractor's Competent Person.

Medical Requirements.

Physician's written opinion.

1.5 ACCIDENT PREVENTION PLAN

The Contractor shall submit, prior to the start of on site construction activity, a proposed accident prevention plan which shall be the accident prevention policy to be followed by all of the Contractor's and subcontractor's personnel and supervisory staff during performance of the work.

1.5.1 Requirements

The proposed plan shall be developed after a careful analysis of the work involved and shall be tailored specifically to the conditions of this project and shall include, as separate sections, a lead safety plan and an asbestos safety plan as described in Paragraph: Safety Plans. The Contractor's accident prevention plan shall also contain, as a minimum, the following general information or procedures for the activity indicated. The Contractor shall submit his plan for review and acceptance prior to commencing work.

1.5.1.1 Responsible Individual(s)

The Contractor shall designate an onsite employee as the individual responsible for insuring the accident prevention plan is implemented and enforced.

1.5.1.2 Subcontractor Supervision

Explain procedures to assure that subcontractor(s) fully comply with the accident prevention plan.

1.5.1.3 Indoctrination of New Employees

The plan shall include provisions for advising workers of the purpose of the accident prevention plan, specific hazards on the job and precautions to be taken, emergency procedures, information concerning tool box safety meetings, required protective equipment, cleanup rules and location of company safety rules (posting or handout).

1.5.1.4 Tool Box Safety Meetings

Hold weekly "Tool Box" safety meetings. Timely safety subjects shall be determined by a responsible individual. Employees will be informed of time, location, who will conduct, and subject. Identify procedures for including subcontractors. The Contractor shall provide a copy of the Weekly Tool Box Meeting and Monthly Supervisor's Safety Meeting to the Contracting Officer.

1.5.1.5 Fire Prevention and Protection

Identify source of fire protection. Insure adequate fire extinguishers, water barrels, or other fire-fighting equipment is located on site. Explain prevention activities to include storage areas and special hazards such as welding and use of flammable liquids, and other special hazards.

1.5.1.6 Housekeeping

Daily cleanup of all debris and waste materials is required. Adequate disposal containers should be placed strategically around the site. Debris shall be removed on a regular basis. Explain procedures that include use of barrels, dumpsters, trash chutes, etc.

1.5.1.7 Mechanical Equipment Inspection

All mechanical equipment (trucks, cranes, forklifts, backhoes, graders, etc.) shall be inspected prior to use and at fixed intervals throughout the life of the contract. Explain how inspections will be accomplished (frequency, by whom, and records to be kept).

1.5.1.8 First Aid and Medical Facilities

First aid facilities shall be made available on the job site. Arrangements for emergency medical attention shall be made prior to start of work. All emergency numbers (doctor, hospital, ambulance, fire department) shall be posted at the project superintendent's office.

1.5.1.9 Sanitation

Include provisions for toilet facilities, drinking water and washing facilities. A sufficient number of toilet facilities as specified in EM 385-1-1 shall be provided unless permission is granted to use existing facilities (portable chemical are authorized). Insure safe drinking water and individual cups are available. For the projects where corrosive or toxic materials are used, separate washing facilities are required.

1.5.1.10 Safety Promotions

The Contractor shall promote accident prevention. Identify method (posters, awards etc.).

1.5.1.11 Accident Reporting

All accidents (employee injuries, vehicle, building, or equipment damage etc.) regardless of their severity, shall be reported to the onsite government representative or to the area engineer, who in turn will advise the Contractor of forms to be submitted and timeframes.

1.5.1.12 Job Hazard Analysis

When job situations change and it is necessary to alter safety requirements, a Job Hazard Analysis will be accomplished, documented, and added as an addendum to the Accident Prevention Plan. Each Job Hazard Analysis shall include, but not be limited to, a description of the work, probable hazards related to that work and positive precautionary measures to be taken to reduce or eliminate each hazard. An example of changing situations may be new subcontractors performing work such as earth moving, trenching, concrete work, roofing, electrical, masonry etc. The onsite government representative will determine the format and amount of detail required of the written plan.

1.6 RADIOLOGICAL EQUIPMENT

The Contractor will comply to all applicable Nuclear Regulatory Commission, state, local, or other federal licenses or permits, and the requirements of EM 385-1-1, Safety and Health Requirement Manual, the Contractor is required to obtain a service permit to use, store, operate, or handle a radiation producing machine or radioactive materials on Pope AFB, NC. The service permit shall be obtained from the appropriate U.S. Army or U.S. Air Force Command through the Contracting Officer's representative. The Contractor should notify the Contracting Officer during the prework conference if a radiation producing device will be utilized on a DOD Installation in order to determine the permit application requirements, and allow a lead time of 45 days for obtaining a permit.

1.7 AIRFIELD SAFETY PRECAUTIONS (DEC 1991)

1.7.1 Definitions

As used in this clause-

a. "Landing areas" means:

(1) The primary surfaces, comprising the surface of the runway, runway shoulders, and lateral safety zones. The length of each primary surface is the same as the runway length. The width of each primary surface is 2,000 feet (1,000 feet on each side of the runway centerline);

(2) The "clear zone" beyond the ends of each runway, i.e., the extension of the primary surface for a distance of 1,000 feet beyond each end of each runway.

(3) All taxiways, plus the lateral clearance zones along each side for the length of the taxiways (the outer edge of each lateral clearance zone is laterally 250 feet from the far or opposite edge of the taxiway, e.g., a 75-foot-wide taxiway would have a combined width of taxiway and lateral clearance zones of 425 feet); and

(4) All aircraft parking aprons, plus the area 125 feet in width extending beyond each edge all around the aprons.

b. "Safety precaution areas" means those portions of approach-departure clearance zones and transitional zones where placement of objects incident to contract performance might result in vertical projections at or above the approach-departure clearance, or the transitional surface.

(1) The "approach-departure clearance surface" is an extension of the primary surface and the clear zone at each end of each runway, for a distance of 50,000 feet, first along an inclined (glide angle) and then along a horizontal plane, both flaring symmetrically about the runway centerline extended.

(a) The inclined plane (glide angle) begins in the clear zone 200 feet past the end of the runway (and primary surface) at the same elevation as the end of the runway. It continues upward at a slope of 50:1 (1 foot vertically for each 50 feet horizontally) to an elevation of 500 feet above the established airfield elevation. At that point the plane become horizontal, continuing at that same uniform elevation to a point 50,000 feet longitudinally from the beginning of the inclined plane (glide angle) and ending there.

(b) The width of the surface at the beginning of the inclined plane (glide angle) is the same as the width of the clear zone. It then flares uniformly, reaching the maximum width of 16,000 feet at the end.

(2) The "approach-departure clearance zone" is the ground area under the approach-departure clearance surface.

(3) The "transitional surface" is a sideways extension of all primary surfaces, clear zones, and approach-departure clearance surfaces along inclined planes.

(a) The inclined plane in each case begins at the edge of the surface.

(b) The slope of the incline plane is 7:1 (1 foot vertically for each 7 feet horizontally). It continues to the point of intersection with the-

(i) Inner horizontal surface (which is the horizontal plane 500 feet above the established airfield elevation); or

(ii) Outer horizontal surface (which is the horizontal plane 500 feet above the established airfield elevation), whichever is applicable.

(4) The "transitional zone" is the ground area under the transitional surface. (It adjoins the primary surface, clear zone, and approach-departure clearance zone.)

1.7.2 General

a. The Contractor shall comply with the requirements of this clause while-

(1) Operating all ground equipment (mobile or stationary);

(2) Placing all materials; and

(3) Performing all work, upon and around all airfields.

b. The requirements of this clause are in addition to any other safety requirements of this contract.

1.7.3 The Contractor shall

a. Report to the Contracting Officer before initiating any work;

b. Notify the Contracting Officer of proposed changes to locations and operations;

c. Not permit either its equipment or personnel to use any runway for purposes other than aircraft operation without permission of the Contracting Officer, unless the runway is-

(1) Closed by order of the Contracting Officer; and

(2) Marked as provided in paragraph 1.6.4 (2) of this clause;

d. Keep all paved surfaces, such as runways, taxiways, and hardstands, clean at all times and, specifically, free from small stones which might damage aircraft propellers or jet aircraft;

e. Operate mobile equipment according to the safety provisions of this clause, while actually performing work on the airfield. At all other times, the Contractor shall remove all mobile equipment to locations-

(1) Approved by the Contracting Officer;

(2) At a distance of at least 750 feet from the runway centerline, plus any additional distance, and

(3) Necessary to ensure compliance with the other provisions of this clause; and

f. Not open a trench unless material is on hand and ready for placing in the trench. As soon as practicable after material has been placed and work approved, the Contractor shall backfill and compact trenches as required by the contract. Meanwhile, all hazardous conditions shall be marked and lighted in accordance with the other provisions of this clause.

1.7.4 Landing Areas

The Contractor shall:

a. Place nothing upon the landing areas without the authorization of the Contracting Officer;

b. Outline those landing areas hazardous to aircraft, using (unless otherwise authorized by the Contracting Officer) red flags by day, and electric, battery-operated low-intensity red flasher lights by night;

c. Obtain, at an airfield where flying is controlled, additional permission from the control tower operator every time before entering any land area, unless the landing area is marked as hazardous in accordance with paragraph 1.6.4 (2) of this clause;

d. Identify all vehicles it operates in landing areas by means of a flag on a staff attached to, and flying above, the vehicle. The flag shall be three feet square, and consist of a checkered pattern of international orange and white squares of 1 foot on each side (except that the flag may vary up to ten percent from each of these dimensions);

e. Mark all other equipment and materials in the landing areas, using the same marking devices as in paragraph 1.6.4 (2) of this clause; and

f. Perform work so as to leave that portion of the landing area which is available to aircraft free from hazards, holes, piles of material, and projecting shoulders that might damage an airplane tire.

1.7.5 Safety Precaution Areas

The Contractor shall:

a. Place nothing upon the safety precaution areas without authorization of the Contracting Officer.

b. Mark all equipment and materials in safety precaution areas, using (unless otherwise authorized by the Contracting Officer) red flags by day, and electric, battery-operated, low-intensity red flasher lights by night.

c. Provide all objects placed in safety precaution areas with a red light or red lantern at night, if the objects project above the approach-departure clearance surface or above the transitional surface. (DFAR 252.236-7005)

1.8 NOT USED

1.9 OTHER SPECIAL SAFETY REQUIREMENTS

1.10.1 QD Safety Requirement

Since many of the buildings, pipe lines, and the storage tank scheduled for demolition/removal are located within a quantity distance (QD) of Dock H-3, other DoD and base explosive safety requirements may apply.

1.10.2 Area Vapor Monitoring

During the excavation of POL contaminated soil, the Contractor shall continuously monitor the air around the excavation site for indication of potentially hazardous vapors such as benzene, ethylbenzene, toluene, xylene, and other chemical vapors that may be appropriate. Contractor will describe sampling equipment, identify the responsible person to conduct sampling and describe the procedure for conducting air monitoring at the construction site. The Contractor will describe actions that will be taken in response if high concentrations of hazardous vapors are encountered during excavation (for example, change in PPE level).

1.10 EXCAVATION AND TRENCHING

The standards for excavation and trenching are outlined in 29 CFR 1926, Subpart P. These standards shall be followed in addition to those outlined in EM 385-1-1.

1.11 ASBESTOS AND LEAD PAINT

1.11.1 Safety Plans

The accident prevention plan shall contain distinct sections entitled Lead Safety Plan and Asbestos Safety Plan. Each section will address the following topics: qualifications of the competent person, laboratory qualifications, personal air monitoring, exposure assessment, work practices for specific Class I and Class II asbestos activities, engineering controls to reduce exposure, personal protection equipment, respiratory protection program, hygiene facilities and practices, medical surveillance, employee training, housekeeping, and waste containerization, labeling and disposal,

1.11.2 Safety and Health Oversight

Work which may expose personnel to asbestos and lead paint shall be supervised by a Competent Person as defined in 29 CFR 1926.1101 and 29 CFR 1926.62 and as required in paragraph: Qualifications of this section. The Competent Person shall be able to identify existing and predictable asbestos and lead paint hazards and shall have the authority to take corrective measures to eliminate them. Personal air monitoring shall be overseen by the Competent Person.

1.11.3 Qualifications

1.11.3.1 Competent Person

a. Asbestos

The Contractor's full-time onsite Competent Person shall meet the competent person requirements of 29 CFR 1926 Section .1101 and shall have completed the EPA Model Accreditation Plan (MAP) "Contractor/Supervisor" training accreditation required by 40 CFR 763, Subpart E, Appendix C, as well as any state specific requirements. The Competent Person shall be experienced in the administration and supervision of asbestos abatement projects, including exposure assessment and monitoring, work practices, protective measures for personnel, setting up and inspecting asbestos abatement work areas, ACM generated waste containment and disposal procedures, decontamination units installation and maintenance requirements, site safety and health requirements, etc. and have had a minimum of 2 years on-the-job experience.

b. Lead Paint

The Contractor's full-time onsite Competent Person shall meet the competent person requirements of 29 CFR 1926 Section .62, state specific requirements, and be experienced in administration and supervision of projects involving lead-based paint, including work practices, protective measures for personnel, etc. This person shall have completed a Contractor Supervisor LBP abatement course by an EPA Training Center or an equivalent certification course, and have had a minimum of 2 years on-the-job experience.

1.11.3.2 Testing Laboratory

a. Asbestos

The Contractor shall provide the name, address and telephone number of the independent testing laboratory selected to perform the sample analyses and report the results. The testing laboratory shall be completely independent from the Contractor as recognized by federal, state or local regulations. Written verification, signed by the testing laboratory principal and the Contractor, that the laboratory is fully equipped and proficient in conducting

PCM of airborne samples using the methods specified by 29 CFR 1926, Section .1101, OSHA method ID-160, and the most current version of NIOSH Pub No. 84-100 Method 7400. Evidence that the laboratory is currently judged proficient (classified as acceptable) in counting airborne asbestos samples by PCM by successful participation in each of the last 4 rounds in the American Industrial Hygiene Association (AIHA) shall be submitted.

b. Lead Paint

The laboratory performing the analysis shall be an EPA National Lead Laboratory Accreditation Program (NLLAP) accredited laboratory and be rated proficient in the NIOSH/EPA Environmental Lead Proficiency Analytical Testing Program (ELPAT). Currently, the American Association for Laboratory Accreditation (ASLA) and the American Industrial Hygiene Association (AIHA) are the EPA recognized laboratory accreditors.

1.11.4 Exposure Assessment

1.11.4.1 Asbestos

a. Initial Exposure Assessment

The Contractor's Competent Person shall conduct an exposure assessment immediately before or at the initiation of an asbestos abatement operation to ascertain expected exposures during that operation. The assessment shall be completed in time to comply with the requirements which are triggered by exposure data or the lack of a negative exposure assessment, and to provide information necessary to assure that all control systems planned are appropriate for that operation. The assessment shall take into consideration both the monitoring results and all observations, information or calculations which indicate employee exposure to asbestos, including any previous monitoring conducted in the workplace, or of the operations of the Contractor which indicate the levels of airborne asbestos likely to be encountered on the job.

b. Negative Exposure Assessment

The Contractor may provide a negative exposure assessment for the specific asbestos job covered by this Specification Section. When provided, the Negative Exposure Assessment shall be based on one or more of the following criteria:

(1) Objective Data: Objective data demonstrating that the product or material containing asbestos minerals or the activity involving such product or material cannot release airborne fibers in concentrations exceeding the PEL-TWA and PEL-Excursion Limit under those work conditions having the greatest potential for releasing asbestos.

(2) Prior Asbestos Jobs: Where the Contractor has monitored prior asbestos jobs for the PEL and the PEL-Excursion Limit within 12 months of the current job, the monitoring and analysis were performed in compliance with asbestos standard in effect; the data were obtained during work operations conducted under workplace conditions closely resembling the processes, type of material, control methods, work practices, and environmental conditions used and prevailing in the Contractor's current operations; the operations were conducted by employees whose training and experience are no more extensive than that of employees performing the current job; and these data show that under the conditions prevailing and which will prevail in the current workplace, there is a high degree of certainty that the monitoring covered exposure from employee exposures will not exceed the PEL-TWA and PEL-Excursion Limit.

(3) Initial Exposure Monitoring: The results of initial exposure monitoring of the current job, made from breathing zone air samples that

are representative of the 8-hour PEL-TWA and 30-minute short-term exposures of each employee. The monitoring covered exposure from operations which are most likely during the performance of the entire asbestos job to result in exposures over the PELs.

1.11.4.2 Lead Paint

For personnel who may be exposed to dust resulting from demolition or removal of painted surfaces, the Contractor is required to perform an exposure assessment to determine personnel exposure levels to lead. This assessment shall consist of personal air monitoring representative of a full shift. Airborne concentrations of lead shall be collected and analyzed in accordance with 29 CFR 1926 Section .62. Results shall be reported in micrograms per cubic meter of air. The Competent Person shall use personal air monitoring results to determine the effectiveness of engineering controls, the adequacy of PPE and to determine if proper work practices are being employed. The Contracting Officer shall be notified if any personal air monitoring result equals or exceeds 30 micrograms per cubic meter of air. The Contractor shall take steps to reduce the concentration of lead in the air. If results are obtained indicating employee exposure below the action level for lead (30 ug/m3) the Competent Person may recommend to the Contracting Officer, in writing, appropriate reductions in employee protection. Alternatively, as determined by the Competent Person, where the Contractor has previously monitored for lead exposures within the past 12 months during work operations conducted under workplace conditions closely resembling the processes, type of materials, control methods, work practices, and environmental conditions used and prevailing in the Contractor's current operations, the Contractor may, upon approval of the Contracting Officer, use this data in making the initial determination of employee exposure.

1.11.5 Employee Protection

Until monitoring results are received which document that the employee is not exposed above the action level for asbestos or lead, the Contractor shall implement employee protective measures as listed below:

1.11.5.1 Respiratory Protection Program

A respiratory protection program shall be established as required by 29 CFR 1926 Section .103, .1101 and .62 and in accordance with 29 CFR 1910 Section .134. A NIOSH-approved respirator and cartridges appropriate to the job, as determined by the Competent Person, shall be furnished to each employee and visitor potentially exposed to airborne asbestos or lead. A fit test shall be conducted in accordance with applicable sections of 29 CFR 1926.

1.11.5.2 Protective Equipment

The Contractor shall furnish, at no cost to personnel, equipment/clothing for protection from airborne and waterborne asbestos and LBP debris. An adequate supply of disposable full-body coveralls, steel toe/shank boots with nonskid soles or impermeable work boot covers, gloves, hard hats and eye protection shall be worn by workers in regulated work areas. Employees shall be instructed in appropriate practices for donning and removing protective equipment. Protective clothing and equipment shall not be removed from the work site at any time.

1.11.5.3 Decontamination Areas

The employer shall establish a decontamination area that is adjacent to the regulated area for the decontamination of employees and their equipment which is contaminated with asbestos. The decontamination area shall be a designated area shall be covered by an impermeable drop cloth and shall be of sufficient size to accommodate cleaning of equipment and for removing personal protective

equipment without spreading contamination beyond the area. The decontamination area shall be established in a manner such that employees must enter and exit the decontamination area through the equipment drop area. Work clothing, must be HEPA vacuumed before it is removed. Equipment and other surfaces shall be cleaned prior to removing the items from the decontamination area. To prevent cross-contamination, the employer shall provide storage facilities for protective work clothing and equipment that are segregated from storage areas for street clothes and non-contaminated equipment. The employer shall also assure that employees do not leave the workplace wearing any protective clothing or equipment that is required to be worn during the work shift.

1.11.5.4 Handwashing Facilities

The employer shall provide adequate handwashing facilities for use by employees in accordance with 29 CFR 1926.51(f) and shall assure that employees wash their hands and face at the end of the work-shift.

1.11.5.5 Medical Surveillance

a. Asbestos

Before being exposed to airborne asbestos fibers, workers shall be provided with a medical examination as required by 29 CFR 1926, Section .1101(m) and other pertinent state or local requirements. This requirement shall have been satisfied within the last 12 months. The same medical examination shall be given on an annual basis to employees engaged in an occupation involving asbestos and within 30 calendar days before or after the termination of employment in such occupation. X-ray films of asbestos workers shall be identified to the consulting radiologist and medical record jackets shall be marked with the word "asbestos."

b. Lead Paint

Medical surveillance for lead shall comply with the requirements of 29 CFR 1926 Section 62(j) and other pertinent state or local requirements. Analysis for blood lead and zinc protoporphyrin levels shall be included in the examination portion of the medical surveillance program.

1.11.5.6 Training

a. Asbestos

Workers conducting Class I and Class II asbestos work shall be provided training prior to the time of job assignment and, at least, annually. Training shall include, at a minimum the elements specified in 29 CFR 1926 Section .1101(k)(9)"Employee Information and Training".

b. Lead Paint

Workers potentially exposed to lead-contaminated dust shall be provided training regarding lead hazards prior to the time of job assignment and, at least, annually. Training shall include, at a minimum the elements specified in 29 CFR 1926 Section .62(l) "Employee Information and Training".

1.11.6 Engineering Controls

Engineering controls shall be employed to maintain the integrity of the asbestos material and lead paint and to minimize the potential for release of asbestos fibers or generation of lead-containing dust. Asbestos-containing materials shall not be cut, ground, abraded or handled in any other manner that may render the material friable as described in 40 CFR 61, Subpart M and OSHA 29 CFR 1926.1101. The contractor shall describe proposed engineering control methods and practices in the lead safety and asbestos safety portions of the

accident prevention plan.

PART 2 PRODUCTS (NOT APPLICABLE)

PART 3 EXECUTION (NOT APPLICABLE)

-- End of Section --

SECTION TABLE OF CONTENTS

DIVISION 01 - GENERAL REQUIREMENTS

SECTION 01450

CHEMICAL DATA QUALITY CONTROL

10/97

PART 1 GENERAL

1.1 REFERENCES
1.2 ACRONYMS
1.3 MEASUREMENT AND PAYMENT
1.4 CHEMISTRY REQUIREMENTS
1.4.1 Site History
1.4.2 Data Quality Objectives (DQO)
1.4.3 Sampling, Analysis and Measurement
1.4.3.1 Soil Sampling from Stockpiles
1.4.3.2 Hydrostatic Test Water
1.4.3.3 Not Used
1.4.3.4 Not Used
1.4.3.5 Manifesting Samples
1.4.3.6 Not Used.
1.4.3.7 Real-Time Instrumental Measurement Samples
1.5 QUALITY ASSURANCE ELEMENTS
1.5.1 Laboratory Validation Requirements
1.5.2 Not Used.
1.5.3 Not Used.
1.5.4 Review of Primary Laboratory Data
1.5.5 Validation of Data
1.6 SUBMITTALS
1.7 QUALIFICATIONS
1.7.1 Chemical Quality Control Officer
1.7.2 Project Chemist
1.7.3 Environmental Sampler
1.8 COORDINATION MEETING

PART 2 PRODUCTS (NOT APPLICABLE)

PART 3 EXECUTION

3.1 GENERAL REQUIREMENTS
3.2 QUALITY CONTROL PLAN
3.2.1 Additional Requirements
3.2.2 Chemistry Elements of the CQC Plan
3.2.2.1 Qualifications
3.2.2.2 Authority and Responsibility
3.3 SAMPLING AND ANALYSIS PLAN
3.3.1 Field Sampling Plan
3.3.2 Quality Assurance Project Plan
3.4 CHEMISTRY DATA PACKAGE
3.5 CONTROL OF CHEMICAL DATA QUALITY
3.6 ANALYTICAL TESTING LABORATORIES
3.6.1 Laboratory Analytical Requirements
3.6.2 Laboratory Performance
3.7 NOT USED
3.8 DOCUMENTATION

3.9 NOTIFICATION OF NON-COMPLIANCE

-- End of Section Table of Contents --

SECTION 01450

CHEMICAL DATA QUALITY CONTROL
10/97

PART 1 GENERAL

1.1 REFERENCES

The publications listed below form a part of this specification to the extent referenced. The publications are referred to in the text by basic designation only.

CODE OF FEDERAL REGULATIONS (CFR)

40 CFR 261	Identification and Listing of Hazardous Waste
40 CFR 262	Standards Applicable to Generators of Hazardous Waste
40 CFR 268	Land Disposal Restrictions
49 CFR 172	Hazardous Materials Table, Special Provisions, Hazardous Materials Communications, Emergency Response Information, and Training Requirements
49 CFR 178	Specifications for Packagings

ENGINEERING MANUALS (EM)

EM 200-1-3	(1994) Requirements for the Preparation of Sampling and Analysis Plans Ch 1
EM 200-1-6	(1997) Chemical Quality Assurance

ENGINEERING REGULATIONS (ER)

ER 1110-1-263	(1996) Data Quality Management for Hazardous, Toxic, Radioactive Waste Remedial Activities

ENVIRONMENTAL PROTECTION AGENCY (EPA)

EPA 540/R 94-012	(1994) Contract Laboratory Program National Functional Guidelines for Inorganic Data Review
EPA 540/R 94-013	(1994) Contract Laboratory Program National Functional Guidelines for Organic Data Review
EPA SW-846	(Rev O; updates I, II, IIA, IIB, and III) Test Methods for Evaluating Solid Waste (Vol IA, IB, IC, and II)

STATE OF NORTH CAROLINA DEPARTMENT OF THE ENVIRONMENT AND NATURAL RESOURCESOrg

(April 2001) Guidelines for Assessment and Corrective Action

1.2 ACRONYMS

The definition of acronyms used by the Contractor that pertain to chemical data quality control shall be clearly defined for all contract related products and communications.

1.3 MEASUREMENT AND PAYMENT

Separate payment will not be made for providing and maintaining the chemical data quality requirements including the chemical data quality management, chemical data validation, minimum chemical data reporting requirements, and chemical data quality submittal requirements; these costs shall be included in the applicable unit prices or lump sum prices contained in the bidding schedule.

1.4 CHEMISTRY REQUIREMENTS

Chemical Data Quality Control (CDQC) shall be as defined in ER 1110-1-263; this ER, which integrates USACE guidance on the subject, shall be supplemented by EM 200-1-6 for detail technical guidance on CDQC. Tables and charts defining Design Analysis (DA), ROD, and remedial technology specific chemistry shall be according to or consistent with EM 200-1-3.

1.4.1 Site History

The new POL Storage Complex will be located northwest of the aircraft operational apron (Green Ramp) off of Hurst Drive. The need for a new location for the Pope AFB POL Storage Complex has been mandated by the construction of explosive facilities near the complex. Quantity-distance (QD) safety zones (arcs) imposed by the explosive facilities mandate that the existing POL Storage Complex be reconfigured and relocated. The new site for the POL Storage complex has been chosen by the Air Force. A portion of the complex will populate the existing complex site, but only with those facilites that meet the quantity-distance requirements. The remaining facilities will be located on the new site, which is contiguous to the existing site. Construction of the new POL Storage Complex, and removal of the existing storage yard will be phased to allow for continuous and efficient fuel operations. The new POL Operations Facility (Phase I) will be completed and turned over to the Government prior to start of demolition of the existing POL/Ops Facility and refueler parking area. The new fueling system (Phase II) will be completed prior to start of demolition of the existing fueling system.

1.4.2 Data Quality Objectives (DQO)

Sample acquisition, chemical analysis and chemical parameter measurements shall be performed so that the resulting data meet and support data use requirements. The chemical data shall be acquired, documented, verified and reported to ensure that the specified precision, accuracy, representativeness, comparability, completeness and sensitivity requirements are achieved.

1.4.3 Sampling, Analysis and Measurement

1.4.3.1 Soil Sampling from Stockpiles

Reference SECTION 02316a EXCAVATION, TRENCHING AND BACKFILLING FOR UTILITIES SYSTEMS, paragraph 3.1.2 Stockpiles. Sampling of the stockpiles should be performed immediately before applying for a permit or before soil disposal. Clean soil as defined in Paragraph 1.4.3.7, shall be stockpiled separately from contaminated soil as determined with a PID and visual and olfactory evidence. Samples should be collected in a manner that causes the least disturbance of the internal structure of the soil and reduces its exposure to heat, sunlight and open air. Likewise, care should be taken to keep the samples from being

contaminated by other material at the site, or from contaminating other samples taken from the site (i.e., the sample container should be clean and the outside should be kept uncontaminated). When taking samples of potentially contaminated soil, care should be taken to reduce contact with skin or other body parts. The sample collector should wear disposable gloves. Gloves should be changed between samples to avoid cross-contamination. At a minimum, a clean, stainless steel spoon should be used to collect each sample. The spoon should be decontaminated between sampling events. Ideally, samples should be collected from cores of the soil. Disturb primary samples as little as possible during acquisition. For practical reasons, however, often it may be necessary to collect samples from a backhoe bucket, hand auger or even a shovel. As long as an effort is made to reduce the loss of contaminants from, and cross contamination to the sample, any of these methods may be used. When removed from the ground, each sample must be placed immediately in a proper container for the analysis to be performed. As soon as the sample is collected, the container should be immediately capped, sealed and appropriately stored at 4 degrees Celsius.

Sampling of the stockpile should be performed immediately before applying for a permit or before soil disposal. Check with the disposal facility concerning analytical requirements for disposal. The sampling protocol that follow is designed to determine the average contamination level in the stockpile. The number of samples required is based on the volume of the stockpiled soil. One composite sample must be taken and anlyzed for each 200 cubic yards of the stockpile. The volume of the stockpile can be determined either calculating from the specific geometry of the pile and/or the excavation, or by approximating from the general geometry of the pile as specified in the figure (as shown on the drawings). If the volume is approximated, use the maximum dimensions as indicated by the sketches for the different shapes of stockpiles in the Figure. Once the volume is determined, lay out a grid that divides the pile into square blocks with equal surface area. See Plan "Miscellaneous Site Details", which shows the construction of the stockpiles. A composite soil sample is composed of six primary soil samples. To achieve one composite sample, three primary soil samples must be collected from each of two randomly selected borings. These two selected borings must be performed for each 200 cubic yard grid block of stockpiled soil. Primary samples should be collected from borings as shown in the attached Figure. This will result in a total of six primary samples (one composite) from each 200 cubic yard grid block of stockpiled soil. Primary samples that are to be analyzed must be mixed into a composite sample by a DWQ approved laboratory under controlled conditions and by a qualified laboratory technician. Each composite sample must consist of a mixture of at least six primary samples of equal size. Mixing should be performed quickly, but in a manner that effectively combines the primary samples so that all portions of the mixture can be reasonably considered to contain nearly equal portions of each component primary sample. Because homogenization will, by its very nature, allow some loss of the most volatile petroleum constituents, care should be taken to perform the mixing under the best available environmental conditions to minimize this loss. Each composite sample should be analyzed by Methods EPA 5030/Modified 8015 (California Method) and EPA 3550/Modified 8015 (California Method), unless otherwise specified by the State of North Carolina and the disposal facility. The disposal facility may also require analysis according to the toxicity characteristic leaching procedure (TCLP).

1.4.3.2 Hydrostatic Test Water

From hydrostatic testing of the new fuel storage tank, it is anticipated that there will be 2 million gallons of this water to be disposed of in a storm sewer. One sample of the potable water which is to be used for the testing shall be analyzed for Total TAL Metals by EPA 6010B. After the hydrostatic testing, one sample from the tank water shall be collected and analyzed for Total Metals (Target Analyte List) EPA SW846 6010B, Volatile Organics EPA SW846 8260B, and Semivolatile Organics EPA SW846 8270C. If results for all analytes

are below North Carolina Surface Water Criteria, then the Contractor may dispose of the hydrostatic test water into a storm drain at a rate specified by Pope AFB.

1.4.3.3 Not Used
1.4.3.4 Not Used

1.4.3.5 Manifesting Samples

Material shipping manifesting shall be in accordance with 40 CFR 261, 40 CFR 262, 40 CFR 268, 49 CFR 172, and 49 CFR 178. Manifesting samples shall be collected and analyzed according to Paragraph 1.4.3.

1.4.3.6 Not Used.

1.4.3.7 Real-Time Instrumental Measurement Samples

Real-time instrumental measurements with a photo-ionization detector (PID) shall be used for screening for volatile fuel hydrocarbons onsite. Soil that reads <1 ppm is considered clean.

1.5 QUALITY ASSURANCE ELEMENTS

The Contractor shall be responsible for the following QA elements necessary to monitor and ensure the quality of chemical data produced.

1.5.1 Laboratory Validation Requirements

The Laboratory shall be certified by the State of North Carolina to perform any testing.

1.5.2 Not Used.
1.5.3 Not Used.

1.5.4 Review of Primary Laboratory Data

The Contractor shall be responsible for the independent data review of the entire primary data set.

1.5.5 Validation of Data

The Contractor shall be responsible for validating 10 percent of the data in accordance with EPA 540/R 94-012 and EPA 540/R 94-013. The data validation strategy shall be established at the beginning of the project to be consistent with project DQO.

1.6 SUBMITTALS

Government approval is required for submittals with a "G" designation; submittals not having a "G" designation are for information only. When used, a designation following the "G" designation identifies the office that will review the submittal for the Government. The following shall be submitted in accordance with Section 01330 SUBMITTAL PROCEDURES:

SD-03 Product Data

Sampling and Analysis Plan; G-RE.

The SAP including the Field Sampling Plan (FSP) and the Quality Assurance Project Plan (QAPP), no later than 20 business days after receipt of notice to proceed.

SD-06 Test Reports

Chemistry Data Package; G-RE

The chemistry data packages shall be provided to the Resident Engineer every week as soon as the data becomes available from the lab. Sampling locations should be clearly labeled and shown on an attached site plan.

1.7 QUALIFICATIONS

1.7.1 Chemical Quality Control Officer

As a minimum, the Contractor's Chemical Quality Control Officer shall have: a Bachelor degree in Chemistry; 2 years of experience related to investigations, studies, design and remedial actions at HTRW sites; and 2 field seasons (or one continuous calendar year experience) in calibration and operation of various field monitoring devices as well as standard analytical chemistry methods common for analyzing soil, water, air and other materials for chemical contamination assessment, including hazardous waste manifesting. The Chemical Quality Control Officer shall ensure that all chemistry related objectives including responsibilities for DQO definitions, sampling and analysis, project requirements for data documentation and validation, and final project reports are attained. The Chemical Quality Control officer need not be present onsite during routine sampling, but shall be available for consultation with Government and Contractor personnel.

1.7.2 Project Chemist

As a minimum, the Contractor's Senior Chemist shall have: a Bachelor degree in Chemistry; 3 years of experience related to investigations, studies, design and remedial actions at HTRW sites; 2 field seasons experience in calibrating and operating various field monitoring devices; and 2 years of experience in the operation of an HTRW commercial laboratory with standard analytical chemistry methods common for analyzing soil, water, air and other materials for chemical contamination assessment, including data for hazardous waste manifesting. The project chemist shall ensure that all chemistry related goals of the program are attained. The project chemist shall be onsite during all sampling events and shall also be available for consultation with Government personnel.

1.7.3 Environmental Sampler

As a minimum, the Contractor's Environmental Sampler shall have: a associate's degree in Chemistry, Environmental Science, Engineering, Geology, Hydrology, or a related field; 2 years of experience in the development and preparation of SAP and work plans; 2 years of experience in and knowledge of EPA methods for collecting environmental and hazardous waste samples; 1 years of experience in operation of field screening equipment (e.g. PID, FID, infrared spectrometer, immunoassay, etc.); and 1 field seasons of experience with the particular field screening techniques for use on this project. The Environmental Sampler shall collect all onsite samples and perform all field screening tests. The Environmental Sampler shall review the sampling results, and provide recommendations for the Contractor's sampling program. The Environmental Sampler shall be onsite during excavation and stockpiling operations involving contaminated soil or soil to be checked for contamination.

1.8 COORDINATION MEETING

After the preconstruction conference, before any sampling or testing, the Contractor and the Contracting Officer will meet to discuss the CQC Plan and the SAP. The coordination meeting will be simultaneous to any CQC coordination meeting required in Section 01451 CONTRACTOR QUALITY CONTROL unless otherwise indicated or directed. A list of definable features that involve chemical

measurements shall be agreed upon. At a minimum, each matrix (soil, water, air, containerized wastes, radioactive wastes, instrumental chemical parameter measurement, etc.) shall be a definable work feature. Management of the chemical data quality system including project DQO, project submittals, chemical data documentation, chemical data assessment, required sampling and analysis protocols, and minimum data reporting requirements shall be agreed upon. The meeting will serve to establish an interrelationship between the Contractor's chemical data quality management and Government chemical quality assurance requirements. Minutes of the meeting will be documented by the Government and shall be signed by both the Contractor and the Contracting Officer. The minutes will include any or all unresolved chemical issues along with the conditions for resolution and will become a part of the contract file.

PART 2 PRODUCTS (NOT APPLICABLE)

PART 3 EXECUTION

3.1 GENERAL REQUIREMENTS

The Contractor shall be responsible for chemical sample acquisition, sample analysis, instrumental measurements of chemical parameters and for chemical data quality control. An effective chemical data quality control system shall be established that meets the requirements for the chemical measurement DQO applicable to the project. The system shall cover chemical measurements pertaining to and required for Contractor and subcontractor produced chemical data. The Contractor shall control field screening, sampling, and testing in conjunction with remedial activities to meet all DQO; minimize the amount of excavated material requiring temporary storage; prevent dilution of contaminated soils with clean soils; and ensure completion of work within the required time.

3.2 QUALITY CONTROL PLAN

3.2.1 Additional Requirements

In addition to the quality control requirements specified in Section 01451 CONTRACTOR QUALITY CONTROL, the CQC Plan shall incorporate the qualifications, authority and responsibilities of all chemical quality management and support personnel. Chemical measurements including sampling and/or chemical parameter measurement will not be permitted to begin until after production and acceptance of the CQC Plan, and Government approval of the SAP.

3.2.2 Chemistry Elements of the CQC Plan

To cover contract related chemical measurements by the Contractor and all subcontractors, the CQC Plan shall include the following as a minimum.

3.2.2.1 Qualifications

Names, education, experience qualifications, authorities, and decision-making responsibilities of all chemical quality management and support personnel. The CQC Plan shall contain a copy of a letter from the project QC manager designating and authorizing a Chemical Quality Control Officer and chemical quality control organization staff.

3.2.2.2 Authority and Responsibility

A diagram, flow chart, or figure clearly depicting the chemical data quality management and support staff and the authority and responsibility of each for chemical sampling and analysis, procedures for corrective actions, deliverables and submittals, deviations and changes, chemical quality documentation, data validation, minimum data reporting requirements, and DQO for chemical parameter measurement by the Contractor and subcontractors. The contents of this section

of the CQC Plan shall be included in the applicable "Project Organization" elements of the FSP and the QAPP.

3.3 SAMPLING AND ANALYSIS PLAN

The SAP shall be prepared in accordance with CDQC requirements and EM 200-1-3. The SAP shall be a single document that contains two distinct elements: FSP and QAPP. Sections of the FSP and QAPP shall be cross referenced. The SAP shall confirm the Contractor's understanding of the contract requirements for chemical data quality control, and shall describe procedures for field sampling and sample submittal for analysis, field chemical parameter measurement, data documentation, data assessment and data reporting requirements. The SAP shall delineate the methods the Contractor intends to use to accomplish the chemical quality control items to assure accurate, precise, representative, complete, legally defensible and comparable data. The SAP shall describe all chemical parameter measurements for all matrices for all phases of the remediation contract. As a single interrelated document, the SAP shall be provided to field and laboratory personnel. The Contractor may propose original/innovative approaches to chemical parameter measurements for cost reduction and remediation efficiency by abbreviated sampling, contingency sampling and/or contingency analysis, indicator or tracer analysis, onsite analytical services, equivalency or screening methods. The SAP shall clearly identify the Contractor obtained laboratories. The Contractor shall furnish copies of the Government approved SAP to all laboratories and the Contractor's field sampling crew. The SAP shall address all levels of the investigation with enough detail to become a document which may be used as an audit guide for field and laboratory work.

3.3.1 Field Sampling Plan

The FSP shall contain necessary technical detail and direction for the field personnel to understand sampling and field measurement requirements. The FSP shall provide a comprehensive description and full detail for personnel to perform all onsite activities required to attain project DQO, including: locations of samples, sampling procedures for onsite and offsite chemical analysis, summaries of analyses to be performed on samples, shipment of samples for offsite analyses, performance of onsite and offsite instrumental parameter measurements, data documentation and reporting requirements.

3.3.2 Quality Assurance Project Plan

The QAPP shall contain necessary technical detail and direction for field and laboratory personnel to understand project sample analysis, quality control and data reporting requirements, analytical methods, required detection limits, QC requirements, and data validation and reporting requirements.

3.4 CHEMISTRY DATA PACKAGE

The chemistry data package shall contain information to demonstrate that the project's DQO have been fulfilled. The chemistry data package shall show an understandable rationale for sample identification, time and location, and method of sampling of each sample. The laboratory data package shall show surrogate recoveries, method blank results, MS/MSD results, and precision between field and lab duplicates. Chromatograms may be requested by the RE initially to determine whether sample calibration and integration is correct. All samples shall be reported on a dry-weight basis.

3.5 CONTROL OF CHEMICAL DATA QUALITY

Contractor chemical data quality control shall ensure that a quality control program is in place that assures sampling and analytical activities and the resulting chemical parameter measurement data comply with the DQO and the requirements of the SAP. The Contractor shall utilize the three-phase control

system that includes a preparatory, initial and follow-up phase for each definable feature of work. The Contractor's three-phase chemical data control process shall ensure that data reporting requirements are achieved and shall be implemented according to Section 01451 CONTRACTOR QUALITY CONTROL. The three-phase chemical data control process shall be combined with that under Section 01451 CONTRACTOR QUALITY CONTROL.

3.6 ANALYTICAL TESTING LABORATORIES

The Contractor shall propose the analytical laboratories to be used for the primary samples analyses. Laboratory validation requirements shall be in accordance with paragraph Laboratory Validation Requirements. The Contractor may utilize its own laboratory or utilize subcontract laboratories to achieve the primary required sample analyses.

3.6.1 Laboratory Analytical Requirements

The Contractor shall provide the specified chemical analyses by the Contractor's laboratory. The Contractor shall provide chemical analyses to achieve the project DQO for all parameters specified by the methods. To give the USACE programs the greatest flexibility in the execution of its projects, the EPA SW-846 methods are generally the methods employed for the analytical testing of environmental samples. These methods are flexible and shall be adapted to individual project-specific requirements.

3.6.2 Laboratory Performance

The Contractor shall provide continued acceptable analytical performance and shall establish a procedure to address data deficiencies noted by review and/or quality assurance sample results. The Contractor shall provide and implement a mechanism for providing analytical labs with the SAP or QAPP portion of the SAP, for monitoring the lab's performance and for performing corrective action procedures. The Contractor shall acquire analytical services with additional State of North Carolina validated laboratories in the event a project lab loses its validation status during the project.

3.7 NOT USED

3.8 DOCUMENTATION

Documentation records shall be provided as factual evidence that required chemical data has been produced and chemical data quality has been achieved. The documentation shall comply with the requirements specified in paragraphs SAMPLING AND ANALYSIS PLAN, and CHEMISTRY DATA PACKAGE.

3.9 NOTIFICATION OF NON-COMPLIANCE

The Contracting Officer will notify the Contractor of any detected noncompliance with the foregoing requirements. The Contractor shall take immediate corrective action after receipt of such notice.

-- End of Section --

SECTION TABLE OF CONTENTS

DIVISION 01 - GENERAL REQUIREMENTS

SECTION 01451A

CONTRACTOR QUALITY CONTROL

05/02

PART 1 GENERAL

1.1 REFERENCES
1.2 PAYMENT

PART 2 PRODUCTS (Not Applicable)

PART 3 EXECUTION

3.1 GENERAL REQUIREMENTS
3.2 QUALITY CONTROL PLAN
3.2.1 Content of the CQC Plan
3.2.2 Acceptance of Plan
3.2.3 Notification of Changes
3.3 COORDINATION MEETING
3.4 QUALITY CONTROL ORGANIZATION
3.4.1 Personnel Requirements
3.4.2 CQC System Manager
3.4.3 CQC Personnel
3.4.4 Additional Requirement
3.4.5 Organizational Changes
3.5 SUBMITTALS AND DELIVERABLES
3.6 CONTROL
3.6.1 Preparatory Phase
3.6.2 Initial Phase
3.6.3 Follow-up Phase
3.6.4 Additional Preparatory and Initial Phases
3.7 TESTS
3.7.1 Testing Procedure
3.7.2 Testing Laboratories
3.7.2.1 Capability Check
3.7.2.2 Capability Recheck
3.7.3 Onsite Laboratory
3.7.4 Furnishing or Transportation of Samples for Testing
3.8 COMPLETION INSPECTION
3.8.1 Punch-Out Inspection
3.8.2 Pre-Final Inspection
3.8.3 Final Acceptance Inspection
3.9 DOCUMENTATION
3.10 SAMPLE FORMS
3.11 NOTIFICATION OF NONCOMPLIANCE

-- End of Section Table of Contents --

UFGS-01451A (May 2002)

SECTION 01451A

CONTRACTOR QUALITY CONTROL
05/02

PART 1 GENERAL

1.1 REFERENCES

The publications listed below form a part of this specification to the extent referenced. The publications are referred to in the text by basic designation only.

AMERICAN SOCIETY FOR TESTING AND MATERIALS (ASTM)

ASTM D 3740	(2001) Minimum Requirements for Agencies Engaged in the Testing and/or Inspection of Soil and Rock as Used in Engineering Design and Construction
ASTM E 329	(2000b) Agencies Engaged in the Testing and/or Inspection of Materials Used in Construction

1.2 PAYMENT

Separate payment will not be made for providing and maintaining an effective Quality Control program, and all costs associated therewith shall be included in the applicable unit prices or lump-sum prices contained in the Bidding Schedule.

PART 2 PRODUCTS (Not Applicable)

PART 3 EXECUTION

3.1 GENERAL REQUIREMENTS

The Contractor is responsible for quality control and shall establish and maintain an effective quality control system in compliance with the Contract Clause titled "Inspection of Construction." The quality control system shall consist of plans, procedures, and organization necessary to produce an end product which complies with the contract requirements. The system shall cover all construction operations, both onsite and offsite, and shall be keyed to the proposed construction sequence. The site project superintendent will be held responsible for the quality of work on the job and is subject to removal by the Contracting Officer for non-compliance with the quality requirements specified in the contract. The site project superintendent in this context shall be the highest level manager responsible for the overall construction activities at the site, including quality and production. The site project superintendent shall maintain a physical presence at the site at all times, except as otherwise acceptable to the Contracting Officer, and shall be responsible for all construction and construction related activities at the site.

3.2 QUALITY CONTROL PLAN

The Contractor shall furnish for review by the Government, not later than 5 days after receipt of notice to proceed, the Contractor Quality Control (CQC) Plan proposed to implement the requirements of the Contract Clause titled "Inspection of Construction." The plan shall identify personnel, procedures,

control, instructions, tests, records, and forms to be used. The Government will consider an interim plan for the first 30 days of operation. Construction will be permitted to begin only after acceptance of the CQC Plan or acceptance of an interim plan applicable to the particular feature of work to be started. Work outside of the features of work included in an accepted interim plan will not be permitted to begin until acceptance of a CQC Plan or another interim plan containing the additional features of work to be started.

3.2.1 Content of the CQC Plan

The CQC Plan shall include, as a minimum, the following to cover all construction operations, both onsite and offsite, including work by subcontractors, fabricators, suppliers, and purchasing agents:

a. A description of the quality control organization, including a chart showing lines of authority and acknowledgment that the CQC staff shall implement the three phase control system for all aspects of the work specified. The staff shall include a CQC System Manager who shall report to the project superintendent.

b. The name, qualifications (in resume format), duties, responsibilities, and authorities of each person assigned a CQC function.

c. A copy of the letter to the CQC System Manager signed by an authorized official of the firm which describes the responsibilities and delegates sufficient authorities to adequately perform the functions of the CQC System Manager, including authority to stop work which is not in compliance with the contract. The CQC System Manager shall issue letters of direction to all other various quality control representatives outlining duties, authorities, and responsibilities. Copies of these letters shall also be furnished to the Government.

d. Procedures for scheduling, reviewing, certifying, and managing submittals, including those of subcontractors, offsite fabricators, suppliers, and purchasing agents. These procedures shall be in accordance with Section 01330 SUBMITTAL PROCEDURES.

e. Control, verification, and acceptance testing procedures for each specific test to include the test name, specification paragraph requiring test, feature of work to be tested, test frequency, and person responsible for each test. (Laboratory facilities must be approved by the Contracting Officer.)

f. Procedures for tracking preparatory, initial, and follow-up control phases and control, verification, and acceptance tests including documentation.

g. Procedures for tracking construction deficiencies from identification through acceptable corrective action. These procedures shall establish verification that identified deficiencies have been corrected.

h. Reporting procedures, including proposed reporting formats.

i. A list of the definable features of work. A definable feature of work is a task which is separate and distinct from other tasks, has separate control requirements, and may be identified by different trades or disciplines, or it may be work by the same trade in a different environment. Although each section of the specifications may generally be considered as a definable feature of work, there are frequently more than one definable features under a particular section. This list will be agreed upon during the coordination meeting.

3.2.2 Acceptance of Plan

Acceptance of the Contractor's plan is required prior to the start of construction. Acceptance is conditional and will be predicated on satisfactory performance during the construction. The Government reserves the right to require the Contractor to make changes in his CQC Plan and operations including removal of personnel, as necessary, to obtain the quality specified.

3.2.3 Notification of Changes

After acceptance of the CQC Plan, the Contractor shall notify the Contracting Officer in writing of any proposed change. Proposed changes are subject to acceptance by the Contracting Officer.

3.3 COORDINATION MEETING

After the Preconstruction Conference, before start of construction, and prior to acceptance by the Government of the CQC Plan, the Contractor shall meet with the Contracting Officer or Authorized Representative and discuss the Contractor's quality control system. The CQC Plan shall be submitted for review a minimum of 7 calendar days prior to the Coordination Meeting. During the meeting, a mutual understanding of the system details shall be developed, including the forms for recording the CQC operations, control activities, testing, administration of the system for both onsite and offsite work, and the interrelationship of Contractor's Management and control with the Government's Quality Assurance. Minutes of the meeting shall be prepared by the Government and signed by both the Contractor and the Contracting Officer. The minutes shall become a part of the contract file. There may be occasions when subsequent conferences will be called by either party to reconfirm mutual understandings and/or address deficiencies in the CQC system or procedures which may require corrective action by the Contractor.

3.4 QUALITY CONTROL ORGANIZATION

3.4.1 Personnel Requirements

The requirements for the CQC organization are a CQC System Manager and sufficient number of additional qualified personnel to ensure safety and contract compliance. The Safety and Health Manager shall receive direction and authority from the CQC System Manager and shall serve as a member of the CQC staff. Personnel identified in the technical provisions as requiring specialized skills to assure the required work is being performed properly will also be included as part of the CQC organization.The Contractor's CQC staff shall maintain a presence at the site at all times during progress of the work and have complete authority and responsibility to take any action necessary to ensure contract compliance. The CQC staff shall be subject to acceptance by the Contracting Officer. The Contractor shall provide adequate office space, filing systems and other resources as necessary to maintain an effective and fully functional CQC organization. Complete records of all letters, material submittals, show drawing submittals, schedules and all other project documentation shall be promptly furnished to the CQC organization by the Contractor. The CQC organization shall be responsible to maintain these documents and records at the site at all times, except as otherwise acceptable to the Contracting Officer.

3.4.2 CQC System Manager

The Contractor shall identify as CQC System Manager an individual within the onsite work organization who shall be responsible for overall management of CQC and have the authority to act in all CQC matters for the Contractor. The CQC System Manager shall be a graduate engineer, graduate architect, or a graduate of construction management, with a minimum of 4 years' construction experience on construction similar to this contract or a construction person with a minimum of 10 years' experience in related work. This CQC System Manager shall

be on the site at all times during construction and shall be employed by the prime Contractor. The CQC System Manager shall be assigned no other duties. An alternate for the CQC System Manager shall be identified in the plan to serve in the event of the System Manager's absence. The requirements for the alternate shall be the same as for the designated CQC System Manager.

3.4.3 CQC Personnel

In addition to CQC personnel specified elsewhere in the contract, the Contractor shall provide as part of the CQC organization specialized personnel to assist the CQC System Manager for the following areas: electrical, mechanical, civil, and submittals clerk. These individuals shall be directly employed by the prime Contractor and may not be employed by a supplier or subcontractor on this project; be responsible to the CQC System Manager; be physically present at the construction site during work on their areas of responsibility or no later than 60 days after Notice to Proceed, whichever is earlier; have the necessary education and/or experience in accordance with the experience matrix listed herein. These individuals shall have no other duties other than quality control.

Experience Matrix

	Area	Qualifications
a.	Civil	Graduate Civil Engineer with 4 years' experience in the type of work being performed on this project or technician with 6 years' related experience
b.	Mechanical	Graduate Mechanical Engineer with 4 years' experience or person with 6 years' related experience
c.	Electrical	Graduate Electrical Engineer with 4 years' related experience or person with 6 years' related experience
d.	Submittals	Submittal Clerk with 2 years' experience

3.4.4 Additional Requirement

In addition to the above experience and education requirements the CQC System Manager shall have completed the course entitled "Construction Quality Management For Contractors". This course is offered on a quarterly basis within the Savannah District boundaries. CQC System Managers who have not successfully completed this course must attend the next available training session. Failure to successfully complete this training within the next available training date will be grounds for removal as CQC System Manager. There is currently a nominal fee to cover the cost of the training materials for Contractors who have current contracts with the Savannah District.

3.4.5 Organizational Changes

The Contractor shall maintain the CQC staff at full strength at all times. When it is necessary to make changes to the CQC staff, the Contractor shall revise the CQC Plan to reflect the changes and submit the changes to the Contracting

Officer for acceptance.

3.5 SUBMITTALS AND DELIVERABLES

Submittals, if needed, shall be made as specified in Section 01330 SUBMITTAL PROCEDURES. The CQC organization shall be responsible for certifying that all submittals and deliverables are in compliance with the contract requirements. When Section 15950A HEATING, VENTILATING AND AIR CONDITIONING (HVAC) CONTROL SYSTEMS; 15951A DIRECT DIGITAL CONTROL FOR HVAC; 15990A TESTING, ADJUSTING, AND BALANCING OF HVAC SYSTEMS; or 15995A COMMISSIONING OF HVAC SYSTEMS are included in the contract, the submittals required by those sections shall be coordinated with Section 01330 SUBMITTAL PROCEDURES to ensure adequate time is allowed for each type of submittal required.

3.6 CONTROL

Contractor Quality Control is the means by which the Contractor ensures that the construction, to include that of subcontractors and suppliers, complies with the requirements of the contract. At least three phases of control shall be conducted by the CQC System Manager for each definable feature of the construction work as follows:

3.6.1 Preparatory Phase

This phase shall be performed prior to beginning work on each definable feature of work, after all required plans/documents/materials are approved/accepted, and after copies are at the work site. This phase shall include:

a. A review of each paragraph of applicable specifications, reference codes, and standards. A copy of those sections of referenced codes and standards applicable to that portion of the work to be accomplished in the field shall be made available by the Contractor at the preparatory inspection. These copies shall be maintained in the field and available for use by Government personnel until final acceptance of the work.

b. A review of the contract drawings.

c. A check to assure that all materials and/or equipment have been tested, submitted, and approved.

d. Review of provisions that have been made to provide required control inspection and testing.

e. Examination of the work area to assure that all required preliminary work has been completed and is in compliance with the contract.

f. A physical examination of required materials, equipment, and sample work to assure that they are on hand, conform to approved shop drawings or submitted data, and are properly stored.

g. A review of the appropriate activity hazard analysis to assure safety requirements are met.

h. Discussion of procedures for controlling quality of the work including repetitive deficiencies. Document construction tolerances and workmanship standards for that feature of work.

i. A check to ensure that the portion of the plan for the work to be performed has been accepted by the Contracting Officer.

j. Discussion of the initial control phase.

k. The Government shall be notified at least 48 hours in advance of beginning the preparatory control phase. This phase shall include a meeting conducted by the CQC System Manager and attended by the superintendent, other CQC personnel (as applicable), and the foreman responsible for the definable feature. The results of the preparatory phase actions shall be documented by separate minutes prepared by the CQC System Manager and attached to the daily CQC report. The Contractor shall instruct applicable workers as to the acceptable level of workmanship required in order to meet contract specifications.

3.6.2 Initial Phase

This phase shall be accomplished at the beginning of a definable feature of work. The following shall be accomplished:

a. A check of work to ensure that it is in full compliance with contract requirements. Review minutes of the preparatory meeting.

b. Verify adequacy of controls to ensure full contract compliance. Verify required control inspection and testing.

c. Establish level of workmanship and verify that it meets minimum acceptable workmanship standards. Compare with required sample panels as appropriate.

d. Resolve all differences.

e. Check safety to include compliance with and upgrading of the safety plan and activity hazard analysis. Review the activity analysis with each worker.

f. The Government shall be notified at least 24 hours in advance of beginning the initial phase. Separate minutes of this phase shall be prepared by the CQC System Manager and attached to the daily CQC report. Exact location of initial phase shall be indicated for future reference and comparison with follow-up phases.

g. The initial phase should be repeated for each new crew to work onsite, or any time acceptable specified quality standards are not being met.

3.6.3 Follow-up Phase

Daily checks shall be performed to assure control activities, including control testing, are providing continued compliance with contract requirements, until completion of the particular feature of work. The checks shall be made a matter of record in the CQC documentation. Final follow-up checks shall be conducted and all deficiencies corrected prior to the start of additional features of work which may be affected by the deficient work. The Contractor shall not build upon nor conceal non-conforming work.

3.6.4 Additional Preparatory and Initial Phases

Additional preparatory and initial phases shall be conducted on the same definable features of work if: the quality of on-going work is unacceptable; if there are changes in the applicable CQC staff, onsite production supervision or work crew; if work on a definable feature is resumed after a substantial period of inactivity; or if other problems develop.

3.7 TESTS

3.7.1 Testing Procedure

The Contractor shall perform specified or required tests to verify that control

measures are adequate to provide a product which conforms to contract requirements. Upon request, the Contractor shall furnish to the Government duplicate samples of test specimens for possible testing by the Government. Testing includes operation and/or acceptance tests when specified. The Contractor shall procure the services of a Corps of Engineers approved testing laboratory or establish an approved testing laboratory at the project site. The Contractor shall perform the following activities and record and provide the following data:

a. Verify that testing procedures comply with contract requirements.

b. Verify that facilities and testing equipment are available and comply with testing standards.

c. Check test instrument calibration data against certified standards.

d. Verify that recording forms and test identification control number system, including all of the test documentation requirements, have been prepared.

e. Results of all tests taken, both passing and failing tests, shall be recorded on the CQC report for the date taken. Specification paragraph reference, location where tests were taken, and the sequential control number identifying the test shall be given. If approved by the Contracting Officer, actual test reports may be submitted later with a reference to the test number and date taken. An information copy of tests performed by an offsite or commercial test facility shall be provided directly to the Contracting Officer. Failure to submit timely test reports as stated may result in nonpayment for related work performed and disapproval of the test facility for this contract.

3.7.2 Testing Laboratories

3.7.2.1 Capability Check

The Government reserves the right to check laboratory equipment in the proposed laboratory for compliance with the standards set forth in the contract specifications and to check the laboratory technician's testing procedures and techniques. Laboratories utilized for testing soils, concrete, asphalt, and steel shall meet criteria detailed in ASTM D 3740 and ASTM E 329.

3.7.2.2 Capability Recheck

If the selected laboratory fails the capability check, the Contractor will be assessed a charge to reimburse the Government for each succeeding recheck of the laboratory or the checking of a subsequently selected laboratory. Such costs will be deducted from the contract amount due the Contractor.

3.7.3 Onsite Laboratory

The Government reserves the right to utilize the Contractor's control testing laboratory and equipment to make assurance tests, and to check the Contractor's testing procedures, techniques, and test results at no additional cost to the Government.

3.7.4 Furnishing or Transportation of Samples for Testing

Costs incidental to the transportation of samples or materials shall be borne by the Contractor. Samples of materials for test verification and acceptance testing by the Government shall be delivered to the following address:

US Army Engineer District, Savannah
Environmental & Materials Unit

200 North Cobb Parkway
Building 400, Suite 404
Marietta, GA 30062

Coordination for each specific test will be made through the Area Office.

3.8 COMPLETION INSPECTION

3.8.1 Punch-Out Inspection

Near the end of the work, or any increment of the work established by a time stated in the Special Clause, "Commencement, Prosecution, and Completion of Work", or by the specifications, the CQC Manager shall conduct an inspection of the work. A punch list of items which do not conform to the approved drawings and specifications shall be prepared and included in the CQC documentation, as required by paragraph DOCUMENTATION. The list of deficiencies shall include the estimated date by which the deficiencies will be corrected. The CQC System Manager or staff shall make a second inspection to ascertain that all deficiencies have been corrected. Once this is accomplished, the Contractor shall notify the Government that the facility is ready for the Government Pre-Final inspection.

3.8.2 Pre-Final Inspection

The Government will perform the pre-final inspection to verify that the facility is complete and ready to be occupied. A Government Pre-Final Punch List may be developed as a result of this inspection. The Contractor's CQC System Manager shall ensure that all items on this list have been corrected before notifying the Government, so that a Final inspection with the customer can be scheduled. Any items noted on the Pre-Final inspection shall be corrected in a timely manner. These inspections and any deficiency corrections required by this paragraph shall be accomplished within the time slated for completion of the entire work or any particular increment of the work if the project is divided into increments by separate completion dates.

3.8.3 Final Acceptance Inspection

The Contractor's Quality Control Inspection personnel, plus the superintendent or other primary management person, and the Contracting Officer's Representative shall be in attendance at the final acceptance inspection. Additional Government personnel including, but not limited to, those from Base/Post Civil Facility Engineer user groups, and major commands may also be in attendance. The final acceptance inspection will be formally scheduled by the Contracting Officer based upon results of the Pre-Final inspection. Notice shall be given to the Contracting Officer at least 14 days prior to the final acceptance inspection and shall include the Contractor's assurance that all specific items previously identified to the Contractor as being unacceptable, along with all remaining work performed under the contract, will be complete and acceptable by the date scheduled for the final acceptance inspection. Failure of the Contractor to have all contract work acceptably complete for this inspection will be cause for the Contracting Officer to bill the Contractor for the Government's additional inspection cost in accordance with the contract clause titled "Inspection of Construction".

3.9 DOCUMENTATION

The Contractor shall maintain current records providing factual evidence that required quality control activities and/or tests have been performed. These records shall include the work of subcontractors and suppliers and shall be on an acceptable form that includes, as a minimum, the following information:

a. Contractor/subcontractor and their area of responsibility.

b. Operating plant/equipment with hours worked, idle, or down for repair.

c. Work performed each day, giving location, description, and by whom. When Network Analysis (NAS) is used, identify each phase of work performed each day by NAS activity number.

d. Test and/or control activities performed with results and references to specifications/drawings requirements. The control phase shall be identified (Preparatory, Initial, Follow-up). List of deficiencies noted, along with corrective action.

e. Quantity of materials received at the site with statement as to acceptability, storage, and reference to specifications/drawings requirements.

f. Submittals and deliverables reviewed, with contract reference, by whom, and action taken.

g. Offsite surveillance activities, including actions taken.

h. Job safety evaluations stating what was checked, results, and instructions or corrective actions.

i. Instructions given/received and conflicts in plans and/or specifications.

j. Contractor's verification statement.

These records shall indicate a description of trades working on the project; the number of personnel working; weather conditions encountered; and any delays encountered. These records shall cover both conforming and deficient features and shall include a statement that equipment and materials incorporated in the work and workmanship comply with the contract. The original and one copy of these records in report form shall be furnished to the Government daily within 24 hours after the date covered by the report, except that reports need not be submitted for days on which no work is performed. As a minimum, one report shall be prepared and submitted for every 7 days of no work and on the last day of a no work period. All calendar days shall be accounted for throughout the life of the contract. The first report following a day of no work shall be for that day only. Reports shall be signed and dated by the CQC System Manager. The report from the CQC System Manager shall include copies of test reports and copies of reports prepared by all subordinate quality control personnel.

3.10 SAMPLE FORMS

Sample forms are included in Attachment 1 to Section 00800.

3.11 NOTIFICATION OF NONCOMPLIANCE

The Contracting Officer will notify the Contractor of any detected noncompliance with the foregoing requirements. The Contractor shall take immediate corrective action after receipt of such notice. Such notice, when delivered to the Contractor at the work site, shall be deemed sufficient for the purpose of notification. If the Contractor fails or refuses to comply promptly, the Contracting Officer may issue an order stopping all or part of the work until satisfactory corrective action has been taken. No part of the time lost due to such stop orders shall be made the subject of claim for extension of time or for excess costs or damages by the Contractor.

-- End of Section --

SECTION TABLE OF CONTENTS

DIVISION 01 - GENERAL REQUIREMENTS

SECTION 01500

TEMPORARY CONSTRUCTION FACILITIES

02/97

PART 1 GENERAL

1.1 GENERAL REQUIREMENTS
1.1.1 Site Plan
1.1.2 Identification of Employees
1.1.3 Employee Parking
1.2 AVAILABILITY AND USE OF UTILITY SERVICES
1.2.1 Payment for Utility Services
1.2.2 Meters and Temporary Connections
1.2.3 Advance Deposit
1.2.4 Final Meter Reading
1.2.5 Sanitation
1.2.6 Telephone
1.3 BULLETIN BOARD, PROJECT SIGN, AND PROJECT SAFETY SIGN
1.3.1 Bulletin Board
1.3.2 Project Signs
1.4 PROTECTION AND MAINTENANCE OF TRAFFIC
1.4.1 Haul Roads
1.4.2 Barricades
1.5 CONTRACTOR'S TEMPORARY FACILITIES
1.5.1 Administrative Field Offices
1.5.2 New Building
1.5.3 Security Provisions
1.6 OMITTED
1.7 PLANT COMMUNICATION
1.8 OMITTED
1.9 PARTNERING
1.10 INSTALLATION REGULATIONS
1.11 TESTING LABORATORIES
1.11.1 Approved Testing Laboratories
1.11.2 Other Laboratory Services
1.12 CONSTRUCTION SCHEDULE RESTRAINTS - POPE AFB, NC
1.12.1 Protection
1.12.2 Phasing and Sequence
1.12.2.1 General
1.12.2.2 Special Work Restraints
1.12.3 Outages
1.12.4 Continuity
1.12.5 Construction/Site Management for Construction on AMC Installation
1.12.5.1 General
1.12.5.2 Contractor's Temporary Facilities
1.13 REQUEST FOR INFORMATION (RFI) SYSTEM

1.14 PROGRESS PHOTOGRAPHS
1.15 CLEANUP
1.16 RESTORATION OF STORAGE AREA

PART 2 PRODUCTS (NOT APPLICABLE)

PART 3 EXECUTION (NOT APPLICABLE)

-- End of Section Table of Contents --

CEGS-01500/S (February 1997)

SECTION 01500

TEMPORARY CONSTRUCTION FACILITIES
02/97

PART 1 GENERAL

1.1 GENERAL REQUIREMENTS

1.1.1 Site Plan

The Contractor shall prepare a site plan indicating the proposed location and dimensions of any area to be fenced and used by the Contractor, the number of trailers to be used, avenues of ingress/egress to the fenced area and details of the fence installation. Any areas which may have to be graveled to prevent the tracking of mud shall also be identified. The Contractor shall also indicate if the use of a supplemental or other staging area is desired.

1.1.2 Identification of Employees

The Contractor shall be responsible for furnishing to each employee, and for requiring each employee engaged on the work to display, identification as approved and directed by the Contracting Officer. Prescribed identification shall immediately be delivered to the Contracting Officer for cancellation upon release of any employee. When required, the Contractor shall obtain and provide fingerprints of persons employed on the project. Contractor and subcontractor personnel shall wear identifying markings on hard hats clearly identifying the company for whom the employee works.

1.1.3 Employee Parking

Contractor employees shall park privately owned vehicles in an area designated by the Contracting Officer. This area will be within reasonable walking distance of the construction site. Contractor employee parking shall not interfere with existing and established parking requirements of the military installation.

1.2 AVAILABILITY AND USE OF UTILITY SERVICES

1.2.1 Payment for Utility Services

The Government will make all reasonably required utilities available to the Contractor from existing outlets and supplies, as specified in the contract. Unless otherwise provided in the contract, the amount of each utility service consumed shall be charged to or paid for by the Contractor at prevailing rates charged to the Government or, where the utility is produced by the Government, at reasonable rates determined by the Contracting Officer. The Contractor shall carefully conserve any utilities furnished without charge.

1.2.2 Meters and Temporary Connections

The Contractor, at its expense and in a manner satisfactory to the Contracting Officer, shall provide and maintain necessary temporary connections, distribution lines, and meter bases (Government will provide meters) required to measure the amount of each utility used for the purpose of determining charges. The Contractor shall notify the Contracting Officer, in writing, 5 working days before final electrical connection is desired so that a utilities contract can be established. The Government will provide a meter and make the final hot connection after inspection and approval of the Contractor's temporary wiring installation. The Contractor shall not make the final electrical connection.

1.2.3 Advance Deposit

An advance deposit for utilities consisting of an estimated month's usage or a minimum of $50.00 will be required. The last monthly bills for the fiscal year will normally be offset by the deposit and adjustments will be billed or returned as appropriate. Services to be rendered for the next fiscal year, beginning 1 October, will require a new deposit. Notification of the due date for this deposit will be mailed to the Contractor prior to the end of the current fiscal year.

1.2.4 Final Meter Reading

Before completion of the work and final acceptance of the work by the Government, the Contractor shall notify the Contracting Officer, in writing, 5 working days before termination is desired. The Government will take a final meter reading, disconnect service, and remove the meters. The Contractor shall then remove all the temporary distribution lines, meter bases, and associated paraphernalia. The Contractor shall pay all outstanding utility bills before final acceptance of the work by the Government.

1.2.5 Sanitation

The Contractor shall provide and maintain within the construction area minimum field-type sanitary facilities approved by the Contracting Officer. Government toilet facilities will not be available to Contractor's personnel.

1.2.6 Telephone

The Contractor shall make arrangements and pay all costs for telephone facilities desired.

1.3 BULLETIN BOARD, PROJECT SIGN, AND PROJECT SAFETY SIGN

1.3.1 Bulletin Board

Immediately upon beginning of work, the Contractor shall provide a weatherproof glass-covered bulletin board not less than 36 by 48 inches in size for displaying the Equal Employment Opportunity poster, a copy of the

wage decision contained in the contract, Wage Rate Information poster, and other information approved by the Contracting Officer. The bulletin board shall be located at the project site in a conspicuous place easily accessible to all employees, as approved by the Contracting Officer. Legible copies of the aforementioned data shall be displayed until work is completed. Upon completion of work the bulletin board shall be removed by and remain the property of the Contractor.

1.3.2 Project Signs

On commencement of work on this project, the Contractor shall furnish and erect the temporary sign in the location selected by the Contracting Officer near the project site. The Contractor shall maintain the sign in good condition through the project construction period. Upon completion of the project the Contractor shall remove the sign from the premises. The project sign shall conform to Standard Drawing included in Attachment 1 to Section 00800 SPECIAL CONSTRACT REQUIREMENTS.

1.4 PROTECTION AND MAINTENANCE OF TRAFFIC

During construction the Contractor shall provide access and temporary relocated roads as necessary to maintain traffic. The Contractor shall maintain and protect traffic on all affected roads during the construction period except as otherwise specifically directed by the Contracting Officer. Measures for the protection and diversion of traffic, including the provision of watchmen and flagmen, erection of barricades, placing of lights around and in front of equipment and the work, and the erection and maintenance of adequate warning, danger, and direction signs, shall be as required by the State and local authorities having jurisdiction. The traveling public shall be protected from damage to person and property. The Contractor's traffic on roads selected for hauling material to and from the site shall interfere as little as possible with public traffic. The Contractor shall investigate the adequacy of existing roads and the allowable load limit on these roads. The Contractor shall be responsible for the repair of any damage to roads caused by construction operations.

1.4.1 Haul Roads

The Contractor will be required to use the haul routes shown on the plans unless otherwise permitted in writing by the Contracting Officer. When haul routes are not designated on the plans, the Contractor must obtain approval of the Contracting Officer of haul routes he intends to use. The Contractor shall maintain the haul routes and shall keep the dust problem under control by wetting the surface as needed. Sweeping and cleaning of pavements will be done as necessary to remove spillage resulting from the hauling operations. After all hauling has been completed, the Contractor shall restore the earth areas used for the haul routes to original condition by final grading, shaping, compacting, and grassing, and shall clean and sweep all paved areas as required. Any pavement damaged as a result of hauling operations under this contract for both the earth and other materials shall be promptly repaired by the Contractor, as approved by the Contracting Officer. The cost of maintenance and repair of the haul routes, as mentioned above, shall be considered as a subsidiary obligation of the Contractor. The axle load of earth hauling equipment operating on

paved streets shall not exceed 12,000 pounds.

1.4.2 Barricades

The Contractor shall erect and maintain temporary barricades to limit public access to hazardous areas. Such barricades shall be required whenever safe public access to paved areas such as roads, parking areas or sidewalks is prevented by construction activities or as otherwise necessary to ensure the safety of both pedestrian and vehicular traffic. Barricades shall be securely placed, clearly visible with adequate illumination to provide sufficient visual warning of the hazard during both day and night.

1.5 CONTRACTOR'S TEMPORARY FACILITIES

1.5.1 Administrative Field Offices

The Contractor shall provide and maintain administrative field office facilities within the construction area at the designated site. Government office and warehouse facilities will not be available to the Contractor's personnel.

1.5.2 New Building

In the event a new building is constructed for the temporary project field office, it shall be a minimum 12 feet in width, 16 feet in length and have a minimum of 7 feet headroom. It shall be equipped with approved electrical wiring, at least one double convenience outlet and the required switches and fuses to provide 110-120 volt power. It shall be provided with a work table with stool, desk with chair, two additional chairs, and one legal size file cabinet that can be locked. The building shall be waterproof, shall be supplied with heater, shall have a minimum of two doors, electric lights, a telephone, a battery operated smoke detector alarm, a sufficient number of adjustable windows for adequate light and ventilation, and a supply of approved drinking water. Approved sanitary facilities shall be furnished. The windows and doors shall be screened and the doors provided with dead bolt type locking devices or a padlock and heavy duty hasp bolted to the door. Door hinge pins shall be non-removable. The windows shall be arranged to open and to be securely fastened from the inside. Glass panels in windows shall be protected by bars or heavy mesh screens to prevent easy access to the building through these panels. In warm weather, air conditioning capable of maintaining the office at 50 percent relative humidity and a room temperature 20 degrees F below the outside temperature when the outside temperature is 95 degrees F, shall be furnished. Any new building erected for a temporary field office shall be maintained by the Contractor during the life of the contract and upon completion and acceptance of the work shall become the property of the Contractor and shall be removed from the site. All charges for telephone service for the temporary field office shall be borne by the Contractor, including long distance charges up to a maximum of $75.00 per month.

1.5.3 Security Provisions

Adequate outside security lighting shall be provided at the Contractor's temporary facilities. The Contractor shall be responsible for the security

of its own equipment; in addition, the Contractor shall notify the appropriate law enforcement agency requesting periodic security checks of the temporary project field office.

1.6 OMITTED

1.7 PLANT COMMUNICATION

Whenever the Contractor has the individual elements of its plant so located that operation by normal voice between these elements is not satisfactory, the Contractor shall install a satisfactory means of communication, such as telephone or other suitable devices. The devices shall be made available for use by Government personnel.

1.8 OMITTED

1.9 PARTNERING

Following contract award, the Government intends to propose a voluntary partnering relationship with the Contractor. This partnering relationship will attempt to draw on strengths of each organization to facilitate communications and minimize delays to achieve a quality product, within budget, and on schedule. Participation in such partnering activities may include attendance at coordination meetings and cooperation in other efforts to promote the partnering relationship. The Government and the Contractor will each bear their own costs for participation in the partnering relationship, with no change in the contract price. Participation will not result in any change in the terms or price of the contract.

1.10 INSTALLATION REGULATIONS

The employees of the Contractor will be required to abide by all installation regulations as published by the Commanding Officer. A copy of these regulations can be obtained from the Area/Resident Engineer at the installation. All costs in connection therewith shall be included in the contract price for the work. All costs in connection therewith shall be included in the contract price for the work.

1.11 TESTING LABORATORIES

Testing is required to be performed by the Contractor as part of his Quality Control Program to verify contract compliance. This Quality Control Testing is to be conducted by a project or commercial laboratory which has been found adequate and qualified by a Corps of Engineers Division Laboratory Inspection Team.

1.11.1 Approved Testing Laboratories

A composite listing of approved testing laboratories within the Savannah District is available upon request. The Contractor should engage the services of a laboratory contained in the composite list. Contractors may obtain the list by calling (678) 354-0310. Fax requests can be made to number (678) 354-0330.

1.11.2 Other Laboratory Services

The Contractor may engage the services of a laboratory other than those approved by Corps of Engineers District Laboratory Inspection Team if they comply with the following:

a. The Contractor identifies and proposes the unapproved laboratory a minimum of 90 days prior to the start of testing. This time is necessary to allow for scheduling an inspection by a Corps of Engineers District Laboratory team. The time for Government inspection will not be the basis for an increase in the contract performance period.

b. All costs of Government inspection shall be the responsibility of the Contractor.

c. The Contractor may request Government inspection and approval prior to award by forwarding a written request to:

US Army Engineer District, Savannah
Environmental and Materials Unit
200 North Cobb Parkway
Building 400, Suite 404
Marietta, GA 30062

1.12 CONSTRUCTION SCHEDULE RESTRAINTS - POPE AFB, NC

1.12.1 Protection

Contractor is responsible to provide such covering, shields and barricades as are required to protect building occupants, equipment, stores, supplies, etc., from dust, debris, weather intrusion, water, moisture or other cause of damage resulting from construction.

1.12.2 Phasing and Sequence

1.12.2.1 General

In addition to the submittals required by clause SCHEDULES FOR CONSTRUCTION CONTRACTS (see SECTION 00700, FAR 52.236-15) the Contractor shall submit for approval a summary work schedule setting forth schedule dates for initiation and completion of construction in each work area. No work shall be performed prior to approval of this schedule and all work shall be performed in strict adherence thereto. If departures from this schedule appear to be required or desired, the Contracting Officer shall be promptly notified and his approval will be required prior to implementation of said departure(s).

1.12.2.2 Special Work Restraints

As noted on the drawings.

1.12.3 Outages

Contractor's work requiring outages of utility systems or building systems will require 2 weeks' advance notice and will be subject to the approval of the Contracting Officer. Work shall be phased such that duration of outages will be minimized. Notice shall include type of outage, date, and time outage will commence and estimated duration of outage.

1.12.4 Continuity

All tools, labor and materials required to complete any item of work within a given work area or requiring an outage of any building utility or system shall be available at the site prior to commencement thereof. Once work has commenced on an item of work, said work shall be continuously and diligently performed to completion and acceptance.

1.12.5 Construction/Site Management for Construction on AMC Installation

1.12.5.1 General

The following criteria describes the standards that must be attained on all construction sites at all Air Mobility Command bases. The criteria relates to the appearance of the construction site during the construction cycle, to temporary administration and storage areas and service facilities as needed for execution and completion of the work.

a. Storage Sites: The Contractor shall be given two sites; the primary construction site and a supplemental storage site. The supplemental storage site may not be in close proximity of the construction site but shall be at a site designated on the drawings or by the base civil engineer at the Preconstruction Conference. The primary construction site will be the location of the construction.

A visually acceptable site is required. A clean, well kept site will ensure proper compliance with the safety and environmental requirements of this contract. Contractor's trailers or storage buildings shall be painted in accordance with the base standards and be kept in a good state of repair. Failure of the Contractor to maintain the trailers or storage building in a good condition will be considered sufficient reason to require their removal. The Contractor will be responsible for the security of his property and general housekeeping of the area(s).

b. Site Plan: The Contractor shall submit to the Contracting Officer, for approval prior to the start of work, plans showing the layout and details of all temporary facilities to be used for this contract. The plan must be approved by the base civil engineer. The plan, as a minimum, shall include the location and alignment of the safety and construction fences and location of all site trailers, equipment and material storage areas, construction entrances, trash dumpsters, temporary sanitary facilities, and workers' parking areas. After completion of the work, the Contractor shall remove the facilities from the site and restore the site to the original condition.

c. Dirt/Dust Control Plan: The Contractor shall submit truck and material handling routes and a plan for controlling dirt, debris, and dust

from accumulating on base roadways the Contractor uses for any purpose. The plan, as a minimum, shall identify the subcontractor and equipment to be used for cleaning along the haul route roadways and measures to be used to reduce dirt, dust, and debris from roadways.

1.12.5.2 Contractor's Temporary Facilities

a. Administrative Field Offices and Material Storage Trailers: Contractor's administrative field office and storage trailers shall be in new or like new condition and be the base standard color on the exterior (Federal Standard Color FS-23531 or Sherwin Williams SW-1099, Knubby Wool). Trailers will include "skirts" that will prevent storage of material under the trailers. All trailers and other temporary structures used as field offices to house personnel or for storage shall be anchored to the ground in accordance with base standards.

b. Dumpsters: Dumpsters shall be equipped with a secure cover, painted Federal Standard Color FS-20059 or Sherwin Williams SW-1049, Belgian Chocolate, and be free of graffiti. The cover shall be closed at all times, except when being loaded with trash and debris. Dumpsters will be located behind the construction fence or out of the public view. Site dumpsters shall be emptied at least a once a week or as needed to keep the site free of debris and trash.

c. Trash Containers: The trash containers shall be 208 liters (55 gallons) in capacity, painted Federal Standard Color FS-20059 or Sherwin Williams 1049 and free of graffiti. The trash container will be located behind the construction fence or out of the public view. Trash containers shall be emptied at least once a day. The number of trash containers required shall be as needed to keep the site clean as determined by the Contracting Officer.

d. Temporary Sanitation Facilities: All temporary sewer/sanitation facilities shall be self-contained units with both urinals and stool capabilities. The units shall be sufficiently ventilated to control odors and fumes and should be emptied and cleaned at least a every week or more often if required by the Contracting Officer. The doors should be self-closing. The exterior of the unit shall be Federal Standard Color FS-23531 or Sherwin Williams SW-1099, Knubby Wool. The facility will be located behind the construction fence or out of the public view.

e. Construction and Safety Fence: The project work area and Contractor lay-down area shall be screened from view along Hurst Drive by a 1.8 m (6-foot) chain link fence with brown, UV light-resistant, plastic fabric mesh netting (similar to tennis court screening) and gates. Upon completion and acceptance of the work, the construction fence shall be removed. Chain link fencing and gates shall be installed in accordance with manufacturer's recommendations.

f. Grass Cutting: Any grass (or annual grass) within the construction and storage sites shall be cut to a 2-inch height at least once a week during the growing season. The grass around the fences shall be trimmed at time of grass cutting to keep a neat appearance. If a construction or safety fence is not used for a specific reason approved by the base civil

engineering representative then any grass or annual weeds within the construction area shall be maintained in a similar fashion as previously described. Grass or weeds growing on stockpiled earth shall be maintained as described above.

1.13 REQUEST FOR INFORMATION (RFI) SYSTEM

The Government has developed an electronic database, the Request for Information (RFI) System, to track and answer Contractor questions, requests for information and clarifications during construction. The use of the RFI System for all requests (the Contractor's as well as the subcontractors'/suppliers') is a contractual requirement for this project. The Contractor will enter the system over the Internet using a WEB browser such as Internet Explorer 5.0 or newer or Netscape 4.7 or newer and any Internet service provider. The Government will provide the Contractor a user identification and password for the system that will only allow the Contractor to enter and view the requests for this project. The Contractor will provide the Government the E-mail address for the individual(s) inputting into the system in order that E-mail messages can be sent from the Government to the Contractor indicating a response to the request. The Government will provide instructions in the use of the RFI system. The Contractor must fill in seven fields in the Contractor Data portion of the RFI form, which include Date Required, Priority, Short Description, Problem Description, Recommended Action, Cost, and Time. The Government will be notified through an E-mail message that the Contractor has entered a request into the system. When the Government has answered the request, an E-mail message will be sent informing the Contractor that the answer to the request is in the system. The Contractor will enter the system to retrieve the answer using the same procedure to enter the question. The RFI System assigns a unique number to each request. The Contractor will not be reimbursed separately for the required use of this system. The Contractor shall include any costs associated with the use of this system into their bid.

1.14 PROGRESS PHOTOGRAPHS

The Contractor shall, during the progress of the project, furnish the Contracting Officer progress photographs and color slides to depict progress of construction. The photographic work shall be performed by a qualified, established, commercial photographer. The photographs and slides shall be taken between the 1st and 5th day of each month and be delivered to the Contracting Officer not later than the 20th day of the same month taken. The photographs and slides shall be taken from not less than six positions for each month as selected by the Contracting Officer. They shall show, inasmuch as practicable, work accomplished during the previous month. The photographs shall be 8-inch by 10-inch color glossy prints and the slides 35 millimeter color slides. Each photograph shall be identified showing date made, contract title and number and a brief description of work depicted and shall be sequentially numbered. The identifying data shall be placed on the back of the prints. Slides shall have a number placed on the frame corresponding to the appropriate identified print, the name of the project, the date and a brief description of work depicted. No identifying data shall appear on the face of prints or in the viewing area of slides. One copy of each photograph and the

corresponding negative and slide shall be furnished to the Contracting Officer by the time stipulated above. No separate payment will be made for these services and all costs in connection therewith shall be considered incidental to costs of the overall project.

1.15 CLEANUP

Construction debris, waste materials, packaging material and the like shall be removed from the work site daily. Any dirt or mud which is tracked onto paved or surfaced roadways shall be cleaned away. Materials resulting from demolition activities which are salvageable shall be stored within the fenced area described above or at the supplemental storage area. Stored material not in trailers, whether new or salvaged, shall be neatly stacked when stored.

1.16 RESTORATION OF STORAGE AREA

Upon completion of the project and after removal of trailers, materials, and equipment from within the fenced area, the fence shall be removed and will become the property of the Contractor. Areas used by the Contractor for the storage of equipment or material, or other use, shall be restored to the original or better condition. Gravel used to traverse grassed areas shall be removed and the area restored to its original condition, including top soil and seeding as necessary.

PART 2 PRODUCTS (NOT APPLICABLE)

PART 3 EXECUTION (NOT APPLICABLE)

-- End of Section --

SECTION TABLE OF CONTENTS

DIVISION 01 - GENERAL REQUIREMENTS

SECTION 01670

RECYCLED / RECOVERED MATERIALS

12/01

PART 1 GENERAL

1.1 REFERENCES
1.2 OBJECTIVES
1.3 EPA DESIGNATED ITEMS INCORPORATED IN THE WORK
1.4 EPA PROPOSED ITEMS INCORPORATED IN THE WORK
1.5 EPA LISTED ITEMS USED IN CONDUCT OF THE WORK BUT NOT INCORPORATED IN THE WORK

-- End of Section Table of Contents --

SECTION 01670

RECYCLED / RECOVERED MATERIALS

12/01

PART 1 GENERAL

1.1 REFERENCES

The publications listed below form a part of this specification to the extent referenced. The publications are referred to in the text by basic designation only.

U.S. NATIONAL ARCHIVES AND RECORDS ADMINISTRATION (NARA)

40 CFR 247	Comprehensive Procurement Guideline for Products Containing Recovered Materials

1.2 OBJECTIVES

Government procurement policy is to acquire, in a cost effective manner, items containing the highest percentage of recycled and recovered materials practicable consistent with maintaining a satisfactory level of competition without adversely affecting performance requirements or exposing suppliers' employees to undue hazards from the recovered materials. The Environmental Protection Agency (EPA) has designated certain items which must contain a specified percent range of recovered or recycled materials. EPA designated products specified in this contract comply with the stated policy and with the EPA guidelines. The Contractor shall make all reasonable efforts to use recycled and recovered materials in providing the EPA designated products and in otherwise utilizing recycled and recovered materials in the execution of the work.

1.3 EPA DESIGNATED ITEMS INCORPORATED IN THE WORK

Various sections of the specifications contain requirements for materials that have been designated by EPA as being products which are or can be made with recovered or recycled materials. These items, when incorporated into the work under this contract, shall contain at least the specified percentage of recycled or recovered materials unless adequate justification (non-availability) for non-use is provided. When a designated item is specified as an option to a non-designated item, the designated item requirements apply only if the designated item is used in the work.

1.4 EPA PROPOSED ITEMS INCORPORATED IN THE WORK

Products other than those designated by EPA are still being researched and are being considered for future Comprehensive Procurement Guideline (CPG) designation. It is recommended that these items, when incorporated in the work under this contract, contain the highest practicable percentage of recycled or recovered materials, provided specified requirements are also met.

1.5 EPA LISTED ITEMS USED IN CONDUCT OF THE WORK BUT NOT INCORPORATED IN THE WORK

There are many products listed in 40 CFR 247 which have been designated or proposed by EPA to include recycled or recovered materials that may be used by the Contractor in performing the work but will not be incorporated into the work. These products include office products, temporary traffic control

products, and pallets. It is recommended that these non-construction products, when used in the conduct of the work, contain the highest practicable percentage of recycled or recovered materials and that these products be recycled when no longer needed.

-- End of Section --

SECTION TABLE OF CONTENTS

DIVISION 01 - GENERAL REQUIREMENTS

SECTION 01730

OPERATION AND MAINTENANCE SUPPORT INFORMATION (OMSI)

12/98

PART 1 GENERAL

1.1 SUBMITTALS
1.1.1 OMSI Submittal Requirements

PART 2 PRODUCTS

2.1 DEVELOPMENT OF SUBMITTALS
2.2 IDENTIFICATION

PART 3 EXECUTION

3.1 OPERATING INSTRUCTIONS
3.1.1 Safety
3.1.2 Operator Prestart
3.1.3 Starting and Shutdown Procedures and Controls
3.1.4 Normal Operating Instructions
3.1.5 Emergency Operating Procedures
3.1.6 Operator Service Requirements
3.1.7 Instruction to Government Personnel
3.2 MAINTENANCE, SERVICE AND REPAIR INSTRUCTIONS
3.2.1 Lubrication Instructions
3.2.2 Table of Preventative Maintenance Instructions
3.2.3 Preventative Maintenance Inspection
3.2.4 Troubleshooting Guides and Diagnostic Techniques
3.2.5 Removal and Preplacement Instructions
3.2.6 Maintenance and Repair Procedure
3.3 PARTS MANUAL
3.3.1 Contents
3.3.2 Illustrations, Drawings, and/or Exploded Views
3.3.3 End Item Manufacturer's Part Numbers
3.3.4 Components Assemblies/Parts
3.3.5 Appendices
3.4 VALIDATION
3.5 SPECIFIC EQUIPMENT SUBMITTALS
3.5.1 Pressure Gages
3.5.2 Automatic Pump Controls
3.5.3 Meters
3.5.4 Product Recovery Tank and Accessories
3.5.5 High Point Vent and Low Point Drain Pits
3.5.6 Operating Tank Level Indicator
3.5.7 Piping and Fittings
3.5.8 Manual Valves
3.5.9 Gaskets and Isolating Gasket Kits
3.5.10 Strainers
3.5.11 Protective Coatings
3.5.12 Sample Connections
3.5.13 Filter Separators
3.5.14 Pumps - Fueling, Offload, Fuel Transfer, Water Draw-off
3.5.15 Control Valves

3.5.16 Engine-Generator
3.5.17 Fire Alarm and Fire Detecting System
3.5.18 Motor Control Center
3.5.19 Non-Automatic Transfer Switch
3.5.20 Pump Control Panel (PCP)

-- End of Section Table of Contents --

SECTION 01730

OPERATION AND MAINTENANCE SUPPORT INFORMATION (OMSI)
12/98

PART 1 GENERAL

1.1 SUBMITTALS

1.1.1 OMSI Submittal Requirements

OMSI submittals are required in order that complete documentation can be assembled to provide the Government "Activity" with the necessary information and orientation to adequately operate and maintain the new structures/facilities of this project. The Contractor shall submit the OMSI documents and information specified for the equipment listed under the OMSI submittal paragraphs in each technical section. Five (5) copies of each OMSI submittal shall be forwarded to the Contracting Officer no later than 120-days prior to contract completion. OMSI submittals are to be submitted separate from and in addition to Contractor's product approval submittals.

SD-10 Operation and Maintenance Data

Manuals; G-AE

PART 2 PRODUCTS

2.1 DEVELOPMENT OF SUBMITTALS

Provide submittals in separate folders consistent with the Contractor's standard practice. Manufacturer's manuals or data for the components, assemblies, subassemblies, and other operating parts which are provided shall be assembled into a loose-leaf notebook-type folder, indexed by major assembly and component in sequential order. Manuals shall be complete in all respects for all equipment, controls, and accessories provided.

2.2 IDENTIFICATION

On each folder identify and mark as follows:

a. Inscribe on the cover, the words, "OPERATION AND MAINTENANCE MANUAL", the name and location of the building, and the contract number.

b. Equipment manufacturer and/or Contractor' s address and telephone number; names, address and telephone numbers of each subcontractor installing equipment; and local representative for each item of equipment.

c. Volume number and title of the folder.

d. The manual shall have a table of contents and be assembled to conform to the table of contents with the tab sheets placed before instructions covering the subject. Sub-divide manuals or provide separate manuals for each of the following categories.

(1) Operating Instructions
(2) Maintenance, Service, and Repair Instructions
(3) Parts Manual

PART 3 EXECUTION

3.1 OPERATING INSTRUCTIONS

The operator's instructions shall include specific instructions and illustrations of the equipment operation required or recommended by the manufacturer as follows:

3.1.1 Safety

Include manufacturer's safety precautions to be observed while operating under all conditions for which the equipment was designed. Clearly list all major hazards to personnel and equipment safety that are peculiar to systems and equipment described in the manual.

3.1.2 Operator Prestart

Include instructions for prestart checks, lubrication, and service requirements necessary for setting up or preparing each system for use, warm up procedures, and verification of normal operation. Include control diagrams with data to explain detailed operation and control of each item of the equipment.

3.1.3 Starting and Shutdown Procedures and Controls

Include a control sequence describing start up operation and provide shutdown procedures and post-shutdown requirements.

3.1.4 Normal Operating Instructions

Instructions shall be sufficient to enable the mechanic to adjust, stop and start, and operate the equipment properly. Special startup precautions shall be noted, as well as other items requiring action before the equipment may be put into service. Include detailed drawings indicating procedure and valve numbers and status as to normally open/closed.

3.1.5 Emergency Operating Procedures

Include action to be taken in the event of a malfunction of the unit, either to permit a short period of continued operation or to prevent further damage to the unit and to the system in which it is installed.

3.1.6 Operator Service Requirements

Include instructions for operator service requirements during operation of the equipment.

3.1.7 Instruction to Government Personnel

The Contractor shall furnish the services of competent instructors who will give full instruction to the designated personnel in the adjustment, operation and maintenance, including pertinent safety requirements, of the equipment or system specified. Each instructor shall be thoroughly familiar with all parts of the installation and shall be trained in operating theory as well as practical operation and maintenance work. Instruction shall be given during the first regular work week after the equipment or system has been accepted and turned over to the Government for regular operation. A minimum of 1 man-day (8-hours) of instruction shall be furnished for each system specified in other sections. When more than 4 man-days of instruction are specified, approximately half of the time shall be used for classroom instruction. All other time shall be used for instruction with the equipment or system. When significant changes or modifications in the equipment or system are made under the terms of the contract, additional instruction shall be provided to acquaint the operating personnel with the changes or modifications. Government representatives shall be allowed to video tape all classroom and field instructions.

3.2 MAINTENANCE, SERVICE AND REPAIR INSTRUCTIONS

The shop or maintenance manual shall include manufacturer's instructions to maintain the equipment in a safe and serviceable condition. The maintenance or shop manual shall contain all necessary instructions, illustrations, charges and diagrams covering, as a minimum, the items listed below.

3.2.1 Lubrication Instructions

a. Include a table showing recommended lubricants for specific temperature ranges and applications.

b. Include chart(s) with schematic diagram of the equipment showing lubrication points, recommended types and grades of lubricants, and capacities. Provide a lubrication schedule showing service interval frequency.

3.2.2 Table of Preventative Maintenance Instructions

Include frequency in time, miles or hours covering routine servicing, lubrication, and adjustments.

3.2.3 Preventative Maintenance Inspection

Points and checklist should be clearly spelled out as part of operator-type inspection in this section. Include chart with schematic diagram and/or a separate inspection checklist - indicating what should be examined for wear or possible malfunction and what should be reported for repair.

3.2.4 Troubleshooting Guides and Diagnostic Techniques

Provide step-by-step procedures to enable prompt isolation of the cause of a malfunction with corrective maintenance instructions. Instructions shall clearly indicate why the check out is performed and what conditions are to be sought.

3.2.5 Removal and Preplacement Instructions

Provide step-by-step procedures for removal, replacement, disassembly and assembly of all components, assemblies, sub-assemblies, accessories, and attachments normally subjected to wear, damage, malfunction, and frequent replacement. These instructions should provide for a judicious combination of text and illustrations.

3.2.6 Maintenance and Repair Procedure

Provide instructions for tolerances, dimensions, settings, and adjustments normally required for performing routine maintenance servicing. Instructions shall provide the necessary information to bring equipment up to the required serviceable standard when it becomes unserviceable. Include instructions for examining equipment for needed repairs and adjustment, and any tests or inspections required to determine whether or not parts must be replaced.

3.3 PARTS MANUAL

3.3.1 Contents

The parts manual shall provide positive identification and coverage for all of the parts of components, assemblies, sub-assemblies, and accessories of the end item normally subject to wear, malfunctioning, damage, or loss. Include any special hardware requirements (eg., high-strength bolts and nuts). The parts manual may cover more than one model or series or equipments, components,

assemblies, subassemblies, attachments, or accessories, such as a master parts catalog, in accordance with the manufacturer's standard commercial practice. Identification of the parts shall be such that all parts may be ordered and centrally stocked by the government without further identification to the make, model, and serial number of the equipment being provided.

3.3.2 Illustrations, Drawings, and/or Exploded Views

Provide clear and legible illustrations, drawings, and/or views to enable easy identification of all individual parts, components, assemblies, sub-assemblies, and accessories of the end item. Show part numbers and description on illustrations or list separately. When the illustrations omit the part numbers and description, both the illustrations and separate listing shall show the index, the illustrations and separate listing shall show the index, reference, or key number which will cross-reference the illustrated part to listed part. Parts shown in the listings shall be grouped by components, assemblies, and sub-assemblies with individual parts identified to the assembly.

3.3.3 End Item Manufacturer's Part Numbers

Include parts for which the end item manufacturer has proprietary rights or has exercised design control, and for which the end item manufacturer is the logical supplier. The end item manufacturer shall also assign numbers to purchased production parts, if such parts are altered to meet the prime manufacturer's design configuration. (Repainting, marking, or other nonsignificant operations are not adequate cause for use of exclusively assigned numbers).

3.3.4 Components Assemblies/Parts

Include those components assemblies/parts purchased by the end item manufacturer for which the end item manufacturer does not have control, and shall be identified by the actual manufacturer's name and part numbers. Detail parts in the manufacturer's assembly, as well as attaching parts, for which the manufacturer does not have design control shall also be identified by the applicable actual manufacturer's parts numbers. This paragraph does not restrict the end item manufacturer from assigning part numbers as long as the actual manufacturer's part number and the Federal Supply Code for Manufacturer H4-1 (FSCM) or manufacturer is shown.

3.3.5 Appendices

End item manufacturer may add an appendix for cross-reference to implement components assemblies/parts requirements when implementation in manual form varies drastically with the style, format, and method of Contractor's standard commercial practice. Subject cross-referenced in an appendix will appear in the following format:

End Item Manufacturer's Alpha Numeric Seq.	Actual Manufacturer's Name and/or FSCM* From H4.1~	Actual Manufacturer Part No.
100001	John Doe & Co. 000000	2000002

*Federal Supply Code for Manufacturers Cataloging Handbook, Name to Code

3.4 VALIDATION

Each submittal shall be validated by the Contractor or Manufacturer as being accurate and applicable to the systems and equipment provided.

3.5 SPECIFIC EQUIPMENT SUBMITTALS

The technical sections of this specification identify the specific equipment or systems for which OMSI submittals are required. This paragraph' and its subparagraph contain a general list of various types of equipment and systems together with the OMSI information required for each type. The applicable OMSI information contained in this paragraph shall be submitted for each specific piece of equipment or system listed under the "OMSI Submittals" paragraph in the technical sections. Operating instructions; maintenance, service, and repair instructions; and parts manuals shall conform to the requirements of their -respective paragraph herein. Provide validation in accordance with Paragraph: VALIDATION for all submittals.

3.5.1 Pressure Gages

a. Manufacturer's descriptive literature, general.

b. Parts manuals and recommended spare parts list.

c. Maintenance, service and repair instructions.

d. Manufacturer's name, model number, serial number, Federal Stock Number (if any).

3.5.2 Automatic Pump Controls

Includes Pressure Indicating Transmitters, Flow Switches, Venturi Tubes, Differential Pressure Transmitters.

a. Manufacturer's descriptive literature, general.

b. Parts manual.

c. Maintenance, service and repair instructions.

d. Operating Instructions.

e. Manufacturer's name, model number, serial number, Federal Stock Number (if any).

f. Performance data at specified conditions.

g. Control wiring diagrams showing all terminations of conductors (and all control devices) labeled to permit identification in the field; part numbers of all control devices; normally open or normally `closed; voltage of all control `components.

h. Name, address and telephone number of the nearest manufacturer's representative.

3.5.3 Meters

a. Manufacturer's descriptive literature, general.

b. Parts manual and recommended spare parts list.

c. Maintenance, service and repair instructions.

d. Operating Instructions.

e. Manufacturer's name, model number, serial number, Federal Stock Number (if any).

f. Performance data at specified conditions.

g. Name, address and telephone number of the nearest manufacturer's representative.

3.5.4 Product Recovery Tank and Accessories

a. Manufacturer's descriptive literature, general.

b. Parts manual and recommended spare parts list.

c. Maintenance, service and repair instructions.

d. Operating Instructions.

e. Manufacturer's name, model number, serial number, Federal Stock Number (if any).

f. Performance data at specified conditions.

g. Name, address and telephone number of the nearest manufacturer's representative.

3.5.5 High Point Vent and Low Point Drain Pits

a. Manufacturer's descriptive literature, general.

b. Parts manual and recommended spare parts list.

c. Maintenance, service and repair instructions.

d. Manufacturer's name, model number, serial number, Federal Stock Number (if any).

e. Name, address and telephone number of the nearest manufacturer's representative.

3.5.6 Operating Tank Level Indicator

a. Manufacturer's descriptive literature, general.

b. Parts manual and recommended spare parts list.

c. Maintenance, service and repair instructions.

d. Operating Instructions.

e. Manufacturer's name, model number, serial number, Federal Stock Number (if any).

f. Performance data at specified conditions.

g. Control wiring diagrams showing all terminations of conductors (and all control devices) labeled to permit identification in the field; part numbers of all control devices; normalcy open or normally closed; voltage of all control components.

h. Name, address and telephone number of the nearest manufacturer's representative.

3.5.7 Piping and Fittings

a. Certificates of Compliance.

b. Batch run numbers.

c. Manufacturer's descriptive literature, general.

d. Name address and telephone number of manufacturer.

3.5.8 Manual Valves

a. Manufacturer's descriptive literature, general.

b. Parts manual and recommended spare parts list.

c. Maintenance, service and repair instructions.

d. Operating Instructions.

e. Manufacturer's name, model number, serial number, Federal Stock Number (if any).

f. Performance data at specified conditions.

g. Where specified to have limit switches, control wiring diagrams showing all terminations of conductors (and all control devices) labeled to permit identification in the field; part numbers of all control devices; normally open or normally closed; voltage of all control components.

h. Name, address and telephone number of the nearest manufacturer's representative.

3.5.9 Gaskets and Isolating Gasket Kits

a. Manufacturer's descriptive literature, general.

b. Manufacturer's name, model number, serial number, Federal Stock Number (if any).

c. Name, address and telephone number of the nearest manufacturer's representative.

3.5.10 Strainers

a. Manufacturer's descriptive literature, general.

b. Parts manual and recommended spare parts list.

c. Maintenance, service and repair instructions.

d. Manufacturer's name, model number, serial number, Federal Stock Number (if any).

e. Name, address and telephone number of the nearest manufacturer's representative.

3.5.11 Protective Coatings

a. Manufacturer's descriptive literature, general.

b. Maintenance, service and repair instructions.

c. Manufacturer's name, model number, serial number, Federal Stock Number (if any).

d. Name, address and telephone number of the nearest manufacturer's

representative.

3.5.12 Sample Connections

a. Manufacturer's descriptive literature, general.

b. Parts manual and recommended spare parts list.

c. Maintenance, service and repair instructions.

d. Operating Instructions.

e. Manufacturer's name, model number, serial number, Federal Stock Number (if any).

f. Name, address and telephone number of the nearest manufacturer's representative.

3.5.13 Filter Separators

a. Manufacturer's descriptive literature, general.

b. Parts manual and recommended spare parts list.

c. Maintenance, service and repair instructions.

d. Operating Instructions.

e. Manufacturer's name, model number, serial number, Federal Stock Number (if any).

f. Performance data at specifies conditions.

g. Name, address and telephone number of the nearest manufacturer's representative.

3.5.14 Pumps - Fueling, Offload, Fuel Transfer, Water Draw-off

a. Manufacturer's descriptive literature, general.

b. Parts manual and recommended spare parts list.

c. Maintenance, service and repair instructions:

d. Manufacturer's name, model number, serial number, Federal Stock Number (if any).

e. Performance data at specified flow rates. Performance shall include:

(1) Head developed, horsepower required and efficiency.

(2) Pump curves, flow and power requirements, efficiency, head and operating speed. Curves to show operating points at full range of operating conditions.

f. Control wiring diagrams showing all terminations of conductors (and all control devices) labeled to permit identification in the field; part numbers of all control devices; normally open or normally closed; voltage of all control components and operational description.

g. Plan and elevation views of equipment showing clearance required for maintenance and/or replacement.

h. Name, address and telephone number of the nearest manufacturer's representative.

i. Shipping and operating weights.

j. Operating instructions.

k. Factory run test curves indicating flow, head rpm, vibration amplitude and BHP.

3.5.15 Control Valves

(Submit for each type control valve specified)

a. Manufacturer's descriptive literature, general.

b. Operational description of valve and control pilots.

c. Description of valve assembly complete with parts list.

d. Recommended spare parts list for main valve and pilot control systems.

e. Instructions for trouble shooting.

f. Maintenance, service and repair instructions.

g. Manufacturer's name, model number and stock number.

h. Operational Test Data.

3.5.16 Engine-Generator

a. Internal and interconnecting wiring and control diagrams with data to explain detailed operation and control of the system or equipment.

b. A control sequence describing startup', operation, and shutdown.

c. Description of the function of each principal item of equipment.

d. Installation and maintenance instructions.

e. Safety precautions.

f. Diagrams and illustrations.

g. Testing methods.

h. Performance data.

i. Lubrication schedule including type, grade, temperature range, and frequence.

j. Parts list: The list shall indicate sources of supply, recommended spare parts, and name of servicing organization'.

k. List qualified permanent servicing organizations for support of the equipment, including addresses and certified qualifications.

3.5.17 Fire Alarm and Fire Detecting System

a. Manufacturer's descriptive literature, general.

b. Parts manual.

c. Maintenance, service and repair instructions.

d. Operating Instructions.

e. Drawing of component arrangement, schedule of components with sizes, types, and ratings, and wiring diagrams.

f. Manufacturer's name, model number, serial number, Federal Stock Number (if any).

g. Name, address and telephone number of the nearest manufacturer's representative.

3.5.18 Motor Control Center

a. Internal and interconnecting wiring and control diagrams with data to explain detailed operation and control of the system or equipment.

b. A control sequence describing startup, operation, and shutdown.

c. Description of the function of each principal item of equipment.

d. Installation and maintenance instructions.

e. Safety precautions.

f. Diagrams and illustrations.

g. Parts list.

h. Drawing of component arrangement, schedule of components with sizes, types, and ratings.

i. Manufacturer's name, model number, serial number.

j. Name, address and telephone number of the nearest manufacturer's representative.

3.5.19 Non-Automatic Transfer Switch

a. Manufacturer's descriptive literature, general.

b. Parts list.

c. Maintenance, service and repair instructions.

d. Operating Instructions.

e. Drawing of component arrangement, schedule of components with sizes, types, and ratings, and wiring diagrams.

f. Manufacturer's name, model number, serial number, Federal Stock Number (if any).

g. Name, address and telephone number of the nearest manufacturer's representative.

3.5.20 Pump Control Panel (PCP)

a. General description and specifications.

b. Comprehensive discussion of both hardware and operating program.

c. Installation and initial checkout procedures.

d. Detailed electrical and logical description.

e. Complete troubleshooting procedures, diagrams, and guidelines.

f. Complete alignment and calibration procedures for components.

g. Preventive maintenance requirements.

h. Detailed system schematics, system field assembly drawings, and system component specifications and dimensions.

i. Complete spare parts lists.

j. Interface requirements and capabilities.

k. Signal identification and timing diagrams.

l. Complete as-built bill of materials, control drawings, schedules, and sequence of operations.

m. Safety precautions.

n. Control sequence describing start-up, operation, and shutdown. Control sequence shall be integrated with startup and operation of the motor control center.

o. Part list which-shall indicate sources of supply, recommended spare parts, and name of servicing organization.

p. Manufacturer's name, address, and telephone number.

-- End of Section --

SECTION TABLE OF CONTENTS

DIVISION 01 - GENERAL REQUIREMENTS

SECTION 01731

GENERAL REQUIREMENTS

03/99; Rev. 12/00

PART 1 GENERAL

1.1 SUBMITTALS
1.1.1 Shop Drawings
1.1.2 Manufacturer's Data
1.1.3 Standards Compliance
1.1.4 Manufacturer's Installation Instructions
1.2 STANDARD PRODUCTS/SERVICE AVAILABILITY
1.2.1 Materials and Equipment
1.2.2 Experience Required
1.2.3 Alternative Service Record
1.2.4 Service Support
1.2.5 Manufacturer's Nameplate

PART 2 PRODUCTS (Not Applicable)

PART 3 EXECUTION (Not Applicable)

-- End of Section Table of Contents --

SECTION 01731

GENERAL REQUIREMENTS
03/99; Rev. 12/00

PART 1 GENERAL

1.1 SUBMITTALS

Provide submittals as specified in each individual section and obtain approval before procurement, fabrication, or delivery to the job site. Partial submittals are not acceptable and will be returned without review. Submittals shall include the manufacturer's name, trade name, catalog model or number, nameplate data, size, layout dimensions, capacity, project specification and paragraph reference, applicable Federal, Military, industry, and technical society publication references, years of satisfactory service, and other information necessary to establish contract compliance of each item the Contractor proposes to provide. Photographs of existing installations and data submitted in lieu of catalog data are not acceptable and will be returned without approval.

1.1.1 Shop Drawings

Drawings shall be a minimum of 11 inches by 17 inches in size, with a-minimum scale of 1/8 inch per foot, except as specified otherwise. Drawings shall include floor plans, sectional views, wiring diagrams, and installation details of equipment; and equipment spaces identifying and indicating proposed location, layout and arrangement of items of equipment, control panels, accessories, piping, ductwork, and other items that must be shown to assure a coordinated installation. Wiring diagrams shall identify circuit terminals, and indicate the internal wiring for each item of equipment and the interconnection between each item of equipment. Drawings shall indicate adequate clearance for operation, maintenance, and replacement of operating equipment devices. If equipment is disapproved, drawings shall be revised to show acceptable equipment and be resubmitted. (Prior to the completion of the contract, on 29x41 mylar reproducible for each system wiring/control diagram and each approved system layout drawing shall be provided to the Contracting Officer with the operation and maintenance manuals specified herein).

1.1.2 Manufacturer's Data

Submittals for each manufactured item shall be manufacturer's descriptive literature of cataloged products, equipment drawings, diagrams, performance and characteristic curves, and catalog cuts.

1.1.3 Standards Compliance

When materials or equipment must conform to the standards of organizations such as the American National Standards Institute (ANSI), American Society for Testing and Materials (ASTM), National Electrical Manufacturers Association (NEMA), American Society of Mechanical Engineers (ASME), American Gas Association (AGA), American Petroleum Institute (API), American Refrigeration Institute (ARI), and Underwriters Laboratories (UL) or equivalent, proof of such conformance shall be submitted to the Contracting Officer for approval. Factory Mutual (FM) listing or Canadian Standards Association (CSA) listing will be acceptable in lieu of any UL listing requirements. If an organization uses a label or listing to indicate compliance with a particular standard, the label or listing will be acceptable evidence, unless otherwise specified in the individual sections. In lieu of the label or listing, the Contractor shall submit a certificate from an independent testing organization, which is

competent to perform acceptable test and is approved by the Contracting Officer. The certificate shall state that the item has been tested in accordance with the specified organization's test methods and that the item conforms to the specified organization's standard. For materials and equipment whose compliance with organizational - standards or specifications is not regulated by an organization using its own listing or label as proof of compliance, a certificate of compliance from the manufacturer shall be submitted for approval. The certificate shall identify the manufacturer, the product, and the referenced standard and shall simply state that the manufacturer certifies that the product conforms to all requirements of the project specification and of the referenced standards listed.

1.1.4 Manufacturer's Installation Instructions

Where installation procedures or any part thereof are required to be in accordance with the recommendations of the manufacturer of the material being installed, printed copies of these recommendations shall be furnished prior to installation. Installation of the item will not be allowed to proceed until the recommendations are received. Failure to furnish these recommendations can be cause for rejection of the material.

1.2 STANDARD PRODUCTS/SERVICE AVAILABILITY

1.2.1 Materials and Equipment

Materials and equipment shall be standard products of a manufacturer regularly engaged in the manufacturer of such products, which are of a similar material, design and workmanship. The standard products shall have been in satisfactory commercial or industrial use for two years prior to bid opening. The two-year use shall include applications of equipment and materials under similar circumstances and of similar size.

1.2.2 Experience Required

The two-year experience requirement must be satisfactorily completed for a product which has been sold or is offered for sale on the commercial market through advertisements, manufacturer's catalogs, or brochures.

1.2.3 Alternative Service Record

Products having less than a two-year field service record will be acceptable if a certified record of satisfactory field operation for not less than 6000 hours, exclusive of the manufacturer's factory or laboratory test, can be shown.

1.2.4 Service Support

The equipment items shall be supported by service organizations. The Contractor shall submit a certified list of qualified permanent service organizations for support of the equipment which includes their addresses and qualifications. These service organizations shall be reasonably convenient to the equipment installation and able to render satisfactory service to the equipment on a regular and emergency basis during the warranty period of the contract.

1.2.5 Manufacturer's Nameplate

Each item of equipment shall have a nameplate bearing the manufacturer's name, address, model number, and serial number securely affixed in a conspicuous place; the nameplate of the distributing agent will not be acceptable.

PART 2 PRODUCTS (Not Applicable)

PART 3 EXECUTION (Not Applicable)

-- End of Section --

SECTION TABLE OF CONTENTS

DIVISION 01 - GENERAL REQUIREMENTS

SECTION 01780

AS-BUILT DRAWINGS SUBMITTALS

01/99

PART 1 GENERAL

1.1 OMITTED
1.2 SUBMITTALS
1.3 PROJECT RECORD DOCUMENTS
1.3.1 As-Built Drawings
1.3.1.1 Government Furnished Materials
1.3.1.2 Working As-Built and Final As-Built Drawings
1.3.1.3 Drawing Preparation
1.3.1.4 Computer Aided Design and Drafting (CADD) Drawings
1.3.1.5 Omitted
1.3.1.6 Payment

PART 2 PRODUCTS (NOT USED)

PART 3 EXECUTION (NOT USED)

-- End of Section Table of Contents --

CEGS-01780 (January 1999)

SECTION 01780

AS-BUILT DRAWINGS SUBMITTALS
01/99

PART 1 GENERAL

1.1 OMITTED

1.2 SUBMITTALS

Government approval is required for submittals with a "G" designation; submittals not having a "G" designation are for information only. When used, a designation following the "G" designation identifies the office that will review the submittal for the Government. The following shall be submitted in accordance with Section 01330 SUBMITTAL PROCEDURES:

SD-02 Shop Drawings

As-Built Drawings; G-RE

Drawings showing final as-built conditions of the project. The CADD drawings shall consist of two sets of completed final as-built drawings on separate media. One set of media shall be CADD drawing files. The other set of media shall consist of one set of mylars, two sets of blue line prints of the mylars, and the approved marked working as-built prints.

SD-03 Product Data

As-Built Record of Equipment and Materials; G-RE

Two copies of the record listing the as-built materials and equipment incorporated into the construction of the project.

1.3 PROJECT RECORD DOCUMENTS

1.3.1 As-Built Drawings

This paragraph covers as-built drawings complete, as a requirement of the contract. The terms "drawings," "contract drawings," "drawing files," "working as-built drawings" and "final as-built drawings" refer to contract drawings which are revised to be used for final as-built drawings.

1.3.1.1 Government Furnished Materials

One set of electronic CADD files in the specified software and format revised to reflect all bid amendments will be provided by the Government at the preconstruction conference for projects requiring CADD file as-built drawings.

1.3.1.2 Working As-Built and Final As-Built Drawings

The Contractor shall revise two sets of paper drawings by red-line process to show the as-built conditions during the prosecution of the project. These working as-built marked drawings shall be kept current on a weekly basis and available on the job site at all times. Changes from the contract plans which are made in the work or additional information which might be uncovered in the course of construction shall be accurately and neatly recorded as they occur by means of details and notes. Final as-built drawings shall be prepared after the completion of specific phases of work (foundations, utilities, structural

steel, etc., as appropriate for the project). The working as-built marked prints and final as-built drawings will be jointly reviewed for accuracy and completeness by the Contracting Officer and the Contractor prior to incremental submission of each monthly pay estimate. If the Contractor fails to maintain the working and finalas-built drawings as specified herein, the Contracting Officer will deduct from the monthly progress payment an amount representing the estimated cost of maintaining the as-built drawings. This monthly deduction will continue until an agreement can be reached between the Contracting Officer and the Contractor regarding the accuracy and completeness of updated drawings. Noncompliance with regard to maintaining as-built drawings will be consideration for an interim unsatisfactory Contractor performance evaluation. The working and final as-built drawings shall show the following information, but not be limited thereto:

a. The actual location, kinds and sizes of all sub-surface utility lines. In order that the location of these lines and appurtenances may be determined in the event the surface openings or indicators become covered over or obscured, the as-built drawings shall show, by offset dimensions to two permanently fixed surface features, the end of each run including each change in direction. Valves, splice boxes and similar appurtenances shall be located by dimensioning along the utility run from a reference point. The average depth below the surface of each run shall also be recorded.

b. The location and dimensions of any changes within the building structure.

c. Correct grade, elevations, cross section, or alignment of roads, earthwork, structures or utilities if any changes were made from contract plans.

d. Changes in details of design or additional information obtained from working drawings specified to be prepared and/or furnished by the Contractor; including but not limited to fabrication, erection, installation plans and placing details, pipe sizes, insulation material, dimensions of equipment foundations, etc.

e. The topography, invert elevations and grades of drainage installed or affected as part of the project construction.

f. Changes or modifications which result from the final inspection.

g. Where contract drawings or specifications present options, only the option selected for construction shall be shown on the final as-built prints.

h. If borrow material for this project is from sources on Government property, or if Government property is used as a spoil area, the Contractor shall furnish a contour map of the final borrow pit/spoil area elevations.

i. Systems designed or enhanced by the Contractor, such as, HVAC controls, fire alarm, fire sprinkler, and irrigation systems.

j. Modifications (change order price shall include the Contractor's cost to change working and final as-built drawings to reflect modifications) and comply with the following procedures.

(1) Directions in the modification for posting descriptive changes shall be followed.

(2) A modification circle shall be placed at the location of each deletion.

(3) For all new details or sections which are added to a drawing, a modification circle shall be placed by the detail or section title.

(4) For minor changes, a modification circle shall be placed by the area

changed on the drawing (each location).

(5) For major changes to a drawing, place a modification circle by the title of the affected plan, section, or detail at each location.

(6) For changes to schedules or drawings, a modification circle shall be placed either by the schedule heading or by the change in the schedule.

(7) The modification circle size shall be 1/2 inch diameter unless the area where the circle is to be placed is crowded. Smaller size circle shall be used for crowded areas.

1.3.1.3 Drawing Preparation

The as-built drawings shall be modified as may be necessary to correctly show the features of the project as it has been constructed by bringing the contract set into agreement with approved working as-built prints, adding such additional drawings as may be necessary. At the time of final inspection, 1 copy of the working as-built prints shall be delivered to the Contracting Officer for review and approval. These working as-built marked prints shall be neat, legible and accurate. These drawings are part of the permanent records of this project and shall be returned to the Contracting Officer. Any drawings damaged or lost by the Contractor shall be satisfactorily replaced by the Contractor at no expense to the Government.

1.3.1.4 Computer Aided Design and Drafting (CADD) Drawings

Only personnel proficient in the preparation of CADD drawings shall be employed to modify the contract drawings or prepare additional new drawings. Additions and corrections to the contract drawings shall be equal in quality and detail to that of the originals. Line colors, line weights, lettering, layering conventions, and symbols shall be the same as the original line colors, line weights, lettering, layering conventions, and symbols. If additional drawings are required, they shall be prepared using the specified electronic file format applying the same guidance specified for original drawings. The title block and drawing border to be used for any new final as-built drawings shall be identical to that used on the contract drawings. Additions and corrections to the contract drawings shall be accomplished using CADD files . The Contractor will use the most current version of Microstation software using Windows NT operating system. The electronic files will be supplied on ISO 9660 Format compact dics, read-only memory (CD-ROM). The Contractor shall be responsible for providing all program files and hardware necessary to prepare final as-built drawings. The Contracting Officer will review final as-built drawings for accuracy and the Contractor shall make all required corrections, changes, additions, and deletions.

a. When final revisions have been completed, the cover sheet drawing shall show the wording "RECORD DRAWING AS-BUILT" followed by the name of the Contractor in letters at least 3/16 inch high. All other contract drawings shall be marked either "AS-Built" drawing denoting no revisions on the sheet or "Revised As-Built" denoting one or more revisions. Original contract drawings shall be dated in the revision block.

b. After receipt by the Contractor of the approved working as-built prints and approval of completed sections of final as-builts the Contractor shall, within 10 days for each specific phase of work for contracts less than $5 million, or 20 days for each specific phase of work for contracts $5 million and above, make the final as-built submittal. This submittal shall consist of one ISO 9660 compact disc, read-only memory (CD-ROM), one set of mylars, and two sets of prints of these drawings and the return of the approved marked working as-built prints. They shall be complete in all details and identical in form and function to the contract drawing files supplied by the Government. Any transactions or adjustments necessary to accomplish this are the responsibility

of the Contractor. The Government reserves the right to reject any drawing files it deems incompatible with the customer's CADD system. All paper prints, drawing files and storage media submitted will become the property of the Government upon final approval. Failure to submit final as-built drawing files and marked prints as specified shall be cause for withholding any payment due the Contractor under this contract and shall be grounds for a final unsatisfactory Contractor performance evaluation. Approval and acceptance of final as-built drawings shall be accomplished before final payment is made to the Contractor.

1.3.1.5 Omitted

1.3.1.6 Payment

No separate payment will be made for as-built drawings required under this contract, and all costs in connection therewith shall be considered a subsidiary obligation of the Contractor.

PART 2 PRODUCTS (NOT USED)

PART 3 EXECUTION (NOT USED)

-- End of Section --

SECTION TABLE OF CONTENTS

DIVISION 01 - GENERAL REQUIREMENTS

SECTION 01781

OPERATION AND MAINTENANCE DATA

12/01

PART 1 GENERAL

1.1 SUBMISSION OF OPERATION AND MAINTENANCE DATA
1.1.1 Package Quality
1.1.2 Package Content
1.1.3 Changes to Submittals
1.2 TYPES OF INFORMATION REQUIRED IN O&M DATA PACKAGES
1.2.1 Operating Instructions
1.2.1.1 Safety Precautions
1.2.1.2 Operator Prestart
1.2.1.3 Startup, Shutdown, and Post-Shutdown Procedures
1.2.1.4 Normal Operations
1.2.1.5 Emergency Operations
1.2.1.6 Operator Service Requirements
1.2.1.7 Environmental Conditions
1.2.2 Preventive Maintenance
1.2.2.1 Lubrication Data
1.2.2.2 Preventive Maintenance Plan and Schedule
1.2.3 Corrective Maintenance (Repair)
1.2.3.1 Troubleshooting Guides and Diagnostic Techniques
1.2.3.2 Wiring Diagrams and Control Diagrams
1.2.3.3 Maintenance and Repair Procedures
1.2.3.4 Removal and Replacement Instructions
1.2.3.5 Spare Parts and Supply Lists
1.2.4 Corrective Maintenance Work-Hours
1.2.5 Appendices
1.2.6 Parts Identification
1.2.6.1 Warranty Information
1.2.6.2 Personnel Training Requirements
1.2.6.3 Testing Equipment and Special Tool Information
1.2.6.4 Contractor Information
1.3 SCHEDULE OF OPERATION AND MAINTENANCE DATA PACKAGES
1.3.1 Data Package 1
1.3.2 Data Package 2
1.3.3 Data Package 3
1.3.4 Data Package 4
1.3.5 Data Package 5

PART 2 PRODUCTS

PART 3 EXECUTION

-- End of Section Table of Contents --

SECTION 01781

OPERATION AND MAINTENANCE DATA
12/01

PART 1 GENERAL

1.1 SUBMISSION OF OPERATION AND MAINTENANCE DATA

Submit Operation and Maintenance (O&M) Data specifically applicable to this contract and a complete and concise depiction of the provided equipment, product, or system. Organize and present information in sufficient detail to clearly explain O&M requirements at the system, equipment, component, and subassembly level. Include an index preceding each submittal. Submit in accordance with this section and Section 01330, "Submittal Procedures."

1.1.1 Package Quality

Documents must be fully legible. Poor quality copies and material with hole punches obliterating the text or drawings will not be accepted.

1.1.2 Package Content

Data package content shall be as shown in the paragraph titled "Schedule of Operation and Maintenance Data Packages." Comply with the data package requirements specified in the individual technical sections, including the content of the packages and addressing each product, component, and system designated for data package submission.

1.1.3 Changes to Submittals

Manufacturer-originated changes or revisions to submitted data shall be furnished by the Contractor if a component of an item is so affected subsequent to acceptance of the O&M Data. Changes, additions, or revisions required by the Contracting Officer for final acceptance of submitted data, shall be submitted by the Contractor within 30 calendar days of the notification of this change requirement.

1.2 TYPES OF INFORMATION REQUIRED IN O&M DATA PACKAGES

1.2.1 Operating Instructions

Include specific instructions, procedures, and illustrations for the following phases of operation:

1.2.1.1 Safety Precautions

List personnel hazards and equipment or product safety precautions for all operating conditions.

1.2.1.2 Operator Prestart

Include procedures required to set up and prepare each system for use.

1.2.1.3 Startup, Shutdown, and Post-Shutdown Procedures

Provide narrative description for Startup, Shutdown and Post-shutdown operating procedures including the control sequence for each procedure.

1.2.1.4 Normal Operations

Provide narrative description of Normal Operating Procedures. Include Control Diagrams with data to explain operation and control of systems and specific equipment.

1.2.1.5 Emergency Operations

Include Emergency Procedures for equipment malfunctions to permit a short period of continued operation or to shut down the equipment to prevent further damage to systems and equipment. Include Emergency Shutdown Instructions for fire, explosion, spills, or other foreseeable contingencies. Provide guidance and procedures for emergency operation of all utility systems including required valve positions, valve locations and zones or portions of systems controlled.

1.2.1.6 Operator Service Requirements

Include instructions for services to be performed by the operator such as lubrication, adjustment, inspection, and recording gage readings.

1.2.1.7 Environmental Conditions

Include a list of Environmental Conditions (temperature, humidity, and other relevant data) that are best suited for the operation of each product, component or system. Describe conditions under which the item equipment should not be allowed to run.

1.2.2 Preventive Maintenance

Include the following information for preventive and scheduled maintenance to minimize corrective maintenance and repair.

1.2.2.1 Lubrication Data

Include preventative maintenance lubrication data, in addition to instructions for lubrication provided under paragraph titled "Operator Service Requirements":

a. A table showing recommended lubricants for specific temperature ranges and applications.

b. Charts with a schematic diagram of the equipment showing lubrication points, recommended types and grades of lubricants, and capacities.

c. A Lubrication Schedule showing service interval frequency.

1.2.2.2 Preventive Maintenance Plan and Schedule

Include manufacturer's schedule for routine preventive maintenance, inspections, tests and adjustments required to ensure proper and economical operation and to minimize corrective maintenance. Provide manufacturer's projection of preventive maintenance work-hours on a daily, weekly, monthly, and annual basis including craft requirements by type of craft. For periodic calibrations, provide manufacturer's specified frequency and procedures for each separate operation.

1.2.3 Corrective Maintenance (Repair)

Include manufacturer's recommended procedures and instructions for correcting problems and making repairs.

1.2.3.1 Troubleshooting Guides and Diagnostic Techniques

Include step-by-step procedures to promptly isolate the cause of typical

malfunctions. Describe clearly why the checkout is performed and what conditions are to be sought. Identify tests or inspections and test equipment required to determine whether parts and equipment may be reused or require replacement.

1.2.3.2 Wiring Diagrams and Control Diagrams

Wiring diagrams and control diagrams shall be point-to-point drawings of wiring and control circuits including factory-field interfaces. Provide a complete and accurate depiction of the actual job specific wiring and control work. On diagrams, number electrical and electronic wiring and pneumatic control tubing and the terminals for each type, identically to actual installation configuration and numbering.

1.2.3.3 Maintenance and Repair Procedures

Include instructions and alist of tools required to repair or restore the product or equipment to proper condition or operating standards.

1.2.3.4 Removal and Replacement Instructions

Include step-by-step procedures and a list required tools and supplies for removal, replacement, disassembly, and assembly of components, assemblies, subassemblies, accessories, and attachments. Provide tolerances, dimensions, settings and adjustments required. Instructions shall include a combination of text and illustrations.

1.2.3.5 Spare Parts and Supply Lists

Include lists of spare parts and supplies required for maintenance and repair to ensure continued service or operation without unreasonable delays. Special consideration is required for facilities at remote locations. List spare parts and supplies that have a long lead-time to obtain.

1.2.4 Corrective Maintenance Work-Hours

Include manufacturer's projection of corrective maintenance work-hours including requirements by type of craft. Corrective maintenance that requires completion or participation of the equipment manufacturer shall be identified and tabulated separately.

1.2.5 Appendices

Provide information required below and information not specified in the preceding paragraphs but pertinent to the maintenance or operation of the product or equipment. Include the following:

1.2.6 Parts Identification

Provide identification and coverage for all parts of each component, assembly, subassembly, and accessory of the end items subject to replacement. Include special hardware requirements, such as requirement to use high-strength bolts and nuts. Identify parts by make, model, serial number, and source of supply to allow reordering without further identification. Provide clear and legible illustrations, drawings, and exploded views to enable easy identification of the items. When illustrations omit the part numbers and description, both the illustrations and separate listing shall show the index, reference, or key number that will cross-reference the illustrated part to the listed part. Parts shown in the listings shall be grouped by components, assemblies, and subassemblies in accordance with the manufacturer's standard practice. Parts data may cover more than one model or series of equipment, components, assemblies, subassemblies, attachments, or accessories, such as typically shown in a master parts catalog

1.2.6.1 Warranty Information

List and explain the various warranties and include the servicing and technical precautions prescribed by the manufacturers or contract documents in order to keep warranties in force. Include warranty information for primary components such as the compressor of air conditioning system.

1.2.6.2 Personnel Training Requirements

Provide information available from the manufacturers that is needed for use in training designated personnel to properly operate and maintain the equipment and systems.

1.2.6.3 Testing Equipment and Special Tool Information

Include information on test equipment required to perform specified tests and on special tools needed for the operation, maintenance, and repair of components.

1.2.6.4 Contractor Information

Provide a list that includes the name, address, and telephone number of the General Contractor and each Subcontractor who installed the product or equipment, or system. For each item, also provide the name address and telephone number of the manufacturer's representative and service organization most convenient to the project site. Provide the name, address, and telephone number of the product, equipment, and system manufacturers.

1.3 SCHEDULE OF OPERATION AND MAINTENANCE DATA PACKAGES

Furnish the O&M data packages specified in individual technical sections. The required information for each O&M data package is as follows:

1.3.1 Data Package 1

a. Safety precautions

b. Maintenance and repair procedures

c. Warranty information

d. Contractor information

e. Spare parts and supply list

1.3.2 Data Package 2

a. Safety precautions

b. Normal operations

c. Environmental conditions

d. Lubrication data

e. Preventive maintenance plan and schedule

f. Maintenance and repair procedures

g. Removal and replacement instructions

h. Spare parts and supply list

i. Parts identification

j. Warranty information

k. Contractor information

1.3.3 Data Package 3

a. Safety precautions

b. Normal operations

c. Emergency operations

d. Environmental conditions

e. Lubrication data

f. Preventive maintenance plan and schedule

g. Troubleshooting guides and diagnostic techniques

h. Wiring diagrams and control diagrams

i. Maintenance and repair procedures

j. Removal and replacement instructions

k. Spare parts and supply list

l. Parts identification

m. Warranty information

n. Testing equipment and special tool information

o. Contractor information

1.3.4 Data Package 4

a. Safety precautions

b. Operator prestart

c. Startup, shutdown, and post-shutdown procedures

d. Normal operations

e. Emergency operations

f. Operator service requirements

g. Environmental conditions

h. Lubrication data

i. Preventive maintenance plan and schedule

j. Troubleshooting guides and diagnostic techniques

k. Wiring diagrams and control diagrams

l. Maintenance and repair procedures

m. Removal and replacement instructions

n. Spare parts and supply list

o. Corrective maintenance man-hours

p. Parts identification

q. Warranty information

r. Personnel training requirements

s. Testing equipment and special tool information

t. Contractor information

1.3.5 Data Package 5

a. Safety precautions

b. Operator prestart

c. Start-up, shutdown, and post-shutdown procedures

d. Normal operations

e. Environmental conditions

f. Preventive maintenance plan and schedule

g. Troubleshooting guides and diagnostic techniques

h. Wiring and control diagrams

i. Maintenance and repair procedures

j. Spare parts and supply list

k. Testing equipments and special tools

l. Warranty information

m. Contractor information

PART 2 PRODUCTS

Not used.

PART 3 EXECUTION

Not used.

-- End of Section --

SECTION TABLE OF CONTENTS

DIVISION 02 - SITE WORK

SECTION 02013

ENVIRONMENTAL PROTECTION DURING CONSTRUCTION

04/00

PART 1 GENERAL

1.1 SCOPE
1.2 QUALITY CONTROL
1.3 SUBMITTALS
1.4 IMPLEMENTATION
1.5 SUBCONTRACTORS
1.6 PAYMENT
1.7 NOTIFICATION
1.8 PROTECTION OF ENVIRONMENTAL RESOURCES
1.8.1 Protection of Land Resources
1.8.1.1 Forest Resources
1.8.1.2 Work Area Limits
1.8.1.3 Protection of Landscape
1.8.1.4 Reduction of Exposure of Unprotected Erodible Soils
1.8.1.5 Erosion and Sedimentation Control Plan
1.8.1.6 Disposal of Chemical Waste
1.8.1.7 Disposal of Discarded Materials
1.8.1.8 Recycling
1.8.1.9 Fuel and Lubricants
1.8.2 Preservation and Recovery of Historical, Archaeological, and Cultural Resources
1.8.2.1 Artifacts Discovered During Construction
1.8.2.2 Cultural Resources Protected by Law
1.8.3 Protection of Water Resources
1.8.3.1 Monitoring of Environmental Damage
1.8.4 Protection of Wildlife and Wildlife Habitat
1.8.4.1 Endangered Species Act
1.8.4.2 Red-Cockaded Woodpecker
1.8.4.3 Endangered Plants
1.8.5 Protection of Air Resources
1.8.5.1 Particulates
1.8.5.2 Odors
1.8.5.3 Air Quality
1.8.5.4 Air Permits
1.8.5.5 Burning
1.8.6 Reduction of Sound Intrusions
1.8.7 Application of Pesticides
1.8.7.1 Licensing and Certification
1.9 PREVIOUSLY USED EQUIPMENT
1.10 MILITARY MUNITIONS
1.11 POST-CONSTRUCTION CLEANUP
1.12 RESTORATION OF LANDSCAPE DAMAGE
1.13 MAINTENANCE OF POLLUTION CONTROL FACILITIES
1.13.1 Containment Berms
1.13.2 Erosion Control Devices
1.13.3 Storm Drains
1.14 TRAINING OF CONTRACTOR PERSONNEL IN POLLUTION CONTROL

PART 2 PRODUCTS (Not Applicable)

PART 3 EXECUTION (Not Applicable)

-- End of Section Table of Contents --

SAVH-02013 (04/00)

SECTION 02013

ENVIRONMENTAL PROTECTION DURING CONSTRUCTION
04/00

PART 1 GENERAL

Attachments:
Erosion and Sedimentation Control Plan
Financial Responsibility/Ownership Form

1.1 SCOPE

This section covers prevention of environmental pollution and damage to the environment as the result of construction operations under this contract and for those measures set forth in other technical provisions of these specifications. For the purpose of this specification, environmental pollution and damage to the environment is defined as the presence of chemical, physical, or biological elements or agents which adversely affect human health or welfare; unfavorably alter ecological balances of importance to human life; affect other species of importance to man; or degrade the utility of the environment for aesthetic, cultural, and/or historical purposes. The control of environmental pollution and damage requires consideration of the potential effects of an action upon air, water, and land resources, and includes management of visual aesthetics, natural and cultural resources, noise levels, solid waste, hazardous waste, toxic waste, radiant energy, and radioactive materials, as well as other pollutants.

1.2 QUALITY CONTROL

The Contractor shall establish and maintain quality control for environmental protection of all items set forth herein. The Contractor shall record on daily reports any problems in complying with laws, regulations, ordinances, and corrective action taken. The Contractor shall immediately inform the Contracting Officer of any environmental problem.

1.3 SUBMITTALS

Government approval is required for submittals with a "G" designation; submittals not having a "G" designation are for information only. When used, a designation following the "G" designation identifies the office that will review the submittal for the Government. The following shall be submitted in accordance with Section 01330 SUBMITTAL PROCEDURES:

SD-01 Preconstruction Submittals

Environmental Protection Plan; G-RE.

The Contractor shall submit an Environmental Protection Plan which must be approved by the Contracting Officer with input from the PWBC Environmental/Natural Resources Division prior to construction. The plan shall include, but is not limited to, the following:

a. Legal Requirements: A list of Federal, State, and local laws, regulations, and permits concerning environmental protection and pollution control and abatement that are applicable to the Contractor's proposed operations and the requirements imposed by those laws, regulations, and permits shall be included. Whenever there is a conflict between Federal, State, or local laws, regulations, and permit requirements, the more restrictive provision shall apply.

b. Protection of Features: The Contractor shall prepare a listing of methods to protect resources needing preservation within authorized work areas. These include natural vegetation such as trees, shrubs, vines, grasses, and ground cover; landscape features; air and water quality; fish and wildlife habitat; endangered species; and soil conservation, as well as historical, archaeological, and cultural resources.

c. Environmental Protection Procedures: Procedures to be implemented to provide the required environmental protection and to comply with the applicable laws and regulations shall be included. The Contractor shall set out the procedures to be followed to correct pollution of the environment due to accident, natural causes, or failure to follow the procedures set out in accordance with the Environmental Protection Plan.

d. Spill Control Plan: The Spill Control plan shall include the procedures, instructions, and reports to be used in the event of an unforeseen spill of a substance regulated by 40 CFR 68, 40 CFR 302, 40 CFR 355, and/or regulated under State or Local laws and regulations. The Spill Control Plan supplements the requirements of EM 385-1-1. This plan shall include as a minimum:

1. The name of the individual who will report any spills or hazardous substance releases and who will follow up with complete documentation. This individual shall immediately notify the Contracting Officer and Facility Fire Department in addition to the legally required Federal, State, and local reporting channels (including the National Response Center 1-800-424-8802) if a reportable quantity is released to the environment. The plan shall contain a list of the required reporting channels and telephone numbers.

2. The name and qualifications of the individual who will be responsible for implementing and supervising the containment and cleanup.

3. Training requirements for Contractor's personnel and methods of accomplishing the training.

4. A list of materials and equipment to be immediately available at the job site, tailored to cleanup work of the potential hazard(s) identified.

5. The names and locations of suppliers of containment materials and locations of additional fuel oil recovery, cleanup, restoration, and material-placement equipment available in case of an unforeseen spill emergency.

6. The methods and procedures to be used for expeditious contaminant cleanup.

Environmental Monitoring Management Plan; G-RE.

The Environmental Protection Plan shall include plans for monitoring environmental compliance for the job site, including land, water, air, noise, hazardous and toxic wastes, and materials and solid waste disposal.

Protection of Land Resources; G-RE.

Plan of protection for land resources as described in paragraph Protection of Land Resources of this specification shall be included.

Erosion and Sediment Control Plan (ESCP); G-RE.

Erosion and Sediment Control Plan as described in paragraph Erosion and Sediment Control Plan of this specification shall be included.

Protection of Surface and Ground Water; G-RE.

Methods of protecting surface and ground water during construction activities as described in paragraph Protection of Water Resources of this specification shall be included.

Protection of Air Resources; G-RE.

Methods for protecting air resources as described in paragraph Protection of Air Resources of this specification shall be included.

SD-05 Design Data

Design Drawings; G-RE.

Drawings showing locations of any proposed temporary excavations or embankments for haul roads, stream crossings, material storage areas, temporary fuel tanks, sanitary facilities, and stockpiles of excess or spoil materials shall be included.

1.4 IMPLEMENTATION

The Contractor shall submit, in writing, the Environmental Protection Plan to the Contracting Officer within 10 days after receipt of Notice to Proceed. The Contracting Officer shall forward the Contractor's plan to the PWBC Environmental/Natural Resources Division for approval. Approval of the Contractor's plan will not relieve the Contractor of his responsibility for adequate and continuing control of pollutants and other environmental protection measures.

1.5 SUBCONTRACTORS

Assurance that subcontractors comply with the environmental protection requirements of this section will be the responsibility of the prime Contractor.

1.6 PAYMENT

No separate payment will be made for work covered under this section. The Contractor shall be responsible for payment of fees associated with environmental permits, application, and/or notices obtained by the Contractor. All costs associated with this section shall be included in the contract price. The Contractor shall be responsible for payment of all fines/fees for violation or non-compliance with Federal, State, Regional and local laws and regulations.

1.7 NOTIFICATION

The Contracting Officer will notify the Contractor in writing of any observed noncompliance with the aforementioned Federal, State, or local laws or regulations, permits, and other elements of the Contractor's Environmental Protection Plan. The Contractor shall, after receipt of such notice, inform the Contracting Officer of proposed corrective action and implement such action as approved by the PWBC Environmental/Natural Resources Division. If the Contractor fails to comply promptly, the Contracting Officer may issue an order stopping all or part of the work until satisfactory corrective action has been taken. No time extensions shall be granted or costs or damages allowed to the Contractor for any such suspension.

1.8 PROTECTION OF ENVIRONMENTAL RESOURCES

The environmental resources within the project boundaries and those affected outside the limits of permanent work under this contract shall be protected during the entire period of this contract. The Contractor shall confine his

activities to areas defined by the drawings and specifications. Environmental protection shall be as stated in the following subparagraphs:

1.8.1 Protection of Land Resources

Prior to the start of any construction, the Contractor shall identify all land resources to be preserved within the Contractor's work area. The Contractor shall not remove, cut, deface, injure, or destroy land resources, including trees, shrubs, vines, grasses, topsoil, and landforms, without special permission from the Contracting Officer. No ropes, cables, or guys shall be fastened or attached to any trees for anchorage unless specifically authorized. Where such special emergency use is permitted, the Contractor shall provide effective protection for land and vegetation resources at all times.

1.8.1.1 Forest Resources

Merchantable timber and pine straw shall neither be cut nor removed from the construction site until it has been assessed by the Savannah District Timber Harvest office in conjunction with PWBC Natural Resources Branch. The Savannah District Timber Harvest office will be given adequate time to arrange for the sale and removal of timber and pine straw. In the event that the Savannah District and Natural Resources Branch determine the amount or quality of timber or pine straw is not merchantable, they will inform the Contracting Officer. The Contracting Officer will authorize the Contractor to remove forest resources which are in the footprint of construction.

1.8.1.2 Work Area Limits

Prior to any construction, the Contractor shall mark the areas that are not required to accomplish all work to be performed under this contract. Isolated areas within the general work area which are to be saved and protected shall also be marked or fenced. Monuments and markers shall be protected before construction operations begin. Where construction operations are to be conducted during darkness, the markers shall still remain visible. The Contractor shall convey to his personnel the purpose of marking and/or protection of all necessary objects. Damage to protected areas/objects shall be repaired immediately by the Contractor at no additional cost to the Government.

1.8.1.3 Protection of Landscape

Trees, shrubs, grasses, landforms, and other landscape features indicated and defined on the drawings to be preserved shall be clearly identified by marking, fencing, wrapping, or any other approved techniques. Care shall be exercised to protect tree root zones as well.

1.8.1.4 Reduction of Exposure of Unprotected Erodible Soils

Earthwork brought to final grade shall be finished as indicated and specified. Side slopes and back slopes shall be protected as soon as practicable upon completion of rough grading. All earthwork shall be planned and conducted to minimize the duration of exposure of unprotected soils. Except in instances where the constructed feature obscures borrow areas, quarries, and waste material areas, these areas shall not initially be cleared in total. Clearing of such areas shall progress in reasonably sized increments as needed to use the areas as approved by the Contracting Officer.

1.8.1.5 Erosion and Sedimentation Control Plan

The Contractor shall be responsible for implementing the terms and requirements of the attached Erosion and Sediment Control Plan (ESCP)in accordance with North Carolina Administrative Code, Title 15A, Department of Natural and Economic Resources, Chapter 4, Sedimentation Control. Unless otherwise

indicated, the Contractor shall be responsible for implementing all measures described in the ESCP. The Government has operational control over construction plans and specifications, including the ability to make modifications to those plans and specifications. The Contractor shall have day-to-day operational control of those activities which are necessary to ensure compliance with the requirements specified herein. The Government will be responsible for all submissions to the North Carolina Department of Natural and Economic Resources. The Government shall retain the official copy of all documents pertaining to compliance with the ESCP permit during construction. The Contractor shall be responsible for updating the ESCP during construction. Proposed changes to the ESCP shall be submitted to the COR for approval. The Contractor shall modify the ESCP whenever there is a change in design, construction, operation, or maintenance, which has a significant effect on the potential for the discharge of pollutants to the water of the state, or if the ESCP proves to be ineffective in achieving the general objectives of controlling pollutants in storm water discharges associated with construction activity.

1.8.1.6 Disposal of Chemical Waste

The Contractor is responsible for the proper use, storage, and disposal of chemical material and waste in accordance with Fort Bragg Regulation 200-2. The PWBC Environmental/Natural Resources Division has established the following requirements in order for the post to remain in compliance with hazardous waste requirements as established by both State of North Carolina and Federal environmental laws:

a. Compatible Containers: Chemical waste shall be contained and stored in aboveground compatible containers. Hazardous wastes shall not be stored underground. Any release or spill to the environment will be immediately reported to the Contracting Officer, PWBC Fire Department at telephone (910) 396-8112 and to the PWNC Environmental/Natural Resources Division at telephone (910) 396-3341.

b. Recycling: The Contractor is encouraged to provide for recycling of waste through the Defense Reutilization and Marketing Office, Fort Bragg.

c. Chemical Analysis: The Contractor is responsible for obtaining chemical analysis of all chemical waste. All chemical waste shall be disposed of in accordance with Fort Bragg's Waste Analysis Plan. Sampling of suspected hazardous waste is required to determine the hazardous waste characterization of the material. The Contractor is required to notify the Contracting Officer 1 day before the samples are taken. Samples shall be delivered by the Contracting Officer to the PWBC Environmental/Natural Resources Division for transmittal to an independent analytical laboratory. The laboratory shall be listed in the Environmental Protection Plan approved by the Contracting Officer and PWBC Environmental/Natural Resources Division.

d. Nonhazardous Waste: Waste that has been certified as nonhazardous waste may be removed off the project site by the Contractor. This waste shall be disposed of in accordance with all applicable State of North Carolina requirements and U.S. Army Center for Health Promotion and Preventive Medicine (CHPPM) guidance. The Contractor shall address the disposal method and location of the disposal site for each chemical waste in the Environmental Protection Plan for the project.

e. Hazardous Waste: The Contractor may not normally remove hazardous waste from Fort Bragg. Removal shall be performed by a licensed hazardous waste firm. The hazardous waste contractor shall prepare the hazardous waste manifest form for signature by the Environmental/Natural Resources Division before each shipment of hazardous waste. Refer to Fort Bragg Regulation 200-2.

f. Labeling: Each container of hazardous waste shall be immediately labeled

with a hazardous waste label and marked with the current date once any hazardous waste is put in the container. The Contractor shall keep the containers closed and inspect them weekly for signs of rust or deterioration. Inspection results shall be documented. Additionally, the U.S. Department of Transportation shipping name shall be marked on each container before it is removed from Fort Bragg. Refer to Fort Bragg Regulation 200-2.

g. Training: The Contractor shall ensure that all of his employees who handle hazardous waste are trained in the management requirements for hazardous waste. Two hours of on-the-job training by the Environmental/Natural Resources Division will be scheduled for the first Wednesday of each month. All Contractor employees physically handling or managing waste media shall receive this training. Refer to Fort Bragg Regulation 200-2.

1.8.1.7 Disposal of Discarded Materials

Discarded materials, other than those which can be included in the solid waste category, will be handled as directed by the Contracting Officer. Construction and demolition debris shall be recycled to the maximum extent possible. Non-recyclable construction and demolition debris shall be disposed of at the Fort Bragg demolition landfill on Lamont Road, and materials contaminated by asbestos or lead paint shall be contained and disposed of in the asbestos section of the demolition landfill. The Contractor must obtain a permit from the PWBC Environmental/Natural Resources Division to dispose of materials in the landfills on post.

1.8.1.8 Recycling

The Contractor shall implement a recycling program that includes separate collection of waste and recyclable materials. Based upon contract plans and drawings, the Contractor shall estimate the quantities of available materials for recycling. The Contractor shall provide a material dismantling sequence plan, a schedule for removal, and the estimated quantity of recyclable materials to the Environmental Flight, 43 CES/CEV, at the pre-construction meeting. The Contractor shall provide necessary equipment for the temporary storage and handling of C&D debris. Recyclable materials to be recovered shall include the following:

a. Asphalt

b. Concrete, concrete block

c. Metal, ferrous and non-ferrous

d. Green wastes (i.e. trees, brush, grass trimmings)

e. Miscellaneous construction wastes (i.e. red clay brick, corrugated cardboard)

Contractor shall coordinate his recycling efforts with the Civil Engineer Environmental Office (43 CES/CEV) Solid Waste Manager at 910/394-1635. Contractor is responsible for arranging collection by or delivery to the permitted Ft. Bragg C&D Landfill and Transfer Station that accepts construction and demolition waste for the purpose of recycling. Prior to delivering materials, the Contractor shall itself with the specifications for acceptance of construction and demolition materials at recycling facilities or transfer stations. Contractor shall provide recycled materials data in pounds to the Solid Waste Program Manager by the 5th day of each month throughout the length of the contract.

1.8.1.9 Fuel and Lubricants

Storage, fueling and lubrication of equipment and motor vehicles shall be

conducted in a manner that affords the maximum protection against spill and evaporation. Fuel, lubricants and oil shall be managed and stored in accordance with all Federal, State, Regional, and local laws and regulations. Used lubricants and used oil to be discarded shall be stored in marked corrosion-resistant containers and recycled or disposed in accordance with 40 CFR 279, State, and local laws and regulations. There shall be no storage of fuel on the project site. Fuel must be brought to the project site each day that work is performed.

1.8.2 Preservation and Recovery of Historical, Archaeological, and Cultural Resources

Existing historical, archaeological, and cultural resources within the Contractor's work area will be designated by the Contracting Officer and precautions taken to preserve all significant resources as they existed at the time they were pointed out to the Contractor. The Contracting Officer's guidance shall be taken from the recommendations of the cultural resources survey produced for the project area by the Savannah District, U.S. Army Corps of Engineers. The Contractor shall install all protection for resources designated on the drawings and shall be responsible for their preservation during this contract.

1.8.2.1 Artifacts Discovered During Construction

Any unforeseen historical or archaeological finds encountered during Contractor operations shall be justification to cease all activity in the affected area. The Contracting Officer shall be promptly notified and shall notify the PWBC Environmental/Natural Resources Division and 43 CES/CEV. The Government will determine the significance of the findings, if necessary, after consultation with the North Carolina State Historic Preservation Officer, prior to authorizing the Contractor to resume operations in that area.

1.8.2.2 Cultural Resources Protected by Law

Cultural resources on Federal property are protected and managed by the Archaeological Resources Protection Act of 1979, and other applicable laws. Artifacts may be collected on Fort Bragg only after approval by the Contracting Officer and the PWBC Environmental/Natural Resources office as part of a controlled research design for scientific and cultural purposes. Collection for personal use is not authorized. Conviction subjects the violator to civil and criminal penalties.

1.8.3 Protection of Water Resources

The Contractor shall keep construction activities under surveillance, management, and control to avoid pollution of surface and ground waters. Special management techniques shall be implemented to control water pollution by any construction activities which are included in the performance of this contract.

1.8.3.1 Monitoring of Environmental Damage

Monitoring of water courses and wetland affected by construction activities shall be the responsibility of the Contractor. Wetland is intolerant to disturbance and will require special design and management to prevent encroachment. During construction, action will be required to maintain buffer areas and soil erosion control measures near water areas which could be adversely affected by construction activities.

1.8.4 Protection of Wildlife and Wildlife Habitat

The Contractor shall keep construction activities under surveillance, management, and control to minimize interference with, disturbance to, and

damage of wildlife. Information concerning any species that require specific attention, along with measures for their protection, will be provided by the PWBC Environmental/Natural Resources Division through the Contracting Officer to the Contractor prior to start of construction operations.

1.8.4.1 Endangered Species Act

The Federal Endangered Species Act of 1973, as amended in 1982, requires that Federal lands be assessed for impacts upon endangered species and that such species be managed and protected. Although there are a number of rare, threatened, or endangered plant and animal species on Fort Bragg which are listed by either the Federal or State Government, the species most often of concern are an endangered bird, the red-cockaded woodpecker (RCW) (Picoides borealis) and two endangered plants, the rough-leaf loosestrife (RLLS) (Lysimachia asperulaefolia) and Michaux's sumac (MS) (Rhus michauxii). Species proposed for listing under the provisions of the Federal Endangered Species Act are entitled to the same protection as those actually listed.

1.8.4.2 Red-Cockaded Woodpecker

The RCW is dependent upon large numbers of mature pine trees for its survival. The birds are not tolerant of disturbance. Their habitat is managed by the PWBC Environmental/Natural Resources Division, Endangered Species Branch. The habitat of the RCW is marked in the following manner: (1) cavity trees which are used by the birds for roosting and nesting are marked with two broad bands of white paint and (2) each colony site is protected by a buffer area at least 200 feet in diameter around the cavity trees. Trees on the edge of the buffer area are marked with a single broad band of white paint. Fixed activity such as storage of construction materials, operation of concrete batch plants, or parking of vehicles is not authorized inside the buffer area. Molesting the birds or damaging their habitat is a violation of the Endangered Species Act. Conviction can subject the violator to severe civil and criminal penalties.

1.8.4.3 Endangered Plants

Endangered plants are dependent for their survival upon specific environmental conditions such as soil type, slope aspect, moisture, and light. They are not tolerant of disturbance. Their habitat is managed by the PWBC Environmental/Natural Resources Division, Endangered Species Branch. Each colony site is protected by a buffer area at least 200 feet in diameter. Trees on the edge of the buffer area are marked with a single broad band of white paint. Fixed activity such as storage of construction materials, operation of concrete batch plants, or parking of vehicles is prohibited inside the buffer area. Damaging the habitat of endangered plants is a violation of the Endangered Species Act. Conviction can subject the violator to severe civil and criminal penalties.

1.8.5 Protection of Air Resources

The Contractor shall keep construction activities under surveillance, management, and control to minimize pollution of air resources. All activities, equipment, processes, and work operated or performed by the Contractor in accomplishing the specified construction shall be in strict accordance with all State of North Carolina and Federal emission and performance laws and standards. Ambient Air Quality Standards set by the Environmental Protection Agency (EPA) shall be maintained for all construction operations and activities. The Contractor shall have sufficient functional equipment available to accomplish the task.

1.8.5.1 Particulates

Dust particles, aerosols, and gaseous byproducts from all construction activities and the processing and preparing of materials, such as from

asphaltic batch plants, shall be controlled at all times.

1.8.5.2 Odors

Odors shall be controlled at all times for all construction activities, processing, and preparation of materials.

1.8.5.3 Air Quality

Monitoring of air quality shall be the responsibility of the Contractor. All air areas affected by the construction activities shall be monitored by the Contractor when directed by the Contracting Officer.

1.8.5.4 Air Permits

Any new construction project which involves the installation of parts degreasers, paint booths, bead blasters, wood cyclones, boilers, generators or like equipment must be coordinated through the Environmental Flight Air Quality Program Manager. An air permit may be required. If so, the permit must be obtained prior to the start of construction. The Environmental Flight is the base office of primary responsibility for air permits.

1.8.5.5 Burning

Burning shall be prohibited on the Government premises.

1.8.6 Reduction of Sound Intrusions

The Contractor shall keep construction activities under surveillance and control to minimize disturbances caused by excessive noise. Equipment shall have properly operating noise-muffling devices for the entire length of the contract.

1.8.7 Application of Pesticides

The Contractor shall apply all pesticides in accordance with the requirements of the Federal Insecticide, Fungicide, and Rodenticide Act, using pesticides approved by the EPA and following the instructions on the manufacturer's label. Application of termiticides during construction, if applicable, will be addressed in paragraph SOIL TREATMENT of Section 02315a EXCAVATION, FILLING, AND BACKFILLING FOR BUILDINGS.

1.8.7.1 Licensing and Certification

All pesticide applications shall be performed by a Contractor certified in the EPA category or categories which cover the work to be performed and shall hold a valid business license. For work at Fort Bragg, the Contractor shall be certified and licensed by the State of North Carolina. The Contractor shall present evidence of such licensing and certification to the Contracting Officer for approval prior to award of the contract.

1.9 PREVIOUSLY USED EQUIPMENT

The Contractor shall clean all previously used construction equipment prior to bringing it onto the project site. The Contractor shall ensure that the equipment is free from soil residuals, egg deposits from plant pests, noxious weeds, and plant seeds. The Contractor shall consult with the USDA jurisdictional office for additional cleaning requirements.

1.10 MILITARY MUNITIONS

In the event the Contractor discovers or uncovers military munitions as defined in 40 CFR 260, the Contractor shall immediately stop work in that area and

immediately inform the Contracting Officer.

1.11 POST-CONSTRUCTION CLEANUP

The Contractor shall be responsible for cleaning up all areas affected by the construction and restore them back to at least their original condition to include landscaping; planting of trees, grass, and shrubs damaged by construction; and raking and disposal of debris such as roofing shingles, paper, nails, glass, sheet metal, bricks, and waste concrete. Backfilled areas shall be machine compacted and replanted with grass. Construction debris shall be removed and properly disposed of. Culverts and drainage ditches with sediment from the construction area shall be cleared routinely to maintain proper drainage and recleaned prior to completion of the contract.

1.12 RESTORATION OF LANDSCAPE DAMAGE

The Contractor shall restore all landscape features damaged or destroyed during construction operations outside the limits of the approved work areas. Such restoration shall be in accordance with the Environmental Protection Plan submitted for approval to the Contracting Officer. This work will be accomplished at the Contractor's expense.

1.13 MAINTENANCE OF POLLUTION CONTROL FACILITIES

The Contractor shall maintain all constructed facilities and portable pollution control devices for the duration of the contract or for the length of time construction activities produce the particular pollutant.

1.13.1 Containment Berms

The Contractor shall build a containment berm around temporary aboveground fuel storage tanks. The bermed area shall be large enough to contain 125 percent of the volume of the storage tanks if there is a leak. The Contractor shall not install any temporary underground storage tanks.

1.13.2 Erosion Control Devices

The Contractor shall immediately repair any damaged erosion control structures, such as silt fences, and remove accumulated sediment.

1.13.3 Storm Drains

The Contractor shall ensure sediment does not block storm drains. The Contractor shall be responsible for cleaning storm drains blocked due to erosion of sediment off site.

1.14 TRAINING OF CONTRACTOR PERSONNEL IN POLLUTION CONTROL

The Contractor shall train his personnel in all phases of environmental protection. The training shall include methods of detecting and avoiding pollution, familiarization with pollution standards, both statutory and contractual, and installation and care of facilities (vegetative covers and instruments required for monitoring purposes) to ensure adequate and continuous environmental pollution control. Such training shall be completed before contract work begins.

PART 2 PRODUCTS (Not Applicable)
PART 3 EXECUTION (Not Applicable)

-- End of Section --

EROSION AND SEDIMENTATION CONTROL PLAN

POL STORAGE COMPLEX
POPE AIR FORCE BASE, NC

PURPOSE

This narrative has been prepared for the POL Storage Complex at Pope AFB, North Carolina. The purpose of the narrative is to provide additional information to the drawings and specifications contained in the Erosion and Sedimentation Control Plan.

PROJECT DESCRIPTION

The proposed POL STORAGE COMPLEX project is to provide adequate hydrant refueling to support the aircraft assigned to Pope AFB, provide a new POL Operations Facility, and provide a truck maintenance building. A location map is provided on drawing C1-1 (Regional Map and Location Plan).

The project will provide a 3000 GPM hydrant fueling system and connect to 20 existing hydrant pits. The system will include: a new Filter Building with a Control Room and a Generator Room; two (2) 10,000-bbl capacity operating storage tanks with concrete pump rooms on top; potable water and wastewater collection; distribution piping to fueling pits; hydrant hose truck checkout pad; two (2) new truck fill stands; two (2) commercial truck offloads; extension of a fuel transfer line to the new Filter Building; oil re-circulating units; fire alarm system; emergency shutoff switches; and backup diesel generator, and a generator for the POL Operation Building. The POL Operation Building will include a fuels lab, classroom, office space, and a fuel control center. An existing building will be turned into a storage building to store items for the daily truck maintenance functions. The new POL Complex will be situated on 14.3 acres of land, all of which can be expected to be disturbed at some time during construction. Construction will occur in 4 phases. New facilities, grading and drainage of the site are presented on drawings C4-0 through C4-4 (Grading and Drainage Plans). Strom drain design details are provided in Specification 02630A (Storm-Drainage System) and calculations have been included. Site-specific soils information is provided in the Foundation Report.

FACILITY SITING

Site Location.

The new POL Storage Complex will be located northwest of the aircraft operational apron (Green Ramp) off of Hurst Drive. The need for a new location for the Pope AFB POL Storage Complex has been mandated by the construction of explosive facilities near the complex. Quantity-distance (QD) safety zones (arcs) imposed by the explosive

facilities mandate that the existing POL Storage Complex be reconfigured and relocated. The new site for the POL Storage Complex has been chosen by the Air Force. A portion of the complex will populate the existing complex site, but only with those facilities that meet the quantity-distance requirements. The remaining facilities will be located on the new site, which is contiguous to the existing site.

Site Description/Site Removals.

A recently constructed wing tank maintenance facility and paved storage area is located in the northeast portion of the site. The remainder of the northeast portion of the site is mostly turfed; trees are scattered along the street side. The southwest portion of the site is currently populated with the existing POL Storage Yard. All buildings, including the existing Administrative and Operations Building, 10,000 barrel above-ground fuel storage tank with concrete dike, fuel systems equipment, fill stands and pavements located within the existing yard, will be removed. The recently constructed wing tank maintenance building will be altered for use as a vehicle checkpoint for the new complex. Pavement located around the check point building will be removed, as well as trees, fencing, an asphalt drive, and any utilities located on the site that would interfere with construction of the POL Storage Complex. All construction debris will be disposed of at the Ft. Bragg Demolition Landfill. Drawings C1-2 through C1-6 (Survey Plans) present the existing survey conditions for the site. Removal of existing buildings is shown on drawings C2-0, C2-1, C2-3, C2-5 and C2-7 (Site Removal Plans).

Construction Phasing.

Construction of the new POL Storage Complex, and removal of the existing storage yard will be phased to allow for continuous and efficient fuel operations. The new POL Operations Facility (Phase 1) will be completed and turned-over to the Government prior to start of demolition of the existing POL/Ops Facility and refueler parking area. The new fueling system (Phase 2) will be completed prior to start of demolition of the existing fueling system (Phase 3). Phase 1A will be constructed concurrently with Phase 1 and Phase 2. Boundaries of each phase are presented on drawing C1-7 (Site Phasing Plan).

Erosion and Sedimentation Control

The Contractor shall establish erosion and sedimentation control measures prior to beginning land disturbing activities. Any deficiency of the Erosion and Sediment Control Plan (ESCP) shall be corrected by the Contractor and submitted to the COR for approval. The Contractor shall maintain and modify the ESCP whenever there is a change in design, construction, operation, or maintenance, which has a significant effect on the potential for the discharge of pollutants to the waters of the state. Drawings C4-7 through C4-11 (Erosion Control Plans) and Specification 02013 (Environmental Protection During Construction) provide measures to be taken to prevent discharge of pollutants from the site.

LANDSCAPING/IRRIGATION

Turf.

All turfed areas will be covered with Bermuda grass. Only the lawn areas around the Admin/Ops Building will be sodded. All other turfed areas will be planted by hydroseeding. Permanent and temporary vegetation are detailed in Specifications 02921A (Seeding) and 02922A (Sodding). When complete the site will have 0.1 acre of new sod and 8.4 acres of seeded turf. The Contractor will be responsible for establishing the turf. No lawn irrigation is planned. Areas to be seeded and sodded are shown on drawing L1-2 (Turf and Rock Surfacing Plan).

Plants.

Landscape plantings will be limited to the area of the new POL/Ops Building. Plants have been arranged for accent, screening, shade and protection. Only plants known to thrive in the area have been chosen. The Contractor will be responsible for establishing the plants. No plant irrigation system is planned. A landscaping plan is provided on drawing L1-1 (Landscape Plan) and planting details are given on L1-3 (Planting Details). Specification 02930A (Exterior Planting) covers the handling, planting and care of new landscaping in the area.

Rock Mulch.

All plant beds will be covered with a 3”-4” layer of 2”-3” River Rock over landscape fabric. Islands at the near the refueler parking where mowing is not desirable or feasible will also be surfaced with River Rock.

EROSION AND SEDIMENT CONTROL PLAN DOCUMENTS:

Erosion and Sediment Control Plan
Environmental Protection During Construction (Spec. 02013)
Storm-Drainage System (Spec. 02630A)
Storm Drainage Calculations
Seeding (Spec. 02921A)
Sodding (Spec. 02922A)
Exterior Planting (Spec. 02930A)
Foundation Report

Drawings

Sheet Number	Sheet Name
C1-1	Region Map and Location Plan
C1-2	Overall Survey Plan
C1-3	Survey Plan – Area 1
C1-4	Survey Plan – Area 2
C1-5	Survey Plan – Area 3
C1-6	Survey Plan – Area 4
C1-7	Site Phasing Plan
C2-0	Composite Removal Plan
C2-1	Removal Plan – Area 1
C2-3	Removal Plan – Area 2
C2-5	Removal Plan – Area 3
C2-7	Removal Plan – Area 4
C4-0	Composite Grading and Drainage Plan
C4-1	Grading and Drainage Plan – Area 1
C4-2	Grading and Drainage Plan – Area 2
C4-3	Grading and Drainage Plan – Area 3
C4-4	Grading and Drainage Plan – Area 4
C4-7	Composite Erosion Control Plan
C4-8	Erosion Control Plan – Area 1
C4-9	Erosion Control Plan – Area 2
C4-10	Erosion Control Plan – Area 3
C4-11	Erosion Control Plan – Area 4
C6-1	Road Profiles
C9-10	Erosion Control Details
L1-1	Landscape Plan
L1-2	Turf and Rock Surfacing Plan
L1-3	Planting Details

FINANCIAL RESPONSIBILITY /OWNERSHIP FORM
SEDIMENTATION POLLUTION CONTROL ACT

No person may initiate a land-disturbing activity on one or more acres as covered by the Act before this form and an acceptable erosion and sedimentation control plan have been completed and approved by the Land Quality Section, NC Department of Environment, and Natural Resources. (Please type or print and, if question is not applicable, place N/ A in the blank).

Part A.

1. Project Name POL Storage Complex
2. Location of land-disturbing activity: County Cumberland

   City or Township Spring Lake, and Highway/Street _____
3. Approximate date land-disturbing activity will be commenced: _____
4. Purpose of development (residential, commercial, industrial, etc.): _____
5. Total acreage disturbed or uncovered (including off-site borrow and waste areas):

   _____
6. Amount of fee enclosed $ 750.00
7. Has an erosion and sedimentation control plan been filed? Yes _____ No _____

   Enclosed _____
8. Person to contact should sediment control issues arise during land-disturbing activity.

   Name _____ Telephone _____
9. Landowner(s) of Record (Use blank page to list additional owners):

   _____ _____
   Name(s)

   _____ _____
   Current Mailing Address Current Street Address

   _____ _____
   City State Zip City State Zip
10. Recorded in Deed Book No. _____ Page No. _____

Part B.

Person(s) or firm(s) who are financially responsible for this land-disturbing activity (Use a blank page to list additional persons or firms):

_____ _____
Name of Person(s) or Firm(s)

_____ _____
Current Mailing Address Current Street Address

_____ _____
City State Zip City State Zip

Telephone _____ Telephone _____

2. (a) If the Financially Responsible Party is not a resident of North Carolina give name and street address of a North Carolina Agent.

_____	_____
Name	
_____	_____
Mailing Address	Street Address
_____	_____
City State Zip	City State Zip
Telephone _____	Telephone _____

(b) If the Financially Responsible Party is a Partnership or other person engaging in business under an assumed name, attach a copy of the certificate of assumed name. If the Financially Responsible Party is a Corporation give name and street address of the Registered Agent.

_____	_____
Name of Registered Agent	
_____	_____
Mailing Address	Street Address
_____	_____
City State Zip	City State Zip
Telephone _____	Telephone _____

The above information is true and correct to the best of my knowledge and belief and was provided by me under oath. (This form must be signed by the financially responsible person if an individual or his attorney-in-fact or if not an individual by an officer, director, partner, or registered agent with authority to execute instruments for the financially responsible person). I agree to provide corrected information should there be any change in the information provided herein.

_____	_____
Type or print name	Title or Authority
_____	_____
Signature	Date

I, _____, a Notary Public of the County of _____

State of North Carolina, hereby certify that _____ appeared personally before me this day and being duly sworn acknowledged that the above form was executed by him.

Witness my hand and notarial seal, this _____ day of _____, 19____

Seal

_____
Notary

My commission expires _____

FINANCIAL RESPONSIBILITY /OWNERSHIP FORM
SEDIMENTATION POLLUTION CONTROL ACT

No person may initiate a land-disturbing activity on one or more acres as covered by the Act before this form and an acceptable erosion and sedimentation control plan have been completed and approved by the Land Quality Section, NC Department of Environment, and Natural Resources. (Please type or print and, if question is not applicable, place N/ A in the blank).

Part A.

1. Project Name POL Storage Complex

2. Location of land-disturbing activity: County Cumberland

   City or Township Spring Lake, and Highway/Street _____

3. Approximate date land-disturbing activity will be commenced: _____

4. Purpose of development (residential, commercial, industrial, etc.): _____

5. Total acreage disturbed or uncovered (including off-site borrow and waste areas):

   _____

6. Amount of fee enclosed $ 750.00

7. Has an erosion and sedimentation control plan been filed? Yes _____ No _____

   Enclosed _____

8. Person to contact should sediment control issues arise during land-disturbing activity.

   Name _____ Telephone _____

9. Landowner(s) of Record (Use blank page to list additional owners):

   _____ _____
   Name(s)

   _____ _____
   Current Mailing Address Current Street Address

   _____ _____
   City State Zip City State Zip

10. Recorded in Deed Book No. _____ Page No. _____

Part B.

Person(s) or firm(s) who are financially responsible for this land-disturbing activity (Use a blank page to list additional persons or firms):

_____ _____
Name of Person(s) or Firm(s)

_____ _____
Current Mailing Address Current Street Address

_____ _____
City State Zip City State Zip

Telephone _____ Telephone _____

2. (a) If the Financially Responsible Party is not a resident of North Carolina give name and street address of a North Carolina Agent.

_____	_____
Name	
_____	_____
Mailing Address	Street Address
_____	_____
City State Zip	City State Zip
Telephone _____	Telephone _____

(b) If the Financially Responsible Party is a Partnership or other person engaging in business under an assumed name, attach a copy of the certificate of assumed name. If the Financially Responsible Party is a Corporation give name and street address of the Registered Agent.

_____	_____
Name of Registered Agent	
_____	_____
Mailing Address	Street Address
_____	_____
City State Zip	City State Zip
Telephone _____	Telephone _____

The above information is true and correct to the best of my knowledge and belief and was provided by me under oath. (This form must be signed by the financially responsible person if an individual or his attorney-in-fact or if not an individual by an officer, director, partner, or registered agent with authority to execute instruments for the financially responsible person). I agree to provide corrected information should there be any change in the information provided herein.

_____	_____
Type or print name	Title or Authority
_____	_____
Signature	Date

I, _____, a Notary Public of the County of _____

State of North Carolina, hereby certify that _____ appeared personally before me this day and being duly sworn acknowledged that the above form was executed by him.

Witness my hand and notarial seal, this _____ day of _____, 19____

Seal

_____
Notary

My commission expires _____

SECTION TABLE OF CONTENTS

DIVISION 02 - SITE WORK

SECTION 02115A

ABOVEGROUND STORAGE TANK REMOVAL

02/02

PART 1 GENERAL

1.1 REFERENCES
1.2 MEASUREMENT AND PAYMENT
1.3 SUBMITTALS
1.4 QUALIFICATIONS
1.4.1 Laboratory Services
1.4.2 Support Staff
1.5 REGULATORY REQUIREMENTS
1.5.1 Permits and Licenses
1.5.2 Statutes and Regulations
1.6 PROJECT/SITE CONDITIONS
1.6.1 Sequencing and Scheduling
1.6.2 Work Plan

PART 2 PRODUCTS

2.1 BACKFILL MATERIAL

PART 3 EXECUTION

3.1 GENERAL REQUIREMENTS
3.1.1 Safety Guidelines
3.1.2 Burning and Explosives
3.1.3 Protection of Existing Structures and Utilities
3.1.4 Shoring
3.2 TANK CONTENTS VERIFICATION
3.2.1 Sampling
3.2.2 Analysis
3.2.3 Characterization
3.3 CLEARING, GRUBBING AND REMOVALS
3.4 TOPSOIL
3.5 PREPARATIONS FOR EXCAVATION
3.5.1 Removal of Product, Pumpable Liquids, and Sludge
3.5.2 Contaminated Water Disposal
3.5.2.1 Sampling, Analysis, and Containment
3.5.2.2 Treatment
3.6 PURGING AND INERTING
3.7 EXCAVATION
3.7.1 Exploratory Trenches
3.7.2 Excavation around AST
3.7.3 Piping Excavation
3.7.4 Open Excavations
3.7.5 Stockpiles
3.8 REMOVAL OF PIPING, ANCILLARY EQUIPMENT, AND TANK
3.8.1 Piping and Ancillary Equipment
3.8.2 Not Used
3.8.3 Contaminated Soil, Tank and Piping Excavation Examination
3.9 TANK CLEANING
3.9.1 Exterior

3.9.2 Temporary Storage
3.9.3 Interior
3.10 Not Used
3.11 BACKFILLING
3.12 DISPOSAL REQUIREMENTS
3.12.1 Treatment, Disposal, and Recycling
3.12.2 Tank and Ancillary Equipment Disposal
3.12.3 Not Used
3.12.4 Salvage Rights

-- End of Section Table of Contents --

SECTION 02115A

ABOVEGROUND STORAGE TANK REMOVAL
02/02

PART 1 GENERAL

1.1 REFERENCES

The publications listed below form a part of this section to the extent referenced. The publications are referenced in the text by basic designation only.

AMERICAN PETROLEUM INSTITUTE (API)

API Pub 2217A	(1997) Guidelines for Work in Inert Confined Spaces in the Petroleum Industry
API Pub 2219	(1999) Safe Operation of Vacuum Trucks in Petroleum Service, 2nd Edition
API RP 1604	(1996) Closure of Underground Petroleum Storage Tanks
API RP 2003	(1998) Protection Against Ignitions Arising out of Static, Lightning, and Stray Currents
API Std 2015	(1994) Safe Entry and Cleaning of Petroleum Storage Tanks

AMERICAN SOCIETY FOR TESTING AND MATERIALS (ASTM)

ASTM D 2487	(2000) Classification of Soils for Engineering Purposes (Unified Soil Classification System)

U.S. NATIONAL ARCHIVES AND RECORDS ADMINISTRATION (NARA)

40 CFR 261	Identification and Listing of Hazardous Waste
40 CFR 266	Standards for the Management of Specific Hazardous Wastes and Specific Types of Hazardous Waste Management Facilities
40 CFR 279	Standards for the Management of Used Oil

1.2 MEASUREMENT AND PAYMENT

Compensation for removal of contaminated soil, pumpable liquids, and sludge shall be paid as a unit cost. This unit cost includes testing, excavation, stockpiling, transportation and disposal of the contaminated soil and backfilling with non-contaminated soil. Payment for all other work shall be under the base bid for the tank removal and shall constitute full payment for all work defined in the contract documents including testing of the contents, excavation and disposal of the tank, and testing of the underlying soil.

1.3 SUBMITTALS

Government approval is required for submittals with a "G" designation; submittals not having a "G" designation are for information only. When used, a

designation following the "G" designation identifies the office that will review the submittal for the Government. The following shall be submitted in accordance with Section 01330 SUBMITTAL PROCEDURES:

SD-03 Product Data

Work Plan; G-RE.

The Work Plan within 30 days after notice to proceed. The Contractor shall allow 14 days in the schedule for the Government's review and approval. No adjustment for time or money will be made for resubmittals required as a result of noncompliance.

Qualifications; G-RE

A document indicating that the Contractor meets the specified requirements.

Salvage Rights;

A record of the disposition of salvaged materials at the end of the contract.

1.4 QUALIFICATIONS

The Contractor shall have a minimum of 2 years of tank removal experience and shall be certified by the State of North Carolina for tank removal work.

1.4.1 Laboratory Services

For laboratory services the Contractor shall be validated in accordance with state certification requirements and Section 01450 CHEMICAL DATA QUALITY CONTROL.

1.4.2 Support Staff

The Contractor shall identify all staff involved for the various components, including personnel collecting and shipping samples. The qualifications of these staff members shall be detailed by the Contractor.

1.5 REGULATORY REQUIREMENTS

1.5.1 Permits and Licenses

The Contractor, as required or as directed by the Contracting Officer, shall obtain local, state, or federal permits and licenses that directly impact the Contractor's ability to perform the work prior to commencing removal operations.

1.5.2 Statutes and Regulations

Tank closures shall be carried out in accordance with the applicable local and State of North Carolina regulations. Hazardous waste is not expected at this Site.

1.6 PROJECT/SITE CONDITIONS

The work shall consist of removal, decontamination and disposal of one 10,000 BBL aboveground storage tank and associated piping and ancillary equipment. The tank is constructed of steel and is at the location shown on the drawings. The tank was used for storing jet fuel and has been taken out of service. Residue remaining in the tank is considered a special waste. Subsurface conditions are represented herein. Existing native soils are predominantly

silty or sandy clay. Groundwater has been encountered within 30 feet of the surface. The Contractor shall verify the actual conditions prior to submitting a bid. The site is not a hazardous waste site but shall be given special consideration due to the nature of the materials and hazards present until closure activities are complete.

1.6.1 Sequencing and Scheduling

The Contractor shall notify the Installation Environmental Coordinator and the Contracting Officer 30 days prior to tank removal. The Contracting Officer will be responsible for contacting the Implementation Agency (IA) in accordance with the applicable reporting requirements.

1.6.2 Work Plan

The Contractor shall develop, implement, maintain, and supervise as part of the work, a comprehensive plan for tank removal and related operations. As a minimum the plan shall include, but not be limited to, excavation, removal, and ultimate disposal of the tank, its contents, and any contaminated materials. The Work Plan shall be based on work experience, on the requirements of this specification, and on the following references:

a. API RP 1604.

b. API Std 2015.

c. API RP 2003.

d. API Pub 2217A.

e. API Pub 2219.

No work at the site, with the exception of site inspections and mobilization, shall be performed until the Work Plan is approved. At a minimum, the Work Plan shall include:

a. Discussion of the removal approach, tank cleaning, and tank cutting procedures.

b. A Sampling and Analysis Plan prepared in accordance with Section 01450 CHEMICAL DATA QUALITY CONTROL.

c. Methods to be employed for product, sludge, vapor, and pumpable liquid removal; purging and inerting; and storage methods proposed for control of surface water.

d. Treatment options.

e. Identification of waste, tank and contaminated soil transporters and means of transportation.

f. Treatment, disposal, and alternate facilities, and means of treatment, disposal or remediation.

g. Borrow source.

h. Spill prevention plan.

i. Spill contingency plan.

j. Decontamination procedures, shoring plan, and safety measures in accordance with Section 01351A SAFETY, HEALTH, AND EMERGENCY RESPONSE (HTRW/UST).

PART 2 PRODUCTS

2.1 BACKFILL MATERIAL

Imported backfill is not anticipated. If necessary, backfill material shall be obtained from off-site. Backfill shall be classified in accordance with ASTM D 2487 as GW, GP, GM, GC, SW, SP, SM, SC, MH, CL, or CH and shall be free from roots and other organic matter, trash, debris, snow, ice or frozen materials. If off-site materials are used, soil classification test results shall be approved prior to bringing the material onsite. The testing frequency for backfill material shall be 1 per 1000 cubic yards or a minimum of 1 test. Non-contaminated material removed from the excavation shall be used for backfill in accordance with Paragraph BACKFILLING.

PART 3 EXECUTION

3.1 GENERAL REQUIREMENTS

3.1.1 Safety Guidelines

Personnel shall abide by the safety guidelines specified in Section 01351A SAFETY, HEALTH, AND EMERGENCY RESPONSE (HTRW/UST).

3.1.2 Burning and Explosives

Use of explosives or burning debris will not be allowed.

3.1.3 Protection of Existing Structures and Utilities

The Contractor shall take all necessary precautions to avoid damage to existing structures, their appurtenances, monitoring wells, or utilities that may be affected by work activities. Any damage to utilities or monitoring wells resulting from the Contractor's operations shall be repaired at no expense to the Government. The Contractor shall coordinate with the installation to locate underground utilities prior to beginning construction. Utilities encountered which were not previously shown or otherwise located shall not be disturbed without approval from the Contracting Officer.

3.1.4 Shoring

Shoring requirements shall be provided in accordance with Section 01351A SAFETY, HEALTH, AND EMERGENCY RESPONSE (HTRW/UST).

3.2 TANK CONTENTS VERIFICATION

Sampling and analysis shall be conducted in accordance with the approved Sampling and Analysis Plan and Section 01450 CHEMICAL DATA QUALITY CONTROL.

3.2.1 Sampling

Tank pumpable liquids,and sludge shall be sampled by the Contractor. If the data is not adequate, additional sampling and analysis to the extent required by the approved off-sitepermitted treatment, storage or disposal (TSD) facility receiving the material shall be the responsibility of the Contractor . Meeting all regulatory requirements, including the preparation of hazardous materials and waste for transportation shall be the responsibility of the Contractor.

3.2.2 Analysis

Tank contents shall be tested by the Contractor for the parameters listed herein.

3.2.3 Characterization

Tank product, pumpable liquids, and sludge shall be characterized in accordance with 40 CFR 261 and 40 CFR 279. The waste contents determination and accompanying test results for each phase present in the tank shall be submitted to the Contracting Officer.

3.3 CLEARING, GRUBBING AND REMOVALS

Areas designated for clearing and grubbing as shown on the drawingsor as required and directed by the Contracting Officer shall be cleared of all trees, stumps, down timber, brush, rubbish, roots larger than 3 inches in diameter, and matted roots prior to commencing operations. Concrete or asphalt pavement shall be saw cut at the limits of removal, broken and removed with the resulting debris disposed off Government Propertyafter Base-required recycling quotas are met. Chain link fence shall be removed and salvaged for reuse.

3.4 TOPSOIL

Topsoil shall meet the requirements in Section 02300a EARTHWORK. Uncontaminated topsoil shall be stripped and stockpiled separately for reuse at a location approved by the Contracting Officer.Topsoil shall be used wherever shown or stated on the drawings.

3.5 PREPARATIONS FOR EXCAVATION

Before demolition, the Contractor shall drain product piping back to the tank, remove residual liquids trapped in the product lines, and remove all product from the tank; and the tank shall be purged and vented in accordance with API RP 1604, and as specified herein.

3.5.1 Removal of Product, Pumpable Liquids, and Sludge

Tank product, pumpable liquids, and sludge shall be contained, and stored onsite, prior to disposal. Contaminated water shall be treated as specified. Tank product, pumpable liquids, and sludge shall be analyzed and segregated to recover reusable products by the Contractor prior to being transported to the designated location. Tank product, pumpable liquids, and sludge shall be removed and disposed of by the Contractor. No Government facilities shall be used for permanent storage or disposal of the wastes. Temporary storage on Government facilities will be allowed only until testing is complete, manifests (if necessary) are complete, and transportation is arranged. The Contractor shall be responsible for obtaining all required permits. Usable product shall be the property of the Government. The Contractor shall provide approved containers, vehicles, equipment, labor, signs, labels, placards and manifests and associated land disposal restriction notices and notifications, necessary for accomplishment of the work, including materials necessary for cleaning up spills that could occur from tank removal operations.

3.5.2 Contaminated Water Disposal

3.5.2.1 Sampling, Analysis, and Containment

Contaminated water shall be sampled and analyzed both prior to and after treatment. Contaminated water produced from excavation operations including de-watering of excavations and tank pumping treated onsite, shall be analyzed for benzene, ethylbenzene, toluene, and xylene (BETX). Sampling and analysis shall be performed prior to discharge to the installation sanitary sewer for every 50,000 gallons of contaminated water treated. Analysis for contaminated water to be taken to an off-site treatment facility shall conform to the requirements of the treatment facility with documentation of all analyses performed furnished to the Contracting Officer in accordance with paragraph RECORDS. Contaminated water shall be contained, stored onsite, and analyzed

prior to being transported to the approved treatment, storage and disposal facility and disposed of by the Contractor in accordance with applicable Federal and state disposal regulations. The Contractor shall provide approved containers, vehicles, equipment, labor, signs, labels, placards and manifests and associated land disposal notices and notifications, necessary for accomplishment of the work. Sampling and analyses of contaminated water and treated water and the Contractor and laboratory quality assurance program shall be in accordance with Section 01450 CHEMICAL DATA QUALITY CONTROL.

3.5.2.2 Treatment

Contaminated water shall be treated onsite by oil water separation or other means as approved by the Contracting Officer. If contaminated water is to be treated onsite, the proposed treatment shall be specified in the Work Plan and submitted for approval. Temporary storage and treatment equipment shall be installed at a location approved by the Contracting Officer. Treated effluent shall be sampled and analyzed and the results approved by the Contracting Officer before discharge to the sanitary sewer. Effluent shall be treated and discharged in accordance with the discharge permit.

3.6 PURGING AND INERTING

After the tank and piping contents have been removed, the Contractor shall disconnect all the piping (except the piping needed to purge or inert the tank). Flammable and toxic vapors shall be purged from the tank or the tank made inert in accordance with API RP 1604, with the exceptions that filling with water shall not be used and, if dry ice is employed, the Contractor shall use a minimum of or 3 pounds per 100 gallons of tank volume. The tank atmosphere shall be continuously monitored for combustible vapors if the tank is purged, or continuously monitored for oxygen if the tank is inerted.

3.7 EXCAVATION

Excavation areas, as well as work near roadways, shall be marked in accordance with Section 01351A SAFETY, HEALTH, AND EMERGENCY RESPONSE (HTRW/UST).

3.7.1 Exploratory Trenches

Exploratory trenches shall be excavated as necessary to determine the limits and the location of ancillary equipment.

3.7.2 Excavation around AST

After purging and removal of the AST, excavation around the perimeter of the tank shall be performed limiting the amount of potentially petroleum contaminated soil that could be mixed with previously uncontaminated soil. All petroleum-contaminated soil shall be removed and stock-piled in a location determined by Pope AFB CEV. The Contractor shall maintain around the tank an excavation of sufficient size to allow workers ample room to complete the work, but also protect the workers from sliding or cave-ins. Sheeting, bracing, or shoring shall be installed in the absence of adequate side slopes if there is a need for workers to enter the excavated area. Surface water shall be diverted to prevent direct entry into the excavation. Dewatering of the excavation may require a discharge permit by the State and shall be limited to allow adequate access to the tank and piping, to assure a safe excavation, and to ensure that compaction and moisture requirements are met during backfilling. Dewatering may result in the production of petroleum contaminated water and/or free product. Free product shall be recovered from the groundwater only as part of necessary dewatering. It is not anticipated that groundwater will be encountered, however perched water maybe encountered in the excavation.

3.7.3 Piping Excavation

Excavation shall be performed as necessary to remove tank piping and ancillary equipment in accordance with paragraphs: Shoring, Tank Excavation, and Open Excavations.

3.7.4 Open Excavations

Open excavations and stockpile areas shall be secured while awaiting confirmation test results from the soil beneath the tank. The excavation shall be backfilled as soon as possible after tank and contaminated soil removals have been completed and confirmation samples have been taken. The Contractor shall divert surface water around excavations to prevent water from directly entering into the excavation.

3.7.5 Stockpiles

Uncontaminated excavated soil and petroleum contaminated soil that is not a state-regulated hazardous waste shall be stockpiled and used for backfill in the tank excavation prior to using borrow material. The stockpile shall be covered with a geomembrane cover that shall prevent rain or surface water from coming into contact with the contaminated soil, as well as limit the escape of the volatile constituents in the stockpile.

3.8 REMOVAL OF PIPING, ANCILLARY EQUIPMENT, AND TANK

3.8.1 Piping and Ancillary Equipment

All piping and ancillary equipment shall be disconnected from the tank. The piping shall be removed completely (interior and exterior of the tank).The piping exterior and ancillary equipment shall be cleaned to remove all soil and inspected for signs of corrosion and leakage. The Contractor shall ensure no spillage of the piping contents occurs, as specified in the Work Plan, and as required in paragraph SPILLS.

3.8.2 Not Used

3.8.3 Contaminated Soil, Tank and Piping Excavation Examination

After the tank has been removed, the adjacent and underlying soil shall be examined for any evidence of leakage. The soil shall be visually inspected for staining after removal of all obviously contaminated soil. Uncontaminated soil or petroleum contaminated soil not regulated by the state as hazardous waste shall be stockpiled onsite per paragraph Stockpiles.

3.9 TANK CLEANING

3.9.1 Exterior

Soil shall be removed from the exterior of the tank, piping, and associated equipment to eliminate soil deposition on roadways during transportation to a temporary storage area, ensure markings will adhere to the surfaces, and simplify tank cutting. Soil shall be removed using non-sparking tools. Removed uncontaminated soil and soil not regulated by the state as a hazardous waste shall be recovered and used as backfill or disposed of onsite.

3.9.2 Temporary Storage

If the tank is stored after the tank exterior is cleaned and ancillary equipment is removed, and prior to being cut into sections, the tank shall be labeled as directed in API RP 1604, and temporarily stored in the area of the existing tank site. Prior to cleaning the tank interior the tank atmosphere shall be monitored for combustible vapors and purged or inerted if combustible vapors are detected.

3.9.3 Interior

The tank interior shall be cleaned using a high pressure (greater than 500 psi), low volume (less than 2 gpm) water spray or steam cleaned until all loose scale and sludge is removed, and contamination, in the form of a sheen, is no longer visible in the effluent stream. The interior surfaces of piping shall also be cleaned, to the extent possible, using the same method used for cleaning the tank. Contaminated water generated from interior cleaning operations (of both piping and tank) shall not exceed the following quantities for each AST cleaned:

AST VOLUME (GALLONS)	PERCENT OF AST VOLUME
1,000 or less	5
10,000 or less	5 or 100 gal., whichever is less
20,000 or less	1 or 150 gal., whichever is less
greater than 20,000	1 or 250 gal., whichever is less

All contaminated water resulting from cleaning operations shall be discharged to the installation sanitary sewer after passing through an oil water separator. Cleaning shall be accomplished eliminating, to the greatest extent possible, the need for personnel to enter the tank. Cleaning shall be done using specially designed tank cleaning equipment which allows the tank to be cleaned prior to cutting into sections without requiring personnel to enter the tank or, if less specialized equipment is used, the tank shall be partially dissected to overcome confined space entry hazards. This work shall be accomplished in accordance with Section 01351A SAFETY, HEALTH, AND EMERGENCY RESPONSE (HTRW/UST).

3.10 Not Used

3.11 BACKFILLING

Only clean fill may be returned to the excavation, per Pope AFB CEV.

3.12 DISPOSAL REQUIREMENTS

3.12.1 Treatment, Disposal, and Recycling

Disposal of special wastes shall be in accordance with all local, State, and Federal solid and hazardous waste laws and regulations; the RCRA; and conditions specified herein. This work shall include all necessary personnel, labor, transportation, packaging, detailed analyses (if required for disposal, manifesting or completing waste profile sheets), equipment, and reports. Product and pumpable liquids removed from the tank shall be recycled to the greatest extent practicable. The AST shall be cut up and salvaged by the Contractor.

3.12.2 Tank and Ancillary Equipment Disposal

After the tank, piping, and ancillary equipment have been removed from the excavation and the tank cleaned, the tank shall be cut into sections (using appropriate methods). 5 Tank and piping sections shall be recycledin a salvage yard. The tank shall be cut into sections prior to being taken off Government property. The Contractor shall not sell the tank intact. Ancillary equipment shall be recycled ata salvage yard . Piping shall be disconnected from the tank and removed unless otherwise indicated.

3.12.3 Not Used

3.12.4 Salvage Rights

The Contractor shall retain the rights to salvage value of recycled or reclaimed

product and metal not turned in to the DRMO or otherwise identified, so long as the requirements of 40 CFR 266 and 40 CFR 279, or the applicable State requirements are met. At the end of the contract, the Contractor shall provide documentation on the disposition of salvaged materials.

-- End of Section --

SECTION TABLE OF CONTENTS

DIVISION 02 - SITE WORK

SECTION 02116

REMOVAL AND DISPOSAL OF UNDERGROUND STORAGE TANKS

09/99

PART 1 GENERAL

1.1 REFERENCES
1.2 DESCRIPTION OF WORK
1.2.1 Tank Closure
1.2.2 Regulations
1.3 SUBMITTALS
1.4 AREAS OF CONTAMINATION
1.5 QUALIFICATIONS (CONTRACTOR EXPERIENCE)
1.6 COMPLIANCE
1.7 QUALITY ASSURANCE
1.7.1 Excavation and Material Handling Plan
1.7.2 Field Sampling and Laboratory Testing Plan
1.7.3 Tank and Piping Removal and Disposal Plan

PART 2 PRODUCTS

2.1 PLASTIC SHEETING

PART 3 EXECUTION

3.1 REMOVAL AND DISPOSAL OF TANKS
3.2 SITE SAFETY AND HEALTH PLAN (SSHP)
3.3 SITE SAFETY AND HEALTH OFFICER
3.4 SPILL AND DISCHARGE CONTROL PLAN
3.5 EXCLUSION ZONE (EZ) AND CONTAMINATION REDUCTION ZONE (CRZ)
3.6 TRAINING
3.6.1 On-Site Training
3.6.2 Training Outline
3.7 PERSONNEL PROTECTION
3.8 RESPIRATORY PROTECTION PROGRAM
3.9 DECONTAMINATION
3.10 FIRST AID AND EMERGENCY RESPONSE EQUIPMENT AND PROCEDURES
3.11 IGNITION SOURCES
3.12 PERSONNEL AND EQUIPMENT DECONTAMINATION
3.13 WASTE DISPOSAL
3.14 EMERGENCY RESPONSE REQUIREMENTS
3.15 UNFORESEEN HAZARDS
3.16 ADDITIONAL REQUIREMENTS
3.17 TEMPORARY CONTAINMENT OF EXCAVATED SOIL
3.18 EXCAVATION
3.18.1 Excavation Procedures
3.18.2 Excavation Methods
3.18.3 Structures
3.19 TESTING
3.19.1 Stockpiled Soils
3.19.2 Testing Under Tank After Removal of Tank
3.19.3 Testing Along Piping
3.20 WATER DISPOSAL
3.21 SECURING TANK SYSTEM

3.22 REMOVAL OF UNDERGROUND TANKS ANCHORS, SLABS, AND ASSOCIATED PIPING
3.22.1 Preparation
3.22.2 Purging
3.22.3 Cleaning and Testing
3.22.4 Tank Removal
3.23 INSPECTIONS
3.24 CLOSURE REPORT (SITE ASSESSMENT REPORT)
3.25 SPILLS OF CONTAMINATED SOILS
3.26 BACKFILL

-- End of Section Table of Contents --

SECTION 02116

REMOVAL AND DISPOSAL OF UNDERGROUND STORAGE TANKS
09/99

PART 1 GENERAL

1.1 REFERENCES

The publications listed below form a part of this specification to the extent referenced. The publications are referred to in the text by the basic designation only.

AMERICAN PETROLEUM INSTITUTE (API)

API RP 1604	(1996) Closure of Underground Petroleum Storage Tanks
API PUBL 1628	(1996) Assessment and Remediation of Underground Petroleum Releases

AMERICAN SOCIETY FOR TESTING AND MATERIALS (ASTM)

ASTM D 4397	(1996) Polyethylene Sheeting for Construction, Industrial, and Agricultural Applications

U.S. NATIONAL ARCHIVES AND RECORDS ADMINISTRATION (NARA)

29 CFR 1910	Occupational Safety and Health Standards
40 CFR 280	Owners and Operators of Underground Storage Tanks

U.S. ARMY CORPS OF ENGINEERS (USACE)

EM 385-1-1	(1996) Safety and Health Requirements Manual

U.S. ENVIRONMENTAL PROTECTION AGENCY (EPA)

EPA SW-846	(1995) Evaluating Solid Waste (Physical/Chemical Methods)
EPA 600/4-79/020	(1976) Contaminant Monitoring

NORTH CAROLINA ADMINISTRATIVE CODE (NCAC)

15A NCAC 2N	Underground Storage Tanks
15A NCAC 2L.0115	Risk-Based Assessment and Corrective Action for Petroleum Underground Storage Tanks

http://ust.enr.state.nc.us

Guidelines for Assessment and Corrective Action, North Carolina Underground Storage Tank Section

1.2 DESCRIPTION OF WORK

The work includes removing and disposing of underground storage tanks and related work.

1.2.1 Tank Closure

Perform work to close, remove, and dispose of underground storage tanks, and connecting piping in accordance with 15A NCAC 2N; including but not limited to dewatering (if approved), disposal of contaminated soil, laboratory testing, providing reports which are required by regulatory agencies, and backfilling.

1.2.2 Regulations

Perform work in accordance with local, State, and Federal regulations and 40 CFR 280.

1.3 SUBMITTALS

Submit the following in accordance with Section 01330, "Submittal Procedures."

SD-06 Test Reports

Laboratory testing reports; G-RE

Laboratory testing reports including location of soil excavated and associated OVA/FID (organic vapor analyzer/flame ionization device) readings, TPH (total petroleum hydrocarbons), BTEX (benzene, toluene, ethylbenzene, and xylene), and MADEP EPH and/or VPH, sampling and test results.

SD-07 Certificates

Site safety and health plan; G-RE

Describe safety and health plan and procedures as related to underground tank removal and pipe removal, and as related to operations associated with petroleum contaminated soils and water. Furnish the name and qualifications based on education, training, and work experience of the proposed Site Safety and Health Officer.

Excavation and material handling plan; G-RE

Field sampling and laboratory testing plan; G-RE

Tank and piping removal and disposal plan; G-RE

Qualification; G-RE

Spill and discharge control plan;

SD-11 Closeout Submittals

Other permits; G-RE

Building permit and other permits required for underground tank removal;

Results of excavation; G-RE

Results of excavation including sketch showing location of underground storage tank, sampling locations, and extent of excavation;

Tank disposal paperwork; G-RE

Tank disposal paperwork, such as copy of UST Notification Form and method of conditioning tank for disposal

Contaminated soil disposal paperwork; G-RE

Contaminated soil disposal paperwork, such as laboratory testing reports]

Contaminated water disposal paperwork; G-RE

Contaminated water disposal paperwork, such as laboratory testing results

Identification of tanks removed and disposed of; G-RE

Identification of tanks removed and disposed of, including site map showing location of tank and piping

Starting and ending dates of reporting period;

Closure report; G-RE.

Incorporate reports, records, and data into a single binder with the title "SITE ASSESSMENT REPORT" on the cover of the binder; follow State of North Carolina guidance on Closure Reports

Cumulative quantities of soil excavated; G-RE

Cumulative quantities of soil excavated, beginning with start date for each tank and associated piping

1.4 AREAS OF CONTAMINATION

Assume for bidding purposes that soil, bituminous pavement, concrete slabs, and water encountered during the removal of the underground tanks are contaminated with diesel fuelor JP-8 jet fuel and shall be handled as specified herein. Bituminous pavement and concrete slabs shall be washed and disposed of as demolition debris. Wash water shall be collected and treated with an oil water separator and disposed down the sanitary sewer.

1.5 QUALIFICATIONS (CONTRACTOR EXPERIENCE)

Submit data for approval showing that the tank removal Contractor, subcontractors, and personnel employed on the project have been engaged in removal, transportation, and disposal of underground tanks and associated piping, are familiar with and shall abide with the following:

a. API RP 1604.

b. 40 CFR 280 and State and local regulations and procedures.

c. Applicable safety rules and regulations.

d. Use of equipment and procedures for testing and vapor-freeing tanks.

e. Handling and disposal of types of wastes encountered in underground tank and pipe removal including disposal of underground tanks and associated piping.

f. Excavation, testing, and disposal of petroleum contaminated soils, liquids, and sludge.

g. Provide documentation that tank removers are certified if locality of

project has this requirement.

In addition, furnish data proving experience on at least three prior projects which included types of activities similar to those in this project. Provide project titles, dates of projects, owners of projects, point of contact for each project, and phone numbers of each point of contact.

1.6 COMPLIANCE

Comply with applicable local, State, and Federal regulations, procedures, and 40 CFR 280.

1.7 QUALITY ASSURANCE

1.7.1 Excavation and Material Handling Plan

Describe methods, means, equipment, sequence of operations and schedule to be employed in excavation, transport, handling, and stockpiling of soil during underground tank removal. Fifteen days before beginning tank removal work, submit to the Contracting Officer for approval a material handling plan that describes phases of dealing with the contaminated soil and water as it relates to the proposed tanks and piping removal, including methods of excavating, a material handling plan for the contaminated material, soil testing requirements, safety precautions and requirements, and water pumping and collection requirements.

1.7.2 Field Sampling and Laboratory Testing Plan

Describe field sampling methods and quality control procedures. Identify laboratory and laboratory methods to be used for contamination testing. Sample reports shall show sample identification for location, date, time, sample method, contamination level, name of individual sampler, identification of laboratory, and quality control procedures.

1.7.3 Tank and Piping Removal and Disposal Plan

Describe methods, means, sequence of operations, and schedule to be employed in the testing, pumping, cleaning, de-vaporizing, inspecting, removal, and disposal of underground storage tanks and piping.

PART 2 PRODUCTS

2.1 PLASTIC SHEETING

ASTM D 4397.

PART 3 EXECUTION

3.1 REMOVAL AND DISPOSAL OF TANKS

Furnish labor, materials, necessary permits, laboratory tests, and reports and equipment to remove and dispose of products remaining in the underground tanks; clean and vapor free the underground tanks and connecting piping; excavate, remove underground tanks and associated piping, and backfill to the level of the adjacent ground; sample soil and water to determine if contaminated; dispose of tanks and associated piping, petroleum contaminated soil and water. Provide work in accordance with 40 CFR 280 and in accordance with appropriate Federal, State, and local regulations.

3.2 SITE SAFETY AND HEALTH PLAN (SSHP)

Furnish safety, health, and accident prevention provisions and develop a Site Safety and Health Plan (SSHP). The SSHP shall incorporate the requirements of

29 CFR 1910 and EM 385-1-1. Site work shall not start until the SSHP is approved by the Contracting Officer.

3.3 SITE SAFETY AND HEALTH OFFICER

Identify an individual to serve as the Site Safety and Health Officer (SSHO). The SSHO shall report problems and concerns regarding health and safety to the Contracting Officer. The SSHO shall have a working knowledge of local and Federal occupational safety and health regulations, and shall provide training to Contractor employees in air monitoring practices and techniques. The SSHO shall provide day to day industrial hygiene support, including air monitoring, training, and daily site safety inspections. The SSHO shall be trained in the use of the monitoring and sampling equipment, interpretation of data required to implement the SSHP, and to administer the elements of the SSHP. The SSHO shall remain on site during project operations. The SSHO may be assigned other duties, such as project foreman or quality control manager.

3.4 SPILL AND DISCHARGE CONTROL PLAN

Develop, implement, and maintain a comprehensive spill and discharge control plan. The plan shall provide contingency measures for potential spills and discharges from handling and transportation of contaminated soils and water. A possible source of guidance for assessment and remediation is API PUBL 1628.

3.5 EXCLUSION ZONE (EZ) AND CONTAMINATION REDUCTION ZONE (CRZ)

Do not permit personnel not directly involved with the project to enter work zones, called the EZ and CRZ. The EZ shall be an area around the tank a minimum of 10 feet from the limits of the tank excavation. At the perimeter of the EZ, establish a CRZ. Limits of the CRZ shall be established by the Contractor. Within the CRZ, equipment and personnel shall be cleaned as stated in the paragraph entitled "Personnel and Equipment Decontamination." The Contractor's site office, parking area, and other support facilities shall be located outside the EZ and CRZ. Boundaries of the EZ and CRZ shall be clearly marked and posted. Include a site map, outlining the extent of work zones and location of support facilities, in the SSHP.

3.6 TRAINING

Provide health and safety training in accordance with 29 CFR 1910 prior to starting work. Furnish copies of current training certification statements for personnel prior to initial entry into the work site.

3.6.1 On-Site Training

Prior to starting on-site work, a health and safety training class shall be held by the SSHO to discuss the implementation of the SSHP. Notify the Contracting Officer 24 hours prior to beginning the training class.

3.6.2 Training Outline

Provide the following:

a. Health and safety organization, including discussion of distribution of functions and responsibilities

b. Organization and components of the SSHP

c. Physical and chemical site hazard identification

d. Basic toxicology and toxicity information

e. Discussion of the EZ and CRZ

f. Protective clothing

g. Respiratory protection

h. Air quality monitoring

i. Personnel exposure guidelines

j. Decontamination procedures

k. Basic first aid review

l. Emergency procedures and contingency plan

m. Site entry and exit procedures

n. Sampling procedures

3.7 PERSONNEL PROTECTION

Furnish appropriate personal safety equipment and protective clothing to personnel and ensure that safety equipment and protective clothing is kept clean and well maintained. Furnish three clean sets of personal protective equipment and clothing for use by the Contracting Officer or official visitors as required for entry into the EZ.

3.8 RESPIRATORY PROTECTION PROGRAM

Develop a respiratory protection program, addressing respirator usage and training, in accordance with 29 CFR 1910 and EM 385-1-1.

3.9 DECONTAMINATION

Decontaminate or properly dispose of personal protective equipment and clothing worn in contaminated areas at the end of the work day. The SSHO shall be responsible for ensuring that personal protective clothing and equipment are decontaminated before being reissued.

3.10 FIRST AID AND EMERGENCY RESPONSE EQUIPMENT AND PROCEDURES

Provide appropriate emergency first aid equipment for treatment of exposure to site physical and chemical hazards. Provide and post a list of emergency phone numbers and points of contact for fire, hospital, police, ambulance, and other necessary contacts. Provide and post a route map detailing the directions to the nearest medical facility.

3.11 IGNITION SOURCES

Do not permit ignition sources in the EZ and CRZ.

3.12 PERSONNEL AND EQUIPMENT DECONTAMINATION

Decontaminate personnel and equipment before exiting the work zones.

3.13 WASTE DISPOSAL

The SSHP shall detail the practices and procedures to be utilized to dispose of wastes. Upon completion of the project, certify that equipment and materials were properly decontaminated prior to being removed from the site.

3.14 EMERGENCY RESPONSE REQUIREMENTS

Furnish emergency response and contingency plan in accordance with 29 CFR 1910. In an emergency, take action to remove or minimize the cause of the emergency, alert the Contracting Officer, and institute necessary measures to prevent repetition of the emergency. Equip site-support vehicles with route maps providing directions to the medical treatment facility.

3.15 UNFORESEEN HAZARDS

Notify the Contracting Officer of any unforeseen hazard or condition which becomes evident during work.

3.16 ADDITIONAL REQUIREMENTS

Provide additional requirements for cleaning and vapor freeing tank as specified in Section 15177, "Petroleum Tank Cleaning."

Provide clean and vapor free tank in accordance with API RP 1604 and the following:

a. Tank Information

There is one 4000 gallon pressure relief tank near the Pumphouse and one 5000 gallon diesel tank for a 350 KW generator near the Control Building. These will be salvaged and turned over to the Government.

b. Fuel Removal

All possible fuel will be pumped or otherwise removed from the tank by the Government. Consider remaining fuel contaminated or waste fuel; Dispose of remaining fuel emulsions in accordance with applicable local, State, and Federal regulations. Drums or tanks used for containerizing waste fuel will be furnished by the Contractor. Oil/water separator for fuel will be furnished by the Government.

c. Not Used

3.17 TEMPORARY CONTAINMENT OF EXCAVATED SOIL

Provide temporary containment area near the excavated area. Cover containment area with 30 mil polyethylene sheeting. Place excavated soil on the impervious barrier and cover with 6 mil polyethylene sheeting. Provide straw bale berm around the outer limits of the containment area and cover with polyethylene sheets. Secure edges of sheets to keep the polyethylene sheeting in place.

3.18 EXCAVATION

Provide Contracting Officer with written documentation, no later than 30 days before work begins, that proper State or local authorities have been notified. Notify the Contracting Officer at least 48 hours prior to start of tank removal work. Stage operations to minimize the time that tank excavation is open and the time that contaminated soil is exposed to the weather. Provide protection measures around the excavation area to prevent water runoff and to contain the soil within the excavation area.

3.18.1 Excavation Procedures

Excavate as required to remove tanks and piping. Place soil removed from the excavation in a temporary containment area. Collect and temporarily store water runoff from stockpiled soils. Contaminated soil materials may be used as backfill for tank and pipe excavations if they meet the standards stated in 15A NCAC 2L.0115. The Contractor will provide adequate information for the State to determine the appropriate risk level - high, medium, or low - for discharges at

this site. If the State and Pope AFB CEV determine that there is a "low" risk, the soil may be used as backfill.

3.18.2 Excavation Methods

Select methods and equipment to remove soil to minimize disturbance to areas beyond the limits of the excavation area. Material that becomes contaminated as a result of the Contractor's operations shall be removed and disposed of at no additional cost to the Government. Where excavation extends into groundwater levels, dewatering methods shall be employed on a localized basis to facilitate excavation operations. Water generated by dewatering during excavation required for removal of tanks or piping, surface water collected in open excavation, or water used for washing equipment or existing concrete or bituminous surfaces, shall be collected and and treated with an oil water separator and disposed of down the sanitary sewer.

3.18.3 Structures

During excavation activities, if asphalt pavement, concrete slabs, or other structures are encountered, remove and wash with high pressure water cleaning equipment. Remove and dispose of the pavement, concrete, and other structures as specified in Section 02220 DEMOLITION.

3.19 TESTING

3.19.1 Stockpiled Soils

Soils with OVA/FID readings of 10 ppm or greater shall be further sampled and tested for TPH and for BTEX in accordance with EPA SW-846 and EPA 600/4-79/020. Samples must be collected and analyzed according to State of North Carolina UST guidance. Furnish results to the Contracting Officer within 24 hours after the results are obtained.

3.19.2 Testing Under Tank After Removal of Tank

Confirmation samples shall be collected and analyzed according to State of North Carolina UST guidance. Furnish results to the Contracting Officer within 24 hours after the results are obtained. Along with the results furnish a sketch showing underground tank, sampling location, and extent of excavations.

3.19.3 Testing Along Piping

Samples shall be collected and analyzed according to State of North Carolina UST guidance.

3.20 WATER DISPOSAL

Dewatering will be permitted only with approval of Contracting Officer. Water generated during removal of tanks and piping shall be stored and tested if required. Non-contaminated water may be disposed of on-site, after being treated with an oil-water separator.

3.21 SECURING TANK SYSTEM

a. API RP 1604. Remove stored product from the tank using one of the following methods:

(1) Drain product lines into the tanks.

(2) Remove liquids and sludge from tanks. Hydrocarbon products, sludge, and wastewater recovered from the tanks shall be the property of the Contractor and shall be disposed of in accordance with applicable Federal, State, and local requirements.

(3) Remove flammable or combustible liquids.

b. Cap the fill pipe, gage pipe, tank vapor recovery fitting, and vapor return.

c. Cap the product piping at the service station island, at associated buildings, or where indicated if pumps are removed.

d. Disconnect electric power to the pumps.

e. Leave vent piping open.

3.22 REMOVAL OF UNDERGROUND TANKS ANCHORS, SLABS, AND ASSOCIATED PIPING

3.22.1 Preparation

API RP 1604. Remove the fill pipe, gage pipe, vapor recovery truck connection, submersible pumps, and drop tube. Cap or remove non-product piping, except vent piping. Plug tank openings so that vapors will exit through vent piping during the vapor-freeing process.

3.22.2 Purging

Remove flammable vapors in accordance to API RP 1604. Tanks shall be certified as "vapor free" prior to further work.

3.22.3 Cleaning and Testing

Cleaning and tank atmosphere testing shall be in accordance with Section 15177, "Petroleum Tank Cleaning," and with API RP 1604. Distribution (product delivery) piping shall be cleaned and removed. Test the tank atmosphere and the excavation area for flammable or combustible vapor concentrations, with a combustible gas indicator until the tank is removed from the excavation and from the site.

3.22.4 Tank Removal

Plug or cap accessible holes. One plug shall have a minimum 1/8 inch vent hole. Excavate around the tank to uncover it for removal. Remove the tank from the excavation and place it on a level surface and render it useless in accordance with API RP 1604. Provide warning labels on tank if tank contained leaded fuels. Warning shall read as follows or similar wording:

"TANK HAS CONTAINED LEADED GASOLINE

NOT VAPOR FREE

NOT SUITABLE FOR STORAGE OF FOOD OR
LIQUIDS INTENDED FOR HUMAN OR ANIMAL
CONSUMPTION

DATE OF REMOVAL: MONTH/DAY/YEAR"

Make tank unusable for future use, then transport and dispose of tank in accordance with Federal, State, and local regulationsand the Contracting Officer.

3.23 INSPECTIONS

Arrange for and perform required inspections. Provide copies of inspections to Contracting Officer.

3.24 CLOSURE REPORT (SITE ASSESSMENT REPORT)

Provide the Contracting Officer a Site Assessment Report in a single binder notebook which shall contain a collection of reports, records, starting and ending dates of reporting period, inspections, documentation, and data as follows:

a. Complete UST Notification Form (within 30 days of closure).

b. Description of work, including removal procedures, number of tanks removed, identification of tanks removed and disposed of, cubic yards of excavated soil, location of disposal sites, and dates of excavation.

c. Site plan, including location of tanks and piping, limits of excavation, sampling points, results of excavation, and depths.

d. Laboratory testing reports, copies of data and test results from testing laboratory.

e. Tank disposal paperwork, contaminated soil disposal paperwork, and contaminated water disposal paperwork.

f. Certifications required by implementing agency.

g. Other permits required for underground tank removal, notifications, and inspection reports.

h. Cumulative quantities of soil excavated, beginning with start date for each tank and associated piping.

3.25 SPILLS OF CONTAMINATED SOILS

Use appropriate vehicles and operating practices to prevent spillage or leakage of contaminated materials from occurring during operations. Inspect vehicles leaving the area of contamination to ensure that no contaminated materials adhere to the wheels or undercarriage.

3.26 BACKFILL

Excavations may not be backfilled with contaminated soil unless the soil complies with risk levels established in 15A NCAC 2L.0115. Once contaminated soil is excavated, it may be considered a waste if it exceeds NCAC standards and must then be properly disposed. A permit issued by the Division of Waste Management is required if contaminated soil is treated on site. Excavations may be filled with clean compacted fill that is similar to the native soil removed from the excavations.

-- End of Section --

SECTION TABLE OF CONTENTS

DIVISION 02 - SITE WORK

SECTION 02220

DEMOLITION

05/02

PART 1 GENERAL

1.1 REFERENCES
1.2 GENERAL REQUIREMENTS
1.3 SUBMITTALS
1.4 DUST CONTROL
1.5 PROTECTION
1.5.1 Existing Work
1.5.2 Facilities
1.5.3 Protection of Personnel
1.6 BURNING
1.7 Environmental Protection
1.8 USE OF EXPLOSIVES

PART 2 PRODUCTS

PART 3 EXECUTION

3.1 EXISTING FACILITIES TO BE REMOVED
3.1.1 Structures
3.1.2 Utilities and Related Equipment
3.1.3 Paving and Slabs
3.2 FILLING
3.3 DISPOSITION OF MATERIAL
3.3.1 Title to Materials
3.3.2 Salvaged Materials and Equipment
3.3.3 Unsalvageable Material
3.4 CLEANUP

-- End of Section Table of Contents --

SECTION 02220

DEMOLITION
05/02

PART 1 GENERAL

1.1 REFERENCES

The publications listed below form a part of this specification to the extent referenced. The publications are referred to in the text by the basic designation only.

U.S. ARMY CORPS OF ENGINEERS (USACE)

EM 385-1-1	(1996) U.S. Army Corps of Engineers Safety and Health Requirements Manual

1.2 GENERAL REQUIREMENTS

The work includes demolition, salvage of identified items and materials, and removal of resulting rubbish and debris. Rubbish and debris shall be removed from the project site daily, unless otherwise directed, to avoid accumulation at the demolition site. Materials that cannot be removed daily shall be stored in areas specified by the Contracting Officer. In the interest of occupational safety and health, the work shall be performed in accordance with EM 385-1-1, Section 23, Demolition, and other applicable Sections. In the interest of conservation, salvage shall be pursued to the maximum extent possible; salvaged items and materials shall be disposed of as specified.

1.3 SUBMITTALS

Government approval is required for submittals with a "G" designation; submittals not having a "G" designation are for information only or as otherwise designated. When used, a designation following the "G" designation identifies the office that will review the submittal for the Government. The following shall be submitted in accordance with Section 01330 SUBMITTAL PROCEDURES:

SD-07 Certificates

Work Plan; G-RE

The procedures proposed for the accomplishment of the work. The procedures shall provide for safe conduct of the work, including procedures and methods to provide necessary supports, lateral bracing and shoring when required, careful removal and disposition of materials specified to be salvaged, protection of property which is to remain undisturbed, coordination with other work in progress, and timely disconnection of utility services. The procedures shall include a detailed description of the methods and equipment to be used for each operation, and the sequence of operations in accordance with EM 385-1-1.

1.4 DUST CONTROL

The amount of dust resulting from demolition shall be controlled to prevent the spread of dust to occupied portions of the construction site and to avoid creation of a nuisance in the surrounding area. Use of water will not be permitted when it will result in, or create, hazardous or objectionable conditions such as ice, flooding and pollution.

1.5 PROTECTION

1.5.1 Existing Work

Before beginning any demolition work, the Contractor shall survey the site and examine the drawings and specifications to determine the extent of the work. The Contractor shall take necessary precautions to avoid damage to existing items to remain in place, to be reused, or to remain the property of the Government; any damaged items shall be repaired or replaced as approved by the Contracting Officer. The Contractor shall coordinate the work of this section with all other work and shall construct and maintain shoring, bracing, and supports as required. The Contractor shall ensure that structural elements are not overloaded and shall be responsible for increasing structural supports or adding new supports as may be required as a result of any cutting, removal, or demolition work performed under this contract.

1.5.2 Facilities

Protect electrical and mechanical services and utilities. Where removal of existing utilities and pavement is specified or indicated, provide approved barricades, temporary covering of exposed areas, and temporary services or connections for electrical and mechanical utilities. Floors, roofs, walls, columns, pilasters, and other structural components that are designed and constructed to stand without lateral support or shoring, and are determined to be in stable condition, shall remain standing without additional bracing, shoring, of lateral support until demolished, unless directed otherwise by the Contracting Officer. The Contractor shall ensure that no elements determined to be unstable are left unsupported and shall be responsible for placing and securing bracing, shoring, or lateral supports as may be required as a result of any cutting, removal, or demolition work performed under this contract.

1.5.3 Protection of Personnel

During the demolition work the Contractor shall continuously evaluate the condition of the structure being demolished and take immediate action to protect all personnel working in and around the demolition site. No area, section, or component of floors, roofs, walls, columns, pilasters, or other structural element will be allowed to be left standing without sufficient bracing, shoring, or lateral support to prevent collapse or failure while workmen remove debris or perform other work in the immediate area.

1.6 BURNING

The use of burning at the project site for the disposal of refuse and debris will not be permitted.

1.7 Environmental Protection

The work shall comply with the requirements of Section 02013 ENVIRONMENTAL PROTECTION DURING CONSTRUCTION.

1.8 USE OF EXPLOSIVES

Use of explosives will not be permitted.

PART 2 PRODUCTS

Not used.

PART 3 EXECUTION

3.1 EXISTING FACILITIES TO BE REMOVED

3.1.1 Structures

Existing structures shall be removed as indicated. Sidewalks, curbs, gutters and street light bases shall be removed as indicated.

3.1.2 Utilities and Related Equipment

Remove existing utilities, as indicated and terminate in a manner conforming to the nationally recognized code covering the specific utility and approved by the Contracting Officer. When utility lines are encountered that are not indicated on the drawings, the Contracting Officer shall be notified prior to further work in that area.

3.1.3 Paving and Slabs

Remove sawcut concrete and asphaltic concrete paving and slabs including aggregate baseas indicated. Saw cuts shall be accomplished using a standard diamond-type blade saw. Any pavement beyond the limits of the removal area that is damaged by the Contractor's removal operations shall be removed and replaced by and at the Contractor's expense. The Contractor shall protect the new and existing pavement against all damage prior to final acceptance of the work by the Government.

3.2 FILLING

Holes, open basements and other hazardous openings shall be filled in accordance with Section 02300a EARTHWORK.

3.3 DISPOSITION OF MATERIAL

3.3.1 Title to Materials

Except where specified in other sections, all materials and equipment removed, and not reused, shall become the property of the Contractor and shall be removed from Government property. Title to materials resulting from demolition, and materials and equipment to be removed, is vested in the Contractor upon approval by the Contracting Officer of the Contractor's demolition and removal procedures, and authorization by the Contracting Officer to begin demolition. The Government will not be responsible for the condition or loss of, or damage to, such property after contract award. Materials and equipment shall not be viewed by prospective purchasers or sold on the site.

3.3.2 Salvaged Materials and Equipment

Remove materials and equipment that are indicated to be removed by the Contractor and that are to remain the property of the Government, and deliver to a storage site , as directed within 3 miles of the work site.

Contractor shall salvage items and material to the maximum extent possible.

Material salvaged for the Contractor shall be stored as approved by the Contracting Officer and shall be removed from Government property before completion of the contract. Material salvaged for the Contractor shall not be sold on the site.

Salvaged items to remain the property of the Government shall be removed in a manner to prevent damage, and packed or crated to protect the items from damage while in storage or during shipment. Items damaged during removal or storage shall be repaired or replaced to match existing items. Containers shall be properly identified as to contents.

3.3.3 Unsalvageable Material

Unsalvageable materials shall be classified as to the type of waste in accordance with federal, state, and local regulations and segregated prior to disposal. All unsalvageable construction and demolition debris shall be disposed of at the Fort Bragg demolition landfill as specified in Section 02013 ENVIRONMENTAL PROTECTION DURING CONSTRUCTION.

3.4 CLEANUP

Debris and rubbish shall be removed from basement and similar excavations. Debris shall be removed and transported in a manner that prevents spillage on streets or adjacent areas. Local regulations regarding hauling and disposal shall apply.

-- End of Section --

SECTION TABLE OF CONTENTS

DIVISION 02 - SITE WORK

SECTION 02300A

EARTHWORK

12/97

PART 1 GENERAL

1.1 REFERENCES
1.2 GENERAL
1.3 DEFINITIONS
1.3.1 Satisfactory Materials
1.3.2 Unsatisfactory Materials
1.3.3 Cohesionless and Cohesive Materials
1.3.4 Degree of Compaction
1.3.5 Acceptable Topsoil
1.4 SUBMITTALS
1.5 SUBSURFACE DATA
1.6 CLASSIFICATION OF EXCAVATION
1.6.1 Common Excavation
1.7 BLASTING

PART 2 PRODUCTS (Not Applicable)

PART 3 EXECUTION

3.1 STRIPPING OF TOPSOIL
3.2 GENERAL EXCAVATION
3.2.1 Ditches, Gutters, and Channel Changes
3.2.2 Drainage Structures
3.3 SELECTION OF BORROW MATERIAL
3.4 OPENING AND DRAINAGE OF EXCAVATION
3.5 BACKFILL
3.6 PREPARATION OF GROUND SURFACE FOR EMBANKMENTS
3.6.1 General Requirements
3.7 EMBANKMENTS
3.7.1 Earth Embankments
3.8 SUBGRADE PREPARATION
3.8.1 Construction
3.8.2 Compaction
3.8.2.1 Subgrade for Pavements
3.9 FINISHING
3.10 PLACING TOPSOIL
3.11 TESTING
3.11.1 Fill and Backfill Material Gradation
3.11.2 In-Place Densities
3.11.3 Check Tests on In-Place Densities
3.11.4 Moisture Contents
3.11.5 Optimum Moisture and Laboratory Maximum Density
3.11.6 Tolerance Tests for Subgrades
3.12 SUBGRADE AND EMBANKMENT PROTECTION
3.13 EXTENSION OF MONITORING WELLS
3.13.1 Monitoring Well Surveys

-- End of Section Table of Contents --

SECTION 02300A

EARTHWORK
12/97

PART 1 GENERAL

1.1 REFERENCES

The publications listed below form a part of this specification to the extent referenced. The publications are referred to in the text by basic designation only.

AMERICAN ASSOCIATION OF STATE HIGHWAY AND TRANSPORTATION OFFICIALS (AASHTO)

AASHTO T 180	(1997) Moisture-Density Relations of Soils Using a 4.54-kg (10-lb) Rammer and an 457 mm (18-in) Drop
AASHTO T 224	(1996) Correction for Coarse Particles in the Soil Compaction Test

AMERICAN SOCIETY FOR TESTING AND MATERIALS (ASTM)

ASTM C 136	(1996a) Sieve Analysis of Fine and Coarse Aggregates
ASTM D 422	(1963; R 1998) Particle-Size Analysis of Soils
ASTM D 1140	(1997) Amount of Material in Soils Finer than the No. 200 (75-micrometer) Sieve
ASTM D 1556	(1990; R 1996el) Density and Unit Weight of Soil in Place by the Sand-Cone Method
ASTM D 1557	(1991; R 1998) Laboratory Compaction Characteristics of Soil Using Modified Effort (56,000 ft-lbf/cu. ft. (2,700 kN-m/cu. m.))
ASTM D 2167	(1994) Density and Unit Weight of Soil in Place by the Rubber Balloon Method
ASTM D 2487	(1998) Classification of Soils for Engineering Purposes (Unified Soil Classification System)
ASTM D 2922	(1996el) Density of Soil and Soil-Aggregate in Place by Nuclear Methods (Shallow Depth)
ASTM D 3017	(1988; R 1996el) Water Content of Soil and Rock in Place by Nuclear Methods (Shallow Depth)
ASTM D 4318	(1998) Liquid Limit, Plastic Limit, and Plasticity Index of Soils

1.2 GENERAL

This guide specification covers the requirements for excavating, embankment, preparation of subgrades and grading for roadways, containment basins including

excavation, filling, and shaping of drainageways. See Section 02315a EXCAVATION, FILLING AND BACKFILLING FOR BUILDINGS for excavation, filling and backfilling, dewatering, shoring, and grading for buildings and storage tanks to within 5 feet outside of each building or structure. See Section 02316a EXCAVATION, TRENCHING, AND BACKFILLING FOR UTILITIES SYSTEMS for excavation, trenching, and backfilling for utilities systems to the points of connection within 5 feet of the buildings.

1.3 DEFINITIONS

1.3.1 Satisfactory Materials

Satisfactory materials shall comprise any materials classified by ASTM D 2487 as GW, GP, GM, GP-GM, GW-GM, GC, GP-GC, GM-GC, SW, SP, SM, SW-SM, SC, SW-SC, SP-SM, SP-SC, CL. Satisfactory materials for grading shall be comprised of stones less than 8 inches, except for fill material for pavements and railroads which shall be comprised of stones less than 3 inches in any dimension.

1.3.2 Unsatisfactory Materials

Materials which do not comply with the requirements for satisfactory materials are unsatisfactory. Unsatisfactory materials also include man-made fills; trash; refuse; backfills from previous construction; and material classified as satisfactory which contains root and other organic matter or frozen material. The Contracting Officer shall be notified of any contaminated materials.

1.3.3 Cohesionless and Cohesive Materials

Cohesionless materials include materials classified in ASTM D 2487 as GW, GP, SW, and SP. Cohesive materials include materials classified as GC, SC, ML, CL, MH, and CH. Materials classified as GM and SM will be identified as cohesionless only when the fines are nonplastic. Testing required for classifying materials shall be in accordance with ASTM D 4318, ASTM C 136, ASTM D 422, and ASTM D 1140.

1.3.4 Degree of Compaction

Degree of compaction required, except as noted in the second sentence, is expressed as a percentage of the maximum density obtained by the test procedure presented in ASTM D 1557abbreviated as a percent of laboratory maximum density. Since ASTM D 1557 applies only to soils that have 30 percent or less by weight of their particles retained on the 3/4 inch sieve, the degree of compaction for material having more than 30 percent by weight of their particles retained on the 3/4 inch sieve shall be expressed as a percentage of the maximum density in accordance with AASHTO T 180 Method D and corrected with AASHTO T 224. To maintain the same percentage of coarse material, the "remove and replace" procedure as described in the NOTE 8 in Paragraph 7.2 of AASHTO T 180 shall be used.

1.3.5 Acceptable Topsoil

Acceptable topsoil is defined as selectively excavated natural, friable soil that is representative of soils in the vicinity that produce heavy growths of crops, grass or other vegetation and is reasonably free from underlying subsoil, clay lumps, objectionable weeds, litter, brush, matted roots, toxic substances or any material that might be harmful to plant growth or be a hindrance to grading, planting or maintenance operations. Soil from ditch bottoms, drained ponds, eroded areas, or soil which is excessively wet or saturated is not acceptable. Topsoil shall not contain more than five percent by volume of stones, stumps or other objects larger than 1 inch in any dimension for field seeded areas and 1/2 inch in any dimension for lawn seeded areas. Topsoil shall not be excessively acid or alkaline (pH value 6.0 to 7.5). Topsoil shall be approved by the Contracting Officer. See Section 02921a SEEDING for additional

requirements. See Section 02930a EXTERIOR PLANTING for additional requirements.

1.4 SUBMITTALS

Government approval is required for submittals with a "G" designation; submittals not having a "G" designation are for information only. When used, a designation following the "G" designation identifies the office that will review the submittal for the Government. The following shall be submitted in accordance with Section 01330 SUBMITTAL PROCEDURES:

SD-01 Preconstruction Submittals

Monitoring Well Extension Plan; G-RE.

The plan shall include, at a minimum, the following:

a. Procedures for removing/cutting off existing well features in preparation of installing extension materials.

b. Procedures for joining additional riser pipe, placing the well seal, and setting the flush-mount well cover.

c. Catalog cuts for riser pipe, flush-mount well cover, and well seal materials.

SD-03 Product Data

Earthwork; G-RE.

Procedure and location for disposal of unused satisfactory, unsatisfactory and contaminated material.

SD-06 Test Reports

Testing;

Within 24 hours of conclusion of physical tests, 2 copies of test results, including calibration curves and results of calibration tests.

Surveys and Installation Report;

Description of the work performed, procedures used to accomplish the work, well installation diagrams which show the new as-built condition of the wells, and the new top of casing elevations. Original or a legible reproducible copy of the surveys and field books shall be included.

SD-07 Certificates

Testing;

Qualifications of the commercial testing laboratory or Contractor's testing facilities.

1.5 SUBSURFACE DATA

Subsurface soil boring logs are shown on the drawings. These data represent the best subsurface information available; however, variations may exist in the subsurface between boring locations.

1.6 CLASSIFICATION OF EXCAVATION

No consideration will be given to the nature of the materials, and all

excavation will be designated as unclassified excavation.

1.6.1 Common Excavation

Common excavation shall include the satisfactory removal and disposal of all materials.

1.7 BLASTING

Blasting will not be permitted.

PART 2 PRODUCTS (Not Applicable)

PART 3 EXECUTION

3.1 STRIPPING OF TOPSOIL

Topsoil shall be stripped to a depth of 4 inches. Topsoil shall be spread on areas already graded and prepared for topsoil, or transported and deposited in stockpiles convenient to areas that are to receive application of the topsoil later, or at locations indicated or specified. Topsoil shall be kept separate from other excavated materials, brush, litter, objectionable weeds, roots, stones larger than 2 inches in diameter, and other materials that would interfere with planting and maintenance operations.

3.2 GENERAL EXCAVATION

The Contractor shall perform excavation of every type of material encountered within the limits of the project to the lines, grades, and elevations indicated and as specified. Grading shall be in conformity with the typical sections shown and the tolerances specified in paragraph FINISHING. Satisfactory excavated materials shall be transported to and placed in fill or embankment within the limits of the work. Unsatisfactory materials encountered within the limits of the work shall be excavated below grade and replaced with satisfactory materials as directed. Such excavated material and the satisfactory material ordered as replacement shall be included in excavation. Surplus satisfactory excavated material not required for fill or embankment shall be disposed of outside the limits of Government controlled land and in accordance with Section 01450 CHEMICAL DATA QUALITY CONTROL. Unsatisfactory material and surplus satisfactory excavated material not required for fill or embankment shall be disposed of outside the limits of Government controlled land and in accordance with Section 01450 CHEMICAL DATA QUALITY CONTROL. During construction, excavation and fill shall be performed in a manner and sequence that will provide proper drainage at all times. Material required for fill or embankment in excess of that produced by excavation within the grading limits shall be excavated from other approved areas selected by the Contractor as specified.

3.2.1 Ditches, Gutters, and Channel Changes

Excavation of ditches, gutters, and channel changes shall be accomplished by cutting accurately to the cross sections, grades, and elevations shown. Ditches and gutters shall not be excavated below grades shown. Excessive open ditch or gutter excavation shall be backfilled with satisfactory, thoroughly compacted, material or with suitable stone or cobble to grades shown. Material excavated shall be disposed of as shown or as directed, except that in no case shall material be deposited less than 4 feet from the edge of a ditch. The Contractor shall maintain excavations free from detrimental quantities of leaves, brush, sticks, trash, and other debris until final acceptance of the work.

3.2.2 Drainage Structures

Excavations shall be made to the lines, grades, and elevations shown, or as

directed. Trenches and foundation pits shall be of sufficient size to permit the placement and removal of forms for the full length and width of structure footings and foundations as shown. Rock or other hard foundation material shall be cleaned of loose debris and cut to a firm, level, stepped, or serrated surface. Loose disintegrated rock and thin strata shall be removed. When concrete or masonry is to be placed in an excavated area, the bottom of the excavation shall not be disturbed. Excavation to the final grade level shall not be made until just before the concrete or masonry is to be placed.

3.3 SELECTION OF BORROW MATERIAL

Borrow material shall be selected to meet the requirements and conditions of the particular fill or embankment for which it is to be used. Borrow material shall be obtained from approved private sources. Unless otherwise provided in the contract, the Contractor shall obtain from the owners the right to procure material, pay royalties and other charges involved, and bear the expense of developing the sources, including rights-of-way for hauling. Unless specifically provided, no borrow shall be obtained within the limits of the project site without prior written approval. Necessary clearing, grubbing, and satisfactory drainage of borrow pits and the disposal of debris thereon shall be considered related operations to the borrow excavation.

3.4 OPENING AND DRAINAGE OF EXCAVATION

Except as otherwise permitted, excavation areas shall be excavated providing adequate drainage. Overburden and other spoil material shall be transported to designated spoil areas or otherwise disposed of as directed. The Contractor shall ensure that excavation of any area, or dumping of spoil material results in minimum detrimental effects on natural environmental conditions.

3.5 BACKFILL

Backfill adjacent to any and all types of structures shall be placed and compacted to at least 90 percent laboratory maximum density for cohesive materials or 95 percent laboratory maximum density for cohesionless materials to prevent wedging action or eccentric loading upon or against the structure. Ground surface on which backfill is to be placed shall be prepared as specified in paragraph PREPARATION OF GROUND SURFACE FOR EMBANKMENTS. Compaction requirements for backfill materials shall also conform to the applicable portions of paragraphs PREPARATION OF GROUND SURFACE FOR EMBANKMENTS, EMBANKMENTS, and SUBGRADE PREPARATION, and Section 02316a EXCAVATION, TRENCHING, AND BACKFILLING FOR UTILITIES SYSTEMS. Compaction shall be accomplished by sheepsfoot rollers, pneumatic-tired rollers, steel-wheeled rollers, vibratory compactors, or other approved equipment.

3.6 PREPARATION OF GROUND SURFACE FOR EMBANKMENTS

3.6.1 General Requirements

Ground surface on which fill is to be placed shall be stripped of live, dead, or decayed vegetation, rubbish, debris, and other unsatisfactory material; plowed, disked, or otherwise broken up to a depth of 6 inches; pulverized; moistened or aerated as necessary; thoroughly mixed; and compacted to at least 90 percent laboratory maximum density for cohesive materials or 95 percent laboratory maximum density for cohesionless materials. Compaction shall be accomplished by sheepsfoot rollers, pneumatic-tired rollers, steel-wheeled rollers, vibratory compactors, or other approved equipment. The prepared ground surface shall be scarified and moistened or aerated as required just prior to placement of embankment materials to assure adequate bond between embankment material and the prepared ground surface.

3.7 EMBANKMENTS

3.7.1 Earth Embankments

Earth embankments shall be constructed from satisfactory materials free of organic or frozen material and rocks with any dimension greater than 3 inches. The material shall be placed in successive horizontal layers of loose material not more than12 inches in depth. Each layer shall be spread uniformly on a soil surface that has been moistened or aerated as necessary, and scarified or otherwise broken up so that the fill will bond with the surface on which it is placed. After spreading, each layer shall be plowed, disked, or otherwise broken up; moistened or aerated as necessary; thoroughly mixed; and compacted to at least 90 percent laboratory maximum density for cohesive materials or 95 percent laboratory maximum density for cohesionless materials. Compaction requirements for the upper portion of earth embankments forming subgrade for pavements shall be identical with those requirements specified in paragraph SUBGRADE PREPARATION. Compaction shall be accomplished by sheepsfoot rollers, pneumatic-tired rollers, steel-wheeled rollers, vibratory compactors, or other approved equipment.

3.8 SUBGRADE PREPARATION

3.8.1 Construction

Subgrade shall be shaped to line, grade, and cross section, and compacted as specified. This operation shall include plowing, disking, and any moistening or aerating required to obtain specified compaction. Soft or otherwise unsatisfactory material shall be removed and replaced with satisfactory excavated material or other approved material as directed. Rock encountered in the cut section shall be excavated to a depth of 6 inches below finished grade for the subgrade. Low areas resulting from removal of unsatisfactory material or excavation of rock shall be brought up to required grade with satisfactory materials, and the entire subgrade shall be shaped to line, grade, and cross section and compacted as specified. After rolling, the surface of the subgrade for roadways shall not show deviations greater than 1/4 inch when tested with a 10 foot straightedge applied both parallel and at right angles to the centerline of the area. The elevation of the finish subgrade shall not vary more than 0.05 foot from the established grade and cross section.

3.8.2 Compaction

Compaction shall be accomplished by sheepsfoot rollers, pneumatic-tired rollers, steel-wheeled rollers, vibratory compactors, or other approved equipment.

3.8.2.1 Subgrade for Pavements

Subgrade for pavements shall be compacted to at least 95 percentage laboratory maximum density for the depth below the surface of the pavement shown. When more than one soil classification is present in the subgrade, the top 6 inches of subgrade shall be scarified, windrowed, thoroughly blended, reshaped, and compacted.

3.9 FINISHING

The surface of excavations, embankments, and subgrades shall be finished to a smooth and compact surface in accordance with the lines, grades, and cross sections or elevations shown. The degree of finish for graded areas shall be within 0.1 foot of the grades and elevations indicated except that the degree of finish for subgrades shall be specified in paragraph SUBGRADE PREPARATION. Gutters and ditches shall be finished in a manner that will result in effective drainage. The surface of areas to be turfed shall be finished to a smoothness suitable for the application of turfing materials.

3.10 PLACING TOPSOIL

On areas to receive topsoil, the compacted subgrade soil shall be scarified to a 2 inch depth for bonding of topsoil with subsoil. Topsoil then shall be spread evenly to a thickness of 4 inches and graded to the elevations and slopes shown. Additional topsoil shall be placed in the vicinity of the POL Operaions Building as indicated on the Landscape Drawings. Topsoil shall not be spread when frozen or excessively wet or dry. See Section 02921a SEEDING for additional topsoil requirements.

3.11 TESTING

Testing shall be performed by an approved commercial testing laboratory or by the Contractor subject to approval. If the Contractor elects to establish testing facilities, no work requiring testing will be permitted until the Contractor's facilities have been inspected and approved by the Contracting Officer. Field in-place density shall be determined in accordance with ASTM D 1556, ASTM D 2167 or ASTM D 2922. When ASTM D 2922 is used, the calibration curves shall be checked and adjusted using only the sand cone method as described in ASTM D 1556. ASTM D 2922results in a wet unit weight of soil and when using this method ASTM D 3017 shall be used to determine the moisture content of the soil. The calibration curves furnished with the moisture gauges shall also be checked along with density calibration checks as described in ASTM D 3017; the calibration checks of both the density and moisture gauges shall be made at the beginning of a job on each different type of material encountered and at intervals as directed by the Contracting Officer. When test results indicate, as determined by the Contracting Officer, that compaction is not as specified, the material shall be removed, replaced and recompacted to meet specification requirements. Tests on recompacted areas shall be performed to determine conformance with specification requirements. Inspections and test results shall be certified by a registered professional civil engineer. These certifications shall state that the tests and observations were performed by or under the direct supervision of the engineer and that the results are representative of the materials or conditions being certified by the tests. The following number of tests, if performed at the appropriate time, will be the minimum acceptable for each type operation.

3.11.1 Fill and Backfill Material Gradation

One test per 1000 cubic yards stockpiled or in-place source material. Gradation of fill and backfill material shall be determined in accordance with ASTM D 422.

3.11.2 In-Place Densities

a. One test per 25,000 square feet, or fraction thereof, of each lift of fill or backfill areas compacted by other than hand-operated machines.

b. One test per 5,000 square feet, or fraction thereof, of each lift of fill or backfill areas compacted by hand-operated machines.

c. One test per 250 linear feet, or fraction thereof, of each lift of embankment or backfill for roads .

3.11.3 Check Tests on In-Place Densities

If ASTM D 2922 is used, in-place densities shall be checked by ASTM D 1556 as follows:

a. One check test per lift for each 150,000 square feet, or fraction thereof, of each lift of fill or backfill compacted by other than hand-operated machines.

b. One check test per lift for each 30,000 square feet, of fill or

backfill areas compacted by hand-operated machines.

c. One check test per lift for each 1,500 linear feet, or fraction thereof, of embankment or backfill for roads.

3.11.4 Moisture Contents

In the stockpile, excavation, or borrow areas, a minimum of two tests per day per type of material or source of material being placed during stable weather conditions shall be performed. During unstable weather, tests shall be made as dictated by local conditions and approved by the Contracting Officer.

3.11.5 Optimum Moisture and Laboratory Maximum Density

Tests shall be made for each type material or source of material including borrow material to determine the optimum moisture and laboratory maximum density values. One representative test per 1000 cubic yards of fill and backfill, or when any change in material occurs which may affect the optimum moisture content or laboratory maximum density.

3.11.6 Tolerance Tests for Subgrades

Continuous checks on the degree of finish specified in paragraph SUBGRADE PREPARATION shall be made during construction of the subgrades.

3.12 SUBGRADE AND EMBANKMENT PROTECTION

During construction, embankments and excavations shall be kept shaped and drained. Ditches and drains along subgrade shall be maintained to drain effectively at all times. The finished subgrade shall not be disturbed by traffic or other operation and shall be protected and maintained by the Contractor in a satisfactory condition until ballast, subbase, base, or pavement is placed. The storage or stockpiling of materials on the finished subgrade will not be permitted. No subbase, base course, ballast, or pavement shall be laid until the subgrade has been checked and approved, and in no case shall subbase, base, surfacing, pavement, or ballast be placed on a muddy, spongy, or frozen subgrade.

3.13 EXTENSION OF MONITORING WELLS

Two monitoring wells shall be extended to finished grade as shown on the drawings. The extension riser pipe shall be made of the same material as the existing riser pipe (2-inch PVC). The extension riser pipe shall be connected to the existing riser in such a manner as to provide a smooth, flush joint, inside connection using a PVC slip coupling, or other suitable means, without the use of adhesives or solvents. The design of the flush-mount well cover shall be such that it will support anticipated vehicle loads. Contractor shall submit a Monitoring Well Extension Plan for approval prior to start of work.

3.13.1 Monitoring Well Surveys

The two extended wells shall be surveyed to establish the existing and new top of casing elevations. Contractor shall perform the required surveys and provide the original, or a legible reproducible copy, of the surveys and field books. The survey shall establish the elevations for each modified monitoring well. The elevation of the top of the well riser to the closest 0.01 foot shall be obtained at each well.

-- End of Section --

SECTION TABLE OF CONTENTS

DIVISION 02 - SITE WORK

SECTION 02315A

EXCAVATION, FILLING AND BACKFILLING FOR BUILDINGS

08/98

PART 1 GENERAL

1.1 REFERENCES
1.2 DEGREE OF COMPACTION
1.3 SUBMITTALS

PART 2 PRODUCTS

2.1 MATERIALS
2.1.1 Satisfactory Materials
2.1.2 Unsatisfactory Materials
2.1.3 Cohesionless and Cohesive Materials
2.1.4 Expansive Soils
2.2 CAPILLARY WATER BARRIER

PART 3 EXECUTION

3.1 CLEARING AND GRUBBING
3.2 TOPSOIL
3.3 EXCAVATION
3.4 DRAINAGE AND DEWATERING
3.4.1 Drainage
3.4.2 Dewatering
3.5 SHORING
3.6 CLASSIFICATION OF EXCAVATION
3.7 BLASTING
3.8 UTILITY AND DRAIN TRENCHES
3.9 BORROW
3.10 EXCAVATED MATERIALS
3.11 FINAL GRADE OF SURFACES TO SUPPORT CONCRETE
3.12 SUBGRADE PREPARATION
3.13 FILLING AND BACKFILLING
3.14 TESTING
3.14.1 In-Place Densities
3.14.1.1 In-Place Density of Subgrades
3.14.1.2 In-Place Density of Fills and Backfills
3.14.2 Moisture Content
3.14.3 Optimum Moisture and Laboratory Maximum Density
3.15 CAPILLARY WATER BARRIER
3.16 GRADING
3.17 SPREADING TOPSOIL
3.18 PROTECTION

-- End of Section Table of Contents --

SECTION 02315A

EXCAVATION, FILLING AND BACKFILLING FOR BUILDINGS
08/98

PART 1 GENERAL

1.1 REFERENCES

The publications listed below form a part of this specification to the extent referenced. The publications are referred to in the text by basic designation only.

AMERICAN SOCIETY FOR TESTING AND MATERIALS (ASTM)

ASTM D 1556	(1990; R 1996e1) Density and Unit Weight of Soil in Place by the Sand-Cone Method
ASTM D 1557	(1991; R 1998) Laboratory Compaction Characteristics of Soil Using Modified Effort (56,000 ft-lbf/cu. ft. (2,700 kN-m/cu.m.))
ASTM D 2167	(1994) Density and Unit Weight of Soil in Place by the Rubber Balloon Method
ASTM D 2216	(1998) Laboratory Determination of Water (Moisture) Content of Soil and Rock
ASTM D 2487	(1998) Classification of Soils for Engineering Purposes (Unified Soil Classification System)
ASTM D 2922	(1996e1) Density of Soil and Soil-Aggregate in Place by Nuclear Methods (Shallow Depth)
ASTM D 2937	(1994) Density of Soil in Place by the Drive-Cylinder Method
ASTM D 3017	(1988; R 1996el) Water Content of Soil and Rock in Place by Nuclear Methods (Shallow Depth)
ASTM D 4318	(1998) Liquid Limit, Plastic Limit, and Plasticity Index of Soils

1.2 DEGREE OF COMPACTION

Degree of compaction is expressed as a percentage of the maximum density obtained by the test procedure presented in ASTM D 1557, abbreviated as percent laboratory maximum density.

1.3 SUBMITTALS

Government approval is required for submittals with a "G" designation; submittals not having a "G" designation are for information only. When used, a designation following the "G" designation identifies the office that will review the submittal for the Government. The following shall be submitted in accordance with Section 01330 SUBMITTAL PROCEDURES:

SD-06 Test Reports

Testing; G-RE

Copies of all laboratory and field test reports within 24 hours of the completion of the test.

PART 2 PRODUCTS

2.1 MATERIALS

2.1.1 Satisfactory Materials

Satisfactory materials shall comprise any materials classified by ASTM D 2487 as GW, GP, GM, GP-GM, GW-GM, GC, GP-GC, GM-GC, SW, SP, SM, SW-SM, SC, SW-SC, SP-SM, SP-SC, CL.

2.1.2 Unsatisfactory Materials

Materials which do not comply with the requirements for satisfactory materials are unsatisfactory. Unsatisfactory materials also include man-made fills, trash, refuse, or backfills from previous construction. Unsatisfactory material also includes material classified as satisfactory which contains root and other organic matter, frozen material, and stones larger than 3 inches. The Contracting Officer shall be notified of any contaminated materials.

2.1.3 Cohesionless and Cohesive Materials

Cohesionless materials include materials classified in ASTM D 2487 as GW, GP, SW, and SP. Cohesive materials include materials classified as GC, SC, ML, CL, MH, and CH. Materials classified as GM, GP-GM, GW-GM, SW-SM, SP-SM, and SM shall be identified as cohesionless only when the fines are nonplastic.

2.1.4 Expansive Soils

Expansive soils are defined as soils that have a liquid limit equal to or greater than 50 and a plasticity index equal to or greater than 25 when tested in accordance with ASTM D 4318.

2.2 CAPILLARY WATER BARRIER

Capillary Water Barrier shall consist of clean, crushed, nonporous rock, crushed gravel, or uncrushed gravel. The maximum particle size shall be 1-1/2 inches and no more than 2 percent by weight shall pass the No. 4 size sieve.

PART 3 EXECUTION

3.1 CLEARING AND GRUBBING

The areas within lines 5 feet outside of each building and structure line shall be cleared and grubbed of trees, stumps, roots, brush and other vegetation, debris, existing foundations, pavements, utility lines, structures, fences, and other items that would interfere with construction operations. Stumps, logs, roots, and other organic matter shall be completely removed and the resulting depressions shall be filled with satisfactory material, placed and compacted in accordance with paragraph FILLING AND BACKFILLING. Materials removed shall be disposed of in the designated waste disposal areas .

3.2 TOPSOIL

Topsoil shall be stripped to a depth of 4 inches below existing grade within the designated excavations and grading lines and deposited in storage piles for later use. Excess topsoil shall be disposed as specified for excess excavated material.

3.3 EXCAVATION

Excavation shall conform to the dimensions and elevations indicated for each building, structure, and footing except as specified, and shall include trenching for utility and foundation drainage systems to a point 5 feet beyond the building line of each building and structure, and all work incidental thereof. Excavation shall extend a sufficient distance from walls and footings to allow for placing and removal of forms. Excavations below indicated depths will not be permitted except to remove unsatisfactory material. Unsatisfactory material encountered below the grades shown shall be replaced with satisfactory material; and payment will be made in conformance with the CHANGES clause of the CONTRACT CLAUSES. Satisfactory material removed below the depths indicated, without specific direction of the Contracting Officer, shall be replaced, at no additional cost to the Government, with satisfactory materials to the indicated excavation grade; except that concrete footings shall be increased in thickness to the bottom of the overdepth excavations and over-break in rock excavation. Satisfactory material shall be placed and compacted as specified in paragraph FILLING AND BACKFILLING. Determination of elevations and measurements of approved overdepth excavation of unsatisfactory material below grades indicated shall be done under the direction of the Contracting Officer.

3.4 DRAINAGE AND DEWATERING

3.4.1 Drainage

Surface water shall be directed away from excavation and construction sites to prevent erosion and undermining of foundations. Diversion ditches, dikes and grading shall be provided and maintained as necessary during construction. Excavated slopes and backfill surfaces shall be protected to prevent erosion and sloughing. Excavation shall be performed so that the site, the area immediately surrounding the site, and the area affecting operations at the site shall be continually and effectively drained.

3.4.2 Dewatering

Groundwater flowing toward or into excavations shall be controlled to prevent sloughing of excavation slopes and walls, boils, uplift and heave in the excavation and to eliminate interference with orderly progress of construction. French drains, sumps, ditches or trenches will not be permitted within 3 feet of the foundation of any structure, except with specific written approval, and after specific contractual provisions for restoration of the foundation area have been made. Control measures shall be taken by the time the excavation reaches the water level in order to maintain the integrity of the in situ material. While the excavation is open, the water level shall be maintained continuously, at least 2 feet below the working level.

3.5 SHORING

Shoring, including sheet piling, shall be furnished and installed as necessary to protect workmen, banks, adjacent paving, structures, and utilities. Shoring, bracing, and sheeting shall be removed as excavations are backfilled, in a manner to prevent caving.

3.6 CLASSIFICATION OF EXCAVATION

Excavation will be unclassified regardless of the nature of material encountered.

3.7 BLASTING

Blasting will not be permitted.

3.8 UTILITY AND DRAIN TRENCHES

Trenches for underground utilities systems and drain lines shall be excavated to the required alignments and depths. The bottoms of trenches shall be graded to secure the required slope and shall be tamped if necessary to provide a firm pipe bed. Recesses shall be excavated to accommodate bells and joints so that pipe will be uniformly supported for the entire length. Rock, where encountered, shall be excavated to a depth of at least 6 inches below the bottom of the pipe, and the overdepth shall be backfilled with satisfactory material placed and compacted in conformance with paragraph FILLING AND BACKFILLING.

3.9 BORROW

Where satisfactory materials are not available in sufficient quantity from required excavations, approved materials shall be obtained as specified in Section 02300a EARTHWORK .

3.10 EXCAVATED MATERIALS

Satisfactory excavated material required for fill or backfill shall be placed in the proper section of the permanent work required under this section or shall be separately stockpiled if it cannot be readily placed. Satisfactory material in excess of that required for the permanent work and all unsatisfactory material shall be disposed of as specified in Section 02300a EARTHWORK .

3.11 FINAL GRADE OF SURFACES TO SUPPORT CONCRETE

Excavation to final grade shall not be made until just before concrete is to be placed. Approximately level surfaces shall be roughened, and sloped surfaces shall be cut as indicated into rough steps or benches to provide a satisfactory bond.

3.12 SUBGRADE PREPARATION

Unsatisfactory material in surfaces to receive fill or in excavated areas shall be removed and replaced with satisfactory materials as directed by the Contracting Officer. The surface shall be scarified to a depth of 6 inches before the fill is started. Sloped surfaces steeper than 1 vertical to 4 horizontal shall be plowed, stepped, benched, or broken up so that the fill material will bond with the existing material. When subgrades are less than the specified density, the ground surface shall be broken up to a minimum depth of 6 inches, pulverized, and compacted to the specified density. When the subgrade is part fill and part excavation or natural ground, the excavated or natural ground portion shall be scarified to a depth of 12 inches and compacted as specified for the adjacent fill. Material shall not be placed on surfaces that are muddy, frozen, or contain frost. Compaction shall be accomplished by sheepsfoot rollers, pneumatic-tired rollers, steel-wheeled rollers, or other approved equipment well suited to the soil being compacted. Material shall be moistened or aerated as necessary to provide the moisture content that will readily facilitate obtaining the specified compaction with the equipment used. Minimum subgrade density shall be as specified in paragraph FILLING AND BACKFILLING.

3.13 FILLING AND BACKFILLING

Satisfactory materials shall be used in bringing fills and backfills to the lines and grades indicated and for replacing unsatisfactory materials. Satisfactory materials shall be placed in horizontal layers not exceeding 8 inches in loose thickness, or 6 inches when hand-operated compactors are used. After placing, each layer shall be plowed, disked, or otherwise broken up, moistened or aerated as necessary, thoroughly mixed and compacted as specified. Backfilling shall not begin until construction below finish grade has been approved, underground utilities systems have been inspected, tested and approved, forms removed, and the excavation cleaned of trash and debris.

Backfill shall be brought to indicated finish grade. Backfill shall not be placed in wet or frozen areas. Where pipe is coated or wrapped for protection against corrosion, the backfill material up to an elevation 2 feet above sewer lines and 1 foot above other utility lines shall be free from stones larger than 1 inch in any dimension. Heavy equipment for spreading and compacting backfill shall not be operated closer to foundation or retaining walls than a distance equal to the height of backfill above the top of footing; the area remaining shall be compacted in layers not more than 4 inches in compacted thickness with power-driven hand tampers suitable for the material being compacted. Backfill shall be placed carefully around pipes or tanks to avoid damage to coatings, wrappings, or tanks. Backfill shall not be placed against foundation walls prior to 7 days after completion of the walls. As far as practicable, backfill shall be brought up evenly on each side of the wall and sloped to drain away from the wall. Each layer of fill and backfill shall be compacted to not less than the percentage of maximum density specified below:

	Percent Laboratory maximum density	
	Cohesive material	Cohesionless material
Fill, embankment, and backfill		
Under structures, building slabs, steps, paved areas, around footings, and in trenches	90	95
Under sidewalks and grassed areas	85	90
Subgrade		
Under building slabs, steps, and paved areas, top 12 inches	90	95
Under sidewalks, top 6 inches	85	90

Approved compacted subgrades that are disturbed by the Contractor's operations or adverse weather shall be scarified and compacted as specified herein before to the required density prior to further construction thereon. Recompaction over underground utilities and heating lines shall be by hand tamping.

3.14 TESTING

Testing shall be the responsibility of the Contractor and shall be performed at no additional cost to the Government. Testing shall be performed by an approved commercial testing laboratory or may be performed by the Contractor subject to approval. Field in-place density shall be determined in accordance with ASTM D 1556, ASTM D 2167, or ASTM D 2922. When ASTM D 2922 is used, the calibration curves shall be checked and adjusted if necessary by the procedure described in ASTM D 2922, paragraph ADJUSTING CALIBRATION CURVE. ASTM D 2922 results in a wet unit weight of soil and when using this method ASTM D 3017 shall be used to determine the moisture content of the soil. The calibration curves furnished with the moisture gauges shall also be checked along with density calibration checks as described in ASTM D 3017. The calibration checks of both the density and moisture gauges shall be made at the beginning of a job on each different type of material encountered and at intervals as directed by the Contracting Officer. ASTM D 2937 shall be used only for soft, fine-grained, cohesive soils. The following number of tests, if performed at the appropriate

time, shall be the minimum acceptable for each type operation.

3.14.1 In-Place Densities

In-place density and moisture content test results shall be included with the Contractor's daily construction quality control reports.

3.14.1.1 In-Place Density of Subgrades

One test per 5,000 square foot or fraction thereof.

3.14.1.2 In-Place Density of Fills and Backfills

One test per 2,500 square foot or fraction thereof of each lift for fill or backfill areas compacted by other than hand or hand-operated machines. The density for each lift of fill or backfill materials for trenches, pits, building perimeters or other structures or areas less than 10 feet in width, which are compacted with hand or hand-operated machines shall be tested as follows: One test per each area less than 1,000 square feet, or one test for each 250 linear foot of long narrow fills 250 feet or more in length. If ASTM D 2922 is used, in-place densities shall be checked by ASTM D 1556 as follows: One check per every 10 tests by ASTM D 2922.

3.14.2 Moisture Content

In the stockpile, excavation or borrow areas, a minimum of two tests per day per type of material or source of materials being placed is required during stable weather conditions. During unstable weather, tests shall be made as dictated by local conditions and approved moisture content shall be tested in accordance with ASTM D 2216.

3.14.3 Optimum Moisture and Laboratory Maximum Density

Tests shall be made for each type material or source of material, including borrow material to determine the optimum moisture and laboratory maximum density values. One representative test per 1000 cubic yards of fill and backfill, or when any change in material occurs which may affect the optimum moisture content or laboratory maximum density will be made.

3.15 CAPILLARY WATER BARRIER

Capillary water barrier under concrete floor and area-way slabs on grade shall be placed directly on the subgrade and shall be compacted with a minimum of two passes of a hand-operated plate-type vibratory compactor.

3.16 GRADING

Areas within 5 feet outside of each building and structure line shall be constructed true-to-grade, shaped to drain, and shall be maintained free of trash and debris until final inspection has been completed and the work has been accepted.

3.17 SPREADING TOPSOIL

Areas outside the building lines from which topsoil has been removed shall be topsoiled. The surface shall be free of materials that would hinder planting or maintenance operations. The subgrade shall be pulverized to a depth of 2 inches by disking or plowing for the bonding of topsoil with the subsoil. Topsoil shall then be uniformly spread, graded, and compacted to the thickness, elevations, slopes shown, and left free of surface irregularities. Topsoil shall be compacted by one pass of a cultipacker, roller, or other approved equipment weighing 100 to 160 pounds per linear foot of roller. Topsoil shall not be placed when the subgrade is frozen, excessively wet, extremely dry, or in

a condition otherwise detrimental to seeding, planting, or proper grading.

3.18 PROTECTION

Settlement or washing that occurs in graded, topsoiled, or backfilled areas prior to acceptance of the work, shall be repaired and grades reestablished to the required elevations and slopes.

-- End of Section --

SECTION TABLE OF CONTENTS

DIVISION 02 - SITE WORK

SECTION 02316A

EXCAVATION, TRENCHING, AND BACKFILLING FOR UTILITIES SYSTEMS

11/97

PART 1 GENERAL

1.1 REFERENCES
1.2 GENERAL
1.3 DEGREE OF COMPACTION
1.4 SUBMITTALS

PART 2 PRODUCTS

2.1 MATERIALS
2.1.1 Satisfactory Materials
2.1.2 Unsatisfactory Materials
2.1.3 Cohesionless and Cohesive Materials
2.1.4 Unyielding Material
2.1.5 Unstable Material
2.1.6 Select Granular Material
2.1.7 Initial Backfill Material
2.2 PLASTIC MARKING TAPE

PART 3 EXECUTION

3.1 EXCAVATION
3.1.1 Trench Excavation Requirements
3.1.1.1 Bottom Preparation
3.1.1.2 Removal of Unyielding Material
3.1.1.3 Removal of Unstable Material
3.1.1.4 Excavation for Appurtenances
3.1.2 Stockpiles
3.2 BACKFILLING AND COMPACTION
3.2.1 Trench Backfill
3.2.1.1 Replacement of Unyielding Material
3.2.1.2 Replacement of Unstable Material
3.2.1.3 Bedding and Initial Backfill
3.2.1.4 Final Backfill
3.2.2 Backfill for Appurtenances
3.3 SPECIAL REQUIREMENTS
3.3.1 Gas Distribution
3.3.2 Water Lines
3.3.3 Electrical Distribution System
3.3.4 Plastic Marking Tape
3.4 TESTING
3.4.1 Testing Facilities
3.4.2 Testing of Backfill Materials
3.4.3 Field Density Tests
3.4.4 Displacement of Sewers

-- End of Section Table of Contents --

SECTION 02316A

EXCAVATION, TRENCHING, AND BACKFILLING FOR UTILITIES SYSTEMS
11/97

PART 1 GENERAL

1.1 REFERENCES

The publications listed below form a part of this specification to the extent referenced. The publications are referred to in the text by basic designation only.

AMERICAN SOCIETY FOR TESTING AND MATERIALS (ASTM)

ASTM D 1556	(1990; R 1996) Density and Unit Weight of Soil in Place by the Sand-Cone Method
ASTM D 1557	(1998) Laboratory Compaction Characteristics of Soil Using Modified Effort (56,000 ft-lbf/cu. ft. (2,700 kN-m/cu. m.))
ASTM D 2167	(1994) Density and Unit Weight of Soil in Place by the Rubber Balloon Method
ASTM D 2487	(1998) Classification of Soils for Engineering Purposes (Unified Soil Classification System)
ASTM D 2922	(1996) Density of Soil and Soil-Aggregate in Place by Nuclear Methods (Shallow Depth)
ASTM D 3017	(1988; R1996el) Water Content of Soil and Rock in Place by Nuclear Methods (Shallow Depth)

1.2 GENERAL

This guide specification covers the requirements for excavation, trenching, and backfilling for utilities systems to the points of connection within 5 feet of buildings or other structures. See Section 02300a EARTHWORK for excavation, embankment, preparation of subgrades and grading for pavements. See Section 02315a EXCAVATION, FILLING AND BACKFILLING FOR BUILDINGS for excavation, filling and backfilling, dewatering, shoring, and grading for buildings and tank construction. Section 02315a covers areas within lines 5 feet outside of each building and structure line.

1.3 DEGREE OF COMPACTION

Degree of compaction shall be expressed as a percentage of the maximum density obtained by the test procedure presented in ASTM D 1557.

1.4 SUBMITTALS

Government approval is required for submittals with a "G" designation; submittals not having a "G" designation are for information only. When used, a designation following the "G" designation identifies the office that will review the submittal for the Government. The following shall be submitted in accordance with Section 01330 SUBMITTAL PROCEDURES:

SD-06 Test Reports

Field Density Tests;
Testing of Backfill Materials;

Copies of all laboratory and field test reports within 24 hours of the completion of the test.

PART 2 PRODUCTS

2.1 MATERIALS

2.1.1 Satisfactory Materials

Satisfactory materials shall comprise any materials classified by ASTM D 2487 as GW, GP, GM, GP-GM, GW-GM, GC, GP-GC, GM-GC, SW, SP, SM, SW-SM, SC, SW-SC, SP-SM, SP-SC, CL, ML, .

2.1.2 Unsatisfactory Materials

Materials which do not comply with the requirements for satisfactory materials are unsatisfactory. Unsatisfactory materials also include man-made fills, trash, refuse, or backfills from previous construction. Unsatisfactory material also includes material classified as satisfactory which contains root and other organic matter, frozen material, and stones larger than 3 inches. The Contracting Officer shall be notified of any contaminated materials.

2.1.3 Cohesionless and Cohesive Materials

Cohesionless materials shall include materials classified in ASTM D 2487 as GW, GP, SW, and SP. Cohesive materials shall include materials classified as GC, SC, ML, CL, MH, and CH. Materials classified as GM and SM shall be identified as cohesionless only when the fines are nonplastic.

2.1.4 Unyielding Material

Unyielding material shall consist of gravelly soils with stones greater than 3 inches in any dimension or as defined by the pipe manufacturer, whichever is smaller.

2.1.5 Unstable Material

Unstable material shall consist of materials too wet to properly support the utility pipe, conduit, or appurtenant structure.

2.1.6 Select Granular Material

Select granular material shall consist of well-graded sand, gravel, crushed gravel, crushed stone or crushed slag composed of hard, tough and durable particles, and shall contain not more than 10 percent by weight of material passing a No. 200 mesh sieve . The maximum allowable aggregate size shall be 1/2 inches, or the maximum size recommended by the pipe manufacturer, whichever is smaller.

2.1.7 Initial Backfill Material

Initial backfill shall consist of select granular material or satisfactory materials free from rocks 3 inches or larger in any dimension or free from rocks of such size as recommended by the pipe manufacturer, whichever is smaller. When the pipe is coated or wrapped for corrosion protection, the initial backfill material shall be free of stones larger than 1/2 inches in any dimension or as recommended by the pipe manufacturer, whichever is smaller.

2.2 PLASTIC MARKING TAPE

Plastic marking tape shall be acid and alkali-resistant polyethylene film, 6 inches wide with minimum thickness of 0.004 inch. Tape shall have a minimum strength of 1750 psi lengthwise and 1500 psi crosswise. The tape shall be manufactured with integral wires, foil backing or other means to enable detection by a metal detector when the tape is buried up to 3 feet deep. The tape shall be of a type specifically manufactured for marking and locating underground utilities. The metallic core of the tape shall be encased in a protective jacket or provided with other means to protect it from corrosion. Tape color shall be as specified in TABLE 1 and shall bear a continuous printed inscription describing the specific utility.

TABLE 1. Tape Color

Red:	Electric
Yellow:	Gas, Oil, Dangerous Materials
Orange:	Telephone, Telegraph, Television, Police, and Fire Communications
Blue:	Water Systems
Green:	Sewer Systems

PART 3 EXECUTION

3.1 EXCAVATION

Excavation shall be performed to the lines and grades indicated. During excavation, material satisfactory for backfilling shall be stockpiled in an orderly manner at a distance from the banks of the trench equal to 1/2 the depth of the excavation, but in no instance closer than 2 feet. Excavated material not required or not satisfactory for backfill shall be removed from the siteand disposed of in accordance with Section 01450 CHEMICAL DATA QUALITY CONTROL . Grading shall be done as may be necessary to prevent surface water from flowing into the excavation, and any water accumulating shall be removed to maintain the stability of the bottom and sides of the excavation. Unauthorized overexcavation shall be backfilled in accordance with paragraph BACKFILLING AND COMPACTION at no additional cost to the Government.

3.1.1 Trench Excavation Requirements

The trench shall be excavated as recommended by the manufacturer of the pipe to be installed. Trench walls below the top of the pipe shall be sloped, or made vertical, and of such width as recommended in the manufacturer's installation manual. Where no manufacturer's installation manual is available, trench walls shall be made vertical. Trench walls shall be shored, cut back to a stable slope, or provided with equivalent means of protection in accordance with 29 CFR 1926 Subpart P and all other applicable Federal, State and Corps of Engineers guidance for employees who may be exposed to moving ground or cave in. Special attention shall be given to slopes which may be adversely affected by weather or moisture content. The trench width below the top of pipe shall not exceed 24 inches plus pipe outside diameter (O.D.) for pipes of less than 24 inches inside diameter and shall not exceed 36 inches plus pipe outside diameter for sizes larger than 24 inches inside diameter. Where recommended trench widths are exceeded, redesign, stronger pipe, or special installation procedures shall be utilized by the Contractor. The cost of redesign, stronger pipe, or special installation procedures shall be borne by the Contractor without any additional cost to the Government.

3.1.1.1 Bottom Preparation

The bottoms of trenches shall be accurately graded to provide uniform bearing and support for the bottom quadrant of each section of the pipe. Bell holes shall be excavated to the necessary size at each joint or coupling to eliminate point bearing. Stones of 3_ inches or greater in any dimension, or as

recommended by the pipe manufacturer, whichever is smaller, shall be removed to avoid point bearing.

3.1.1.2 Removal of Unyielding Material

Where overdepth is not indicated and unyielding material is encountered in the bottom of the trench, such material shall be removed 4 inches below the required grade and replaced with suitable materials as provided in paragraph BACKFILLING AND COMPACTION.

3.1.1.3 Removal of Unstable Material

Where unstable material is encountered in the bottom of the trench, such material shall be removed to the depth directed and replaced to the proper grade with select granular material as provided in paragraph BACKFILLING AND COMPACTION. When removal of unstable material is required due to the Contractor's fault or neglect in performing the work, the resulting material shall be excavated and replaced by the Contractor without additional cost to the Government.

3.1.1.4 Excavation for Appurtenances

Excavation for manholes, catch-basins, inlets, or similar structures shall be of sufficient size to permit the placement and removal of forms for the full length and width of structure footings and foundations as shown. Loose disintegrated rock and thin strata shall be removed. Removal of unstable material shall be as specified above. When concrete or masonry is to be placed in an excavated area, special care shall be taken not to disturb the bottom of the excavation. Excavation to the final grade level shall not be made until just before the concrete or masonry is to be placed.

3.1.2 Stockpiles

Stockpiles of satisfactory, unsatisfactory and wasted materials shall be placed and graded as specified. Contaminated soil stockpiles shall be as shown on sheet C9-6 and in accordance with Section 01450 CHEMICAL DATA QUALITY CONTROL. Stockpiles shall be kept in a neat and well drained condition, giving due consideration to drainage at all times. The ground surface at stockpile locations shall be cleared, grubbed, and sealed by rubber-tired equipment, excavated satisfactory and unsatisfactory materials shall be separately stockpiled. Stockpiles of satisfactory materials shall be protected from contamination which may destroy the quality and fitness of the stockpiled material. If the Contractor fails to protect the stockpiles, and any material becomes unsatisfactory, such material shall be removed and replaced with satisfactory material from approved sources at no additional cost to the Government. Locations of stockpiles of satisfactory materials shall be subject to prior approval of the Contracting Officer.

3.2 BACKFILLING AND COMPACTION

Backfill material shall consist of satisfactory material, select granular material, or initial backfill material as required. Backfill shall be placed in layers not exceeding 6 inches loose thickness for compaction by hand operated machine compactors, and 8 inches loose thickness for other than hand operated machines, unless otherwise specified. Each layer shall be compacted to at least 95 percent maximum density for cohesionless soils and 90 percent maximum density for cohesive soils, unless otherwise specified.

3.2.1 Trench Backfill

Trenches shall be backfilled to the grade shown. The trench shall be backfilled to 2 feet above the top of pipe prior to performing the required pressure tests. The joints and couplings shall be left uncovered during the pressure

test. The trench shall not be backfilled until all specified tests are performed.

3.2.1.1 Replacement of Unyielding Material

Unyielding material removed from the bottom of the trench shall be replaced with select granular material or initial backfill material.

3.2.1.2 Replacement of Unstable Material

Unstable material removed from the bottom of the trench or excavation shall be replaced with select granular material placed in layers not exceeding 6 inches loose thickness.

3.2.1.3 Bedding and Initial Backfill

Bedding shall be of the type and thickness shown. Initial backfill material shall be placed and compacted with approved tampers to a height of at least one foot above the utility pipe or conduit. The backfill shall be brought up evenly on both sides of the pipe for the full length of the pipe. Care shall be taken to ensure thorough compaction of the fill under the haunches of the pipe.

3.2.1.4 Final Backfill

The remainder of the trench, except for special materials for roadways shall be filled with satisfactory material. Backfill material shall be placed and compacted as follows:

a. Roadways: Backfill shall be placed up to the elevation at which the requirements in Section 02300a EARTHWORK control. Water flooding or jetting methods of compaction will not be permitted.

b. Sidewalks, Turfed or Seeded Areas and Miscellaneous Areas: Backfill shall be deposited in layers of a maximum of 12 inch loose thickness, and compacted to 85 percent maximum density for cohesive soils and 90 percent maximum density for cohesionless soils. Compaction by water flooding or jetting will not be permitted. This requirement shall also apply to all other areas not specifically designated above.

3.2.2 Backfill for Appurtenances

After the manhole, catchbasin, inlet, or similar structure has been constructed and the concrete has been allowed to cure for 7 days, backfill shall be placed in such a manner that the structure will not be damaged by the shock of falling earth. The backfill material shall be deposited and compacted as specified for final backfill, and shall be brought up evenly on all sides of the structure to prevent eccentric loading and excessive stress.

3.3 SPECIAL REQUIREMENTS

Special requirements for both excavation and backfill relating to the specific utilities are as follows:

3.3.1 Gas Distribution

Trenches shall be excavated to a depth that will provide not less than 24 inches of cover in other excavation. Trenches shall be graded as specified for pipe-laying requirements in Section 02556a GAS DISTRIBUTION SYSTEM.

3.3.2 Water Lines

Trenches shall be of a depth to provide a minimum cover of 3 feet from the existing ground surface, or from the indicated finished grade, whichever is lower, to the top of the pipe.

3.3.3 Electrical Distribution System

Direct burial cable and conduit or duct line shall have a minimum cover of 24 inches from the finished grade, unless otherwise indicated. Special trenching requirements for direct-burial electrical cables and conduits are specified in Section 16375A ELECTRICAL DISTRIBUTION SYSTEM, UNDERGROUND.

3.3.4 Plastic Marking Tape

Warning tapes shall be installed directly above the pipe, at a depth of 18 inches below finished grade unless otherwise shown.

3.4 TESTING

Testing shall be the responsibility of the Contractor and shall be performed at no additional cost to the Government.

3.4.1 Testing Facilities

Tests shall be performed by an approved commercial testing laboratory or may be tested by facilities furnished by the Contractor. No work requiring testing will be permitted until the facilities have been inspected and approved by the Contracting Officer.

3.4.2 Testing of Backfill Materials

Classification of backfill materials shall be determined in accordance with ASTM D 2487 and the moisture-density relations of soils shall be determined in accordance with ASTM D 1557. A minimum of one soil classification and one moisture-density relation test shall be performed on each different type of material used for bedding and backfill.

3.4.3 Field Density Tests

Tests shall be performed in sufficient numbers to ensure that the specified density is being obtained. A minimum of one field density test per lift of backfill for every 200 feet of installation shall be performed. One moisture density relationship shall be determined for every 1500 cubic yards of material used. Field in-place density shall be determined in accordance with ASTM D 1556, ASTM D 2167,ASTM D 2922. When ASTM D 2922 is used, the calibration curves shall be checked and adjusted using the sand cone method as described in paragraph Calibration of the ASTM publication. ASTM D 2922 results in a wet unit weight of soil and when using this method, ASTM D 3017 shall be used to determine the moisture content of the soil. The calibration curves furnished with the moisture gauges shall be checked along with density calibration checks as described in ASTM D 3017. The calibration checks of both the density and moisture gauges shall be made at the beginning of a job, on each different type of material encountered, at intervals as directed by the Contracting Officer. Copies of calibration curves, results of calibration tests, and field and laboratory density tests shall be furnished to the Contracting Officer. Trenches improperly compacted shall be reopened to the depth directed, then refilled and compacted to the density specified at no additional cost to the Government.

3.4.4 Displacement of Sewers

After other required tests have been performed and the trench backfill compacted to 2 feet above the top of the pipe, the pipe shall be inspected to determine whether significant displacement has occurred. This inspection shall be conducted in the presence of the Contracting Officer. Pipe sizes larger than 36 inches shall be entered and examined, while smaller diameter pipe shall be inspected by shining a light or laser between manholes or manhole locations, or

by the use of television cameras passed through the pipe. If, in the judgement of the Contracting Officer, the interior of the pipe shows poor alignment or any other defects that would cause improper functioning of the system, the defects shall be remedied as directed at no additional cost to the Government.

-- End of Section --

SECTION TABLE OF CONTENTS

DIVISION 02 - SITE WORK

SECTION 02374A

GEOSYNTHETIC DRAINAGE LAYER

12/99

PART 1 GENERAL

1.1 REFERENCES
1.2 SUBMITTALS
1.3 CONSTRUCTION QUALITY CONTROL LABORATORY QUALIFICATIONS
1.4 DELIVERY, STORAGE AND HANDLING

PART 2 PRODUCTS

2.1 GEOSYNTHETIC DRAINAGE LAYER
2.2 SAMPLING AND TESTING
2.2.1 Manufacturing Quality Control Testing
2.2.2 Construction Quality Control Testing

PART 3 EXECUTION

3.1 INSTALLATION
3.1.1 Surface Preparation
3.1.2 Placement
3.1.3 Seams and Overlaps
3.1.3.1 Core Seams
3.1.4 Penetrations
3.2 REPAIRS
3.2.1 Core Damage
3.3 PROTECTION AND BACKFILLING

-- End of Section Table of Contents --

SECTION 02374A

GEOSYNTHETIC DRAINAGE LAYER
12/99

PART 1 GENERAL

1.1 REFERENCES

The publications listed below form a part of the specification to the extent referenced. The publications are referred to in the text by basic designation only.

AMERICAN SOCIETY FOR TESTING AND MATERIALS (ASTM)

ASTM D 1505	(1998) Density of Plastics by the Density-Gradient Technique
ASTM D 4716	(1995) Determining the (In-Plane) Flow Rate Per Unit Width and Hydraulic Transmissivity of a Geosynthetic using a Constant Head
ASTM D 5199	(1998) Nominal Thickness of Geotextiles and Geomembranes

1.2 SUBMITTALS

Government approval is required for submittals with a "G" designation; submittals not having a "G" designation are for information only. When used, a designation following the "G" designation identifies the office that will review the submittal for the Government. The following shall be submitted in accordance with Section 01330 SUBMITTAL PROCEDURES:

SD-03 Product Data

Sampling and Testing; G-RE

Manufacturer's quality control manual.

Seams and Overlaps; G-RE

Seam details.

Penetrations; G-RE

Penetration details.

Construction Quality Control Laboratory Qualifications; G-RE

Qualifications of Construction Quality Control laboratory.

SD-04 Samples

Geosynthetic Drainage Layer; G-RE

One properly identified 24 by 24 inch minimum size geosynthetic drainage layer sample. The fasteners proposed for use shall also be submitted.

SD-06 Test Reports

Sampling and Testing; G-RE

Construction quality control test results.

Geosynthetic Drainage Layer; G-RE

Manufacturer's quality control test results. Test results not meeting the requirements in Table 1 will result in rejection of applicable rolls.

1.3 CONSTRUCTION QUALITY CONTROL LABORATORY QUALIFICATIONS

The construction quality control (QC) laboratory shall have provided QC and/or quality assurance (QA) testing of geosynthetic drainage layers for at least five completed projects having a total minimum area of 2 million square feet. The QC laboratory shall carry current accreditation via the Geosynthetic Accreditation Institute's Laboratory Accreditation Program (GAI-LAP) for the tests the QC laboratory will be required to perform.

1.4 DELIVERY, STORAGE AND HANDLING

Geosynthetic drainage layer material shall not be damaged during shipping, storage, or handling. Any drainage layer material found to be damaged shall be repaired or replaced. Material shall be delivered only after the required submittals have been approved. Each roll shall be labeled with the Manufacturer's name, product identification, lot number, roll number, and roll dimensions.

PART 2 PRODUCTS

2.1 GEOSYNTHETIC DRAINAGE LAYER

The geosynthetic drainage layer shall consist of a single cuspated core. The polymer used to manufacture the core component of the geosynthetic drainage layer shall be PVC which is clean and free of any foreign contaminants. Regrind material which consists of edge trimmings and other scraps may be used to manufacture the core; however, post-consumer recycled materials shall not be used. The geosynthetic drainage layer shall conform to the property requirements listed in Table 1 and shall be free of defects.

TABLE 1 - GEOSYNTHETIC DRAINAGE LAYER PROPERTIES

PROPERTY	TEST METHOD	TEST VALUE	MINIMUM TESTING FREQUENCY
CORE			
Thickness, minimum average	ASTM D 5199	0.43 in.	15,000 lbs
Polymer Density, minimum	ASTM D 1505	1.35 g/cc	200,000 lbs
Transmissivity, minimum, Note 1	ASTM D 4716	14.5 gal/ min-foot	100,000 sq yds
Compressive Strength	ASTM D 1621	15,000 psf	100,000 sq yds

Note 1: Manufacturing quality control transmissivity tests shall be measured using water at 68 degrees F with a gradient of 1.0 under a normal pressure of 29 psi. A minimum seating period of 100 minutes shall be used.

TABLE 1 - GEOSYNTHETIC DRAINAGE LAYER PROPERTIES

PROPERTY	TEST METHOD	TEST VALUE	MINIMUM TESTING FREQUENCY

2.2 SAMPLING AND TESTING

2.2.1 Manufacturing Quality Control Testing

Manufacturing quality control test methods and frequencies shall be in accordance with Table 1 unless otherwise approved.

2.2.2 Construction Quality Control Testing

A minimum of one construction quality control transmissivity test shall be performed in accordance with the requirements of this paragraph. Transmissivity shall be measured using water at 68 degrees F with a gradient of 1 under a normal pressure of 29 psi. The drainage layer shall be sandwiched between steel plate on the bottom and steel plate on the top. A minimum seating period of 100 minutes shall be used. The construction quality control test results must achieve a minimum transmissivity of 14.5 gallon/minute/foot.

PART 3 EXECUTION

3.1 INSTALLATION

3.1.1 Surface Preparation

Prior to placement of the geosynthetic drainage layer, the steel tank shall be cleaned of all materials which could damage the drainage layer.

3.1.2 Placement

The geosynthetic drainage layer shall not be damaged during placement. Faulty or damaged material shall be replaced or repaired as specified in paragraph REPAIRS. The drainage layer shall be unrolled in the direction of maximum slope, keeping the cusps flat against the steel tank to minimize wrinkles and folds.

3.1.3 Seams and Overlaps

3.1.3.1 Core Seams

Core seams shall be sealed per manufacturer recommendations in order to prevent concrete from entering the voids of the drainage layer. The method of seaming shall be approved by the Contracting Officer.

3.1.4 Penetrations

Penetrations shall be made as recommended by the manufacturer.

3.2 REPAIRS

3.2.1 Core Damage

Repairs shall be made as recommemded by the manufacturer. If more than 25 percent of the roll width is damaged, approval must be obtained to repair or replace the damaged roll.

3.3 PROTECTION AND BACKFILLING

The geosynthetic drainage layer shall be covered with the specified materials within 45 days of acceptance. Concrete requirements are described in Section 03300 CAST-IN-PLACE STRUCTURAL CONCRETE.

-- End of Section --

SECTION TABLE OF CONTENTS

DIVISION 02 - SITE WORK

SECTION 02510A

WATER DISTRIBUTION SYSTEM

04/98

PART 1 GENERAL

1.1 REFERENCES
1.2 PIPING
1.2.1 Service Lines
1.2.2 Distribution Lines 3 Inches or Larger
1.2.3 Sprinkler Supply Lines
1.2.4 Potable Water Lines
1.2.5 Plastic Piping System
1.2.6 Excavation, Trenching, and Backfilling
1.3 MANUFACTURER'S REPRESENTATIVE
1.4 SUBMITTALS
1.5 HANDLING
1.5.1 Polyethylene (PE) Pipe Fittings and Accessories
1.5.2 Miscellaneous Plastic Pipe and Fittings

PART 2 PRODUCTS

2.1 PIPE
2.1.1 Plastic Pipe
2.1.1.1 PE Plastic Pipe
2.1.1.2 PVC Plastic Pipe
2.1.1.3 Oriented Polyvinyl Chloride (PVCO) Plastic Pipe
2.1.2 Reinforced Plastic Mortar Pressure (RPMP) Pipe
2.1.3 Reinforced Thermosetting Resin Pipe (RTRP)
2.1.3.1 RTRP-I
2.1.3.2 RTRP-II
2.2 FITTINGS AND SPECIALS
2.2.1 PVC Pipe System
2.2.2 RTRP and RPMP Pipe
2.3 JOINTS
2.3.1 Plastic Pipe Jointing
2.3.1.1 PE Pipe
2.3.1.2 PVC Pipe
2.3.1.3 PVCO Pipe
2.3.2 RPMP Pipe
2.3.3 RTRP Pipe
2.3.3.1 RTRP-I, Grade 1 and 2
2.3.3.2 RTRP-II, Grade 1 and 2
2.4 VALVES
2.4.1 Check Valves
2.4.2 Gate Valves
2.4.3 Vacuum and Air Relief Valves
2.4.4 Indicator Post for Valves
2.5 VALVE BOXES
2.6 VALVE PITS
2.7 FIRE HYDRANTS
2.8 MISCELLANEOUS ITEMS
2.8.1 Service Clamps
2.8.2 Corporation Stops

2.8.3 Goosenecks
2.8.4 Service Stops
2.8.5 Tapping Sleeves
2.8.6 Service Boxes
2.8.7 Disinfection

PART 3 EXECUTION

3.1 INSTALLATION
3.1.1 Cutting of Pipe
3.1.2 Adjacent Facilities
3.1.2.1 Sewer Lines
3.1.2.2 Water Lines
3.1.2.3 Copper Tubing Lines
3.1.2.4 Nonferrous Metallic Pipe
3.1.3 Joint Deflection
3.1.3.1 Offset for Flexible Plastic Pipe
3.1.3.2 Allowable for RPMP Pipe
3.1.4 Placing and Laying
3.1.4.1 Plastic Pipe Installation
3.1.4.2 Piping Connections
3.1.4.3 Flanged Pipe
3.1.5 Jointing
3.1.5.1 PE Pipe Requirements
3.1.5.2 PVC Plastic Pipe Requirements
3.1.5.3 RTRP I, RTRP II and RPMP Pipe
3.1.6 Installation of Service Lines
3.1.6.1 Service Lines 50 mm (2 Inches) and Smaller
3.1.6.2 Service Lines Larger than 2 Inches
3.1.6.3 Service Lines for Sprinkler Supplies
3.1.7 Setting of Fire Hydrants, Valves and Valve Boxes
3.1.7.1 Location of Fire Hydrants
3.1.7.2 Location of Valves
3.1.7.3 Location of Service Boxes
3.1.8 Thrust Restraint
3.1.8.1 Thrust Blocks
3.2 HYDROSTATIC TESTS
3.2.1 Pressure Test
3.2.2 Leakage Test
3.2.3 Time for Making Test
3.2.4 Concurrent Hydrostatic Tests
3.3 BACTERIOLOGICAL DISINFECTION
3.3.1 Bacteriological Disinfection
3.4 CLEANUP

-- End of Section Table of Contents --

SECTION 02510A

WATER DISTRIBUTION SYSTEM
04/98

PART 1 GENERAL

1.1 REFERENCES

The publications listed below form a part of this specification to the extent referenced. The publications are referred to in the text by basic designation only.

AMERICAN SOCIETY FOR TESTING AND MATERIALS (ASTM)

ASTM B 88	(1999) Seamless Copper Water Tube
ASTM D 1599	(1999) Resistance to Short-Time Hydraulic Failure Pressure of Plastic Pipe, Tubing, and Fittings
ASTM D 1784	(1999a) Rigid Poly(Vinyl Chloride) (PVC) Compounds and Chlorinated Poly(Vinyl Chloride) (CPVC) Compounds
ASTM D 1785	(1999) Poly(Vinyl Chloride) (PVC) Plastic Pipe, Schedules 40, 80, and 120
ASTM D 2241	(2000) Poly(Vinyl Chloride) (PVC) Pressure-Rated Pipe (SDR Series)
ASTM D 2464	(1999) Threaded Poly(Vinyl Chloride) (PVC) Plastic Pipe Fittings, Schedule 80
ASTM D 2466	(2001) Poly(Vinyl Chloride) (PVC) Plastic Pipe Fittings, Schedule 40
ASTM D 2467	(2001) Poly(Vinyl Chloride) (PVC) Plastic Pipe Fittings, Schedule 80
ASTM D 2564	(1996a) Solvent Cements for Poly(Vinyl Chloride) (PVC) Plastic Piping Systems
ASTM D 2657	(1997) Heat Fusion Joining Polyolefin Pipe and Fittings
ASTM D 2774	(2001) Underground Installation of Thermoplastic Pressure Piping
ASTM D 2855	(1996) Making Solvent-Cemented Joints with Poly(Vinyl Chloride) (PVC) Pipe and Fittings
ASTM D 2996	(2001) Filament-Wound "Fiberglass" (Glass-Fiber-Reinforced Thermosetting-Resin) Pipe
ASTM D 2997	(2001) Centrifugally Cast "Fiberglass" (Glass-Fiber-Reinforced Thermosetting-Resin) Pipe

ASTM D 3139	(1998) Joints for Plastic Pressure Pipes Using Flexible Elastomeric Seals
ASTM D 3839	(1994a) Underground Installation of "Fiberglass" (Glass-Fiber-Reinforced Thermosetting Resin) Pipe
ASTM D 4161	(2001) "Fiberglass"(Glass-Fiber-Reinforced Thermosetting Resin) Pipe Joints Using Elastomeric Seals
ASTM F 477	(1999) Elastomeric Seals (Gaskets) for Joining Plastic Pipe
ASTM F 1483	(1998) Oriented Poly(Vinyl Chloride), PVCO, Pressure Pipe

ASME INTERNATIONAL (ASME)

ASME B1.20.1	(1983; R 1992) Pipe Threads, General Purpose (Inch)
ASME B16.1	(1998) Cast Iron Pipe Flanges and Flanged Fittings

AMERICAN WATER WORKS ASSOCIATION (AWWA)

AWWA B300	(1999) Hypochlorites
AWWA B301	(1999) Liquid Chlorine
AWWA C104	(1995) Cement-Mortar Lining for Ductile-Iron Pipe and Fittings for Water
AWWA C110	(1998) Ductile-Iron and Gray-Iron Fittings, 3 In. Through 48 In. (75 mm through 1200 mm), for Water and Other Liquids
AWWA C111	(2000) Rubber-Gasket Joints for Ductile-Iron Pressure Pipe and Fittings
AWWA C153	(2000) Ductile-Iron Compact Fittings, 3 In. Through 24 In. (76 mm through 610 mm) and 54 In. through 64 In. (1,400 mm through 1,600 mm) for Water Service
AWWA C500	(1993; C500a) Metal-Sealed Gate Valves for Water Supply Service
AWWA C502	(1994; C502a) Dry-Barrel Fire Hydrants
AWWA C509	(2001) Resilient-Seated Gate Valves for Water Supply Service
AWWA C800	(2001) Underground Service Line Valves and Fittings
AWWA C900	(1997; C900a) Polyvinyl Chloride (PVC) Pressure Pipe, 4 In. Through 12 In., for Water Distribution
AWWA C901	(1996) Polyethylene (PE) Pressure Pipe and

	Tubing, 1/2 In. Through 3 In., for Water Service
AWWA C909	(1998) Molecularly Oriented Polyvinyl Chloride (PVCO) Pressure Pipe, 4 IN through 12 IN (100 mm through 300 mm), for Water Distribution
AWWA C950	(1995) Fiberglass Pressure Pipe
AWWA M23	(1980) Manual: PVC Pipe - Design and Installation

ASBESTOS CEMENT PIPE PRODUCERS ASSOCIATION (ACPPA)

ACPPA Work Practices	(1988) Recommended Work Practices for A/C Pipe

MANUFACTURERS STANDARDIZATION SOCIETY OF THE VALVE AND FITTINGS INDUSTRY (MSS)

MSS SP-80	(1997) Bronze Gate, Globe, Angle and Check Valves

NATIONAL FIRE PROTECTION ASSOCIATION (NFPA)

NFPA 24	(1995) Installation of Private Fire Service Mains and Their Appurtenances
NFPA 704	(2001) Identification of the Hazards of Materials for Emergency Response

NSF INTERNATIONAL (NSF)

NSF 14	(2002) Plastics Piping Components and Related Materials
NSF 61	(2001) Drinking Water System Components - Health Effects (Sections 1-9)

THE SOCIETY FOR PROTECTIVE COATINGS (SSPC)

SSPC Paint 21	(1991) White or Colored Silicone Alkyd Paint
SSPC Paint 25	(1991) Red Iron Oxide, Zinc Oxide, Raw Linseed Oil and Alkyd Primer (Without Lead and Chromate Pigments)

1.2 PIPING

This section covers water distribution and service lines, and connections to building service at a point approximately 5 feet outside buildings and structures to which service is required. The Contractor shall have a copy of the manufacturer's recommendations for each material or procedure to be utilized available at the construction site at all times.

1.2.1 Service Lines

Piping for water service lines less than 3 inchesin diameter shall be polyvinyl chloride (PVC) plastic, Oriented PVC plastic polyethylene, unless otherwise shown or specified. Piping for water service lines 3 inchesand larger shall be polyvinyl chloride (PVC) plastic, filament-wound or centrifugally cast reinforced thermosetting resin or reinforced plastic mortar pressure pipe , unless otherwise shown or specified.

1.2.2 Distribution Lines 3 Inches or Larger

Piping for water distribution lines 3 inches or larger shall be polyvinyl

chloride (PVC) through 36 inch nominal diameter plastic, Oriented PVC plastic filament-wound or centrifugally cast reinforced thermosetting resin, unless otherwise shown or specified.

1.2.3 Sprinkler Supply Lines

Piping for water lines supplying sprinkler systems for building fire protection shall conform to NFPA 24 from the point of connection with the water distribution system to the building 5 foot line.

1.2.4 Potable Water Lines

Piping and components of potable water systems which come in contact with the potable water shall conform to NSF 61.

1.2.5 Plastic Piping System

Plastic piping system components (PVC, polyethylene, thermosetting resin and reinforced plastic mortar pressure) intended for transportation of potable water shall comply with NSF 14 and be legibly marked with their symbol.

1.2.6 Excavation, Trenching, and Backfilling

Excavation, trenching, and backfilling shall be in accordance with the applicable provisions of Section 02316a EXCAVATION, TRENCHING, AND BACKFILLING FOR UTILITIES SYSTEMS, except as modified herein.

1.3 MANUFACTURER'S REPRESENTATIVE

The Contractor shall have a manufacturer's field representative present at the jobsite during the installation and testing of PE, RTRP, and/or RPMP pipe to provide technical assistance and to verify that the materials are being installed in accordance with the manufacturer's prescribed procedures. When the representative feels that the Contractor is installing and testing the PE, RTRP, and/or RPMP pipe in a satisfactory manner, certification shall be written to note which individuals employed by the Contractor are capable of properly installing the pipe. The field representative shall advise the Contractor of unsatisfactory conditions immediately when they occur. Such conditions include improper diameter of pipe ends, damaged interior liner, poorly prepared joints, improper curing of joints, moving pipe before joints are cured, bending pipe to follow abrupt changes in trench contours, leaving pipe ends open in trench overnight, not properly drying joints after rain storms, exceeding effective adhesive life, sharp objects in trench bed, backfill that could damage pipe, improper procedure for concrete encasement of pipe, omission of thrust blocks at changes in direction or any other condition which could have an adverse effect on the satisfactory completion and operation of the piping system.

1.4 SUBMITTALS

Government approval is required for submittals with a "G" designation; submittals not having a "G" designation are for information only. When used, a designation following the "G" designation identifies the office that will review the submittal for the Government. The following shall be submitted in accordance with Section 01330 SUBMITTAL PROCEDURES:

SD-03 Product Data

Installation; .

The manufacturer's recommendations for each material or procedure to be utilized.

Waste Water Disposal Method; .

The method proposed for disposal of waste water from hydrostatic tests and disinfection, prior to performing hydrostatic tests.

Satisfactory Installation; .

A statement signed by the principal officer of the contracting firm stating that the installation is satisfactory and in accordance with the contract drawings and specifications, and the manufacturer's prescribed procedures and techniques, upon completion of the project and before final acceptance.

SD-06 Test Reports

Bacteriological Disinfection; .

Test results from commercial laboratory verifying disinfection.

SD-07 Certificates

Manufacturer's Representative; .

The name and qualifications of the manufacturer's representative and written certification from the manufacturer that the representative is technically qualified in all phases of PE, RTRP, and/or RPMP pipe laying and jointing and experienced to supervise the work and train the Contractor's field installers, prior to commencing installation.

Installation; .

A statement signed by the manufacturer's field representative certifying that the Contractor's personnel are capable of properly installing the pipe on the project.

1.5 HANDLING

Pipe and accessories shall be handled to ensure delivery to the trench in sound, undamaged condition, including no injury to the pipe coating or lining. If the coating or lining of any pipe or fitting is damaged, the repair shall be made by the Contractor in a satisfactory manner, at no additional cost to the Government. No other pipe or material shall be placed inside a pipe or fitting after the coating has been applied. Pipe shall be carried into position and not dragged. Use of pinch bars and tongs for aligning or turning pipe will be permitted only on the bare ends of the pipe. The interior of pipe and accessories shall be thoroughly cleaned of foreign matter before being lowered into the trench and shall be kept clean during laying operations by plugging or other approved method. Before installation, the pipe shall be inspected for defects. Material found to be defective before or after laying shall be replaced with sound material without additional expense to the Government. Rubber gaskets that are not to be installed immediately shall be stored in a cool and dark place.

1.5.1 Polyethylene (PE) Pipe Fittings and Accessories

PE pipe, fittings, and accessories shall be handled in conformance with AWWA C901.

1.5.2 Miscellaneous Plastic Pipe and Fittings

Polyvinyl Chloride (PVC), Reinforced Thermosetting Resin Pipe (RTRP), and Reinforced Plastic Mortar Pressure (RPMP) pipe and fittings shall be handled and stored in accordance with the manufacturer's recommendations. Storage

facilities shall be classified and marked in accordance with NFPA 704.

PART 2 PRODUCTS

2.1 PIPE

Pipe shall conform to the respective specifications and other requirements specified below.

2.1.1 Plastic Pipe

2.1.1.1 PE Plastic Pipe

Pipe, tubing, and heat-fusion fittings shall conform to AWWA C901.

2.1.1.2 PVC Plastic Pipe

Pipe, couplings and fittings shall be manufactured of material conforming to ASTM D 1784, Class 12454B.

a. Pipe Less Than 4 inch Diameter:

(1) Screw-Joint: Pipe shall conform to dimensional requirements of ASTM D 1785 Schedule 80, with joints meeting requirements of 150 psi working pressure, 200 psi hydrostatic test pressure, unless otherwise shown or specified. Pipe couplings when used, shall be tested as required by ASTM D 2464.

(2) Elastomeric-Gasket Joint: Pipe shall conform to dimensional requirements of ASTM D 1785 Schedule 40, with joints meeting the requirements of 150 psi working pressure, 200 psi hydrostatic test pressure, unless otherwise shown or specified, or it may be pipe conforming to requirements of ASTM D 2241, elastomeric joint, with the following applications:

SDR	Maximum Working Pressure psi	Minimum Hydrostatic Pressure psi
17	150	200

(3) Solvent Cement Joint: Pipe shall conform to dimensional requirements of ASTM D 1785 or ASTM D 2241 with joints meeting the requirements of 150 psi working pressure and 200 psi hydrostatic test pressure.

b. Pipe 4 through 12 inch Diameter: Pipe, couplings and fittings shall conform to AWWA C900, Class 150, CIOD pipe dimensions, elastomeric-gasket joint, unless otherwise shown or specified.

2.1.1.3 Oriented Polyvinyl Chloride (PVCO) Plastic Pipe

Pipe, couplings, and fittings shall be manufactured of material conforming to ASTM D 1784, Class 12454-B. Pipe shall conform to AWWA C909, Class 150, and to ASTM F 1483 and shall have an outside diameter equal to cast iron outside diameter.

2.1.2 Reinforced Plastic Mortar Pressure (RPMP) Pipe

RPMP shall be produced by centrifugal casting and shall have an OD 12 to 48 inches equal to ductile-iron, with a 150 psi pressure rating and with a minimum pipe stiffness of 36 psi. RPMP shall be in accordance with AWWA C950.

2.1.3 Reinforced Thermosetting Resin Pipe (RTRP)

Pipe shall have a quick-burst strength greater than or equal to four times the normal working pressure of the pipe. The quick-burst strength test shall conform to the requirements of ASTM D 1599.

2.1.3.1 RTRP-I

RTRP-I shall conform to ASTM D 2996, except pipe shall have an outside diameter equal to cast iron outside diameter or standard weight steel pipe. The pipe shall be suitable for a normal working pressure of 150 psi at 73 degrees F. The inner surface of the pipe shall have a smooth uniform continuous resin-rich surface liner conforming to ASTM D 2996.

2.1.3.2 RTRP-II

RTRP-II shall conform to ASTM D 2997. Pipe shall have an outside diameter equal to standard weight steel pipe.

2.2 FITTINGS AND SPECIALS

2.2.1 PVC Pipe System

a. For pipe less than 4 inch diameter, fittings for threaded pipe shall conform to requirements of ASTM D 2464, threaded to conform to the requirements of ASME B1.20.1 for use with Schedule 80 pipe and fittings; fittings for solvent cement jointing shall conform to ASTM D 2466 or ASTM D 2467; and fittings for elastomeric-gasket joint pipe shall be iron conforming to AWWA C110 or AWWA C111. Iron fittings and specials shall be cement-mortar lined (standard thickness) in accordance with AWWA C104.

b. For pipe 4 inch diameter and larger, fittings and specials shall be iron, bell end in accordance with AWWA C110, 150 psi pressure rating unless otherwise shown or specified, except that profile of bell may have special dimensions as required by the pipe manufacturer; or fittings and specials may be of the same material as the pipe with elastomeric gaskets, all in conformance with AWWA C900. Iron fittings and specials shall be cement-mortar lined (standard thickness) in accordance with AWWA C104. Fittings shall be bell and spigot or plain end pipe, or as applicable. Ductile iron compact fittings shall be in accordance with AWWA C153.

2.2.2 RTRP and RPMP Pipe

Fittings and specials shall be compatible with the pipe supplied. Filament wound or molded fittings up to 6 inches shall conform to AWWA C950. Iron fittings shall be cement-mortar lined in accordance with AWWA C104 and shall conform to AWWA C110 and AWWA C111. Fittings shall be suitable for working and testing pressures specified for the pipe.

2.3 JOINTS

2.3.1 Plastic Pipe Jointing

2.3.1.1 PE Pipe

Joints for pipe fittings and couplings shall be strong tight joints as specified

for PE in Paragraph INSTALLATION. Joints connecting pipe of differing materials shall be made in accordance with the manufacturer's recommendation, and as approved by the Contracting Officer.

2.3.1.2 PVC Pipe

Joints, fittings, and couplings shall be as specified for PVC pipe. Joints connecting pipe of differing materials shall be made in accordance with the manufacturer's recommendations, and as approved by the Contracting Officer.

2.3.1.3 PVCO Pipe

Joints shall conform to ASTM D 3139. Elastomeric gaskets shall conform to ASTM F 477.

2.3.2 RPMP Pipe

Joints shall be bell and spigot gasket coupling utilizing an elastomeric gasket in accordance with ASTM D 4161.

2.3.3 RTRP Pipe

2.3.3.1 RTRP-I, Grade 1 and 2

Joints shall be bell and spigot with elastomeric gasket, mechanical coupling with elastomeric gasket, threaded and bonded coupling, or tapered bell and spigot with compatible adhesive. All RTRP-I materials shall be products of a single manufacturer.

2.3.3.2 RTRP-II, Grade 1 and 2

Joints shall be the bell and spigot type with elastomeric gasket, bell and spigot with adhesive, butt-jointed with adhesive bonded reinforced overlay, mechanical, flanged, threaded or commercially available proprietary joints, provided they are capable of conveying water at the pressure and temperature of the pipe.

2.4 VALVES

2.4.1 Check Valves

Check valves shall be designed for a minimum working pressure of 150 psi or as indicated. Valves shall have a clear waterway equal to the full nominal diameter of the valve. Valves shall open to permit flow when inlet pressure is greater than the discharge pressure, and shall close tightly to prevent return flow when discharge pressure exceeds inlet pressure. The size of the valve, working pressure, manufacturer's name, initials, or trademark shall be cast on the body of each valve. Valves 2 inches and larger shall be outside lever and spring type.

a. Valves 2 inches and smaller shall be all bronze designed for screwed fittings, and shall conform to MSS SP-80, Class 150, Types 3 and 4 as suitable for the application.

b. Valves larger than 2 inches shall be iron body, bronze mounted, shall have flanged ends, and shall be the non-slam type. Flanges shall be the Class 125 type conforming to ASME B16.1.

2.4.2 Gate Valves

Gate valves shall be designed for a working pressure of not less than 150 psi. Valve connections shall be as required for the piping in which they are installed. Valves shall have a clear waterway equal to the full nominal

diameter of the valve, and shall be opened by turning counterclockwise. The operating nut or wheel shall have an arrow, cast in the metal, indicating the direction of opening.

a. Valves smaller than 3 inches shall be all bronze and shall conform to MSS SP-80, Type 1, Class 150.

b. Valves 3 inches and larger shall be iron body, bronze mounted, and shall conform to AWWA C500. Flanges shall not be buried. An approved pit shall be provided for all flanged connections.

c. Resilient-Seated Gate Valves: For valves 3 to 12 inches in size, resilient-seated gate valves shall conform to AWWA C509.

2.4.3 Vacuum and Air Relief Valves

Vacuum and air relief valves shall be of the size shown and shall be of a type that will release air and prevent the formation of a vacuum. The valves shall automatically release air when the lines are being filled with water and shall admit air into the line when water is being withdrawn in excess of the inflow. Valves shall be iron body with bronze trim and stainless steel float.

2.4.4 Indicator Post for Valves

Each valve shown on the drawings with the designation "P.I.V." shall be equipped with indicator post conforming to the requirements of NFPA 24. Operation shall be by a wrench which shall be attached to each post.

2.5 VALVE BOXES

Valve boxes shall be cast iron Cast-iron boxes shall be extension type with slide-type adjustment and with flared base. The minimum thickness of metal shall be 3/16 inch. The word "WATER" shall be cast in the cover. The box length shall adapt, without full extension, to the depth of cover required over the pipe at the valve location.

2.6 VALVE PITS

Valve pits shall be constructed at locations indicated or as required above and in accordance with the details shown. Concrete shall have compressive strength of 3000 psi in accordance with Section 03300CAST-IN-PLACE STRUCTURAL CONCRETE.

2.7 FIRE HYDRANTS

Hydrants shall be dry-barrel type conforming to AWWA C502 with valve opening at least 5 inches in diameter and designed so that the flange at the main valve seat can be removed with the main valve seat apparatus remaining intact, closed and reasonably tight against leakage and with a breakable valve rod coupling and breakable flange connections located no more than 8 inches above the ground grade . Hydrants shall have a 6 inch bell connection, two 2-1/2 inch hose connections and one 4-1/2 inch pumper connection. Outlets shall have American National Standard fire-hose coupling threads. Working parts shall be bronze. Design, material, and workmanship shall be equal to the latest stock pattern ordinarily produced by the manufacturer. Hydrants shall be painted with 1 coat of red iron oxide, zinc oxide primer conforming to SSPC Paint 25 and 2 finish coats of silicone alkyd paint conforming to SSPC Paint 21, of the installation's standard colors or as directed by the Contracting Officer

2.8 MISCELLANEOUS ITEMS

2.8.1 Service Clamps

Service clamps shall have a pressure rating not less than that of the pipe to be

connected and shall be either the single or double flattened strap type. Clamps shall have a galvanized malleable-iron body with cadmium plated straps and nuts. Clamps shall have a rubber gasket cemented to the body.

2.8.2 Corporation Stops

Corporation stops shall have standard corporation stop thread conforming to AWWA C800 on the inlet end, with flanged joints, compression pattern flared tube couplings, or wiped joints for connections to goosenecks.

2.8.3 Goosenecks

Copper tubing for gooseneck connections shall conform to the applicable requirements of ASTM B 88, Type K, annealed. Length of cable requirement connections shall be in accordance with standard practice.

2.8.4 Service Stops

Service stops shall be water-works inverted-ground-key type, oval or round flow way, tee handle, without drain. Pipe connections shall be suitable for the type of service pipe used. All parts shall be of bronze with female iron-pipe-size connections or compression-pattern flared tube couplings, and shall be designed for a hydrostatic test pressure not less than 200 psi.

2.8.5 Tapping Sleeves

Tapping sleeves of the sizes indicated for connection to existing main shall be the cast gray, ductile, or malleable iron, split-sleeve type with flanged or grooved outlet, and with bolts, follower rings and gaskets on each end of the sleeve. Construction shall be suitable for a maximum working pressure of 150 psi. Bolts shall have square heads and hexagonal nuts. Longitudinal gaskets and mechanical joints with gaskets shall be as recommended by the manufacturer of the sleeve. When using grooved mechanical tee, it shall consist of an upper housing with full locating collar for rigid positioning which engages a machine-cut hole in pipe, encasing an elastomeric gasket which conforms to the pipe outside diameter around the hole and a lower housing with positioning lugs, secured together during assembly by nuts and bolts as specified, pretorqued to 50 foot-pound.

2.8.6 Service Boxes

Service boxes shall be cast iron and shall be extension service boxes of the length required for the depth of the line, with either screw or slide-type adjustment. The boxes shall have housings of sufficient size to completely cover the service stop or valve and shall be complete with identifying covers.

2.8.7 Disinfection

Chlorinating materials shall conform to the following:

Chlorine, Liquid: AWWA B301.

Hypochlorite, Calcium and Sodium: AWWA B300.

PART 3 EXECUTION

3.1 INSTALLATION

3.1.1 Cutting of Pipe

Cutting of pipe shall be done in a neat and workmanlike manner without damage to the pipe. Unless otherwise recommended by the manufacturer and authorized by the Contracting Officer, cutting shall be done with an approved type mechanical

cutter. Wheel cutter shall be used when practicable. Copper tubing shall be cut square and all burrs shall be removed. Squeeze type mechanical cutters shall not be used for ductile iron.

3.1.2 Adjacent Facilities

3.1.2.1 Sewer Lines

Where the location of the water pipe is not clearly defined in dimensions on the drawings, the water pipe shall not be laid closer horizontally than 10 feet from a sewer except where the bottom of the water pipe will be at least 12 inches above the top of the sewer pipe, in which case the water pipe shall not be laid closer horizontally than 6 feet from the sewer. Where water lines cross under gravity-flow sewer lines, the sewer pipe, for a distance of at least 10 feet each side of the crossing, shall be fully encased in concrete or shall be made of pressure pipe with no joint located within 3 feet horizontally of the crossing. Water lines shall in all cases cross above sewage force mains or inverted siphons and shall be not less than 2 feet above the sewer main. Joints in the sewer main, closer horizontally than 3 feet to the crossing, shall be encased in concrete.

3.1.2.2 Water Lines

Water lines shall not be laid in the same trench with sewer lines, gas lines, fuel lines, or electric wiring.

3.1.2.3 Copper Tubing Lines

Copper tubing shall not be installed in the same trench with ferrous piping materials.

3.1.2.4 Nonferrous Metallic Pipe

Where nonferrous metallic pipe, e.g. copper tubing, crosses any ferrous piping material, a minimum vertical separation of 12 inchesshall be maintained between pipes.

3.1.3 Joint Deflection

3.1.3.1 Offset for Flexible Plastic Pipe

Maximum offset in alignment between adjacent pipe joints shall be as recommended by the manufacturer and approved by the Contracting Officer, but shall not exceed 5 degrees.

3.1.3.2 Allowable for RPMP Pipe

For pipe with bell and spigot rubber gasket joints, maximum allowable deflections from a straight line or grade shall be 4 degrees determined by the diameter, unless a lesser amount is recommended by the manufacturer. Short-radius curves and closures shall be formed by short lengths of pipe or fabricated specials specified.

3.1.4 Placing and Laying

Pipe and accessories shall be carefully lowered into the trench by means of derrick, ropes, belt slings, or other authorized equipment. Water-line materials shall not be dropped or dumped into the trench. Abrasion of the pipe coating shall be avoided. Except where necessary in making connections with other lines or as authorized by the Contracting Officer, pipe shall be laid with the bells facing in the direction of laying. The full length of each section of pipe shall rest solidly upon the pipe bed, with recesses excavated to accommodate bells, couplings, and joints. Pipe that has the grade or joint

disturbed after laying shall be taken up and relaid. Pipe shall not be laid in water or when trench conditions are unsuitable for the work. Water shall be kept out of the trench until joints are complete. When work is not in progress, open ends of pipe, fittings, and valves shall be securely closed so that no trench water, earth, or other substance will enter the pipes or fittings. Where any part of the coating or lining is damaged, the repair shall be made by and at the Contractor's expense in a satisfactory manner. Pipe ends left for future connections shall be valved, plugged, or capped, and anchored, as shown.

3.1.4.1 Plastic Pipe Installation

RTRP shall be installed in accordance with ASTM D 3839. RPMP shall be installed in accordance with the manufacturer's recommendations. PE Pipe shall be installed in accordance with ASTM D 2774. PVC pipe shall be installed in accordance with AWWA M23.

3.1.4.2 Piping Connections

Where connections are made between new work and existing mains, the connections shall be made by using specials and fittings to suit the actual conditions. When made under pressure, these connections shall be installed using standard methods as approved by the Contracting Officer. Connections to existing asbestos-cement pipe shall be made in accordance with ACPPA Work Practices.

3.1.4.3 Flanged Pipe

Flanged pipe shall only be installed above ground or with the flanges in valve pits.

3.1.5 Jointing

3.1.5.1 PE Pipe Requirements

Jointing shall comply with ASTM D 2657, Technique I-Socket Fusion or Technique II-Butt Fusion.

3.1.5.2 PVC Plastic Pipe Requirements

a. Pipe less than 4 inch diameter: Threaded joints shall be made by wrapping the male threads with approved thread tape or applying an approved lubricant, then threading the joining members together. The joint shall be tightened using strap wrenches to prevent damage to the pipe and/or fitting. To avoid excessive torque, joints shall be tightened no more than one thread past hand-tight. Preformed rubber-ring gaskets for elastomeric-gasket joints shall be made in accordance with ASTM F 477 and as specified. Pipe ends for push-on joints shall be beveled to facilitate assembly and marked to indicate when the pipe is fully seated. The gasket shall be prelubricated to prevent displacement. The gasket and ring groove in the bell or coupling shall match. The manufacturer of the pipe or fitting shall supply the elastomeric gasket. Couplings shall be provided with stops or centering rings to assure that the coupling is centered on the joint. Solvent cement joints shall use sockets conforming to ASTM D 2467. The solvent cement used shall meet the requirements of ASTM D 2564 ; the joint assembly shall be made in accordance with ASTM D 2855 and the manufacturer's specific recommendations.

b. Pipe 4 through 12 inch diameter: Joints shall be elastomeric gasket as specified in AWWA C900. Jointing procedure shall be as specified for pipe less than 4 inch diameter with configuration using elastomeric ring gasket.

3.1.5.3 RTRP I, RTRP II and RPMP Pipe

a. RTRP I: Assembly of the pipe shall be done in conformance with the manufacturer's written instruction and installation procedures. Field joints shall be prepared as specified by the pipe manufacturer. Several pipe joints having interference-fit type couplings may be field bonded and cured simultaneously. However, the pipe shall not be moved and additional joints shall not be made until the previously laid joints are completely cured. Joints not having interference-fit type coupling shall be fitted with a clamp which shall hold the joint rigidly in place until the joint cement has completely cured. The clamps shall have a protective material on the inner surface to prevent damage to the plastic pipe when the clamp is tightened in place. The pipe manufacturer shall provide a device or method to determine when the joint is pulled against the pipe stop. Additionally, the pipe manufacturer shall furnish a gauge to measure the diameter of the spigot ends to ensure the diameter conforms to the tolerances specified by the manufacturer. All pipe ends shall be gauged. Factory certified tests shall have been satisfactorily performed to verify that short-term rupture strength is 1,500 psior greater when carried out in accordance with ASTM D 1599. At any ambient temperature, field bonded epoxy-cemented joints shall be cured with a self-regulating, thermostatically temperature controlled, electrical heating blanket for the time and temperature recommended by the manufacturer for the applicable size and type of joint, or by an alternate heating method recommended by the manufacturer and approved by the Contracting Officer. The joint sections shall not be moved during heating, or until the joint has cooled to ambient temperature.

b. RTRP II: A reinforced overlay joint shall be used to join sections together through a placement of layers of reinforcement fiberglass roving, mat, tape or fabric thoroughly saturated with compatible catalyzed resin.

c. RPMP: Bell and spigot gasket-sealing coupling shall be used to connect pipes. The spigot shall be lubricated prior to push-together assembly.

d. Fittings and Specials for RTRP and RPMP Pipe: Metal to RTRP and RPMP pipe connections shall be made by bolting steel flanges to RTRP and RPMP pipe flanges. Cast-iron fitting with gasket bell or mechanical joint may be used with RTRP if pipe has cast iron outside diameter. Steel flanges shall be flat-faced type. Where raised-face steel flanges are used, spacer rings shall be used to provide a flat-face seat for RTRP and RPMP pipe flanges. A full-face Buna "N" gasket 1/8 inch thick with a shore hardness of 50-60 shall be used between all flanged connections. The RTRP and RPMP pipe flange shall have raised sealing rings. Flat washers shall be used under all nuts and bolts on RTRP and RPMP pipe flanges. Bolts and nuts shall be of noncorrosive steel and torqued to not more than 100 foot pounds.Flanges shall not be buried. A concrete pit shall be provided for all flanged connections.

3.1.6 Installation of Service Lines

Service lines shall include the pipeline connecting building piping to water distribution lines to the connections with the building service at a point approximately 5 feet outside the building where such building service exists. Where building services are not installed, the Contractor shall terminate the service lines approximately 5 feet from the site of the proposed building at a point designated by the Contracting Officer. Such service lines shall be closed with plugs or caps. All service stops and valves shall be provided with service boxes. Service lines shall be constructed in accordance with the following requirements:

3.1.6.1 Service Lines 50 mm (2 Inches) and Smaller

Service lines 2 inches and smaller shall be connected to the main by a directly-tapped corporation stop or by a service clamp. A corporation stop and a copper gooseneck shall be provided with either type of connection. Maximum sizes for directly-tapped corporation stops and for outlets with service clamps shall be as in TABLE I. Where 2 or more gooseneck connections to the main are required for an individual service, such connections shall be made with standard branch connections. The total clear area of the branches shall be at least equal to the clear area of the service which they are to supply.

TABLE I. SIZE OF CORPORATION STOPS AND OUTLET

Pipe Size Inches	Corporation Stops, Inches For Ductile-Iron Pipe	Outlets w/Service Clamps, Inches Single & Double Strap
3	--	1
4	1	1
6	1-1/4	1-1/2
8	1-1/2	2
10	1-1/2	2
12 & larger	2	2

NOTE:

a. Service lines 1-1/2 inches and smaller shall have a service stop.

b. Service lines 2 inches in size shall have a gate valve.

3.1.6.2 Service Lines Larger than 2 Inches

Service lines larger than 2 inches shall be connected to the main by a tapped saddle, tapping sleeve and valve, service clamp or reducing tee, depending on the main diameter and the service line diameter, and shall have a gate valve.

3.1.6.3 Service Lines for Sprinkler Supplies

Water service lines used to supply building sprinkler systems for fire protection shall be connected to the water distribution main in accordance with NFPA 24.

3.1.7 Setting of Fire Hydrants, Valves and Valve Boxes

3.1.7.1 Location of Fire Hydrants

Fire hydrants shall be located and installed as shown. Each hydrant shall be connected to the main with a 6 inch branch line having at least as much cover as the distribution main. Hydrants shall be set plumb with pumper nozzle facing the roadway, with the center of the lowest outlet not less than 18 inches above the finished surrounding grade, and the operating nut not more than 48 inches above the finished surrounding grade. Except where approved otherwise, the backfill around hydrants shall be thoroughly compacted to the finished grade immediately after installation to obtain beneficial use of the hydrant as soon as practicable. The hydrant shall be set upon a slab of concrete not less than 4 inches thick and 15 inchessquare. Not less than 7 cubic feet of free-draining

broken stone or gravel shall be placed around and beneath the waste opening of dry barrel hydrants to ensure drainage.

3.1.7.2 Location of Valves

After delivery, valves, including those in hydrants, shall be drained to prevent freezing and shall have the interiors cleaned of all foreign matter before installation. Stuffing boxes shall be tightened and hydrants and valves shall be fully opened and fully closed to ensure that all parts are in working condition. Valves and valve boxes shall be installed where shown or specified, and shall be set plumb. Valve boxes shall be centered on the valves. Boxes shall be installed over each outside gate valve unless otherwise shown. Where feasible, valves shall be located outside the area of roads and streets. Earth fill shall be tamped around each valve box or pit to a distance of 4 feet on all sides of the box, or the undisturbed trench face if less than 4 feet.

3.1.7.3 Location of Service Boxes

Where water lines are located below paved streets having curbs, the boxes shall be installed directly back of the curbs. Where no curbing exists, service boxes shall be installed in accessible locations, beyond the limits of street surfacing, walks and driveways.

3.1.8 Thrust Restraint

Plugs, caps, tees and bends deflecting 11.25 degrees or more, either vertically or horizontally, on waterlines 4 inches in diameter or larger, and fire hydrants shall be provided with thrust restraints. Valves shall be securely anchored or shall be provided with thrust restraints to prevent movement. Thrust restraints shall be either thrust blocks or, for ductile-iron pipes, restrained joints.

3.1.8.1 Thrust Blocks

Thrust blocking shall be concrete of a mix not leaner than: 1 cement, 2-1/2 sand, 5 gravel; and having a compressive strength of not less than 2,000 psi after 28 days. Blocking shall be placed between solid ground and the hydrant or fitting to be anchored. Unless otherwise indicated or directed, the base and thrust bearing sides of thrust blocks shall be poured directly against undisturbed earth. The sides of thrust blocks not subject to thrust may be poured against forms. The area of bearing shall be as shown or as directed. Blocking shall be placed so that the fitting joints will be accessible for repair. Steel rods and clamps, protected by galvanizing or by coating with bituminous paint, shall be used to anchor vertical down bends into gravity thrust blocks.

3.2 HYDROSTATIC TESTS

Where any section of a water line is provided with concrete thrust blocking for fittings or hydrants, the hydrostatic tests shall not be made until at least 5 days after installation of the concrete thrust blocking, unless otherwise approved.

3.2.1 Pressure Test

After the pipe is laid, the joints completed, fire hydrants permanently installed, and the trench partially backfilled leaving the joints exposed for examination, the newly laid piping or any valved section of piping shall, unless otherwise specified, be subjected for 1 hour to a hydrostatic pressure test of 200 psi. Each valve shall be opened and closed several times during the test. Exposed pipe, joints, fittings, hydrants, and valves shall be carefully examined during the partially open trench test. Joints showing visible leakage shall be replaced or remade as necessary. Cracked or defective pipe, joints,

fittings, hydrants and valves discovered in consequence of this pressure test shall be removed and replaced with sound material, and the test shall be repeated until the test results are satisfactory. The requirement for the joints to remain exposed for the hydrostatic tests may be waived by the Contracting Officer when one or more of the following conditions is encountered:

a. Wet or unstable soil conditions in the trench.

b. Compliance would require maintaining barricades and walkways around and across an open trench in a heavily used area that would require continuous surveillance to assure safe conditions.

c. Maintaining the trench in an open condition would delay completion of the project.

The Contractor may request a waiver, setting forth in writing the reasons for the request and stating the alternative procedure proposed to comply with the required hydrostatic tests. Backfill placed prior to the tests shall be placed in accordance with the requirements of Section 02316aEXCAVATION, TRENCHING, AND BACKFILLING FOR UTILITIES SYSTEMS.

3.2.2 Leakage Test

Leakage test shall be conducted after the pressure tests have been satisfactorily completed. The duration of each leakage test shall be at least 2 hours, and during the test the water line shall be subjected to not less than 200 psi pressure. Leakage is defined as the quantity of water to be supplied into the newly laid pipe, or any valved or approved section, necessary to maintain pressure within 5 psi of the specified leakage test pressure after the pipe has been filled with water and the air expelled. Piping installation will not be accepted if leakage exceeds the allowable leakage which is determined by the following formula:

L = 0.0001351ND(P raised to 0.5 power)

L = Allowable leakage in gallons per hour
N = Number of joints in the length of pipeline tested
D = Nominal diameter of the pipe in inches
P = Average test pressure during the leakage test, in psi gauge

Should any test of pipe disclose leakage greater than that calculated by the above formula, the defective joints shall be located and repaired until the leakage is within the specified allowance, without additional cost to the Government.

3.2.3 Time for Making Test

Except for joint material setting or where concrete thrust blocks necessitate a 5-day delay, pipelines jointed with rubber gaskets, mechanical or push-on joints, or couplings may be subjected to hydrostatic pressure, inspected, and tested for leakage at any time after partial completion of backfill. Cement-mortar lined pipe may be filled with water as recommended by the manufacturer before being subjected to the pressure test and subsequent leakage test.

3.2.4 Concurrent Hydrostatic Tests

The Contractor may elect to conduct the hydrostatic tests using either or both of the following procedures. Regardless of the sequence of tests employed, the results of pressure tests, leakage tests, and disinfection shall be as specified. Replacement, repair or retesting required shall be accomplished by the Contractor at no additional cost to the Government.

a. Pressure test and leakage test may be conducted concurrently.

b. Hydrostatic tests and disinfection may be conducted concurrently, using the water treated for disinfection to accomplish the hydrostatic tests. If water is lost when treated for disinfection and air is admitted to the unit being tested, or if any repair procedure results in contamination of the unit, disinfection shall be reaccomplished.

3.3 BACTERIOLOGICAL DISINFECTION

3.3.1 Bacteriological Disinfection

Before acceptance of potable water operation, each unit of completed waterline shall be disinfected as specified. After pressure tests have been made, the unit to be disinfected shall be thoroughly flushed with water until all entrained dirt and mud have been removed before introducing the chlorinating material. The chlorinating material shall be either liquid chlorine, calcium hypochlorite, or sodium hypochlorite, conforming to paragraph MISCELLANEOUS ITEMS. The chlorinating material shall provide a dosage of not less than 50 ppm and shall be introduced into the water lines in an approved manner. Polyvinyl Chloride (PVC) pipe lines shall be chlorinated using only the above specified chlorinating material in solution. The agent shall not be introduced into the line in a dry solid state. The treated water shall be retained in the pipe long enough to destroy all non-spore forming bacteria. Except where a shorter period is approved, the retention time shall be at least 24 hours and shall produce not less than 25 ppm of free chlorine residual throughout the line at the end of the retention period. Valves on the lines being disinfected shall be opened and closed several times during the contact period. The line shall then be flushed with clean water until the residual chlorine is reduced to less than 1.0 ppm. During the flushing period, each fire hydrant on the line shall be opened and closed several times. From several points in the unit,personnel from the Contractor's commercial laboratory shall take at least 3 water samples from different points, approved by the Contracting Officer, in proper sterilized containers and perform a bacterial examination in accordance with state approved methods. The commercial laboratory shall be certified by the state's approving authority for examination of potable water. The disinfection shall be repeated until tests indicate the absence of pollution for at least 2 full days. The unit will not be accepted until satisfactory bacteriological results have been obtained.

3.4 CLEANUP

Upon completion of the installation of water lines, and appurtenances, all debris and surplus materials resulting from the work shall be removed.

-- End of Section --

SECTION TABLE OF CONTENTS

DIVISION 02 - SITE WORK

SECTION 02531A

SANITARY SEWERS

04/01

PART 1 GENERAL

1.1 REFERENCES
1.2 GENERAL REQUIREMENTS
1.3 SUBMITTALS

PART 2 PRODUCTS

2.1 PIPE
2.1.1 Plastic Pipe
2.1.1.1 ABS Pipe
2.1.1.2 PVC Pipe
2.1.2 Reinforced Plastic Mortar Pipe (RPMP)
2.1.3 Reinforced Thermosetting Resin Pipe (RTRP)
2.1.3.1 Filament Wound RTRP-I
2.1.3.2 Centrifugally Cast RTRP-II
2.2 PIPE FITTINGS
2.2.1 Fittings for Plastic Pipe
2.2.1.1 Fittings for ABS Pipe
2.2.1.2 Fittings for PVC Pipe
2.2.2 Fittings for RPMP
2.2.3 Fittings for RTRP
2.3 JOINTS
2.3.1 Plastic Pipe Jointing
2.3.1.1 ABS Pipe Jointing
2.3.2 RPMP Jointing
2.3.3 RTRP Jointing
2.4 FRAMES AND COVERS
2.5 MANHOLE STEPS
2.6 CEMENT MORTAR
2.6.1 Portland Cement
2.6.2 Portland Cement Concrete
2.7 STRUCTURES
2.7.1 Precast Reinforced Concrete Manhole Sections

PART 3 EXECUTION

3.1 INSTALLATION
3.1.1 Adjacent Facilities
3.1.1.1 Water Lines
3.1.2 Pipe Laying
3.1.2.1 Caulked Joints
3.1.2.2 Trenches
3.1.2.3 Backfill
3.1.2.4 Width of Trench
3.1.2.5 Jointing
3.1.2.6 Handling and Storage
3.1.3 Leakage Tests
3.1.4 Test for Deflection
3.2 INSTALLATION OF WYE BRANCHES

3.3 MANHOLE DETAILS
3.3.1 General Requirements
3.3.2 Jointing, Plastering and Sealing
3.3.3 Setting of Frames and Covers
3.3.4 External Preformed Rubber Joint Seals
3.4 CONNECTING TO EXISTING MANHOLES
3.5 BUILDING CONNECTIONS
3.6 CLEANOUTS AND OTHER APPURTENANCES

-- End of Section Table of Contents --

SECTION 02531A

SANITARY SEWERS
04/01

PART 1 GENERAL

1.1 REFERENCES

The publications listed below form a part of this specification to the extent referenced. The publications are referred to in the text by basic designation only.

AMERICAN SOCIETY FOR TESTING AND MATERIALS (ASTM)

ASTM C 33	(2001a) Concrete Aggregates
ASTM C 94/C 94M	(2000) Ready-Mixed Concrete
ASTM C 150	(2002) Portland Cement
ASTM C 260	(2001) Air-Entraining Admixtures for Concrete
ASTM C 270	(2001) Mortar for Unit Masonry
ASTM C 478	(1997) Precast Reinforced Concrete Manhole Sections
ASTM C 972	(2000) Compression-Recovery of Tape Sealant
ASTM D 412	(1998a) Vulcanized Rubber and Thermoplastic Rubbers and Thermoplastic Elastomers - Tension
ASTM D 624	(2000) Tear Strength of Conventional Vulcanized Rubber and Thermoplastic Elastomers
ASTM D 1784	(1999a) Rigid Poly(Vinyl Chloride) (PVC) Compounds and Chlorinated Poly(Vinyl Chloride) (CPVC) Compounds
ASTM D 2680	(2001)Acrylonitrile-Butadiene-Styrene (ABS) and Poly(Vinyl Chloride) (PVC) Composite Sewer Piping
ASTM D 2751	(1996a) Acrylonitrile-Butadiene-Styrene (ABS) Sewer Pipe and Fittings
ASTM D 2996	(2001) Filament-Wound "Fiberglass" (Glass-Fiber-Reinforced Thermosetting-Resin) Pipe
ASTM D 2997	(2001) Centrifugally Cast "Fiberglass" (Glass-Fiber-Reinforced-Thermosetting-Resin) Pipe
ASTM D 3034	(2000) Type PSM Poly(Vinyl Chloride) (PVC) Sewer Pipe and Fittings
ASTM D 3212	(1996a) Joints for Drain and Sewer Plastic Pipes

	Using Flexible Elastomeric Seals
ASTM D 3262	(2001) "Fiberglass" (Glass-Fiber-Reinforced Thermosetting-Resin) Sewer Pipe
ASTM D 3840	(2001) "Fiberglass" (Glass-Fiber-Reinforced Thermosetting-Resin) Pipe Fittings for Nonpressure Applications
ASTM D 4161	(2001)"Fiberglass" (Glass-Fiber-Reinforced Thermosetting Resin) Pipe Joints Using Flexible Elastomeric Seals
ASTM F 402	(1993; R 1999) Safe Handling of Solvent Cements, Primers, and Cleaners Used for Joining Thermoplastic Pipe and Fittings
ASTM F 477	(1999) Elastomeric Seals (Gaskets) for Joining Plastic Pipe
ASTM F 794	(1999) Poly(Vinyl Chloride) (PVC) Profile Gravity Sewer Pipe and Fittings Based on Controlled Inside Diameter
ASTM F 949	(2001) Poly(Vinyl Chloride) (PVC) Corrugated Sewer Pipe with a Smooth Interior and Fittings

NATIONAL FIRE PROTECTION ASSOCIATION (NFPA)

NFPA 49	(1994) Hazardous Chemicals Data
NFPA 325-1	(1994) Fire Hazard Properties of Flammable Liquids, Gases, and Volatile Solids
NFPA 704	(2001) Identification of the Hazards of Materials for Emergency Response

UNI-BELL PVC PIPE ASSOCIATION (UBPPA)

UBPPA UNI-B-9	(1990; Addenda 1994) Recommended Performance Specification for Polyvinyl Chloride (PVC) Profile Wall Gravity Sewer Pipe and Fittings Based on Controlled Inside Diameter (Nominal Pipe Sizes 4-48 inch)

1.2 GENERAL REQUIREMENTS

The construction required herein shall include appurtenant structures and building sewers to points of connection with the building drains 5 feet outside the building to which the sewer system is to be connected. The Contractor shall replace damaged material and redo unacceptable work at no additional cost to the Government. Excavation and backfilling is specified in Section 02316a EXCAVATION, TRENCHING, AND BACKFILLING FOR UTILITIES SYSTEMS. Backfilling shall be accomplished after inspection by the Contracting Officer. Force mains are specified in Section 02532a FORCE MAINS ; SEWER. Before, during, and after installation, plastic pipe and fittings shall be protected from any environment that would result in damage or deterioration to the material. The Contractor shall have a copy of the manufacturer's instructions available at the construction site at all times and shall follow these instructions unless directed otherwise by the Contracting Officer. Solvents, solvent compounds, lubricants, elastomeric gaskets, and any similar materials required to install the plastic pipe shall be stored in accordance with the manufacturer's recommendation and shall be discarded if the storage period exceeds the

recommended shelf life. Solvents in use shall be discarded when the recommended pot life is exceeded.

1.3 SUBMITTALS

Government approval is required for submittals with a "G" designation; submittals not having a "G" designation are for information only. When used, a designation following the "G" designation identifies the office that will review the submittal for the Government. The following shall be submitted in accordance with Section 01330 SUBMITTAL PROCEDURES:

SD-07 Certificates

Portland Cement;

Certificates of compliance stating the type of cement used in manufacture of concrete pipe, fittings and precast manholes.

Joints;

Certificates of compliance stating that the fittings or gaskets used for waste drains or lines designated on the plans as WD are oil and Jet Fuel resistant.

PART 2 PRODUCTS

2.1 PIPE

Pipe shall conform to the respective specifications and other requirements specified below.

2.1.1 Plastic Pipe

Acrylonitrile-butadiene-styrene (ABS) and polyvinyl chloride (PVC) composite sewer piping shall conform to ASTM D 2680. Size 8 inch through 15 inch diameter.

2.1.1.1 ABS Pipe

ASTM D 2751.

2.1.1.2 PVC Pipe

ASTM D 3034, Type PSM with a maximum SDR of 35, Size 15 inches or less in diameter. ASTM F 949 for corrugated sewer pipes with a smooth interior. UBPPA UNI-B-9 and ASTM F 794, Series 46, for ribbed sewer pipe with smooth interior, size 8 inch through 48 inch diameters. PVC shall be certified by the compounder as meeting the requirements of ASTM D 1784, cell Class 12454B. The pipe stiffness shall be greater than or equal to 735/D for cohesionless material pipe trench backfills.

2.1.2 Reinforced Plastic Mortar Pipe (RPMP)

Reinforced plastic mortar pipe shall be produced by centrifugal casting and shall have an outside diameter equal to dectile iron pipe dimensions from 18 inch to 48 inch. The inner surface of the pipe shall have a smooth uniform continuous resin-rich surface liner. The minimum pipe stiffness shall be 36 psi. RPMP shall be in accordance with ASTM D 3262.

2.1.3 Reinforced Thermosetting Resin Pipe (RTRP)

ASTM D 3262.

2.1.3.1 Filament Wound RTRP-I

RTRP-I shall conform to ASTM D 2996, except pipe shall have an outside diameter equal to cast iron outside diameter or standard weight steel pipe. The pipe shall be suitable for a normal working pressure of 150 psi at 73 degrees F.The inner surface of the pipe shall have a smooth uniform continuous resin-rich surface liner conforming to ASTM D 2996.

2.1.3.2 Centrifugally Cast RTRP-II

RTRP-II shall conform to ASTM D 2997. Pipe shall have an outside diameter equal to standard weight steel pipe.

2.2 PIPE FITTINGS

2.2.1 Fittings for Plastic Pipe

ABS and PVC composite sewer pipe fittings shall conform to ASTM D 2680.

2.2.1.1 Fittings for ABS Pipe

ASTM D 2751.

2.2.1.2 Fittings for PVC Pipe

ASTM D 3034 for type PSM pipe. ASTM F 949 for corrugated sewer pipe with a smooth interior. UBPPA UNI-B-9 and ASTM F 794, Series 46, for ribbed sewer pipe with smooth interior.

2.2.2 Fittings for RPMP

ASTM D 3840.

2.2.3 Fittings for RTRP

ASTM D 3262.

2.3 JOINTS

Joints installation shall comply with the manufacturer's instructions. Fittings and gaskets utilized for waste drains or industrial waste lines shall be certified by the manufacturer as oil and Jet Fuel resistant.

2.3.1 Plastic Pipe Jointing

Flexible plastic pipe (PVC) gasketed joints shall conform to ASTM D 3212.

2.3.1.1 ABS Pipe Jointing

ASTM D 2751, solvent weld or bell and spigot O-ring joint, size 12 inches or less in diameter, dimensions and tolerances in accordance with Table 2 of ASTM D 2751.

2.3.2 RPMP Jointing

Joints shall be bell and spigot gasket coupling utilizing an elastomeric gasket in accordance with ASTM D 4161 and ASTM F 477.

2.3.3 RTRP Jointing

Joints shall be bell and spigot type utilizing an elastomeric gasket in

accordance with ASTM F 477.

2.4 FRAMES AND COVERS

Frames and covers shall be cast iron or ductile iron. Cast iron frames and covers shall be as indicated or shall be of type suitable for the application, circular, without vent holes. The frames and covers shall have a combined weight of not less than 400 pounds. The word "Sewer" shall be stamped or cast into covers so that it is plainly visible.

2.5 MANHOLE STEPS

Manhole step shall be copolymer polypropylene plastic in conformance with ASTM C 478.

2.6 CEMENT MORTAR

Cement mortar shall conform to ASTM C 270, Type M with Type II cement.

2.6.1 Portland Cement

Portland cement shall conform to ASTM C 150, Type V for concrete used in concrete pipe, concrete pipe fittings, manholes, concrete cradle, concrete encasement, and thrust blocking. Air-entraining admixture conforming to ASTM C 260 shall be used with Type V cement. Where aggregates are alkali reactive, as determined by Appendix XI of ASTM C 33, a cement containing less than 0.60 percent alkalies shall be used.

2.6.2 Portland Cement Concrete

Portland cement concrete shall conform to ASTM C 94/C 94M, compressive strength of 4000 psi at 28 days, except for concrete cradle and encasement or concrete blocks for manholes. Concrete used for cradle and encasement shall have a compressive strength of 2500 psiminimum at 28 days. Concrete in place shall be protected from freezing and moisture loss for 7 days.

2.7 STRUCTURES

2.7.1 Precast Reinforced Concrete Manhole Sections

Precast reinforced concrete manhole sections shall conform to ASTM C 478, except that portland cement shall be as specified herein. Joints shall be cement mortar, an approved mastic, rubber gaskets, a combination of these types; or the use of external preformed rubber joint seals and extruded rolls of rubber with mastic adhesive on one side.

PART 3 EXECUTION

3.1 INSTALLATION

3.1.1 Adjacent Facilities

3.1.1.1 Water Lines

Where the location of the sewer is not clearly defined by dimensions on the drawings, the sewer shall not be closer horizontally than 10 feet to a water-supply main or service line, except that where the bottom of the water pipe will be at least 12 inches above the top of the sewer pipe, the horizontal spacing may be a minimum of 6 feet. Where gravity-flow sewers cross above water lines, the sewer pipe for a distance of 10 feet on each side of the crossing shall be fully encased in concrete or shall be acceptable pressure pipe with no joint closer horizontally than 3 feet to the crossing. The thickness of the concrete encasement including that at the pipe joints shall be

not less than 4 inches.

3.1.2 Pipe Laying

a. Pipe shall be protected during handling against impact shocks and free fall; the pipe interior shall be free of extraneous material.

b. Pipe laying shall proceed upgrade with the spigot ends of bell-and-spigot pipe and tongue ends of tongue-and-groove pipe pointing in the direction of the flow. Each pipe shall be laid accurately to the line and grade shown on the drawings. Pipe shall be laid and centered so that the sewer has a uniform invert. As the work progresses, the interior of the sewer shall be cleared of all superfluous materials.

c. Before making pipe joints, all surfaces of the portions of the pipe to be joined shall be clean and dry. Lubricants, primers, and adhesives shall be used as recommended by the pipe manufacturer. The joints shall then be placed, fitted, joined, and adjusted to obtain the degree of water tightness required.

d. ABS composite pipe ends with exposed truss and filler material shall be coated with solvent weld material before making the joint to prevent water or air passage at the joint between the inner and outer wall of the pipe.

e. Installations of solvent weld joint pipe, using ABS or PVC pipe and fittings shall be in accordance with ASTM F 402. The Contractor shall ensure adequate trench ventilation and protection for workers installing the pipe.

3.1.2.1 Caulked Joints

The packing material shall be well packed into the annular space to prevent the entrance of lead into the pipe. The remainder of the space shall be filled with molten lead that is hot enough to show a rapid change in color when stirred. Scum shall be removed before pouring. The lead shall be caulked to form a tight joint without overstraining the bell and shall have a minimum depth of 1 inch after caulking.

3.1.2.2 Trenches

Trenches shall be kept free of water and as dry as possible during bedding, laying, and jointing and for as long a period as required. When work is not in progress, open ends of pipe and fittings shall be satisfactorily closed so that no trench water or other material will enter the pipe or fittings.

3.1.2.3 Backfill

As soon as possible after the joint is made, sufficient backfill material shall be placed along the pipe to prevent pipe movement off line or grade. Plastic pipe shall be completely covered to prevent damage from ultraviolet light.

3.1.2.4 Width of Trench

If the maximum width of the trench at the top of the pipe, as specified in Section 02316a EXCAVATION, TRENCHING, AND BACKFILLING FOR UTILITIES SYSTEMS, is exceeded for any reason other than by direction, the Contractor shall install, at no additional cost to the Government, concrete cradling, pipe encasement, or other bedding required to support the added load of the backfill.

3.1.2.5 Jointing

Joints between different pipe materials shall be made as specified, using

approved jointing materials.

3.1.2.6 Handling and Storage

Pipe, fittings and joint material shall be handled and stored in accordance with the manufacturer's recommendations. Storage facilities for plastic pipe, fittings, joint materials and solvents shall be classified and marked in accordance with NFPA 704, with classification as indicated in NFPA 49 and NFPA 325-1.

3.1.3 Leakage Tests

Lines shall be tested for leakage by infiltration tests or exfiltration tests, as appropriate. Prior to infiltration or exfiltration tests, the trench shall be backfilled up to at least the lower half of the pipe. If required, sufficient additional backfill shall be placed to prevent pipe movement during testing, leaving the joints uncovered to permit inspection. Visible leaks encountered shall be corrected regardless of leakage test results. When the water table is 2 feet or more above the top of the pipe at the upper end of the pipeline section to be tested, infiltration shall be measured using a suitable weir or other device acceptable to the Contracting Officer. When the Contracting Officer determines that infiltration cannot be properly tested, an exfiltration test shall be made by filling the line to be tested with water so that a head of at least 2 feet is provided above both the water table and the top of the pipe at the upper end of the pipeline to be tested. The filled line shall be allowed to stand until the pipe has reached its maximum absorption, but not less than 4 hours. After absorption, the head shall be re-established. The amount of water required to maintain this water level during a 2-hour test period shall be measured. Leakage as measured by either the infiltration test or exfiltration test shall not exceed 25 gal per inch diameter per mile of pipeline per day. When leakage exceeds the maximum amount specified, satisfactory correction shall be made and retesting accomplished. Testing, correction, and retesting shall be made at no additional cost to the Government.

3.1.4 Test for Deflection

When flexible pipe is used, a deflection test shall be made on the entire length of the installed pipeline not less than 30 days after the completion of all work including the leakage test, backfill, and placement of any fill, grading, paving, concrete, or superimposed loads. Deflection shall be determined by use of a deflection device or by use of a spherical, spheroidal, or elliptical ball, a cylinder, or circular sections fused to a common shaft. The ball, cylinder, or circular sections shall have a diameter, or minor diameter as applicable, of 92.5 percent of the inside diameter of the pipe, but 95 percent for RPMP and RTRP. A tolerance of plus 0.5 percent will be permitted. The ball, cylinder, or circular sections shall be of a homogeneous material throughout, shall have a density greater than 1.0 as related to water at 39.2 degrees F, and shall have a surface brinell hardness of not less than 150. The device shall be center bored and through bolted with a 1/4 inch minimum diameter steel shaft having a yield strength of 70,000 psi or more, with eyes at each end for attaching pulling cables. The eye shall be suitably backed with flange or heavy washer; a pull exerted on the opposite end of the shaft shall produce compression throughout the remote end of the ball, cylinder or circular section. Circular sections shall be spaced so that the distance from the external faces of the front and back sections shall equal or exceed the diameter of the circular section. Failure of the ball, cylinder, or circular section to pass freely through a pipe run, either by being pulled through or by being flushed through with water, shall be cause for rejection of that run. When a deflection device is used for the test in lieu of the ball, cylinder, or circular sections described, such device shall be approved prior to use. The device shall be sensitive to 1.0 percent of the diameter of the pipe being measured and shall be accurate to 1.0 percent of the indicated dimension. Installed pipe showing deflections greater than 7.5 percent of the normal

diameter of the pipe, or 5 percent for RTRP and RPMP, shall be retested by a run from the opposite direction. If the retest also fails, the suspect pipe shall be replaced at no cost to the Government.

3.2 INSTALLATION OF WYE BRANCHES

Wye branches shall be installed where sewer connections are indicated or where directed. Cutting into piping for connections shall not be done except in special approved cases. When the connecting pipe cannot be adequately supported on undisturbed earth or tamped backfill, the pipe shall be encased in concrete backfill or supported on a concrete cradle as directed. Concrete required because of conditions resulting from faulty construction methods or negligence by the Contractor shall be installed at no additional cost to the Government. The installation of wye branches in an existing sewer shall be made by a method which does not damage the integrity of the existing sewer. One acceptable method consists of removing one pipe section, breaking off the upper half of the bell of the next lower section and half of the running bell of wye section. After placing the new section, it shall be rotated so that the broken half of the bell will be at the bottom. The two joints shall then be made with joint packing and cement mortar.

3.3 MANHOLE DETAILS

3.3.1 General Requirements

Manholes shall be constructed of precast concrete manhole sections. The invert channels shall be smooth and semicircular in shape conforming to the inside of the adjacent sewer section. Changes in direction of flow shall be made with a smooth curve of as large a radius as the size of the manhole will permit. Changes in size and grade of the channels shall be made gradually and evenly. The invert channels shall be formed directly in the concrete of the manhole base, or shall be built up with brick and mortar, or shall be half tile laid in concrete, or shall be constructed by laying full section sewer pipe through the manhole and breaking out the top half after the surrounding concrete has hardened. Pipe connections shall be made to manhole using water stops, standard O-ring joints, special manhole coupling, or shall be made in accordance with the manufacturer's recommendation. The Contractor's proposed method of connection, list of materials selected, and specials required, shall be approved prior to installation. The floor of the manhole outside the channels shall be smooth and shall slope toward the channels not less than 1 inch per foot nor more than 2 inches per foot. Free drop inside the manholes shall not exceed 18 inches, measured from the invert of the inlet pipe to the top of the floor of the manhole outside the channels; drop manholes shall be constructed whenever the free drop would otherwise be greater than 1 foot 6 inches.

3.3.2 Jointing, Plastering and Sealing

Mortar joints shall be completely filled and shall be smooth and free from surplus mortar on the inside of the manhole. Mortar and mastic joints between precast rings shall be full-bedded in jointing compound and shall be smoothed to a uniform surface on both the interior and exterior of the manhole. Installation of rubber gasket joints between precast rings shall be in accordance with the recommendations of the manufacturer. Precast rings may also be sealed by the use of extruded rolls of rubber with mastic adhesive on one side.

3.3.3 Setting of Frames and Covers

Unless otherwise indicated, tops of frames and covers shall be set flush with finished grade in paved areas or 2 inches higher than finished grade in unpaved areas. Frame and cover assemblies shall be sealed to manhole sections using external preformed rubber joint seals that meet the requirements of ASTM D 412 and ASTM D 624, or other methods specified in paragraph Jointing, Plastering

and Sealing, unless otherwise specified.

3.3.4 External Preformed Rubber Joint Seals

External preformed rubber joint seals and extruded rolls of rubber with mastic adhesive shall meet the requirements of ASTM D 412 and ASTM C 972 to ensure conformance with paragraph Leakage Tests. The seal shall be multi-section with neoprene rubber top section and all lower sections made of Ethylene Propylene Di Monomer (EPDM) rubber with a minimum thickness of 60 mils. Each unit shall consist of a top and a bottom section and shall have mastic on the bottom of the bottom section and mastic on the top and bottom of the top section. The mastic shall be non-hardening butyl rubber sealant and shall seal to the cone/top slab of the manhole/catch basin and over the lip of the casting. One unit shall seal a casting and up to six, 2 inch adjusting rings. The bottom section shall be 12 inches in height. A 6 inch high top section will cover up to two, 2 inch adjusting rings. A 12 inch high bottom section will cover up to six, 2 inch adjusting rings. Extension sections shall cover up to two more adjusting rings. Each extension shall overlap the bottom section by 2 inches and shall be overlapped by the top section by 2 inches.

3.4 CONNECTING TO EXISTING MANHOLES

Pipe connections to existing manholes shall be made so that finish work will conform as nearly as practicable to the applicable requirements specified for new manholes, including all necessary concrete work, cutting, and shaping. The connection shall be centered on the manhole. Holes for the new pipe shall be of sufficient diameter to allow packing cement mortar around the entire periphery of the pipe but no larger than 1.5 times the diameter of the pipe. Cutting the manhole shall be done in a manner that will cause the least damage to the walls.

3.5 BUILDING CONNECTIONS

Building connections shall include the lines to and connection with the building waste drainage piping at a point approximately 5 feet outside the building, unless otherwise indicated. Where building drain piping is not installed, the Contractor shall terminate the building connections approximately 5 feet from the site of the building at a point and in a manner designated.

3.6 CLEANOUTS AND OTHER APPURTENANCES

Cleanouts and other appurtenances shall be installed where shown on the drawings or as directed by the Contracting Officer, and shall conform to the detail of the drawings.

-- End of Section --

SECTION TABLE OF CONTENTS

DIVISION 02 - SITE WORK

SECTION 02532A

FORCE MAINS; SEWER

07/98

PART 1 GENERAL

1.1 REFERENCES
1.2 SUBMITTALS
1.3 DELIVERY AND STORAGE

PART 2 PRODUCTS

2.1 PIPE AND FITTINGS
2.1.1 Plastic Pipe
2.1.1.1 PE Pipe
2.1.1.2 Polypropylene Pipe
2.1.1.3 PVC Pipe
2.1.1.4 Oriented Polyvinyl Chloride (PVCO) Plastic Pipe
2.2 JOINTS
2.2.1 PE Piping
2.2.2 Polypropylene Piping
2.2.3 PVC Piping
2.2.4 PVCO Pipe
2.3 VALVES
2.3.1 Gate Valves
2.3.2 Check Valves
2.3.3 Plug Valves
2.3.4 Air Release Valves
2.4 VALVE BOXES
2.5 VALVE VAULTS
2.6 MISCELLANEOUS MATERIALS
2.6.1 Joint Lubricants
2.6.2 Bolts, Nuts and Glands
2.6.3 Joint Compound
2.6.4 Joint Tape
2.6.5 Bond Wire

PART 3 EXECUTION

3.1 INSTALLATION
3.1.1 Adjacent Facilities
3.1.2 Cutting
3.1.3 Laying
3.1.4 Jointing
3.1.4.1 Joints for PE Pipe
3.1.4.2 Joints for Polypropylene Pipe
3.1.4.3 Joints for PVC Pipe
3.1.4.4 Joints for Ductile Iron Pipe
3.1.5 Installation of Valves
3.1.6 Installation of Valve Boxes
3.1.7 Installation of Valve Vaults
3.1.8 Thrust Restraint
3.1.8.1 Thrust Blocks
3.1.8.2 Restrained Joints

3.1.9 Grout
3.1.10 Bonded Joints
3.2 HYDROSTATIC TESTS
3.2.1 Pressure Test
3.2.2 Leakage Test
3.2.3 Retesting

-- End of Section Table of Contents --

SECTION 02532A

FORCE MAINS; SEWER
07/98

PART 1 GENERAL

1.1 REFERENCES

The publications listed below form a part of this specification to the extent referenced. The publications are referred to in the text by basic designation only.

AMERICAN PETROLEUM INSTITUTE (API)

API Spec 6D	(2002) Pipeline Valves

AMERICAN SOCIETY FOR TESTING AND MATERIALS (ASTM)

ASTM C 478	(1997) Precast Reinforced Concrete Manhole Sections
ASTM D 1784	(1999a) Rigid Poly(Vinyl Chloride) (PVC) Compounds and Chlorinated Poly(Vinyl Chloride) (CPVC) Compounds
ASTM D 1785	(1999) Poly(Vinyl Chloride) (PVC) Plastic Pipe, Schedules 40, 80, and 120
ASTM D 2122	(1998) Determining Dimensions of Thermoplastic Pipe and Fittings
ASTM D 2241	(2000) Poly(Vinyl Chloride) (PVC) Pressure-Rated Pipe (SDR Series)
ASTM D 2464	(1999) Threaded Poly(Vinyl Chloride) (PVC) Plastic Pipe Fittings, Schedule 80
ASTM D 2564	(1996a) Solvent Cements for Poly(Vinyl Chloride) (PVC) Plastic Piping Systems
ASTM D 2657	(1997) Heat Fusion Joining Polyolefin Pipe and Fittings
ASTM D 2774	(2001) Underground Installation of Thermoplastic Pressure Piping
ASTM D 3035	(2001) Polyethylene (PE) Plastic Pipe (DR-PR) Based on Controlled Outside Diameter
ASTM D 3139	(1998) Joints for Plastic Pressure Pipes Using Flexible Elastomeric Seals
ASTM D 3308	(2001) PTFE Resin Skived Tape
ASTM D 3350	(2002) Polyethylene Plastics Pipe and Fittings Materials
ASTM D 4101	(2002) Polypropylene Plastic Injection and

	Extrusion Materials
ASTM F 477	(1999) Elastomeric Seals (Gaskets) for Joining Plastic Pipe
ASTM F 1483	(1998) Oriented Poly(Vinyl Chloride), PVCO, Pressure Pipe

ASME INTERNATIONAL (ASME)

ASME B16.1	(1998) Cast Iron Pipe Flanges and Flanged Fittings

AMERICAN WATER WORKS ASSOCIATION (AWWA)

AWWA C111	(2000) Rubber-Gasket Joints for Ductile-Iron Pressure Pipe and Fittings
AWWA C207	(1994) Steel Pipe Flanges for Waterworks Service - Sizes 4 In. Through 144 In. (100 mm through 3,600 mm)
AWWA C500	(1993; C500a) Metal-Seated Gate Valves for Water Supply Service
AWWA C508	(2001) Swing-Check Valves for Waterworks Service, 2 In. (50 mm) Through 24 In. (600 mm) NPS
AWWA C600	(1999) Installation of Ductile-Iron Water Mains and Their Appurtenances
AWWA C900	(1997; C900a) Polyvinyl Chloride (PVC) Pressure Pipe, 4 In. Through 12 In., for Water Distribution
AWWA C909	(1998) Molecularly Oriented Polyvinyl Chloride (PVCO) Pressure Pipe, 4 IN through 12 IN (100 mm through 300 mm), for Water Distribution

DUCTILE IRON PIPE RESEARCH ASSOCIATION (DIPRA)

DIPRA-Restraint Design	(1997) Thrust Restraint Design for Ductile Iron Pipe

MANUFACTURERS STANDARDIZATION SOCIETY OF THE VALVE AND FITTINGS INDUSTRY (MSS)

MSS SP-78	(1998) Cast Iron Plug Valves, Flanged and Threaded Ends

1.2 SUBMITTALS

Government approval is required for submittals with a "G" designation; submittals not having a "G" designation are for information only. When used, a designation following the "G" designation identifies the office that will review the submittal for the Government. The following shall be submitted in accordance with Section 01330 SUBMITTAL PROCEDURES:

SD-06 Test Reports

Hydrostatic Tests; .

Copies of test results.

1.3 DELIVERY AND STORAGE

Pipe, fittings and accessories, and pipe coatings shall not be damaged during delivery, handling, and storage.

PART 2 PRODUCTS

2.1 PIPE AND FITTINGS

Piping for force mains less than 4 inches in diameter shall be polyvinyl chloride (PVC) plastic, polyethylene (PE) plastic or polypropylene plastic. Piping less than 4 inches in diameter inside pump stations shall be galvanized steel. Piping for force mains 4 inches in diameter and larger shall be PVC plastic, or Oriented PVC PE plastic. Piping 4 inches in diameter and larger inside pump stations shall be ductile iron pipe with bolted flange joints. Pipe shall conform to the respective specifications and other requirements specified below.

2.1.1 Plastic Pipe

2.1.1.1 PE Pipe

ASTM D 3350 and ASTM D 3035, minimum pressure rating of 100 psi at 73.4 degrees F.

2.1.1.2 Polypropylene Pipe

ASTM D 2122 and ASTM D 4101.

2.1.1.3 PVC Pipe

a. PVC Pipe and Fittings Less Than 4 inches Diameter: ASTM D 1785, Schedule 80 or ASTM D 2241, SDR 32.5, with screw joints, push-on joints, or solvent weld joints.

b. PVC Pipe and Fittings 4 inches Diameter and Larger: ASTM D 2241, SDR 21 or AWWA C900, Class 150, with push-on joints.

2.1.1.4 Oriented Polyvinyl Chloride (PVCO) Plastic Pipe

Pipe, couplings, and fittings shall be manufactured of material conforming to ASTM D 1784, Class 12454-B. Pipe shall conform to AWWA C909, Class 150, and to ASTM F 1483 and shall have an outside diameter equal to cast iron outside diameter.

2.2 JOINTS

2.2.1 PE Piping

a. Heat Fusion Joints: ASTM D 2657.

b. Flanged Joints: ASME B16.1 or AWWA C207.

c. Mechanical Joints: ASME B16.1.

2.2.2 Polypropylene Piping

Heat Fusion Joints: ASTM D 2657.

2.2.3 PVC Piping

a. Screw Joint Fittings: ASTM D 2464, Schedule 80.

b. Push-On Joint Fittings: ASTM D 3139, with ASTM F 477gaskets.

c. Solvent Cement: ASTM D 2564.

d. Couplings for use with plain end pipe shall have centering rings or stops to ensure the coupling is centered on the joint.

2.2.4 PVCO Pipe

Joints shall conform to ASTM D 3139. Elastomeric gaskets shall conform to ASTM F 477.

2.3 VALVES

2.3.1 Gate Valves

Gate valves 3 inches and larger shall comply with AWWA C500. Valves for buried service shall be non-rising stem (NRS), 2 inch square nut operated with joints applicable to the pipe or installation. Buried valves shall be furnished with extension stems comprising socket, extension stem and operating nut, and shall be of an appropriate length to bring operating nut to within 6 inches of grade. One 4 foot "T" handle valve wrench shall be furnished for each quantity of 6 buried valves. Gate valve operating nuts and handwheels shall have an arrow and the word "OPEN" cast in raised letters to indicate the direction of opening.

2.3.2 Check Valves

Check valves shall permit free flow of sewage forward and provide a positive check against backflow. Check valves shall be designed for a minimum working pressure of 150 psi or as indicated. The body shall be iron. The manufacturer's name, initials, or trademark and also the size of the valve, working pressure, and direction of flow shall be directly cast on the body.

a. Ball Check Valves shall be iron body, shall have flanged ends, and shall be the non-slam type. Flanges shall be the 125 pound type complying with ASME B16.1. Ball shall be stainless steel unless otherwise specified.

b. Swing Check Valves shall comply with AWWA C508 and shall be iron body, bronze mounted, and shall have flanged ends. Flanges shall be the 125 pound type complying with ASME B16.1.

2.3.3 Plug Valves

Cast iron valves shall comply with MSS SP-78. Steel plug valves shall comply with API Spec 6D.

2.3.4 Air Release Valves

Air release valves shall be designed to permit release of air from an empty pipe during filling and shall be capable of discharging accumulated air in the line while the line is in operation and under pressure. Valves shall be attached by means of threaded pipe connections. Valves shall be vented to the atmosphere.

a. Automatic Air Release Valve: Automatic air release valves shall be of the compound lever type capable of withstanding operating pressures of 150 psi. The valves shall have a 1/2 inch outlet. The body and cover of the valve shall be of iron with a stainless steel float. All internal parts shall be stainless steel or bronze. The valve shall be specifically adapted for use with sewage. Each valve shall be complete with hose and blow-off valves to permit backflushing without

dismantling the valve.

2.4 VALVE BOXES

Valve boxes shall be cast iron. Cast iron boxes shall be the extension type with slide type adjustment and with flared base. The minimum thickness of metal shall be 3/16 inch. The box length shall be adaptable, without full extension, to the depth of cover over the pipe at the valve locations. The word "SEWER" shall be cast in the cover.

2.5 VALVE VAULTS

Valve vaults shall be precast concrete units conforming to ASTM C 478.

2.6 MISCELLANEOUS MATERIALS

Miscellaneous materials shall comply with the following requirements:

2.6.1 Joint Lubricants

Joint lubricants shall be as recommended by the pipe manufacturer.

2.6.2 Bolts, Nuts and Glands

AWWA C111.

2.6.3 Joint Compound

A stiff mixture of graphite and oil or inert filler and oil.

2.6.4 Joint Tape

ASTM D 3308.

2.6.5 Bond Wire

Bond wire type RHW or USE, Size 1/0 AWG, neoprene jacketed copper conductor shaped to stand clear of the joint.

PART 3 EXECUTION

3.1 INSTALLATION

Pipe, pipe fittings, and appurtenances shall be installed at the locations indicated. Excavation, trenching, and backfilling shall be as specified in Section 02316a EXCAVATION, TRENCHING AND BACKFILLING FOR UTILITIES SYSTEMS.

3.1.1 Adjacent Facilities

Installation of force mains and inverted siphons near adjacent facilities shall be as specified in Section 02531a SANITARY SEWERS.

3.1.2 Cutting

Pipe shall be cut in a neat manner with mechanical cutters. Wheel cutters shall be used where practicable. Sharp and rough edges shall be ground smooth and loose material removed from the pipe before laying.

3.1.3 Laying

Except where otherwise authorized, pipe shall be laid with bells facing the direction of laying. Before lowering and while suspended, the pipe shall be inspected for defects. Defective material shall be rejected. Pipe shall be

laid in compliance with the following:

a. Polyvinyl Chloride: Manufacturer's instructions.

b. Polyethylene: ASTM D 2774.

c. Polypropylene: ASTM D 2774.

3.1.4 Jointing

3.1.4.1 Joints for PE Pipe

Heat fusion joints shall comply with the manufacturer's instructions concerning equipment, temperature, melt time, heat coat, and joining time. Flanged and mechanical joints shall be made in compliance with the manufacturer's instructions.

3.1.4.2 Joints for Polypropylene Pipe

Heat fusion joints shall comply with the manufacturer's instructions concerning equipment, temperature, melt time, heat coat, and joining time.

3.1.4.3 Joints for PVC Pipe

a. Threaded joints shall be made by wrapping the male threads with joint tape or by applying an approved thread lubricant, then threading the joining members together. The joint shall be tightened with strap wrenches which will not damage the pipe and fittings. The joint shall be tightened no more than 2 threads past hand-tight.

b. Push-on joints: The ends of pipe for push-on joints shall be beveled to facilitate assembly. Pipe shall be marked to indicate when the pipe is fully seated. The gasket shall be lubricated to prevent displacement. The gasket shall remain in proper position in the bell or coupling while the joint is made.

c. Solvent-weld joints shall comply with the manufacturer's instructions.

3.1.4.4 Joints for Ductile Iron Pipe

Installation of mechanical and push-on type joints shall comply with AWWA C600 and the manufacturer's instructions. Installation of flanged joints shall comply with manufacturer's instructions.

3.1.5 Installation of Valves

Prior to installation, valves shall be cleaned of all foreign matter and inspected for damage. Valves shall be fully opened and closed to ensure that all parts are properly operating. Valves shall be installed with the stem in the vertical position.

3.1.6 Installation of Valve Boxes

Valve boxes shall be installed over each outside gate valve, unless otherwise indicated. Valve boxes shall be centered over the valve. Fill shall be carefully tamped around each valve box to a distance of 4 feet on all sides or to undisturbed trench face, if less than 4 feet.

3.1.7 Installation of Valve Vaults

Valve vaults shall be installed as indicated.

3.1.8 Thrust Restraint

Plugs, caps, tees and bends deflecting 11-1/4 degrees or more, either vertically or horizontally, shall be provided with thrust restraint. Valves shall be securely anchored or shall be provided with thrust restraints to prevent movement. Thrust restraints shall be either thrust blocks or, for ductile-iron pipes, restrained joints.

3.1.8.1 Thrust Blocks

Thrust blocking shall be concrete of a mix not leaner than: 1 cement, 2-1/2 sand, 5 gravel; and having a compressive strength of not less than 2000 psi after 28 days. Blocking shall be placed between solid ground and the fitting to be anchored. Unless otherwise indicated or directed, the base and thrust bearing sides of thrust blocks shall be poured directly against undisturbed earth. The sides of thrust blocks not subject to thrust may be poured against forms. The area of bearing shall be as shown or as directed. Blocking shall be placed so that the fitting joints will be accessible for repair. Steel rods and clamps, protected by galvanizing or by coating with bituminous paint, shall be used to anchor vertical down bends into gravity thrust blocks.

3.1.8.2 Restrained Joints

For ductile iron pipe, restrained joints shall be designed by the Contractor or the pipe manufacturer in accordance with DIPRA-Restraint Design.

3.1.9 Grout

Grout for exterior joint protection on concrete pipes shall be a mix of 1 part portland cement, 2 parts sand, and of sufficient liquid consistency to flow into the joint recess beneath the diaper. Grout for interior joint protection shall be a mix of 1 part portland cement and 1 part sand. A polyurethane foam loop, impregnated with portland cement, may be substituted for grout for exterior joints.

3.1.10 Bonded Joints

Where indicated, a metallic bond shall be provided at each joint, including joints made with flexible couplings or rubber gaskets, of ferrous-metallic piping to effect continuous conductivity. The bond shall be of the thermal-weld type.

3.2 HYDROSTATIC TESTS

The pipeline shall be subjected to both a pressure test and a leakage test. The method proposed for disposal of waste water from hydrostatic tests shall be approved by the Contracting Officer. Testing shall be the responsibility of the Contractor. Testing shall be performed by an approved independent testing laboratory or by the Contractor subject to approval. The test may be witnessed by the Contracting Officer. The Contracting Officer shall be notified at least 7 days in advance of equipment tests. The final test report shall be delivered to the Contracting Officer within 30 days of the test.

3.2.1 Pressure Test

After the pipe has been installed, joints completed, thrust blocks have been in place for at least five days, and the trench has been partially backfilled, leaving the joints exposed for examination, the pipe shall be filled with water to expel all air. The pipeline shall be subjected to a test pressure of 100 psi or 150 percent of the working pressure, whichever is greater, for a period of at least one hour. Each valve shall be opened and closed several times during the test. The exposed pipe, joints, fitting, and valves shall be examined for leaks. Visible leaks shall be stopped or the defective pipe, fitting, joints, or valve shall be replaced.

3.2.2 Leakage Test

The leakage test may be conducted subsequent to or concurrently with the pressure test. The amount of water permitted as leakage for the line shall be placed in a sealed container attached to the supply side of the test pump. No other source of supply will be permitted to be applied to the pump or line under test. The water shall be pumped into the line by the test pump as required to maintain the specified test pressure as described for pressure test for a 2 hour period. Exhaustion of the supply or the inability to maintain the required pressure will be considered test failure. PE pipe can experience diametric expansion and pressure elongation during initial testing. The manufacturer shall be consulted prior to testing for special testing considerations. Allowable leakage shall be determined by the following I-P formula:

$L = NDP/K$ Where:

L = Allowable leakage in gallons per hour.

N = Number of joints in length of pipeline tested.

D = Nominal diameter of the pipe in inches.

P = Square root of the test pressure in psig.

K = 7400 for pipe materials.

At the conclusion of the test, the amount of water remaining in the container shall be measured and the results recorded in the test report.

3.2.3 Retesting

If any deficiencies are revealed during any test, such deficiencies shall be corrected and the tests shall be reconducted until the results of the tests are within specified allowances, without additional cost to the Government.

-- End of Section --

SECTION TABLE OF CONTENTS

DIVISION 02 - SITE WORK

SECTION 02547

BITUMINOUS PAVEMENT WITH BASE COURSE

01/98

PART 1 GENERAL

1.1 REFERENCES
1.2 DESCRIPTION OF WORK
1.3 DESCRIPTION OF TERMS
1.4 APPLICABLE SPECIFICATIONS
1.5 SUBMITTALS
1.6 SAFETY PRECAUTIONS
1.7 EQUIPMENT, TOOLS, AND MACHINES
1.7.1 Bituminous Distributors
1.7.2 Single-Pass, Surface-Treatment Machines
1.7.3 Heating Equipment for Storage Tanks
1.7.4 Power Rollers
1.7.5 Mechanical Spreaders
1.7.6 Brooms and Blowers
1.7.7 Scales
1.7.8 Weighhouse
1.8 SAMPLING AND TESTING
1.8.1 Wear Test
1.8.2 Soundness Test
1.9 WEATHER LIMITATIONS

PART 2 PRODUCTS

2.1 MATERIALS
2.1.1 Aggregate Base Course
2.1.2 Primer Coat
2.1.3 Tack Coat
2.1.4 Bituminous Plant Mix Pavement
2.1.5 Asphalt Cement for Plant Mix
2.1.6 Bituminous Concrete Surface Course
2.1.7 Bituminous Materials

PART 3 EXECUTION

3.1 ESTABLISHMENT OF JOB-MIX FORMULA, INCLUDING SAMPLING AND TESTING
3.1.1 Sampling and Testing

-- End of Section Table of Contents --

SECTION 02547

BITUMINOUS PAVEMENT WITH BASE COURSE

01/98

PART 1 GENERAL

1.1 REFERENCES

The publications listed below form a part of this specification to the extent referenced. The publications are referred to in the text by basic designation only.

AMERICAN SOCIETY FOR TESTING AND MATERIALS (ASTM)

ASTM C 88	(1990) Soundness of Aggregates by Use of Sodium Sulfate or Magnesium Sulfate
ASTM C 131	(1989) Resistance to Degradation of Small-Size Coarse Aggregate by Abrasion and Impact in the Los Angeles Machine
ASTM D 75	(1987; R 1992) Sampling Aggregates
ASTM D 140	(1993) Sampling Bituminous Materials

NORTH CAROLINA DEPARTMENT OF TRANSPORTATION (NCDOT)

NCDOT	(2000) NCDOT Standard Specifications for Roads and Structures

1.2 DESCRIPTION OF WORK

The work covered by this section consists of the construction of a bituminous pavement consisting of a base course, bituminous prime and tack coats and a bituminous surface course and/or courses on a properly prepared subgrade and in conformity with the lines, grades, thicknesses and typical section and/or sections shown on the plans. The construction of the bituminous pavement shall conform to the requirements of the "North Carolina Department of Transportation Standard Specifications for Roads and Structures," 2000 Edition, except for the modifications or revisions specified herein.

1.3 DESCRIPTION OF TERMS

Wherever in the North Carolina Department of Transportation (NCDOT) Standard Specifications for Roads and Structures, hereinafter referred to as the "Standard Specifications," the following terms are used, the intent shall be as follows:

"State" ---------- U.S. Government

"Commission" ---------- Corps of Engineers, Party of the First Part

"Engineer" ---------- Contracting Officer, Corps of Engineers

1.4 APPLICABLE SPECIFICATIONS

The following sections of NCDOT Standard Specifications form a part of this

section of the specifications, except as hereinafter modified:

Section	Section Title
101	Definition of Terms
520	Aggregate Base Course, (Type - A Aggregate)
600	Prime Coat
605	Tack Coat
610	Bituminous Plant Mix Pavements - General
620	Asphalt Cement for Plant Mix
645	Bituminous Concrete Surface Course, Type I-1
1020	Bituminous Materials

All sections referenced in the designated sections above shall also form a part of these Technical Provisions.

1.5 SUBMITTALS

Government approval is required for submittals with a "G" designation; submittals not having a "G" designation are for information only. When used, a designation following the "G" designation identifies the office that will review the submittal for the Government. The following shall be submitted in accordance with Section 01330 SUBMITTAL PROCEDURES:

SD-06 Test Reports

Tests;

Copies of pavement job mix formula and test data results, within 24 hours after completion of each test.

1.6 SAFETY PRECAUTIONS

No smoking, or open flames shall be permitted within 25 feet of heating, distributing, or transferring operations of bituminous materials other than bituminous emulsions.

1.7 EQUIPMENT, TOOLS, AND MACHINES

1.7.1 Bituminous Distributors

The distributors shall have pneumatic tires of such width and number that the load produced on the base surface does not exceed 650 pounds per inch of tire width. Distributors shall be designed and equipped to distribute bituminous material uniformly at even heat on various widths of surface at readily determined and controlled rates ranging from 0.05 to 2.00 gallons per square yard, with a pressure range of 25 to 75 psi. The allowable variation from any specified rate shall not exceed 5 percent. Distributor equipment shall include a separate power unit for the bitumen pump, full-circulation spray bars, tachometer, pressure gauges, volume-measuring devices, a thermometer for reading the temperature of tank contents, and a hose attachment suitable for applying bituminous material to areas not accessible with distributor spray bar. The distributor shall be equipped for circulation and agitation of bituminous material during the heating process.

1.7.2 Single-Pass, Surface-Treatment Machines

The machines shall be capable of spraying bituminous material and spreading aggregate in one pass. Bituminous spraying equipment shall conform to the requirements given above for a bituminous distributor. The machine shall be capable of spreading aggregates at controlled amounts per square yard as specified. In addition, the single-pass, surface-treatment machine shall be

capable of placing a surface treatment adjacent to an existing surface treatment, forming a joint of the same thickness and uniformity as other portions of the surface treatment. Ridges or blank spaces will not be permitted. Joints in the second application shall be formed at least 1 foot from those formed in the first application.

1.7.3 Heating Equipment for Storage Tanks

The equipment shall consist of coils and equipment for producing steam or hot oil and be designed to prevent the introduction of steam or hot oil into the material. An armored thermometer with a range of 100 to 400 degrees F shall be affixed to the tank so the temperature of the bituminous material may be determined at all times.

1.7.4 Power Rollers

Power rollers shall be steel-wheeled or pneumatic-tired type, conforming to the following requirements:

a. Steel-wheeled rollers shall have at least one steel drum and weigh a minimum of 5 tons. Steel wheels of the rollers shall be equipped with adjustable scrapers.

b. Pneumatic-tired rollers shall be self-propelled and have wheels mounted on two axles in such manner that the rear tires will not follow in the tracks of the forward group. Tires shall be uniformly inflated to not less than 60 psi nor more than 80 psi pressure. The pneumatic-tired rollers shall be equipped with boxes or platforms for ballast loading and shall be loaded so that the tire print width of each wheel is not less than the clear distance between tire prints.

1.7.5 Mechanical Spreaders

The spreaders shall be adjustable and capable of spreading aggregate at controlled amounts per square yard, as specified.

1.7.6 Brooms and Blowers

The machines shall be of the power type, capable of cleaning surfaces to be treated.

1.7.7 Scales

The scales shall be standard truck scales of the beam type equipped with a weight-recording device. The scales shall be sufficient in size and capacity to accommodate the trucks used in hauling aggregates. The scales shall be tested and approved by an inspector of the State Inspection Bureau charged with scale inspection within the state in which the project is located. If an official of the inspection bureau is not available, the scales shall be tested in accordance with state specifications by the Contractor in the presence of the Contracting Officer. The Contractor shall have the necessary number of standard weights on hand at all times for testing the scales.

1.7.8 Weighhouse

The house shall be weatherproof and shall be constructed in a manner to afford adequate protection for the indicating and recording devices of the scales.

1.8 SAMPLING AND TESTING

The sampling and testing shall be the responsibility of the Contractor. Sampling and testing shall be performed by an approved commercial testing laboratory, or by the Contractor, subject to approval. Sampling shall be in

accordance with ASTM D 75 for aggregates and ASTM D 140 for bituminous material, unless otherwise directed. Tests shall be performed in sufficient number to insure that materials meet specified requirements.

1.8.1 Wear Test

The wear test shall be performed in accordance with ASTM C 131 to ensure that aggregates have a percentage of wear not exceeding 40 percent after 500 revolutions. One test shall be performed for every 500 tons of aggregates in stockpiles or at the source.

1.8.2 Soundness Test

The soundness test shall be performed as specified by ASTM C 88 to ensure that aggregates have a weight loss not greater than 15 percent when subjected to five cycles of the magnesium sulfate test. One test shall be performed for every 500 tons of aggregates in stockpiles or at the source.

1.9 WEATHER LIMITATIONS

Bituminous surface treatment shall be applied only when the existing surface or base course is dry. Bituminous surface treatment shall not be applied when either the atmospheric temperature, in the shade, is below 50 degrees F or the pavement surface to be treated is below 70 degrees F unless otherwise directed.

PART 2 PRODUCTS

2.1 MATERIALS

Mineral aggregate and bituminous material of the following types, gradations, grades, and consistencies that meet the requirements of stripping, wear, and soundness tests as specified by NCDOT and in paragraph SAMPLING AND TESTING shall be used.

2.1.1 Aggregate Base Course

Aggregate base course, Type A, per NCDOT Sec 520.

2.1.2 Primer Coat

Primer coat per NCDOT Sec 600.

2.1.3 Tack Coat

Tack coat per NCDOT Sec 605.

2.1.4 Bituminous Plant Mix Pavement

Bituminous plant mix pavement per NCDOT Sec 610.

2.1.5 Asphalt Cement for Plant Mix

Asphalt cement for plant mix per NCDOT Sec 620.

2.1.6 Bituminous Concrete Surface Course

Bituminous concrete surface course, Type I-1, per NCDOT Sec 645.

2.1.7 Bituminous Materials

Bituminous materials per NCDOT Section 1020.

PART 3 EXECUTION

3.1 ESTABLISHMENT OF JOB-MIX FORMULA, INCLUDING SAMPLING AND TESTING

The bituminous plant mix surface course shall be applied in accordance with the Standard Specifications using asphaltic concrete "I-1."

3.1.1 Sampling and Testing

The Contractor shall perform the necessary thickness and density tests of the compacted base course and the compacted bituminous surface course as directed at no additional cost to the Government.

-- End of Section --

SECTION TABLE OF CONTENTS

DIVISION 02 - SITE WORK

SECTION 02556A

GAS DISTRIBUTION SYSTEM

08/01

PART 1 GENERAL

1.1 REFERENCES
1.2 SUBMITTALS
1.3 GENERAL REQUIREMENTS
1.3.1 Jointing Polyethylene Piping
1.3.2 Standard Products
1.3.3 Verification of Dimensions
1.3.4 Handling

PART 2 PRODUCTS

2.1 PIPE, FITTINGS, AND ASSOCIATED MATERIALS
2.1.1 Steel Pipe
2.1.2 Small Fittings
2.1.3 Fittings, 2 Inches and Larger
2.1.4 Steel Forged Branch Connections
2.1.5 Flange Gaskets
2.1.6 Pipe Threads
2.1.7 Polyethylene Pipe, Tubing, Fittings and Joints
2.1.8 Sealants for Steel Pipe Threaded Joints
2.1.8.1 Sealing Compound
2.1.8.2 Tape
2.1.9 Identification
2.1.10 Insulating Joint Materials
2.1.10.1 Threaded Joints
2.1.10.2 Flanged Joints
2.1.10.3 Dielectric Waterways and Flanges
2.2 VALVES
2.2.1 Steel Valves
2.2.2 Steel Valve Operators
2.3 PRESSURE REGULATORS
2.3.1 Service Line Regulators
2.4 PROTECTIVE COVERING MATERIALS

PART 3 EXECUTION

3.1 EXCAVATION AND BACKFILLING
3.2 GAS MAINS
3.3 SERVICE LINES CONNECTION
3.4 WORKMANSHIP AND DEFECTS
3.5 PROTECTIVE COVERING
3.5.1 Protective Covering for Underground Steel Pipe
3.5.1.1 Thermoplastic Resin Coating System
3.5.1.2 Inspection of Pipe Coatings
3.5.2 Protective Covering for Aboveground Piping Systems
3.5.2.1 Ferrous Surfaces
3.5.2.2 Nonferrous Surfaces
3.5.3 Protective Covering for Piping in Valve Boxes and Manholes
3.6 INSTALLATION

3.6.1 Installing Pipe Underground
3.6.2 Installing Pipe Aboveground
3.7 PIPE JOINTS
3.7.1 Threaded Steel Joints
3.7.2 Welded Steel Joints
3.7.3 Polyethylene Pipe Jointing Procedures
3.7.4 Connections Between Metallic and Plastic Piping
3.8 VALVE BOXES
3.9 PRESSURE REGULATOR INSTALLATION
3.9.1 Service Line Regulators
3.10 CONNECTIONS TO EXISTING LINES
3.10.1 Connection to Government Owned/Operated Gas Lines
3.11 CATHODIC PROTECTION
3.12 TESTS
3.12.1 Destructive Tests of Plastic Pipe Joints
3.12.2 Pressure and Leak Tests

-- End of Section Table of Contents --

SECTION 02556A

GAS DISTRIBUTION SYSTEM
08/01

PART 1 GENERAL

1.1 REFERENCES

The publications listed below form a part of this specification to the extent referenced. The publications are referred to in the text by basic designation only.

AMERICAN GAS ASSOCIATION (AGA)

AGA Manual	(1994; addenda/correction Jan 1996) A.G.A. Plastic Pipe Manual for Gas Service

AMERICAN PETROLEUM INSTITUTE (API)

API Spec 5L	(2000) Line Pipe
API Spec 6D	(1994; Supple 1 Jun 1996; Supple 2 Dec 1997) Pipeline Valves (Gate, Plug, Ball, and Check Valves)

AMERICAN SOCIETY FOR TESTING AND MATERIALS (ASTM)

ASTM A 53/A 53M	(1999b) Pipe, Steel, Black and Hot-Dipped, Zinc-Coated, Welded and Seamless
ASTM A 181/A 181M	(2000) Carbon Steel Forgings, for General-Purpose Piping
ASTM D 2513	(2000) Thermoplastic Gas Pressure Pipe, Tubing, and Fittings
ASTM D 2683	(1998) Socket-Type Polyethylene Fittings for Outside Diameter-Controlled Polyethylene Pipe and Tubing
ASTM D 3261	(1997) Butt Heat Fusion Polyethylene (PE) Plastic Fittings for Polyethylene (PE) Plastic Pipe and Tubing
ASTM D 3308	(1997) PTFE Resin-Skived Tape
ASTM D 3350	(1999) Polyethylene Plastics Pipe and Fittings Materials

ASME INTERNATIONAL (ASME)

ASME B1.20.1	(1983; R 1992) Pipe Threads, General Purpose (Inch)
ASME B16.5	(1996; B16.5a) Pipe Flanges and Flanged Fittings NPS 1/2 thru NPS 24

ASME B16.9	(1993) Factory-Made Wrought Steel Buttwelding Fittings
ASME B16.11	(1996) Forged Fittings, Socket-Welding and Threaded
ASME B16.21	(1992) Nonmetallic Flat Gaskets for Pipe Flanges
ASME B16.34	(1997) Valves - Flanged, Threaded, and Welding End
ASME B31.8	(1995) Gas Transmission and Distribution Piping Systems

U.S. NATIONAL ARCHIVES AND RECORDS ADMINISTRATION (NARA)

49 CFR 192	Transportation of Natural and Other Gas by Pipeline: Minimum Federal Safety Standards

U.S. GENERAL SERVICES ADMINISTRATION (GSA)

CID A-A-2962	(Rev A) Enamel, Alkyd (Metric)

MANUFACTURERS STANDARDIZATION SOCIETY OF THE VALVE AND FITTINGS INDUSTRY (MSS)

MSS SP-25	(1998) Standard Marking System for Valves, Fittings, Flanges and Unions

NACE INTERNATIONAL (NACE)

NACE RP0185	(1996) Extruded, Polyolefin Resin Coating Systems with Soft Adhesives for Underground or Submerged Pipe
NACE RP0274	(1998) High Voltage Electrical Inspection of Pipeline Coatings Prior to Installation

THE SOCIETY FOR PROTECTIVE COATINGS (SSPC)

SSPC Paint 25	(1991) Red Iron Oxide, Zinc Oxide, Raw Linseed Oil and Alkyd Primer (Without Lead and Chromate Pigments)
SSPC SP 1	(1982) Solvent Cleaning
SSPC SP 3	(1995) Power Tool Cleaning
SSPC SP 6/NACE 3	(1994) Commercial Blast Cleaning
SSPC SP 7/NACE 4	(1994) Brush-Off Blast Cleaning

UNDERWRITERS LABORATORIES (UL)

UL Gas&Oil Dir	(1999) Gas and Oil Equipment Directory

1.2 SUBMITTALS

Government approval is required for submittals with a "G" designation; submittals not having a "G" designation are for information only. When used, a designation following the "G" designation identifies the office that will review

the submittal for the Government. The following shall be submitted in accordance with Section 01330 SUBMITTAL PROCEDURES:

SD-02 Shop Drawings

Pipe, Fittings, and Associated Materials;

Drawings shall contain complete schematic and piping diagrams and any other details required to demonstrate that the system has been coordinated and will properly function as a unit. Drawings shall show proposed layout and anchorage of the system and appurtenances, and equipment relationship to other parts of the work including clearances for maintenance and operation.

SD-03 Product Data

Materials and Equipment; G-RE

A complete list of equipment and materials, including manufacturer's descriptive and technical literature, performance charts and curves, catalog cuts, and installation instructions, including, but not limited to the following:

a. Dielectric Waterways and Flange Kits.

b. Pressure Reducing Valves.

c. Regulators.

Spare Parts Data; G-RE

Spare parts lists for each different item of material and equipment specified, after approval of the detail drawings and not later than 2-months prior to the date of beneficial occupancy. The data shall include a complete list of parts and supplies, with current unit prices and source of supply.

Connections to Existing Lines; G-RE

Notification of the Contractor's schedule for making connections to existing gas lines, at least 10 days in advance.

Welding Steel Piping; G-RE

A copy of qualified welding procedures along with a list of names and identification symbols of performance qualified welders and welding operators.

Jointing Polyethylene Piping; G-RE

A copy of qualified jointing procedures, training procedures, qualifications of trainer, and training test results for joiners and inspectors.

Connection Plan; G-RE

A copy of procedures for gas line tie in, hot taps, purging, and plugging as applicable in accordance with ASME B31.8.

SD-06 Test Reports

Pressure and Leak Tests; G-RE

Data from all pressure tests of the distribution system.

SD-07 Certificates

Utility Work; G-RE

Certification from the Operating Agency/Utility Company that work for which the Utility is responsible has been completed.

Training;

A copy of each inspector's and jointer's training certificate with respective test results.

SD-10 Operation and Maintenance Data

Gas Distribution System; G-RE

Six copies, in booklet form and indexed, of site specific natural gas operation and maintenance manual for each gas distribution system including system operation, system maintenance, equipment operation, and equipment maintenance manuals described below. If operation and maintenance manuals are provided in a common volume, they shall be clearly differentiated and separately indexed.

The System Operation Manual shall include but not be limited to the following:

a. Maps showing piping layout and locations of all system valves and gas line markers.

b. Step-by-step procedures required for system startup, operation, and shutdown. System components and equipment shall be indexed to the gas maps.

c. Isolation procedures and valve operations to shut down or isolate each section of the system. Valves and other system components shall be indexed to the gas maps.

d. Descriptions of Site Specific Standard Operation Procedures including permanent and temporary pipe repair procedures, system restart and test procedures for placing repaired lines back in service, and procedures for abandoning gas piping and system components.

e. Descriptions of Emergency Procedures including: isolation procedures including required valve operations with valve locations indexed to gas map, recommended emergency equipment, checklist for major emergencies and procedures for connecting emergency gas supply.

The Equipment Operation Manual shall include, but not be limited to, detail drawings, equipment data, and manufacturer supplied operation manuals for all equipment, valves and system components.

The System Maintenance Manuals shall include, but not be limited to:

a. Maintenance check list for entire gas distribution system.

b. Descriptions of site specific standard maintenance procedures.

c. Maintenance procedures for installed cathodic protection systems.

d. Piping layout, equipment layout, and control diagrams of the

systems as installed.

e. Identification of pipe materials and manufacturer by location, pipe repair procedures, and jointing procedures at transitions to other piping materials or piping from different manufacturer.

The Equipment Maintenance Manuals shall include but not be limited to the following:

a. Identification of valves and other equipment by materials, manufacturer, vendor identification and location.

b. Maintenance procedures and recommended maintenance tool kits for all valves and equipment.

c. Recommended repair methods, either field repair, factory repair, or whole-item replacement for each valve component or piece of equipment or component item.

d. Routine maintenance procedures, possible breakdowns and repairs, and troubleshooting guide.

1.3 GENERAL REQUIREMENTS

1.3.1 Jointing Polyethylene Piping

Piping shall be joined by performance qualified joiners using qualified procedures in accordance with AGA Manual. Manufacturer's prequalified joining procedures shall be used. Joints shall be inspected by an inspector qualified in the joining procedures being used and in accordance with AGA Manual. Joiners and inspectors shall be qualified at the jobsite by a person who has been trained and certified by the manufacturer of the pipe, to train and qualify joiners and inspectors in each joining procedure to be used on the job. Training shall include use of equipment, explanation of the procedure, and successfully making joints which pass tests specified in AGA Manual. The Contracting Officer shall be notified at least 24 hours in advance of the date to qualify joiners and inspectors.

1.3.2 Standard Products

Materials and equipment shall be the standard products of a manufacturer regularly engaged in the manufacture of the products and shall essentially duplicate items that have been in satisfactory use for at least 2 years prior to bid opening. Asbestos or products containing asbestos shall not be used. Equipment shall be supported by a service organization that is, in the opinion of the Contracting Officer, reasonably convenient to the site. Valves, flanges, and fittings shall be marked in accordance with MSS SP-25.

1.3.3 Verification of Dimensions

The Contractor shall become familiar with all details of the work, verify all dimensions in the field, and shall advise the Contracting Officer of any discrepancy before performing the work.

1.3.4 Handling

Pipe and components shall be handled carefully to ensure a sound, undamaged condition. Particular care shall be taken not to damage pipe coating. No pipe or material of any kind shall be placed inside another pipe or fitting after the coating has been applied, except as specified in paragraph INSTALLATION. Plastic pipe shall be handled in conformance with AGA Manual.

PART 2 PRODUCTS

2.1 PIPE, FITTINGS, AND ASSOCIATED MATERIALS

2.1.1 Steel Pipe

Steel pipe shall conform to ASTM A 53/A 53M, Grade A or B, Type E or S, Schedule 40; or API Spec 5L seamless or electric resistance welded, Schedule 40, black steel pipe as specified in ASME B31.8. Furnace buttwelded pipe may be used in sizes 1-1/2 inches and smaller.

2.1.2 Small Fittings

Fittings 1-1/2 inches and smaller shall conform to ASME B16.11.

2.1.3 Fittings, 2 Inches and Larger

Pipe flanges and flanged fittings including bolts, nuts, and bolt patterns shall be in accordance with ASME B16.5, Class 125. Buttweld fittings shall be in accordance with ASME B16.9. Weld neck flanges shall be used.

2.1.4 Steel Forged Branch Connections

Connections shall conform to ASTM A 181/A 181M, Class 60, carbon steel.

2.1.5 Flange Gaskets

Gaskets shall be non-asbestos compressed material in accordance with ASME B16.21, 1/16 inch minimum thickness, full face or self-centering flat ring type. The gaskets shall contain aramid fibers bonded with nitrile butadiene rubber (NBR), or glass fibers bonded with polytetrafluoroethylene, suitable for maximum 600 degrees F service and meeting applicable requirements of ASME B31.8.

2.1.6 Pipe Threads

Pipe threads shall conform to ASME B1.20.1.

2.1.7 Polyethylene Pipe, Tubing, Fittings and Joints

Polyethylene pipe, tubing, fittings and joints shall conform to ASTM D 3350 and ASTM D 2513, pipe designations PE 2406 and PE 3408, rated SDR 13.5 or less, as specified in ASME B31.8. Pipe sections shall be marked as required by ASTM D 2513. Butt fittings shall conform to ASTM D 3261 and socket fittings shall conform to ASTM D 2683. Fittings shall match the service rating of the pipe. Minimum wall thickness shall be .097.

2.1.8 Sealants for Steel Pipe Threaded Joints

2.1.8.1 Sealing Compound

Joint sealing compound shall be as listed in UL Gas&Oil Dir, Class 20 or less.

2.1.8.2 Tape

Polytetrafluoroethylene tape shall conform to ASTM D 3308.

2.1.9 Identification

Pipe flow markings and metal tags for each valve, meter, and regulator shall be provided as required by the Contracting Officer.

2.1.10 Insulating Joint Materials

Insulating joint materials shall be provided between flanged or threaded

metallic pipe systems where shown to isolate galvanic or electrolytic action.

2.1.10.1 Threaded Joints

Joints for threaded pipe shall be steel body nut type, dielectric waterways with insulating gaskets.

2.1.10.2 Flanged Joints

Joints for flanged pipe shall consist of full face sandwich-type flange insulating gasket of the dielectric type, insulating sleeves for flange bolts and insulating washers for flange nuts.

2.1.10.3 Dielectric Waterways and Flanges

Dielectric waterways shall have temperature and pressure rating equal to or greater than that specified for the connecting piping. Waterways shall have metal connections on both ends suited to match connecting piping. Dielectric waterways shall be internally lined with an insulator specifically designed to prevent current flow between dissimilar metals. Dielectric flanges shall meet the performance requirements described herein for dielectric waterways.

2.2 VALVES

Valves shall be suitable for shutoff or isolation service and shall conform to the following:

2.2.1 Steel Valves

Steel valves 1-1/2 inches and smaller installed underground shall conform to ASME B16.34, carbon steel, socket weld ends, with square wrench operator adaptor. Steel valves 1-1/2 inches and smaller installed aboveground shall conform to ASME B16.34, carbon steel, socket weld or threaded ends with handwheel or wrench operator. Steel valves 2 inches and larger installed underground shall conform to API Spec 6D, carbon steel, buttweld ends, Class 125 with square wrench operator adaptor. Steel valves 2 inches and larger installed aboveground shall conform to API Spec 6D, carbon steel, buttweld or flanged ends, Class 125 with handwheel or wrench operator.

2.2.2 Steel Valve Operators

Valves 8 inches and larger shall be provided with worm or spur gear operators, totally enclosed, grease packed, and sealed. The operators shall have Open and Closed stops and position indicators. Locking feature shall be provided where indicated. Wherever the lubricant connections are not conveniently accessible, suitable extensions for the application of lubricant shall be provided. Valves shall be provided with lubricant compatible with gas service.

2.3 PRESSURE REGULATORS

Regulators shall have ferrous bodies, shall provide backflow and vacuum protection, and shall be designed to meet the pressure, load and other service conditions.

2.3.1 Service Line Regulators

Pressure regulators for individual service lines shall have ferrous bodies. Regulator shall be capable of reducing distribution line pressure to pressures required for users. Regulators shall be provided where gas will be distributed at pressures in excess of 10 inches of water column. Pressure relief shall be set at a lower pressure than would cause unsafe operation of any connected user. Regulator shall have single port with orifice diameter no greater than that recommended by the manufacturer for the maximum gas pressure at the regulator

inlet. Regulator valve vent shall be of resilient materials designed to withstand flow conditions when pressed against the valve port. Regulator shall be capable of regulating downstream pressure within limits of accuracy and shall be capable of limiting the buildup of pressure under no-flow conditions to 50 percent or less of the discharge pressure maintained under flow conditions. Regulator shall have a self contained service regulator. Regulator pipe connections shall not exceed 2 inchsize.

2.4 PROTECTIVE COVERING MATERIALS

Continuously extruded polyethylene and adhesive coating system materials shall conform to NACE RP0185, Type A.

PART 3 EXECUTION

3.1 EXCAVATION AND BACKFILLING

Earthwork shall be as specified in Section 02316a EXCAVATION, TRENCHING, AND BACKFILLING FOR UTILITIES SYSTEMS.

3.2 GAS MAINS

Pipe for gas mains shall be polyethylene. Polyethylene mains shall not be installed aboveground.

3.3 SERVICE LINES CONNECTION

Service lines shall be constructed of materials specified for gas mains and shall extend from a gas main to and including the point of delivery within 5 feet of the building. The point of delivery is the service regulator. The service lines shall be connected to the gas mains as indicated . Where indicated, service line shall be provided with an isolation valve of the same size as the service line. The service lines shall be as short and as straight as practicable between the point of delivery and the gas main and shall not be bent or curved laterally unless necessary to avoid obstructions or otherwise permitted. Service lines shall be laid with as few joints as practicable using standard lengths of pipe. Shorter lengths shall be used only for closures. Polyethylene service lines shall not be installed aboveground except as permitted in ASME B31.8.

3.4 WORKMANSHIP AND DEFECTS

Pipe, tubing, and fittings shall be clear and free of cutting burrs and defects in structure or threading and shall be thoroughly brushed and blown free of chips and scale. Defective pipe, tubing, or fittings shall be replaced and shall not be repaired.

3.5 PROTECTIVE COVERING

3.5.1 Protective Covering for Underground Steel Pipe

Except as otherwise specified, protective coverings shall be applied mechanically in a factory or field plant especially equipped for the purpose. Valves and fittings that cannot be coated and wrapped mechanically shall have the protective covering applied by hand, preferably at the plant that applies the covering to the pipe. Joints shall be coated and wrapped by hand. Hand coating and wrapping shall be done in a manner and with materials that will produce a covering equal in thickness to that of the covering applied mechanically.

3.5.1.1 Thermoplastic Resin Coating System

The coating system shall conform to NACE RP0185, Type A. The exterior of the

pipe shall be cleaned to a commercial grade blast cleaning finish in accordance with SSPC SP 6/NACE 3. Adhesive compound shall be applied to the pipe. Immediately after the adhesive is applied, a seamless tube of polyethylene shall be extruded over the adhesive to produce a bonded seamless coating. The nominal thickness of the pipe coating system shall be 10 mils (plus or minus 10 percent) of adhesive and 40 mils (plus or minus 10 percent) of polyethylene for pipes up to 16 inches in diameter. For pipes 18 inches and larger in diameter, the pipe coating system thickness shall be 10 mils (plus or minus 10 percent) adhesive and 60 mils (plus or minus 10 percent) polyethylene. Joint coating and field repair material shall be applied as recommended by the coating manufacturer and shall be one of the following:

a. Heat shrinkable polyethylene sleeves.

b. Polyvinyl chloride pressure-sensitive adhesive tape.

c. High density polyethylene/bituminous rubber compound tape.

The coating system shall be inspected for holes, voids, cracks, and other damage during installation.

3.5.1.2 Inspection of Pipe Coatings

Any damage to the protective covering during transit and handling shall be repaired before installation. After field coating and wrapping has been applied, the entire pipe shall be inspected by an electric holiday detector with impressed current set at a value in accordance with NACE RP0274 using a full-ring, spring-type coil electrode. The holiday detector shall be equipped with a bell, buzzer, or other type of audible signal which sounds when a holiday is detected. All holidays in the protective covering shall be repaired immediately upon detection. The Contracting Officer reserves the right to inspect and determine the suitability of the detector. Labor, materials, and equipment necessary for conducting the inspection shall be furnished by the Contractor.

3.5.2 Protective Covering for Aboveground Piping Systems

Finish painting shall conform to the applicable paragraphs of Section 09900 PAINTS AND COATINGS and as follows:

3.5.2.1 Ferrous Surfaces

Shop primed surfaces shall be touched up with ferrous metal primer same type paint as the shop primer. Surfaces that have not been shop primed shall be solvent-cleaned in accordance with SSPC SP 1. Surfaces that contain loose rust, loose mill scale, and other foreign substances shall be mechanically cleaned by power wire brushing in accordance with SSPC SP 3 or brush-off blast cleaned in accordance with SSPC SP 7/NACE 4 and primed with ferrous metal primer in accordance with SSPC Paint 25. Primed surfaces shall be finished with two coats of exterior alkyd paint conforming to CID A-A-2962 Type I, Class A , Grade B.

3.5.2.2 Nonferrous Surfaces

Nonferrous surfaces shall not be painted.

3.5.3 Protective Covering for Piping in Valve Boxes and Manholes

Piping in valve boxes or manholes shall receive protective coating as specified for underground steel pipe.

3.6 INSTALLATION

Gas distribution system and equipment shall be installed in conformance with the

manufacturer's recommendations and applicable sections of ASME B31.8, AGA Manual and 49 CFR 192. Pipe shall be cut without damaging the pipe. Unless otherwise authorized, cutting shall be done by an approved type of mechanical cutter. Wheel cutters shall be used where practicable. On steel pipe 6 inches and larger, an approved gas-cutting-and-beveling machine may be used. Cutting of plastic pipe shall be in accordance with AGA Manual. Valve installation in plastic pipe shall be designed to protect the plastic pipe against excessive torsional or shearing loads when the valve is operated and from other stresses which may be exerted through the valve or valve box.

3.6.1 Installing Pipe Underground

Joints in steel pipe shall be welded except as otherwise permitted for installation of valves. Mains shall have 24 inch minimum cover; service lines shall have 18 inch minimum cover; and both mains and service lines shall be placed on firmly compacted select material for the full length. Where indicated, the main shall be encased, bridged, or designed to withstand any anticipated external loads as specified in ASME B31.8. The encasement material shall be standard weight black steel pipe with a protective coating as specified. The pipe shall be separated from the casing by insulating spacers and sealed at the ends with casing bushings. Trench shall be excavated below pipe grade, bedded with bank sand, and compacted to provide full-length bearing. Laying the pipe on blocks to produce uniform grade will not be permitted. The pipe shall be clean inside before it is lowered into the trench and shall be kept free of water, soil, and all other foreign matter that might damage or obstruct the operation of the valves, regulators, meters, or other equipment. When work is not in progress, open ends of pipe or fittings shall be securely closed by expandable plugs or other suitable means. Minor changes in line or gradient of pipe that can be accomplished through the natural flexibility of the pipe material without producing permanent deformation and without overstressing joints may be made when approved. Changes in line or gradient that exceed the limitations specified shall be made with fittings. When cathodic protection is furnished, electrically insulated joints or flanges shall be provided. When polyethylene piping is installed underground, foil backed magnetic tape shall be placed above the pipe to permit locating with a magnetic detector. After laying of pipe and testing, trench shall be backfilled in accordance with Section 02316a EXCAVATION, TRENCHING, AND BACKFILLING FOR UTILITY SYSTEMS.

3.6.2 Installing Pipe Aboveground

Aboveground piping shall be protected against dirt and other foreign matter as specified for underground piping. Joints in steel pipe shall be welded; however, joints in pipe 1-1/2 inches in diameter and smaller may be threaded; joints may also be threaded to accommodate the installation of valves. Flanges shall be of the weld neck type to match wall thickness of pipe.

3.7 PIPE JOINTS

Pipe joints shall be designed and installed to effectively sustain the longitudinal pullout forces caused by the contraction of piping or superimposed loads.

3.7.1 Threaded Steel Joints

Threaded joints in steel pipe shall have tapered threads evenly cut and shall be made with UL approved graphite joint sealing compound for gas service or polytetrafluoroethylene tape applied to the male threads only. Caulking of threaded joints to stop or prevent leaks will not be permitted.

3.7.2 Welded Steel Joints

Gas pipe weldments shall be as indicated. Changes in direction of piping shall

be made with welding fittings only; mitering or notching pipe to form elbows and tees or other similar type construction will not be permitted. Branch connection may be made with either welding tees or forged branch outlet fittings. Branch outlet fittings shall be forged, flared for improvement of flow where attached to the run, and reinforced against external strains. Beveling, alignment, heat treatment, and inspection of weld shall conform to ASME B31.8. Weld defects shall be removed and repairs made to the weld, or the weld joints shall be entirely removed and rewelded. After filler metal has been removed from its original package, it shall be protected or stored so that its characteristics or welding properties are not affected adversely. Electrodes that have been wetted or have lost any of their coating shall not be used.

3.7.3 Polyethylene Pipe Jointing Procedures

Jointing procedures shall conform to AGA Manual. Indiscriminate heat fusion joining of plastic pipe or fittings made from different polyethylene resins by classification or by manufacturer shall be avoided if other alternative joining procedures are available. If heat fusion joining of dissimilar polyethylenes is required, special procedures are required. The method of heat fusion joining dissimilar polyethylene resins shall be tested in accordance with paragraph TESTS, subparagraph Destructive Tests of Plastic Pipe Joints.

3.7.4 Connections Between Metallic and Plastic Piping

Connections shall be made only outside, underground, and with approved transition fittings.

3.8 VALVE BOXES

Valve boxes of cast iron not less than 3/16 inch thick shall be installed at each underground valve except where concrete or other type of housing is indicated. Valve boxes shall be provided with locking covers that require a special wrench for removal. Wrench shall be furnished for each box. The word "gas" shall be cast in the box cover. When the valve is located in a roadway, the valve box shall be protected by a suitable concrete slab at least 3 square feet. When in a sidewalk, the top of the box shall be in a concrete slab 2 feet square and set flush with the sidewalk. Boxes shall be adjustable extension type with screw or slide-type adjustments. Valve boxes shall be separately supported, not resting on the pipe, so that no traffic loads can be transmitted to the pipe. Valves shall only be located in valve boxes or inside of buildings.

3.9 PRESSURE REGULATOR INSTALLATION

3.9.1 Service Line Regulators

A shutoff valve, and service regulator shall be installed on the service line outside the building, 18 inches above the ground on the riser. An insulating joint shall be installed on the inlet side of the meter set assembly and service regulator and shall be constructed to prevent flow of electrical current. A 3/8 inch tapped fitting equipped with a plug shall be provided on both sides of the service regulator for installation of pressure gauges for adjusting the regulator. All service regulator vents and relief vents shall terminate in the outside air in rain and insect resistant fittings. The open end of the vent shall be located where gas can escape freely into the atmosphere, away from any openings into the building and above areas subject to flooding.

3.10 CONNECTIONS TO EXISTING LINES

Connections between new work and existing gas lines, where required, shall be made in accordance with ASME B31.8, using proper fittings to suit the actual conditions. When connections are made by tapping into a gas main, the connecting fittings shall be the same size as the pipe being connected.

3.10.1 Connection to Government Owned/Operated Gas Lines

The Contractor shall provide connections to the existing gas lines in accordance with approved procedures. Deactivation of any portion of the existing system shall only be done at the valve location as directed by the Contracting Officier. Reactivation of any existing gas lines will only be done by the Government. The Contractor's Connection and Abandonment Plan shall be submitted and approved prior to making any connections to existing gas lines. This plan shall include the Operating Agency's required procedures which may be obtained from Contracting Officier.. The Contractor shall notify the Contracting Officer, in writing, 10 days before connections to existing lines are to be made.

a. If facilities are abandoned in place, they shall be physically disconnected from the piping system. The open ends of all abandoned facilities shall be purged, capped, plugged or otherwise effectively sealed. Abandonment shall not be completed until it has been determined that the volume of gas or liquid hydrocarbons contained within the abandoned section poses no potential hazard. Air or inert gas may be used for purging, or the facility may be filled with water or other inert material. If air is used for purging, the Contractor shall ensure that a combustible mixture is not present after purging.

b. Service lines abandoned from the active mains shall be disconnected as close to the main as practicable.

c. All valves left in the abandoned segment shall be closed.

d. All abovegrade valves, risers, and vault and valve box covers shall be removed. Vault and valve box voids shall be filled with suitable compacted backfill material.

3.11 CATHODIC PROTECTION

Cathodic protection shall be provided for all metallic gas piping installed underground and shall be installed as specified in Section 13110A CATHODIC PROTECTION SYSTEM (SACRIFICIAL ANODE) .

3.12 TESTS

3.12.1 Destructive Tests of Plastic Pipe Joints

Each day, prior to making polyethylene heat fusion joints, a joint of each size and type to be installed that day shall be made by each person performing joining of plastic pipe that day and destructively tested. At least 3 longitudinal straps shall be cut from each joint. Each strap shall be visually examined, shall not contain voids or discontinuities on the cut surfaces of the joint area, and shall be deformed by bending, torque, or impact, and if failure occurs, it must not initiate in the joint area. If a joint fails the visual or deformation test, the qualified joiner who made that joint shall not make further field joints in plastic pipe on this job until that person has been retrained and requalified. The results of the destructive tests shall be recorded to include the date and time of the tests, size and type of the joints, ambient conditions, fusion iron temperature and names of inspectors and joiners.

3.12.2 Pressure and Leak Tests

The system of gas mains and service lines shall be tested after construction and before being placed in service using air as the test medium. The normal operating pressure for the system is 25. The test pressure is 40. Prior to testing the system, the interior shall be blown out, cleaned and cleared of all foreign materials. All meters, regulators, and controls shall be removed before blowing out and cleaning and reinstalled after clearing of all foreign materials. Testing of gas mains and service lines shall be done with due regard

for the safety of employees and the public during the test. Persons not working on the test operations shall be kept out of the testing area while testing is proceeding. The test shall be made on the system as a whole or on sections that can be isolated. Joints in sections shall be tested prior to backfilling when trenches must be backfilled before the completion of other pipeline sections. The test shall continue for at least 24 hours from the time of the initial readings to the final readings of pressure and temperature. The initial test readings of the instrument shall not be made for at least 1 hour after the pipe has been subjected to the full test pressure, and neither the initial nor final readings shall be made at times of rapid changes in atmospheric conditions. The temperatures shall be representative of the actual trench conditions. There shall be no indication of reduction of pressure during the test after corrections have been made for changes in atmospheric conditions in conformity with the relationship T(1)P(2)=T(2)P(1), in which T and P denote absolute temperature and pressure, respectively, and the numbers denote initial and final readings. During the test, the entire system shall be completely isolated from all compressors and other sources of air pressure. Each joint shall be tested by means of soap and water or an equivalent nonflammable solution prior to backfilling or concealing any work. The testing instruments shall be approved by the Contracting Officer. All labor, materials and equipment for conducting the tests shall be furnished by the Contractor and shall be subject to inspection at all times during the tests. The Contractor shall maintain safety precautions for air pressure testing at all times during the tests.

-- End of Section --

SECTION TABLE OF CONTENTS

DIVISION 02 - SITE WORK

SECTION 02630A

STORM-DRAINAGE SYSTEM

03/00

PART 1 GENERAL

1.1 REFERENCES
1.2 SUBMITTALS
1.3 DELIVERY, STORAGE, AND HANDLING
1.3.1 Delivery and Storage
1.3.2 Handling

PART 2 PRODUCTS

2.1 PIPE FOR STORM DRAINS
2.1.1 Concrete Pipe
2.1.2 PVC Pipe
2.1.2.1 Type PSM PVC Pipe
2.1.3 PE Pipe
2.1.3.1 Corrugated PE Pipe
2.2 MISCELLANEOUS MATERIALS
2.2.1 Concrete
2.2.2 Mortar
2.2.3 Precast Reinforced Concrete Manholes
2.2.4 Frame and Cover for Gratings
2.2.5 Joints
2.2.5.1 Flexible Watertight Joints
2.2.5.2 PVC Plastic Pipes
2.2.5.3 Corrugated PE Plastic Pipe
2.3 STEEL LADDER
2.4 DOWNSPOUT BOOTS
2.5 RESILIENT CONNECTORS

PART 3 EXECUTION

3.1 EXCAVATION FOR PIPE CULVERTS, STORM DRAINS, AND DRAINAGE STRUCTURES
3.2 BEDDING
3.2.1 Concrete Pipe Requirements
3.2.2 Plastic Pipe
3.3 PLACING PIPE
3.3.1 Concrete and PVC Pipe
3.3.2 Corrugated PE Pipe
3.4 JOINTING
3.4.1 Concrete Pipe
3.4.1.1 Flexible Watertight Joints
3.5 DRAINAGE STRUCTURES
3.5.1 Manholes and Inlets
3.6 BACKFILLING
3.6.1 Backfilling Pipe in Trenches
3.6.2 Movement of Construction Machinery

-- End of Section Table of Contents --

SECTION 02630A

STORM-DRAINAGE SYSTEM
03/00

PART 1 GENERAL

1.1 REFERENCES

The publications listed below form a part of this specification to the extent referenced. The publications are referred to in the text by basic designation only.

AMERICAN ASSOCIATION OF STATE HIGHWAY AND TRANSPORTATION OFFICIALS (AASHTO)

AASHTO M 198	(1998) Joints for Circular Concrete Sewer and Culvert Pipe Using Flexible Watertight Gaskets
AASHTO M 294	(1998) Corrugated Polyethylene Pipe, 300- to 1200- mm Diameter

AMERICAN SOCIETY FOR TESTING AND MATERIALS (ASTM)

ASTM A 48	(1994a) Gray Iron Castings
ASTM A 123/A 123M	(1997ael) Zinc (Hot-Dip Galvanized) Coatings on Iron and Steel Products
ASTM A 536	(1999el) Ductile Iron Castings
ASTM B 26/B 26M	(1998) Aluminum-Alloy Sand Castings
ASTM C 76	(1999) Reinforced Concrete Culvert, Storm Drain, and Sewer Pipe
ASTM C 270	(1997) Mortar for Unit Masonry
ASTM C 425	(1998b) Compression Joints for Vitrified Clay Pipe and Fittings
ASTM C 443	(1998) Joints for Circular Concrete Sewer and Culvert Pipe, Using Rubber Gaskets
ASTM C 478	(1997) Precast Reinforced Concrete Manhole Sections
ASTM C 923	(1998) Resilient Connectors Between Reinforced Concrete Manhole Structures, Pipes and Materials
ASTM D 1751	(1999) Preformed Expansion Joint Filler for Concrete Paving and Structural Construction (Nonextruding and Resilient Bituminous Types)
ASTM D 1752	(1984; R 1996el) Preformed Sponge Rubber and Cork Expansion Joint Fillers for Concrete Paving and Structural Construction
ASTM D 1784	(1999a) Rigid Poly(Vinyl Chloride) (PVC)

	Compounds and Chlorinated Poly(Vinyl Chloride) (CPVC) Compounds
ASTM D 2321	(1989; R 1995) Underground Installation of Thermoplastic Pipe for Sewers and Other Gravity-Flow Applications
ASTM D 3034	(1998) Type PSM Poly(Vinyl Chloride) (PVC) Sewer Pipe and Fittings
ASTM D 3350	(1998a) Polyethylene Plastics Pipe and Fittings Materials
ASTM F 477	(1999) Elastomeric Seals (Gaskets) for Joining Plastic Pipe

1.2 SUBMITTALS

Government approval is required for submittals with a "G" designation; submittals not having a "G" designation are for information only. When used, a designation following the "G" designation identifies the office that will review the submittal for the Government. The following shall be submitted in accordance with Section 01330 SUBMITTAL PROCEDURES:

SD-03 Product Data

Placing Pipe;

Printed copies of the manufacturer's recommendations for installation procedures of the material being placed, prior to installation.

SD-07 Certificates

Resin Certification;

Certified copies of test reports demonstrating conformance to applicable pipe specifications, before pipe is installed.

Frame and Cover for Gratings;

Certification on the ability of frame and cover or gratings to carry the imposed live load.

1.3 DELIVERY, STORAGE, AND HANDLING

1.3.1 Delivery and Storage

Materials delivered to site shall be inspected for damage, unloaded, and stored with a minimum of handling. Materials shall not be stored directly on the ground. The inside of pipes and fittings shall be kept free of dirt and debris. Before, during, and after installation, plastic pipe and fittings shall be protected from any environment that would result in damage or deterioration to the material. The Contractor shall have a copy of the manufacturer's instructions available at the construction site at all times and shall follow these instructions unless directed otherwise by the Contracting Officer. Solvents, solvent compounds, lubricants, elastomeric gaskets, and any similar materials required to install plastic pipe shall be stored in accordance with the manufacturer's recommendations and shall be discarded if the storage period exceeds the recommended shelf life. Solvents in use shall be discarded when the recommended pot life is exceeded.

1.3.2 Handling

Materials shall be handled in a manner that ensures delivery to the trench in sound, undamaged condition. Pipe shall be carried to the trench, not dragged.

PART 2 PRODUCTS

2.1 PIPE FOR STORM DRAINS

Pipe for culverts and storm drains shall be of the sizes indicated and shall conform to the requirements specified.

2.1.1 Concrete Pipe

ASTM C 76, Class IV.

2.1.2 PVC Pipe

The pipe manufacturer's resin certification, indicating the cell classification of PVC used to manufacture the pipe, shall be submitted prior to installation of the pipe.

2.1.2.1 Type PSM PVC Pipe

ASTM D 3034, Type PSM, maximum SDR 35, produced from PVC certified by the compounder as meeting the requirements of ASTM D 1784, minimum cell class 12454-B.

2.1.3 PE Pipe

The pipe manufacturer's resin certification indicating the cell classification of PE used to manufacture the pipe shall be submitted prior to installation of the pipe. The minimum cell classification for polyethylene plastic shall apply to each of the seven primary properties of the cell classification limits in accordance with ASTM D 3350.

2.1.3.1 Corrugated PE Pipe

AASHTO M 294, Type S, for pipes 12 to 48 inches produced from PE certified by the resin producer as meeting the requirements of ASTM D 3350, minimum cell class in accordance with AASHTO M 294. Pipe walls shall have the following properties:

Nominal Size (in.)	Minimum Wall Area (square in/ft)	Minimum Moment of Inertia of Wall Section (in to the 4th/in)
12	1.50	0.024
15	1.91	0.053
18	2.34	0.062
24	3.14	0.116
30	3.92	0.163
36	4.50	0.222
42	4.69	0.543
48	5.15	0.543

2.2 MISCELLANEOUS MATERIALS

2.2.1 Concrete

Unless otherwise specified, concrete and reinforced concrete shall conform to the requirements for 4000 psi concrete under Section 03300 CAST-IN-PLACE STRUCTURAL CONCRETE. The concrete covering over steel reinforcing shall not be

less than 1 inch thick for covers and not less than 1-1/2 inches thick for walls and flooring. Concrete covering deposited directly against the ground shall have a thickness of at least 3 inches between steel and ground. Expansion-joint filler material shall conform to ASTM D 1751, or ASTM D 1752, or shall be resin-impregnated fiberboard conforming to the physical requirements of ASTM D 1752.

2.2.2 Mortar

Mortar for pipe joints, connections to other drainage structures, and brick or block construction shall conform to ASTM C 270, Type M, except that the maximum placement time shall be 1 hour. The quantity of water in the mixture shall be sufficient to produce a stiff workable mortar but in no case shall exceed 5 gallons of water per sack of cement. Water shall be clean and free of harmful acids, alkalies, and organic impurities. The mortar shall be used within 30 minutes after the ingredients are mixed with water. The inside of the joint shall be wiped clean and finished smooth. The mortar head on the outside shall be protected from air and sun with a proper covering until satisfactorily cured.

2.2.3 Precast Reinforced Concrete Manholes

Precast reinforced concrete manholes shall conform to ASTM C 478. Joints between precast concrete risers and tops shall be full-bedded in cement mortar and shall be smoothed to a uniform surface on both interior and exterior of the structure.

2.2.4 Frame and Cover for Gratings

Frame and cover for gratings shall be cast gray iron, ASTM A 48, Class 35B; cast ductile iron, ASTM A 536, Grade 65-45-12; or cast aluminum, ASTM B 26/B 26M, Alloy 356.OT6. Weight, shape, size, and waterway openings for grates and curb inlets shall be as indicated on the plans.

2.2.5 Joints

2.2.5.1 Flexible Watertight Joints

a. Materials: Flexible watertight joints shall be made with plastic or rubber-type gaskets for concrete pipe and with factory-fabricated resilient materials for clay pipe. The design of joints and the physical requirements for plastic gaskets shall conform to AASHTO M 198, and rubber-type gaskets shall conform to ASTM C 443.
Factory-fabricated resilient joint materials shall conform to ASTM C 425. Gaskets shall have not more than one factory-fabricated splice, except that two factory-fabricated splices of the rubber-type gasket are permitted if the nominal diameter of the pipe being gasketed exceeds 54 inches.

Alternate types of watertight joint may be furnished, if specifically approved.

2.2.5.2 PVC Plastic Pipes

Joints shall be solvent cement or elastomeric gasket type in accordance with the specification for the pipe and as recommended by the pipe manufacturer.

2.2.5.3 Corrugated PE Plastic Pipe

Water tight joints shall be made using a PVC or PE coupling and rubber gaskets as recommended by the pipe manufacturer. Rubber gaskets shall conform to ASTM F 477.

2.3 STEEL LADDER

Steel ladder shall be provided where the depth of the manhole exceeds 12 feet. These ladders shall be not less than 16 inches in width, with 3/4 inch diameter rungs spaced 12 inches apart. The two stringers shall be a minimum 3/8 inch thick and 2-1/2 inches wide. Ladders and inserts shall be galvanized after fabrication in conformance with ASTM A 123/A 123M.

2.4 DOWNSPOUT BOOTS

Boots used to connect exterior downspouts to the storm-drainage system shall be of gray cast iron conforming to ASTM A 48, Class 30B or 35B. Shape and size shall be as indicated.

2.5 RESILIENT CONNECTORS

Flexible, watertight connectors used for connecting pipe to manholes and inlets shall conform to ASTM C 923.

PART 3 EXECUTION

3.1 EXCAVATION FOR PIPE CULVERTS, STORM DRAINS, AND DRAINAGE STRUCTURES

Excavation of trenches, and for appurtenances and backfilling for culverts and storm drains, shall be in accordance with the applicable portions of Section 02316a EXCAVATION, TRENCHING, AND BACKFILLING FOR UTILITIES SYSTEMS.

3.2 BEDDING

The bedding surface for the pipe shall provide a firm foundation of uniform density throughout the entire length of the pipe.

3.2.1 Concrete Pipe Requirements

When no bedding class is specified or detailed on the drawings, concrete pipe shall be bedded in a soil foundation accurately shaped and rounded to conform to the lowest one-fourth of the outside portion of circular pipe or to the lower curved portion of pipe arch for the entire length of the pipe or pipe arch. When necessary, the bedding shall be tamped. Bell holes and depressions for joints shall be not more than the length, depth, and width required for properly making the particular type of joint.

3.2.2 Plastic Pipe

Bedding for PVC and PE pipe shall meet the requirements of ASTM D 2321. Bedding, haunching, and initial backfill shall be either Class IB or II material.

3.3 PLACING PIPE

Each pipe shall be thoroughly examined before being laid; defective or damaged pipe shall not be used. Plastic pipe shall be protected from exposure to direct sunlight prior to laying, if necessary to maintain adequate pipe stiffness and meet installation deflection requirements. Pipelines shall be laid to the grades and alignment indicated. Proper facilities shall be provided for lowering sections of pipe into trenches. Lifting lugs in vertically elongated metal pipe shall be placed in the same vertical plane as the major axis of the pipe. Pipe shall not be laid in water, and pipe shall not be laid when trench conditions or weather are unsuitable for such work. Diversion of drainage or dewatering of trenches during construction shall be provided as necessary. Deflection of installed flexible pipe shall not exceed the following limits:

TYPE OF PIPE	MAXIMUM ALLOWABLE DEFLECTION (%)
Plastic	7.5

Not less than 30 days after the completion of backfilling, the Government may perform a deflection test on the entire length of installed flexible pipe using a mandrel or other suitable device. Installed flexible pipe showing deflections greater than those indicated above shall be retested by a run from the opposite direction. If the retest also fails, the suspect pipe shall be replaced at no cost to the Government.

3.3.1 Concrete and PVC Pipe

Laying shall proceed upgrade with spigot ends of bell-and-spigot pipe and tongue ends of tongue-and-groove pipe pointing in the direction of the flow.

3.3.2 Corrugated PE Pipe

Laying shall be with the separate sections joined firmly on a bed shaped to line and grade and shall follow manufacturer's recommendations.

3.4 JOINTING

3.4.1 Concrete Pipe

3.4.1.1 Flexible Watertight Joints

Gaskets and jointing materials shall be as recommended by the particular manufacturer in regard to use of lubricants, cements, adhesives, and other special installation requirements. Surfaces to receive lubricants, cements, or adhesives shall be clean and dry. Gaskets and jointing materials shall be affixed to the pipe not more than 24 hours prior to the installation of the pipe, and shall be protected from the sun, blowing dust, and other deleterious agents at all times. Gaskets and jointing materials shall be inspected before installing the pipe; any loose or improperly affixed gaskets and jointing materials shall be removed and replaced. The pipe shall be aligned with the previously installed pipe, and the joint pushed home. If, while the joint is being made the gasket becomes visibly dislocated the pipe shall be removed and the joint remade.

3.5 DRAINAGE STRUCTURES

3.5.1 Manholes and Inlets

Construction shall be of reinforced concrete or precast reinforced concrete,; complete with frames and covers or gratings. Pipe connections to concrete manholes and inlets shall be made with flexible, watertight connectors.

3.6 BACKFILLING

3.6.1 Backfilling Pipe in Trenches

After the pipe has been properly bedded, trenches shall be backfilled in accordance with the applicable portions of Section 02316a EXCAVATION, TRENCHING, AND BACKFILLING FOR UTILITIES SYSTEMS.

3.6.2 Movement of Construction Machinery

When compacting by rolling or operating heavy equipment parallel with the pipe, displacement of or injury to the pipe shall be avoided. Movement of construction machinery over a culvert or storm drain at any stage of construction shall be at the Contractor's risk. Any damaged pipe shall be repaired or replaced.

-- End of Section --

SECTION TABLE OF CONTENTS

DIVISION 02 - SITE WORK

SECTION 02721

RIGID BASE COURSE

03/97

PART 1 GENERAL

1.1 REFERENCES
1.2 SUBMITTALS
1.3 DEGREE OF COMPACTION
1.4 SAMPLING AND TESTING
1.4.1 Sampling
1.4.2 Tests
1.4.2.1 Sieve Analysis
1.4.2.2 Liquid Limit and Plasticity Index
1.4.2.3 Moisture-Density Determinations
1.4.2.4 Density Tests
1.4.2.5 Wear Test
1.4.3 Testing Frequency
1.4.3.1 Initial Tests
1.4.3.2 In-Place Tests
1.4.4 Approval of Material
1.5 WEATHER LIMITATIONS
1.6 EQUIPMENT

PART 2 PRODUCTS

2.1 MATERIALS
2.1.1 Rigid Base Course

PART 3 EXECUTION

3.1 STOCKPILING MATERIAL
3.2 PREPARATION OF UNDERLYING MATERIAL
3.3 GRADE CONTROL
3.4 MIXING AND PLACING MATERIALS
3.5 LAYER THICKNESS
3.6 COMPACTION
3.7 EDGES
3.8 SMOOTHNESS TEST
3.9 THICKNESS CONTROL
3.10 MAINTENANCE

-- End of Section Table of Contents --

SECTION 02721

RIGID BASE COURSE
03/97

PART 1 GENERAL

1.1 REFERENCES

The publications listed below form a part of this specification to the extent referenced. The publications are referred to in the text by basic designation only.

AMERICAN ASSOCIATION OF STATE HIGHWAY AND TRANSPORTATION OFFICIALS (AASHTO)

AASHTO T 180	(1997) Moisture-Density Relations of Soils Using a 4.54-kg (10-lb) Rammer and an 457-mm (18-in) Drop

AMERICAN SOCIETY FOR TESTING AND MATERIALS (ASTM)

ASTM C 117	(1995) Materials Finer Than 75 micrometer (No. 200) Sieve in Mineral Aggregates by Washing
ASTM C 131	(1996) Resistance to Degradation of Small-Size Coarse Aggregate by Abrasion and Impact in the Los Angeles Machine
ASTM C 136	(1996) Sieve Analysis of Fine and Coarse Aggregates
ASTM D 75	(1987; R 1997) Sampling Aggregates
ASTM D 422	(1963; R 1998) Particle-Size Analysis of Soils
ASTM D 1556	(1990; R 1996el) Density and Unit Weight of Soil in Place by the Sand-Cone Method
ASTM D 1557	(1998) Laboratory Compaction Characteristics of Soil Using Modified Effort (56,000 ft-lbf/cu. ft. (2,700 kN-m/cu.m.))
ASTM D 2167	(1994) Density and Unit Weight of Soil in Place by the Rubber Balloon Method
ASTM D 2922	(1996el) Density of Soil and Soil-Aggregate in Place by Nuclear Methods (Shallow Depth)
ASTM D 3017	(1988; R 1996el) Water Content of Soil and Rock in Place by Nuclear Methods (Shallow Depth)
ASTM D 4318	(1998) Liquid Limit, Plastic Limit, and Plasticity Index of Soils
ASTM E 11	(1995) Wire-Cloth Sieves for Testing Purposes

1.2 SUBMITTALS

Government approval is required for submittals with a "G" designation; submittals not having a "G" designation are for information only. When used, a designation following the "G" designation identifies the office that will review the submittal for the Government. The following shall be submitted in accordance with Section 01330 SUBMITTAL PROCEDURES:

SD-03 Product Data

Equipment; G-RE

List of proposed equipment to be used in performance of construction work, including descriptive data.

SD-06 Test Reports

Sampling and Testing; G-RE

Copies of initial and in-place test results.

1.3 DEGREE OF COMPACTION

Degree of compaction is a percentage of the maximum density obtained by the test procedure presented in either ASTM D 1557 or AASHTO T 180, Method D. The maximum density shall be determined in accordance with ASTM D 1557 if the material gradation contains less than 30 percent retained on the 19 mm sieve or AASHTO T 180 if the material gradation contains more than 30 percent on the 19 mm sieve. In this specification, degree of compaction shall be a percentage of laboratory maximum density.

1.4 SAMPLING AND TESTING

Sampling and testing shall be the responsibility of the Contractor. Sampling and testing shall be performed by an approved testing laboratory in accordance with Section 01451 CONTRACTOR QUALITY CONTROL. Tests shall be performed at the specified frequency. No work requiring testing will be permitted until the testing laboratory has been inspected and approved. The materials shall be tested to establish compliance with the specified requirements.

1.4.1 Sampling

Samples for laboratory testing shall be taken in conformance with ASTM D 75. When deemed necessary, the sampling will be observed by the Contracting Officer.

1.4.2 Tests

1.4.2.1 Sieve Analysis

Sieve analysis shall be made in conformance with ASTM C 117 and ASTM C 136 and ASTM D 422. Sieves shall conform to ASTM E 11.

1.4.2.2 Liquid Limit and Plasticity Index

Liquid limit and plasticity index shall be determined in accordance with ASTM D 4318.

1.4.2.3 Moisture-Density Determinations

The maximum density and optimum moisture shall be determined in accordance with ASTM D 1557 if the material gradation contains less than 30 percent retained on the 19 mm sieve or AASHTO T 180, Method D if the material gradation contains more than 30 percent retained on the 19 mm sieve.

1.4.2.4 Density Tests

Density shall be field measured in accordance with either ASTM D 1556, ASTM D 2167, or ASTM D 2922. If density is field measured in accordance with ASTM D 1556, the base plate, as shown in the drawing shall be used. The calibration curves shall be checked and adjusted, if necessary, using only the sand cone method as described in paragraph Calibration, of the ASTM publication. Tests performed in accordance with ASTM D 2922 result in a wet unit weight of soil and, when using this method, ASTM D 3017 shall be used to determine the moisture content of the soil. The calibration curves furnished with the moisture gauges shall also be checked along with density calibration checks as described in ASTM D 3017. The calibration checks of both the density and moisture gauges shall be made by the prepared containers of material method, as described in paragraph Calibration, in ASTM D 2922, on each different type of material to be tested at the beginning of a job and at intervals as directed.

1.4.2.5 Wear Test

Wear tests shall be made on rigid base course material in conformance with ASTM C 131.

1.4.3 Testing Frequency

1.4.3.1 Initial Tests

One of each of the following tests shall be performed on the proposed material prior to commencing construction to demonstrate that the proposed material meets all specified requirements prior to installation.

a. Sieve Analysis including 0.02 mm size material
b. Liquid limit and plasticity index
c. Moisture-density relationship
d. Wear

1.4.3.2 In-Place Tests

One of each of the following tests shall be performed on samples taken from the placed and compacted rigid base course. Samples shall be taken for each 1000 square yards of each layer of material placed in each area.

a. Sieve Analysis including 0.02 mm size material
b. Field Density
c. Moisture liquid limit and plasticity index

1.4.4 Approval of Material

The source of the material shall be selected 30 days prior to the time the material will be required in the work. Approval of the materials will be based on tests for gradation, liquid limit, and plasticity index performed on samples taken from the completed and compacted rigid base course.

1.5 WEATHER LIMITATIONS

Construction shall be done when the atmospheric temperature is above 35 degrees F. When the temperature falls below 35 degrees F, the Contractor shall protect all completed areas by approved methods against detrimental effects of freezing. Completed areas damaged by freezing, rainfall, or other weather conditions shall be corrected to meet specified requirements.

1.6 EQUIPMENT

All plant, equipment, and tools used in the performance of the work will be subject to approval before the work is started and shall be maintained in satisfactory working condition at all times. The equipment shall be adequate

and shall have the capability of producing the required compaction, meeting grade controls, thickness control, and smoothness requirements as set forth herein.

PART 2 PRODUCTS

2.1 MATERIALS

2.1.1 Rigid Base Course

Aggregates shall consist of crushed stone, crushed gravel, sand, or other sound, durable, approved materials processed and blended or naturally combined. Aggregates shall be durable and sound, free from lumps and balls of clay, organic matter, objectionable coatings, and other foreign material. Material retained on the No. 4 sieve shall have a percentage of wear not to exceed 50 percent after 500 revolutions when tested as specified in ASTM C 131. Aggregate shall be reasonably uniform in density and quality. Aggregates shall have a maximum size of 50 inch and shall be within the limits specified as follows:

Maximum Allowable Percentage by Weight
Passing Square-Mesh Sieve

Sieve Designation	No. 1	No.2	No. 3	No.4
No. 10	50	80	--	85
No. 200	15	15	15	15

Particles having diameters less than 0.0008 inches shall not be in excess of 6 percent by weight of the total sample tested as determined in accordance with ASTM D 422. The portion of any blended component and of the completed course passing the No. 40 sieve shall be either nonplastic or shall have a liquid limit not greater than 25 and a plasticity index not greater than 5.

PART 3 EXECUTION

3.1 STOCKPILING MATERIAL

Prior to stockpiling of material, storage sites shall be cleared and leveled by the Contractor. All materials, including approved material available from excavation and grading, shall be stockpiled in the manner and at the locations designated. Aggregates shall be stockpiled on the cleared and leveled areas designated by the Contracting Officer so as to prevent segregation. Materials obtained from different sources shall be stockpiled separately.

3.2 PREPARATION OF UNDERLYING MATERIAL

Prior to constructing the rigid base course, the underlying subgrade shall be cleaned of all foreign substances. The surface of the underlying subgrade shall meet specified compaction and surface tolerances. Ruts, or soft yielding spots, in the underlying subgrade, areas having inadequate compaction, and deviations of the surface from the specified requirements, shall be corrected by loosening and removing soft or unsatisfactory material and by adding approved material, reshaping to line and grade, and recompacting to specified density requirements. The finished underlying course shall not be disturbed by traffic or other operations and shall be maintained by the Contractor in a satisfactory condition until the rigid base course is placed.

3.3 GRADE CONTROL

The finished and completed rigid base course shall conform to the lines, grades, and cross sections shown. The lines, grades, and cross sections shown shall be

maintained by means of line and grade stakes placed by the Contractor at the work site.

3.4 MIXING AND PLACING MATERIALS

The materials shall be mixed and placed to obtain uniformity of the rigid base material at the water content specified. The Contractor shall make such adjustments in mixing or placing procedures or in equipment as may be directed to obtain the true grades, to minimize segregation and degradation, to reduce or accelerate loss or increase of water, and to insure a satisfactory rigid base course.

3.5 LAYER THICKNESS

The compacted thickness of the completed course shall be as indicated. When a compacted layer of 6 inches is specified, the material may be placed in a single layer; when a compacted thickness of more than 6 inches is required, no layer shall exceed 6 inches nor be less than 3 inches when compacted.

3.6 COMPACTION

Each layer of the rigid base course shall be compacted as specified with approved compaction equipment. Water content shall be maintained during the compaction procedure to within plus or minus 1 percent of optimum water content, as determined from laboratory tests, as specified in paragraph SAMPLING AND TESTING. In all places not accessible to the rollers, the mixture shall be compacted with hand-operated power tampers. Compaction shall continue until each layer is compacted through the full depth to at least 100 percent of laboratory maximum density. The Contractor shall make such adjustments in compacting or finishing procedures as may be directed to obtain true grades, to minimize segregation and degradation, to reduce or increase water content, and to ensure a satisfactory rigid base course. Any materials that are found to be unsatisfactory shall be removed and replaced with satisfactory material or reworked, as directed, to meet the requirements of this specification.

3.7 EDGES

Approved material shall be placed along the edges of the rigid base course in such quantity as will compact to the thickness of the course being constructed. When the course is being constructed in two or more layers, at least a 1 foot width of the shoulder shall be rolled and compacted simultaneously with the rolling and compacting of each layer of the rigid base course, as directed.

3.8 SMOOTHNESS TEST

The surface of each layer shall not show deviations in excess of 3/8 inch when tested with a 12 footstraightedge applied parallel with and at right angles to the centerline of the area to be paved. Deviations exceeding this amount shall be corrected by removing material, replacing with new material, or reworking existing material and compacting, as directed.

3.9 THICKNESS CONTROL

The completed thickness of the rigid base course shall be in accordance with the thickness and grade indicated on the drawings. The thickness of each course shall be measured at intervals providing at least one measurement for each 500 square yards or part thereof of rigid base course. The thickness measurement shall be made by test holes, at least 3 inches in diameter through the course. The completed rigid base course shall not be more than 1/2 inch deficient in thickness nor more than 1/2 inch above or below the established grade. Where any of these tolerances are exceeded, the Contractor shall correct such areas by scarifying, adding new material of proper gradation or removing material, and compacting, as directed. Where the measured thickness is 1/2 inch or more

thicker than shown, the course will be considered as conforming with the specified thickness requirements plus 1/2 inch. The average job thickness shall be the average of the job measurements as specified above but within 1/4 inch of the thickness shown.

3.10 MAINTENANCE

The rigid base course shall be maintained in a satisfactory condition until accepted.

-- End of Section --

SECTION TABLE OF CONTENTS

DIVISION 02 - SITE WORK

SECTION 02754A

CONCRETE PAVEMENT

07/01

PART 1 GENERAL

1.1 REFERENCES
1.2 ACCEPTABILITY OF WORK
1.2.1 Evaluation Sampling
1.2.2 Surface Testing
1.2.2.1 Surface Smoothness Requirements
1.2.2.2 Surface Smoothness Testing Method
1.2.3 Edge Slump Testing and Conformance
1.2.4 Plan Grade Testing and Conformance
1.3 PRECONSTRUCTION TESTING OF MATERIALS
1.4 SUBMITTALS
1.5 EQUIPMENT
1.5.1 Batching and Mixing
1.5.2 Transporting Equipment
1.5.3 Delivery Equipment
1.5.4 Paver-Finisher
1.5.4.1 Paver-Finisher with Fixed Forms
1.5.4.2 Slipform Paver-Finisher
1.5.5 Curing Equipment
1.5.6 Texturing Equipment
1.5.6.1 Fabric Drag
1.5.7 Sawing Equipment
1.5.8 Straightedge

PART 2 PRODUCTS

2.1 CEMENTITIOUS MATERIALS
2.1.1 Portland Cement
2.1.2 Blended Cements
2.1.3 Pozzolan (Fly Ash)
2.2 AGGREGATES
2.2.1 Coarse Aggregate
2.2.2 Fine Aggregate
2.3 CHEMICAL ADMIXTURES
2.4 CURING MATERIALS
2.5 WATER
2.6 JOINT MATERIALS
2.6.1 Expansion Joint Material
2.6.2 Slip Joint Material
2.7 REINFORCING
2.7.1 General
2.8 Deformed Wire Fabric
2.9 DOWELS AND TIE BARS
2.9.1 Dowels
2.9.2 Tie Bars
2.10 EPOXY RESIN
2.11 SPECIFIED CONCRETE STRENGTH AND OTHER PROPERTIES
2.12 MIXTURE PROPORTIONS
2.12.1 Composition Concrete

2.12.2 Concrete Mixture Proportioning Studies
2.12.3 Mixture Proportioning Procedure
2.12.4 Average Strength Required for Mixtures

PART 3 EXECUTION

3.1 CONDITIONING OF UNDERLYING MATERIAL
3.2 WEATHER LIMITATIONS
3.2.1 Hot Weather Paving
3.2.2 Cold Weather Paving
3.3 CONCRETE PRODUCTION
3.3.1 General Requirements
3.3.2 Transporting and Transfer-Spreading Operations
3.4 PAVING
3.4.1 Consolidation
3.4.2 Operation
3.4.3 Required Results
3.4.4 Fixed Form Paving
3.4.5 Slipform Paving
3.4.6 Integral or Monolithic Curbs
3.4.7 Placing Reinforcing Steel
3.4.8 Placing Dowels and Tie Bars
3.4.8.1 Contraction Joints
3.4.8.2 Construction Joints-Fixed Form Paving
3.4.8.3 Dowels Installed in Hardened Concrete
3.4.8.4 Expansion Joints
3.5 FINISHING
3.5.1 Machine Finishing With Fixed Forms
3.5.2 Machine Finishing With Slipform Pavers
3.5.3 Surface Correction
3.5.4 Hand Finishing
3.5.5 Texturing
3.5.5.1 Burlap-Drag Surface Finish
3.5.6 Edging
3.6 CURING
3.6.1 Membrane Curing
3.6.2 Moist Curing
3.7 JOINTS
3.7.1 Longitudinal Construction Joints
3.7.2 Transverse Construction Joints
3.7.3 Expansion Joints
3.7.4 Slip Joints
3.7.5 Contraction Joints
3.7.5.1 Sawed Joints
3.7.6 Thickened Edge Joints
3.8 REPAIR, REMOVAL, AND REPLACEMENT OF SLABS
3.8.1 Removal and Replacement of Full Slabs
3.8.2 Repairing Spalls Along Joints
3.8.3 Areas Defective in Plan Grade or Smoothness
3.9 PAVEMENT PROTECTION
3.10 TESTING AND INSPECTION FOR CONTRACTOR QUALITY CONTROL (CQC)
3.10.1 Batch Plant Control
3.10.2 Concrete Mixture
3.10.3 Inspection Before Placing
3.10.4 Paving Operations
3.10.5 Curing Inspection
3.10.6 Cold-Weather Protection
3.10.7 Reports

-- End of Section Table of Contents --

SECTION 02754A

CONCRETE PAVEMENT
07/01

PART 1 GENERAL

1.1 REFERENCES

The publications listed below form a part of this specification to the extent referenced. The publications are referred to in the text by basic designation only.

ACI INTERNATIONAL (ACI)

ACI 211.1	(1991) Standard Practice for Selecting Proportions for Normal, Heavyweight, and Mass Concrete
ACI 301	(1999) Standard Specifications for Structural Concrete
ACI 305R	(1999) Hot Weather Concreting

AMERICAN SOCIETY FOR TESTING AND MATERIALS (ASTM)

ASTM A 184/A 184M	(1996) Fabricated Deformed Steel Bar Mats for Concrete Reinforcement
ASTM A 615/A 615M	(2000) Deformed and Plain Billet-Steel Bars for Concrete Reinforcement
ASTM A 497	(1999) Steel Welded Wire Fabric, Deformed, for Concrete Reinforcement
ASTM C 31/C 31M	(2000) Making and Curing Concrete Test Specimens in the Field
ASTM C 33	(1999ael) Concrete Aggregates
ASTM C 39/C 39M	(1999) Compressive Strength of Cylindrical Concrete Specimens
ASTM C 94/C 94M	(2000) Ready-Mixed Concrete
ASTM C 123	(1998) Lightweight Particles in Aggregate
ASTM C 143/C 143M	(2000) Slump of Hydraulic Cement Concrete
ASTM C 150	(1999a) Portland Cement
ASTM C 192/C 192M	(2000) Making and Curing Concrete Test Specimens in the Laboratory
ASTM C 231	(1997el) Air Content of Freshly Mixed Concrete by the Pressure Method
ASTM C 260	(2000) Air-Entraining Admixtures for Concrete

ASTM C 494/C 494M	(1999a) Chemical Admixtures for Concrete
ASTM C 595	(2000a) Blended Hydraulic Cements
ASTM C 618	(2000) Coal Fly Ash and Raw or Calcined Natural Pozzolan for Use as a Mineral Admixture in Concrete
ASTM C 666	(1997) Resistance of Concrete to Rapid Freezing and Thawing
ASTM C 881	(1999) Epoxy-Resin-Base Bonding Systems for Concrete
ASTM C 1077	(1998) Laboratories Testing Concrete and Concrete Aggregates for Use in Construction and Criteria for Laboratory Evaluation
ASTM D 1751	(1999) Preformed Expansion Joint Filler for Concrete Paving and Structural Construction (Nonextruding and Resilient Bituminous Types)
ASTM D 1752	(1984; R 1996el) Preformed Sponge Rubber and Cork Expansion Joint Fillers for Concrete Paving and Structural Construction

U.S. ARMY CORPS OF ENGINEERS (USACE)

COE CRD-C 130	(1989) Scratch Hardness of Coarse Aggregate Particles
COE CRD-C 300	(1990) Specifications for Membrane-Forming Compounds for Curing Concrete

NATIONAL READY-MIXED CONCRETE ASSOCIATION (NRMCA)

NRMCA CPMB 100	(1996) Concrete Plant Standards

1.2 ACCEPTABILITY OF WORK

The pavement will be accepted on the basis of tests made by the Government and by the Contractor or its suppliers, as specified herein. The Government may, at its discretion, make check tests to validate the results of the Contractor's testing. Concrete samples shall be taken by the Contractor at the placement to determine the slump, air content, and strength of the concrete. Test cylinders shall be made for determining conformance with the strength requirements of these specifications and, when required, for determining the time at which pavements may be placed into service. All air content measurements shall be determined in accordance with ASTM C 231. All slump tests shall be made in accordance with ASTM C 143/C 143M. All test cylinders shall be 6 by 12 inch cylinders and shall be fabricated in accordance with ASTM C 192/C 192M, using only steel molds, cured in accordance with ASTM C 31/C 31M, and tested in accordance with ASTM C 39/C 39M. A strength test shall be the average of the strengths of two cylinders made from the same sample of concrete and tested at 28 days. The Contractor shall furnish all materials, labor, and facilities required for molding, curing, testing, and protecting test specimens at the site and in the laboratory.

1.2.1 Evaluation Sampling

Sampling, testing, and mixture proportioning shall be performed by a commercial Testing Laboratory, conforming with ASTM C 1077. The individuals who sample and test concrete and concrete constituents shall be certified as American Concrete

Institute (ACI) Concrete Field Testing Technicians, Grade I. The individuals who perform the inspection of concrete shall be certified as ACI Concrete Construction Inspector, Level II. All mix design, weekly quality control reports, smoothness reports, and project certification reports shall be signed by a Registered Engineer.

1.2.2 Surface Testing

Surface testing for surface smoothness , edge slump and plan grade shall be performed as indicated below by the Testing Laboratory. The measurements shall be properly referenced in accordance with paving lane identification and stationing, and a report given to the Government within 24 hours after measurement is made. A final report of surface testing, signed by a Registered Engineer, containing all surface measurements and a description of all actions taken to correct deficiencies, shall be provided to the Government upon conclusion of surface testing.

1.2.2.1 Surface Smoothness Requirements

The finished surfaces of the pavements shall have no abrupt change of 1/8 inch or more, and all pavements shall be within the tolerances specified in Table 1 when checked with the straightedge.

TABLE 1
STRAIGHTEDGE SURFACE SMOOTHNESS--PAVEMENTS

Pavement Category	Direction of Testing	Tolerances inches
Hardstands, Parking Areas, Open Storage Areas	Longitudinal	1/4
	Transverse	1/4

1.2.2.2 Surface Smoothness Testing Method

The surface of the pavement shall be tested with the straightedge to identify all surface irregularities exceeding the tolerances specified above. The entire area of the pavement shall be tested in both a longitudinal and a transverse direction on parallel lines approximately 15 feet apart. The straightedge shall be held in contact with the surface and moved ahead one-half the length of the straightedge for each successive measurement. The amount of surface irregularity shall be determined by placing the straightedge on the pavement surface and allowing it to rest upon the two highest spots covered by its length and measuring the maximum gap between the straightedge and the pavement surface, in the area between these two high points.

1.2.3 Edge Slump Testing and Conformance

When slipform paving is used, not more than 15 percent of the total free edge of the slipformed portion of the pavement, shall have an edge slump exceeding 1/4 inch and no slab shall have an edge slump exceeding 3/8 inch. Edge slump shall be determined as above for surface smoothness, at each free edge of each slipformed paving lane constructed. Measurements shall be made at 5 to 15 foot spacings, and as directed. When edge slump exceeding the limits specified above is encountered on either side of the paving lane, additional straightedge measurements shall be made, if required, to define the linear limits of the excessive slump. The concrete for the entire width of the paving lane within these limits of excessive edge slump shall be removed and replaced. Adding concrete or paste to the edge or otherwise manipulating the plastic concrete after the sliding form has passed, or patching the hardened concrete, shall not be used as a method for correcting excessive edge slump.

1.2.4 Plan Grade Testing and Conformance

The finished surface of the pavements shall conform, within the tolerances shown in Table 1, to the lines, grades, and cross sections shown. The finished surface of new abutting pavements shall coincide at their juncture. The finished surface of airfield runway, taxiway, and apron pavements shall vary not more than 0.04 foot above or below the plan grade line or elevation indicated. The surfaces of other pavements shall vary not more than 0.06 foot above or below the plan grade line or elevation indicated. Each pavement category shall be checked by the Contractor for conformance with plan grade requirements by running lines of levels at intervals to determine the elevation at each joint intersection.

1.3 PRECONSTRUCTION TESTING OF MATERIALS

The Contractor shall not be entitled to any additional payment or extension of time because of delays caused by sampling and testing additional sources, or samples, necessitated by failure of any samples. Aggregates shall be sampled and tested by the Test Laboratory and shall be representative of the materials to be used for the project. Test results, signed by a Registered Engineer, shall be submitted 15 days before commencing paving. No aggregate shall be used unless test results show that it meets all requirements of these specifications, including compliance with ASTM C 33 and deleterious materials limitations.

1.4 SUBMITTALS

Government approval is required for submittals with a "G" designation; submittals not having a "G" designation are for information only. When used, a designation following the "G" designation identifies the office that will review the submittal for the Government. The following shall be submitted in accordance with Section 01330 SUBMITTAL PROCEDURES:

SD-03 Product Data

Equipment; G-RE

Manufacturer's literature on the concrete plant; mixing equipment; hauling equipment; placing and finishing, and curing equipment; at least 7 days prior to start of paving.

Paving; G-RE

Paving Schedules at least 7 days prior to start of paving.

Mixture Proportions; G-RE

The report of the Contractor's mixture proportioning studies showing the proportions of all ingredients and supporting information on aggregate and other materials that will be used in the manufacture of concrete, at least 14 days prior to commencing concrete placing operations.

1.5 EQUIPMENT

1.5.1 Batching and Mixing

The batching plant shall conform to NRMCA CPMB 100, the equipment requirements in ASTM C 94/C 94M, and as specified. Water shall not be weighed or measured cumulatively with another ingredient. All concrete materials batching shall meet ASTM C 94/C 94M requirements. Mixers shall be stationary mixers. Truck mixers shall not be used for mixing paving concrete. Batching, mixers, mixing time, permitted reduction of mixing time, and concrete uniformity shall meet the

requirements of ASTM C 94/C 94M, and shall be documented in the initial weekly QC Report.

1.5.2 Transporting Equipment

Transporting equipment shall be in conformance with ASTM C 94/C 94M and as specified herein. Concrete shall be transported to the paving site in rear-dump trucks or in agitators. Bottom-dump trucks shall not be used for delivery of concrete.

1.5.3 Delivery Equipment

When concrete transport equipment cannot operate on the paving lane, side-delivery transport equipment consisting of self-propelled moving conveyors shall be used to deliver concrete from the transport equipment and discharge it in front of the paver. Front-end loaders, dozers, or similar equipment shall not be used to distribute the concrete.

1.5.4 Paver-Finisher

The paver-finisher shall be a heavy-duty, self-propelled machine designed specifically for paving and finishing high quality pavement. The paver-finisher shall spread, consolidate, and shape the plastic concrete to the desired cross section in one pass. The paver-finisher shall be equipped with a full width "knock-down" auger, capable of operating in both directions, which will evenly spread the fresh concrete in front of the screed or extrusion plate. Immersion vibrators shall be gang mounted at the front of the paver on a frame equipped with suitable controls so that all vibrators can be operated at any desired depth within the slab or completely withdrawn from the concrete. The vibrators shall be automatically controlled so that they will be immediately stopped as forward motion of the paver ceases. The spacing of the immersion vibrators across the paving lane shall be as necessary to properly consolidate the concrete, but the clear distance between vibrators shall not exceed 30 inches, and the outside vibrators shall not exceed 12 inches from the edge of the lane. The paver-finisher shall be equipped with a transversely oscillating screed or an extrusion plate to shape, compact, and smooth the surface.

1.5.4.1 Paver-Finisher with Fixed Forms

The paver-finisher shall be equipped with wheels designed to ride the forms, keep it aligned with the forms, and to spread the preventing deformation of the forms.

1.5.4.2 Slipform Paver-Finisher

The slipform paver-finisher shall be automatically controlled and crawler mounted with padded tracks. Horizontal alignment shall be electronically referenced to a taut wire guideline. Vertical alignment shall be electronically referenced on both sides of the paver to a taut wire guideline, to an approved laser control system, or to a ski operating on a completed lane. Control from a slope-adjustment control or control operating from the underlying material shall not be used.

1.5.5 Curing Equipment

Equipment for curing is specified in paragraph CURING.

1.5.6 Texturing Equipment

Texturing equipment shall be as specified below.

1.5.6.1 Fabric Drag

A fabric drag shall consist of a piece of fabric material as wide as the lane width securely attached to a separate wheel mounted frame spanning the paving lane or to one of the other similar pieces of equipment. The material shall be wide enough to provide 12 to 18 inches dragging flat on the pavement surface. The fabric material shall be clean, reasonably new burlap, kept clean and saturated during use.

1.5.7 Sawing Equipment

Equipment for sawing joints and for other similar sawing of concrete shall be standard diamond-tip-bladed concrete saws mounted on a wheeled chassis.

1.5.8 Straightedge

The Contractor shall furnish and maintain at the job site one 12 foot straightedge for testing concrete surface smoothness. The straightedge shall be constructed of aluminum or magnesium alloy and shall have blades of box or box-girder cross section with flat bottom, adequately reinforced to insure rigidity and accuracy. Straightedges shall have handles for operation on the pavement.

PART 2 PRODUCTS

2.1 CEMENTITIOUS MATERIALS

Cementitious materials shall be portland cement, portland-pozzolan cement, or portland cement in combination with pozzolan and shall conform to appropriate specifications listed below.

2.1.1 Portland Cement

Portland cement shall conform to ASTM C 150 Type II, low-alkali.

2.1.2 Blended Cements

Blended cement shall conform to ASTM C 595 Type IP.

2.1.3 Pozzolan (Fly Ash)

Fly ash shall conform to ASTM C 618 Class F, including all the supplementary optional physical requirements. Fly ash shall conform to EPA requirements in accordance with Section 01670 RECYCLED / RECOVERED MATERIALS.

2.2 AGGREGATES

Aggregates shall consist of clean, hard, uncoated particles meeting the requirements of ASTM C 33, including deleterious materials, abrasion loss and soundness requirements of ASTM C 33, and other requirements specified herein. Aggregate not having a satisfactory demonstrable service record shall have a durability factor of 50 or more when subjected to freezing and thawing in concrete in accordance with ASTM C 666.

In addition to the grading requirements specified for coarse aggregate and for fine aggregate, the combined aggregate grading shall meet the following requirements.

a. If necessary, a blending aggregate shall be used to meet the required combined grading. This blending aggregate shall be batched separately. The combined grading of all aggregates used, in the proportions selected, shall be computed on the basis of cumulative percent retained on each sieve specified for fine and coarse aggregate.

b. The materials selected and the proportions used shall be such that when

the Coarseness Factor (CF) and the Workability Factor (W) are plotted on a diagram as described in d. below, the point thus determined shall fall within the parallelogram described therein.

c. The Coarseness Factor (CF) shall be determined from the the following equation:

CF = (cumulative percent retained on the 3/8 in. sieve)(100)/(cumulative percent retained on the No. 8 sieve)

The Workability Factor (W) is defined as the cumulative percent passing the No. 8 sieve. However, W shall be adjusted, upwards only, by 2.5 percentage points for each 94 pounds of cementitious material per cubic yard greater than 564 pounds per cubic yard.

d. A diagram shall be plotted using a rectangular scale with W on the Y-axis with units from 20 (bottom) to 45 (top), and with CF on the X-axis with units from 80 (left side) to 30 (right side). On this diagram a parallelogram shall be plotted with corners at the following coordinates (CF-75, W-28), (CF-75, W-40), (CF-45, W-32.5), and (CF-45, W-41). If the point determined by the intersection of the computed CF and W does not fall within the above parallelogram, the grading of each size of aggregate used and the proportions selected shall be changed as necessary.

e. In addition, the individual percent retained on each sieve shall be plotted for the combined aggregate grading, on either rectangular or semi-log graph paper. The graph shall show a relative smooth transition between coarse and fine aggregate and shall have no major valleys or peaks in the area smaller than the No. 8 sieve. If this plot does not meet the above criteria, the grading of each size aggregate used and the proportions selected shall be changed as necessary.

2.2.1 Coarse Aggregate

Coarse aggregate shall consist of crushed gravel, crushed stone, or a combination thereof. The nominal maximum size of the coarse aggregate shall be 1-1/2 inches. When the nominal maximum size is greater than 1 inch, the aggregates shall be furnished in two ASTM C 33 size groups, No. 67 and No. 4. The amount of deleterious material in each size of coarse aggregate shall not exceed the limits shown in ASTM C 33 Class 1N, 4M or 4S, depending on the weathering region, and the following limits:

a. Lightweight particles 1.0 max. percent by mass (ASTM C 123).

b. Other soft particles 2.0 max. percent by mass (COE CRD-C 130).

c. Total of all deleterious 5.0 max. percent by mass (substances listed in ASTM C 33 and above, exclusive of material finer than No. 200 sieve).

d. The separation medium for lightweight particles shall have a density of Sp. Gr. of 2.0.

2.2.2 Fine Aggregate

Fine aggregate shall consist of natural sand, manufactured sand, or a combination of the two, and shall be composed of clean, hard, durable particles. All fine aggregate shall be composed of clean, hard, durable particles meeting the requirements of ASTM C 33 and the requirements herein. The amount of deleterious material in the fine aggregate shall not exceed the limits in ASTM C 33and shall not exceed the following limits:

a. Lightweight particles (ASTM C 123) 1.0 percent max. by mass using a medium with a density of Sp. Gr. of 2.0.

b. The total of all deleterious material types, listed in ASTM C 33 and above, shall not exceed 3.0 percent of the mass of the fine aggregate.

2.3 CHEMICAL ADMIXTURES

Air-entraining admixture shall conform to ASTM C 260. An accelerator shall be used only when specified in paragraph SPECIFIED CONCRETE STRENGTH AND OTHER PROPERTIES and shall not be used to reduce the amount of cementitious material used. Accelerator shall conform to ASTM C 494/C 494M Type C. Calcium chloride and admixtures containing calcium chloride shall not be used. A water-reducing or retarding admixture shall meet the requirements of ASTM C 494/C 494M. Type G or H admixtures are not allowed.

2.4 CURING MATERIALS

Membrane forming curing compound shall be a white pigmented compound conforming to COE CRD-C 300. Burlap shall be new or shall be clean material never used for anything other than curing concrete.

2.5 WATER

Water for mixing and curing shall be clean, potable, and free of injurious amounts of oil, acid, salt, or alkali.

2.6 JOINT MATERIALS

2.6.1 Expansion Joint Material

Expansion joint filler shall be a preformed material conforming to ASTM D 1751 or ASTM D 1752 Type I or II. Expansion joint filler shall be 3/4 inch thick.

2.6.2 Slip Joint Material

Slip joint material shall be 1/4 inch thick expansion joint filler conforming to ASTM D 1751 or ASTM D 1752.

2.7 REINFORCING

2.7.1 General

Reinforcing bars shall conform to ASTM A 615/A 615M Grade 40 or 60 billet steel, size as shown on the drawings. Bar mats shall conform to ASTM A 184/A 184M. Reinforcement shall be free from loose, flaky rust, loose scale, oil, grease, mud, or other coatings that might reduce the bond with concrete.

2.8 Deformed Wire Fabric

Welded deformed steel wire fabric shall conform to ASTM A 497.

2.9 DOWELS AND TIE BARS

2.9.1 Dowels

Dowels shall be single piece, plain (non-deformed) steel bars conforming to ASTM A 615/A 615M Grade 60 or higher. Dowels shall be free of loose, flaky rust and loose scale and shall be clean and straight.

2.9.2 Tie Bars

Tie bars shall be deformed steel bars conforming to ASTM A 615/A 615M Grade 60.

Grade 60 or higher shall not be used for bars that are bent and straightened during construction.

2.10 EPOXY RESIN

All epoxy-resin materials shall be two-component materials conforming to ASTM C 881, Class as appropriate for each application temperature to be encountered; except, that in addition, the materials shall meet the following requirements:

a. Material for use for embedding dowels and anchor bolts shall be Type IV, Grade 3.

b. Material for use as patching for complete filling of spalls, wide cracks, and other voids and for use in preparing epoxy resin mortar shall be Type III, Grade as approved.

c. Material for injecting cracks shall be Type IV, Grade 1.

d. Material for bonding freshly mixed portland cement concrete, mortar, or freshly mixed epoxy resin concrete to hardened concrete shall be Type V, Grade as approved.

2.11 SPECIFIED CONCRETE STRENGTH AND OTHER PROPERTIES

Specified compressive strength, f'c, for concrete is 4000 psi at 28 days. Maximum allowable water-cementitious material ratio is 0.45 . The water-cementitious material ratio is based on absolute volume equivalency, where the ratio is determined using the weight of cement for a cement only mix, or using the total volume of cement plus pozzolan converted to an equivalent weight of cement by the absolute volume equivalency method described in ACI 211.1. The concrete shall be air-entrained with a total air content of 4 plus or minus 1 percent. The maximum allowable slump of the concrete shall be 3 inchesfor pavement constructed with fixed forms. For slipformed pavement, the maximum allowable slump shall be 1-1/4 inches. The strength of the concrete will be considered satisfactory so long as the average of all sets of three consecutive test results equals or exceeds the specified compressive strength f'c and no individual test result falls below the specified strength f'c by more than 500 psi. Additional analysis or testing, including taking cores and/or load tests may be required at the Contractor's expense when the strength of the concrete in the structure is considered potentially deficient.

2.12 MIXTURE PROPORTIONS

2.12.1 Composition Concrete

Composition concrete shall be composed of cementitious material, water, fine and coarse aggregates, and admixtures. Fly ash, if used, shall be used only at a rate between 15 and 35 percent by mass of the total cementitious material and conform to EPA requirements in accordance with Section 01670 RECYCLED / RECOVERED MATERIALS. Admixtures shall consist of air entraining admixture and may also include retarder or water-reducing admixture. High range water-reducing admixtures and admixtures to produce flowable concrete shall not be used. No substitutions shall be made in the materials used in the mixture proportions without additional tests to show that the quality of the concrete is satisfactory.

2.12.2 Concrete Mixture Proportioning Studies

Trial design batches, mixture proportioning studies, and testing shall be the responsibility of the Contractor, and shall be performed by the Test Laboratory and signed by a Registered Engineer. No concrete pavement shall be placed until the Contracting Officer has approved the Contractor's mixture proportions. All materials used in mixture proportioning studies shall be representative of

those proposed for use on the project. If there is a change in materials, additional mixture design studies shall be made using the new materials. Trial mixtures having proportions, slumps, and air content suitable for the work shall be based on methodology described in ACI 211.1. At least three different water-cementitious ratios, which will produce a range of strength encompassing that required on the project, shall be used. Laboratory trial mixtures shall be proportioned for maximum permitted slump and air content. Maximum sand content shall be 40 percent of the total aggregate SSD weight. Aggregate quantities shall be based on the mass in a saturated surface dry condition.

2.12.3 Mixture Proportioning Procedure

The Contractor shall perform the following:

a. Fabricate, cure and test 6 test cylinders per age for each mixture at 7 and 28 days.

b. Using the average strength for each w/(c+p), plot the results from each of the three mixtures on separate graphs for w/(c+p) versus 28-day strength.

c. From the graphs select a w/(c+p) which will produce a mixture giving a 28-day strength equal to the required strength determined in accordance with the following paragraph.

2.12.4 Average Strength Required for Mixtures

In order to ensure meeting, during production, the strength requirements specified, the mixture proportions selected shall produce a required average strength, f'cr, exceeding the specified strength, f'c, in accordance with procedures in Chapter 3 of ACI 301, "Proportioning."

PART 3 EXECUTION

3.1 CONDITIONING OF UNDERLYING MATERIAL

Underlying material, base course, upon which concrete is to be placed shall be clean, damp, and free from debris, waste concrete or cement, frost, ice, and standing or running water. After the underlying material has been prepared for concrete placement, no equipment shall be permitted thereon.

3.2 WEATHER LIMITATIONS

3.2.1 Hot Weather Paving

The temperature of concrete shall not exceed 90 degrees F. Steel forms, dowels and reinforcing shall be cooled prior to concrete placement when steel temperatures are greater than 120 degrees F.

3.2.2 Cold Weather Paving

The ambient temperature of the air at the placing site and the temperature of surfaces to receive concrete shall be not less 40 degrees F. The temperature of the concrete when placed shall be not less than 50 degrees F. Materials entering the mixer shall be free from ice, snow, or frozen lumps. Salt, chemicals or other materials shall not be incorporated in the concrete to prevent freezing. Calcium chloride shall not be used at any time. Covering and other means shall be provided for maintaining the concrete at a temperature of at least 50 degrees F for not less than 72 hours after placing, and at a temperature above freezing for the remainder of the curing period. Pavement damaged by freezing shall be completely removed and replaced at the Contractor's expense as specified in paragraph, REPAIR, REMOVAL, AND REPLACEMENT OF SLABS.

3.3 CONCRETE PRODUCTION

3.3.1 General Requirements

Concrete shall be deposited in front of the paver within 45 minutes from the time cement has been charged into the mixing drum, except that if the ambient temperature is above 90 degrees F, the time shall be reduced to 30 minutes. Every load of concrete delivered to the paving site shall be accompanied by a batch ticket from the operator of the batching plant. Tickets shall show at least the mass, or volume, of all ingredients in each batch delivered, and the time of day. Tickets shall be delivered to the placing foreman who shall keep them on file and deliver them to the Government daily.

3.3.2 Transporting and Transfer-Spreading Operations

Non-agitating equipment shall be used only on smooth roads and for haul time less than 15 minutes. No equipment shall be allowed to operate on the prepared and compacted underlying material in front of the paver-finisher.

3.4 PAVING

Pavement shall be constructed with paving and finishing equipment utilizing fixed forms or slipforms.

3.4.1 Consolidation

The paver vibrators shall be inserted into the concrete not closer to the underlying material than 2 inches. The vibrators or any tamping units in front of the paver shall be automatically controlled so that they shall be stopped immediately as forward motion ceases. Excessive vibration shall not be permitted. Concrete in small, odd-shaped slabs or in locations inaccessible to the paver mounted vibration equipment shall be vibrated with a hand-operated immersion vibrator. Vibrators shall not be used to transport or spread the concrete.

3.4.2 Operation

When the paver is operated between or adjacent to previously constructed pavement (fill-in lanes), provisions shall be made to prevent damage to the previously constructed pavement, including keeping the existing pavement surface free of any debris, and placing rubber mats beneath the paver tracks. Transversely oscillating screeds and extrusion plates shall overlap the existing pavement the minimum possible, but in no case more than 8 inches.

3.4.3 Required Results

The paver-finisher shall be operated to produce a thoroughly consolidated slab throughout, true to line and grade within specified tolerances. The paver-finishing operation shall produce a surface finish free of irregularities, tears, voids of any kind, and any other discontinuities. It shall produce only a very minimum of paste at the surface. Multiple passes of the paver-finisher shall not be permitted. The equipment and its operation shall produce a finished surface requiring no hand finishing, other than the use of cutting straightedges, except in very infrequent instances. No water, other than true fog sprays (mist), shall be applied to the concrete surface during paving and finishing.

3.4.4 Fixed Form Paving

Forms shall be steel, except that wood forms may be used for curves having a radius of 150 feet or less, and for fillets. Forms may be built up with metal or wood, added only to the base, to provide an increase in depth of not more

than 25 percent. The base width of the form shall be not less than eight-tenths of the vertical height of the form, except that forms 8 inches or less in vertical height shall have a base width not less than the vertical height of the form. Wood forms for curves and fillets shall be adequate in strength and rigidly braced. Forms shall be set on firm material cut true to grade so that each form section when placed will be firmly in contact with the underlying layer for its entire base. Forms shall not be set on blocks or on built-up spots of underlying material. Forms shall remain in place at least 12 hours after the concrete has been placed. Forms shall be removed without injuring the concrete.

3.4.5 Slipform Paving

The slipform paver shall shape the concrete to the specified and indicated cross section in one pass, and shall finish the surface and edges so that only a very minimum amount of hand finishing is required. Dowels shall not be installed by dowel inserters attached to the paver or by any other means of inserting the dowels into the plastic concrete.

3.4.6 Integral or Monolithic Curbs

Monolithic curbs shall be constructed of portland cement concrete conforming with these specifications except as modified herein. Forms for curbs shall be of similar material to that used for pavement. The outside form shall be of a depth equal to the combined depth of integral curb and pavement slab. The form may be a built-up section, the lower portion equal to the depth of the pavement slab and the upper portion equal to the depth of the integral curb. The built-up form shall be so designed as to assure rigid connection between lower and upper portions. The inside curb form shall be securely fastened to and supported by the outside form. Fastenings shall be designed so as not to obstruct satisfactory finishing and edging of top of curb and to permit early removal of the face of the form. Inside curb forms will not be required when approved procedures such as use of a "mule" or other finishing equipment is used to finish the surface of the plastic concrete to the required shape. The concrete curb shall be placed at the same time or as soon as practical after slab is placed, but in no case shall the time between the placing of the slab and placing of curb exceed 45 minutes. Concrete shall be thoroughly spaded or vibrated until well compacted and until a good bond is obtained between curb and slab. Transverse joints shall be the type and construction specified for transverse joints for the pavement slab on which curb is placed. Pavement joints shall extend through the curb except that horizontal dowels will not be required between joints in the curb. Top of curb shall be floated in such a manner as to compact the concrete thoroughly and produce a smooth even surface. Edges of curb and joints shall be rounded by using appropriate edging tools. Vertical edges of joints shall be dressed when the curb form is removed. While the concrete is green, the top and face of the curb shall be finished by rubbing the surface with a wood or concrete rubbing block and water until all blemishes, form marks, and tool marks are removed. Ample water shall be used during the rubbing to avoid plastered condition. The rubbed surface shall be brushed with a fine-textured brush to obtain a uniform surface texture. The face of the finished curb shall vary not more than .12 inches from the edge of a 10 ft straightedge, except at grade changes or curves. Visible surfaces and edges of the finished curb shall be free of blemishes, form and tool marks, and shall be uniform in color, shape, and appearance.

3.4.7 Placing Reinforcing Steel

Reinforcement shall be positioned on suitable chairs securely fastened to the subgrade prior to concrete placement, or may be placed on an initial layer of consolidated concrete, with the subsequent layer placed within 30 minutes of the first layer placement. If reinforcing for Continuously Reinforced Concrete Pavement (CRCP) is required, the entire operating procedure and equipment proposed shall be submitted for approval at least 30 days prior to proposed

start of paving.

3.4.8 Placing Dowels and Tie Bars

Dowels shall be installed with alignment not greater than 1/8 inch per ft. Except as otherwise specified below, location of dowels shall be within a horizontal tolerance of plus or minus 5/8 inch and a vertical tolerance of plus or minus 3/16 inch. The portion of each dowel intended to move within the concrete or expansion cap shall be painted with one coat of rust inhibiting primer paint, and then oiled just prior to placement. Dowels and tie bars in joints shall be omitted when the center of the dowel or tie bar is located within a horizontal distance from an intersecting joint equal to or less than one-fourth of the slab thickness.

3.4.8.1 Contraction Joints

Dowels and tie bars in longitudinal and transverse contraction joints within the paving lane shall be held securely in place by means of rigid metal basket assemblies. The dowels and tie bars shall be welded to the assembly or held firmly by mechanical locking arrangements that will prevent them from becoming distorted during paving operations. The basket assemblies shall be held securely in the proper location by means of suitable anchors.

3.4.8.2 Construction Joints-Fixed Form Paving

Installation of dowels and tie bars shall be by the bonded-in-place method, supported by means of devices fastened to the forms. Installation by removing and replacing in preformed holes will not be permitted.

3.4.8.3 Dowels Installed in Hardened Concrete

Installation shall be by bonding the dowels into holes drilled into the hardened concrete. Holes approximately 1/8 inch greater in diameter than the dowels shall be drilled into the hardened concrete. Dowels shall be bonded in the drilled holes using epoxy resin injected at the back of the hole before installing the dowel and extruded to the collar during insertion of the dowel so as to completely fill the void around the dowel. Application by buttering the dowel shall not be permitted. The dowels shall be held in alignment at the collar of the hole, after insertion and before the grout hardens, by means of a suitable metal or plastic collar fitted around the dowel. The vertical alignment of the dowels shall be checked by placing the straightedge on the surface of the pavement over the top of the dowel and measuring the vertical distance between the straightedge and the beginning and ending point of the exposed part of the dowel. Where tie bars are required in longitudinal construction joints of slipform pavement, bent tie bars shall be installed at the paver, in front of the transverse screed or extrusion plate. If tie bars are required, a standard keyway shall be constructed, and the bent tie bars shall be inserted into the plastic concrete through a 26 gauge thick metal keyway liner. Tie bars shall not be installed in preformed holes. The keyway liner shall be protected and shall remain in place and become part of the joint. Before placement of the adjoining paving lane, the tie bars shall be straightened, without spalling the concrete around the bar.

3.4.8.4 Expansion Joints

Dowels in expansion joints shall be installed by the bonded-in-place method or by bonding into holes drilled in hardened concrete, using procedures specified above.

3.5 FINISHING

Clary screeds, "bridge deck" finishers, or other rotating pipe or tube type equipment shall not be permitted. The sequence of machine operations shall be

transverse finishing, longitudinal machine floating if used, straightedge finishing, texturing, and then edging of joints. Hand finishing shall be used only infrequently and only on isolated areas of odd slab shapes and in the event of a breakdown of the mechanical finishing equipment. Supplemental hand finishing for machine finished pavement shall be kept to an absolute minimum. Equipment to be used for supplemental hand finishing shall primarily be 10 to 12 feet cutting straightedges; only very sparing use of bull floats shall be allowed. At no time shall water be added to the surface of the slab in any way, except for fog (mist) sprays to prevent plastic shrinkage cracking.

3.5.1 Machine Finishing With Fixed Forms

The machine shall be designed to ride the forms. Machines that cause displacement of the forms shall be replaced. The machine shall make only one pass over each area of pavement. If the equipment and procedures do not produce a surface of uniform texture, true to grade, in one pass, the operation shall be immediately stopped and the equipment, mixture, and procedures adjusted as necessary.

3.5.2 Machine Finishing With Slipform Pavers

If there is sufficient concrete slurry or fluid paste on the surface that it runs over the edge of the pavement, the paving operation shall be immediately stopped and the equipment, mixture, or operation modified to prevent formation of such slurry. Any slurry which does run down the vertical edges shall be immediately removed. No slurry, concrete or concrete mortar shall be used to build up along the edges of the pavement to compensate for excessive edge slump, either while the concrete is plastic or after it hardens.

3.5.3 Surface Correction

While the concrete is still plastic, irregularities and marks in the pavement surface shall be eliminated by means of cutting straightedges, 10 to 12 feet in length. Depressions shall be filled with freshly mixed concrete, struck off, consolidated, and refinished. Projections above the required elevation shall also be struck off and refinished. Long-handled, flat "bull floats" shall be used sparingly and only as necessary to correct minor, scattered surface defects. Finishing with hand floats and trowels shall be held to the absolute minimum necessary. Joints and edges shall not be over finished.

3.5.4 Hand Finishing

Hand finishing operations shall be used only for those unusual slabs as specified previously. Grate tampers (jitterbugs) shall not be used. As soon as placed and vibrated, the concrete shall be struck off and screeded. The surface shall be tamped with a strike-off and tamping screed, or vibratory screed. Immediately following the final tamping of the surface, the pavement shall be floated longitudinally. Long-handled, flat bull floats shall be used sparingly and only as necessary to correct surface defects. Finishing with hand floats and trowels shall be held to the absolute minimum necessary. Joints and edges shall not be over finished. No water shall be added to the pavement during finishing operations.

3.5.5 Texturing

Before the surface sheen has disappeared and before the concrete hardens, the surface of the pavement shall be given a texture as described herein. Following initial texturing on the first day of placement, the Placing Foreman, Contracting Officer representative, and a representative of the Using Agency shall inspect the texturing for compliance with design requirements. After curing is complete, all textured surfaces shall be thoroughly power broomed to remove all debris. The concrete in areas of recesses for tie-down anchors, lighting fixtures, and other outlets in the pavement shall be finished to

provide a surface of the same texture as the surrounding area.

3.5.5.1 Burlap-Drag Surface Finish

Surface texture shall be applied by dragging the surface of the pavement, in the direction of the concrete placement, with a moist burlap drag. The dragging shall produce a uniform finished surface having a fine sandy texture without disfiguring marks.

3.5.6 Edging

The edges of slipformed lanes shall not be edged. After texturing has been completed, the edge of the slabs along the forms shall be carefully finished with an edging tool to form a smooth rounded surface of 1/8 inch radius. No water shall be added to the surface during edging.

3.6 CURING

Concrete shall be continuously protected against loss of moisture and rapid temperature changes for at least 7 days from the completion of finishing operations. Unhardened concrete shall be protected from rain and flowing water. During hot weather with low humidity and/or wind, the Contractor shall institute measures to prevent plastic shrinkage cracks from developing. ACI 305R contains means of predicting plastic shrinkage cracking and preventative measures. Plastic shrinkage cracks that occur shall be filled by injection of epoxy resin after the concrete hardens. Plastic shrinkage cracks shall never be troweled over or filled with slurry. Curing shall be accomplished by one of the following methods.

3.6.1 Membrane Curing

A uniform coating of white-pigmented membrane-forming curing compound shall be applied to the entire exposed surface of the concrete including pavement edges as soon as the free water has disappeared from the surface after finishing. If evaporation is high and no moisture is present on the surface even though bleeding has not stopped, fog sprays shall be used to keep the surface moist until setting of the cement occurs. Curing compound shall then be immediately applied. Curing compound shall be applied to the finished surfaces by means of a self-propelled automatic spraying machine, equipped with multiple spraying nozzles with wind shields, spanning the newly paved lane. The curing compound shall be applied at a maximum application rate of 200 square feet per gallon. The application of curing compound by hand-operated, mechanical powered pressure sprayers will be permitted only on odd widths or shapes of slabs where indicated and on concrete surfaces exposed by the removal of forms. The compound shall form a uniform, continuous, cohesive film that will not check, crack, or peel and that will be free from pinholes and other discontinuities. Areas where the curing compound develops the above defects or is damaged by heavy rainfall, sawing or other construction operations within the curing period, shall be immediately resprayed.

3.6.2 Moist Curing

Concrete to be moist-cured shall be maintained continuously wet for the entire curing period, commencing immediately after finishing. Surfaces shall be cured by ponding, by continuous sprinkling, by continuously saturated burlap or cotton mats, or by continuously saturated plastic coated burlap. Impervious sheet curing shall not be used.

3.7 JOINTS

No deviation from the jointing pattern shown on the drawings shall be made without written approval of the Design District Pavement or Geotechnical Engineer. All joints shall be straight, perpendicular to the finished grade of

the pavement, and continuous from edge to edge or end to end of the pavement with no abrupt offset and no gradual deviation greater than 1/2 inch.

3.7.1 Longitudinal Construction Joints

Dowels or Tie bars shall be installed in the longitudinal construction joints, or the edges shall be thickened as indicated.

3.7.2 Transverse Construction Joints

Transverse construction joints shall be installed at a planned transverse joint, at the end of each day's placing operations and when concrete placement is interrupted. Transverse construction joints shall be constructed either by utilizing headers and hand placement and finishing techniques, or by placing concrete beyond the transverse construction joint location and then saw cutting full depth and removing concrete back to the transverse construction joint location. For the latter case, dowels shall be installed using methods for dowels installed in hardened concrete described above. All transverse construction joints shall be dowelled.

3.7.3 Expansion Joints

Expansion joints shall be formed where indicated, and about any structures and features that project through or into the pavement, using preformed joint filler of the type, thickness, and width indicated, and shall extend the full slab depth. Edges of the concrete at the joint face shall be edged. The joint filler strips shall be installed to form a recess at the pavement surface to be filled with joint sealant. Expansion joints shall be constructed with thickened edges for load transfer.

3.7.4 Slip Joints

Slip joints shall be installed the full depth of the slab using expansion joint preformed joint filler material attached to the face of the original concrete placement. A reservoir for joint sealant shall be constructed at the top of the joint. Edges of the joint face shall be edged.

3.7.5 Contraction Joints

Transverse and longitudinal contraction joints shall be of the weakened-plane or dummy type. Longitudinal contraction joints shall be constructed by sawing a groove in the hardened concrete with a power-driven saw. Transverse contraction joints shall be constructed in conformance with requirements for sawed joints.

3.7.5.1 Sawed Joints

Sawed contraction joints shall be constructed by sawing a groove in the concrete with a 1/8 inch blade to the indicated depth. The time of initial sawing shall vary depending on existing and anticipated weather conditions and shall be such as to prevent uncontrolled cracking of the pavement. Sawing of the joints shall commence as soon as the concrete has hardened sufficiently to permit cutting the concrete without chipping, spalling, or tearing. The joints shall be sawed at the required spacing consecutively in the sequence of the concrete placement. Sawing at a given joint location shall be discontinued when a crack develops ahead of the saw cut. Immediately after the joint is sawed, the saw cut and adjacent concrete surface shall be thoroughly flushed with water until all waste from sawing is removed from the joint. The surface shall be resprayed with curing compound as soon as free water disappears. The top of the joint opening and the joint groove at exposed edges shall be tightly sealed with cord or backer rod before the concrete in the region of the joint is resprayed with curing compound.

3.7.6 Thickened Edge Joints

Underlying material in the transition area shall meet the requirements for smoothness and compaction specified for all other areas of the underlying material.

3.8 REPAIR, REMOVAL, AND REPLACEMENT OF SLABS

New pavement slabs that contain full-depth cracks shall be removed and replaced, as specified herein at no cost to the Government. Removal and replacement shall be full depth, shall be full width of the paving lane, and the limit of removal shall be from each original transverse joint . The Contracting Officer will determine whether cracks extend full depth of the pavement and may require minimum 6 inch diameter cores to be drilled on the crack to determine depth of cracking. Cores shall be drilled and the hole later filled by the Contractor with a well consolidated concrete mixture bonded to the walls of the hole with epoxy resin. Drilling of cores and re filling holes shall be at no expense to the Government. Cracks that do not extend full depth of slab shall be cleaned and then pressure injected with epoxy resin, Type IV, Grade 1. The Contractor shall ensure that the crack is not widened during epoxy resin injection. Where a full depth crack intersects the original transverse joint, the slab(s) containing the crack shall be removed and replaced, with dowels installed, as required below. Spalls along joints shall be repaired as specified.

3.8.1 Removal and Replacement of Full Slabs

Unless there are keys or dowels present, all edges of the slab shall be sawcut full depth. If keys, dowels, or tie bars are present along any edges, these edges shall be sawed full depth 6 inches from the edge if only keys are present, or just beyond the end of dowels or tie bars if they are present. These joints shall then be carefully sawed on the joint line to within 1 inch of the depth of the dowel or key. The main slab shall be further divided by sawing full depth, at appropriate locations, and each piece lifted out and removed. The narrow strips along keyed or doweled edges shall be carefully broken up and removed. Care shall be taken to prevent damage to the dowels, tie bars, or keys or to concrete to remain in place. Protruding portions of dowels shall be painted and lightly oiled. The joint face below keys or dowels shall be suitably trimmed so that there is no abrupt offset. If under break occurs at any point along any edge, the area shall be hand-filled with concrete, producing an even joint face from top to bottom, before replacing the removed slab. If under break over 4 inches deep occurs, the entire slab containing the under break shall be removed and replaced. Where there are no dowels, tie bars, or keys on an edge, or where they have been damaged, dowels of the size and spacing as specified for other joints in similar pavement shall be installed by epoxy grouting them into holes drilled into the existing concrete. Original damaged dowels or tie bars shall be cut off flush with the joint face. All four edges of the new slab shall thus contain dowels or original keys or original tie bars. Prior to placement of new concrete, the underlying material shall be graded and recompacted, and the surfaces of all four joint faces shall be cleaned of all loose material and contaminants, and coated with a double application of membrane forming curing compound as bond breaker. Placement of concrete shall be as specified for original construction. The resulting joints around the new slab shall be prepared and sealed as specified.

3.8.2 Repairing Spalls Along Joints

Spalls along joints and cracks shall be repaired by first making a vertical saw cut at least 1 inch outside the spalled area and to a depth of at least 2 inches. Saw cuts shall be straight lines forming rectangular areas. The concrete between the saw cut and the joint, or crack, shall be chipped out to remove all unsound concrete. The cavity shall be thoroughly cleaned with high pressure water jets supplemented with compressed air to remove all loose

material. Immediately before filling the cavity, a prime coat shall be applied to the dry cleaned surface of all sides and bottom of the cavity, except any joint face. The prime coat shall be applied in a thin coating and scrubbed into the surface with a stiff-bristle brush. Prime coat for portland cement repairs shall be a neat cement grout and for epoxy resin repairs shall be epoxy resin, Type III, Grade 1. The cavity shall be filled with low slump portland cement concrete or mortar, or with epoxy resin concrete or mortar. Portland cement concrete shall be used for larger spalls, those more than 1/3 cu. ft. in size after removal operations; portland cement mortar shall be used for spalls between 0.03 and 1/3 cu. ft; and epoxy resin mortar or Type III, Grade 3 epoxy resin for those spalls less than 0.03 cu. ft. in size after removal operations. Portland cement concretes and mortars shall be very low slump mixtures, proportioned, mixed, placed, tamped, and cured. Epoxy resin mortars shall be made with Type III, Grade 1, epoxy resin, using proportions, mixing, placing, tamping and curing procedures as recommended by the manufacturer. Any repair material on the surrounding surfaces of the existing concrete shall be removed before it hardens. Where the spalled area abuts a joint, an insert or other bond-breaking medium shall be used to prevent bond at the joint face. A reservoir for the joint sealant shall be sawed to the dimensions required for other joints. In lieu of sawing, spalls not adjacent to joints, and popouts, both less than 6 inches in maximum dimension, may be prepared by drilling a core 2 inches in diameter greater than the size of the defect, centered over the defect, and 2 inches deep or 1/2 inch into sound concrete, whichever is greater. The core hole shall be repaired as specified above for other spalls.

3.8.3 Areas Defective in Plan Grade or Smoothness

In areas not meeting the specified limits for surface smoothness and plan grade, high areas shall be reduced to attain the required smoothness and grade, except as depth is limited below. High areas shall be reduced by grinding the hardened concrete with a surface grinding machine after the concrete is 14 days or more old. The depth of grinding shall not exceed 1/4 inch. All pavement areas requiring plan grade or surface smoothness corrections in excess of the specified limits, shall be removed and replaced. In pavement areas given a wire comb or tined texture, areas exceeding 25 square feet that have been corrected by rubbing or grinding shall be retextured by grooving machine sawn grooves meeting the requirements for the wire comb or tined texture. All areas in which grinding has been performed will be subject to the thickness tolerances specified in paragraph Thickness. Any grinding performed on individual slabs with excessive deficiencies shall be performed at the Contractor's own decision without entitlement to additional compensation if eventual removal of the slab is required.

3.9 PAVEMENT PROTECTION

The Contractor shall protect the pavement against all damage prior to final acceptance of the work. Traffic shall be excluded from the new pavement. As a construction expedient in paving intermediate lanes between newly paved pilot lanes, operation of the hauling equipment will be permitted on the new pavement after the pavement has been cured for 7 days and the joints have been sealed or otherwise protected. All new and existing pavement carrying construction traffic or equipment shall be continuously kept completely clean. Special cleaning and care shall be used where Contractor's traffic uses or crosses active airfield pavement.

3.10 TESTING AND INSPECTION FOR CONTRACTOR QUALITY CONTROL (CQC)

Paragraph ACCEPTABILITY OF WORK contains additional CQC requirements. The Contractor shall perform the inspection and tests described below and, based upon the results of these inspections and tests, shall take the action required and submit reports as specified. When, in the opinion of the Contracting Officer, the paving operation is out of control, concrete placement shall cease.

3.10.1 Batch Plant Control

A daily report shall be prepared indicating checks made for scale accuracy with test weights, checks of batching accuracy, and corrective action taken prior to and during placement for weighing or batching, type and source of cement used, type and source of pozzolan or slag used, amount and source of admixtures used, aggregate source, the required aggregate and water masses per cubic yd, amount of water as free moisture in each size of aggregate, and the batch aggregate and water masses per cubic yd. for each class of concrete batched during each day's plant operation.

3.10.2 Concrete Mixture

a. Air Content Testing. Air content tests shall be made when test specimens are fabricated. In addition, at least two other tests for air content shall be made on randomly selected batches of each separate concrete mixture produced during each 8-hour period of paving. Whenever air content reaches specified limits, an immediate confirmatory test shall be made. If the second test also shows air content at or exceeding specified limits, an adjustment shall immediately be made in the amount of air-entraining admixture batched to bring air content within specified limits. If the next adjusted batch of concrete is not within specified limits, concrete placement shall be halted until concrete air content is within specified limits.

b. Slump Testing. Slump tests shall be made when test specimens are fabricated. Additional tests shall be made when excessive variation in workability is reported by the placing foreman or Government inspector. Whenever slump approaches the maximum limit, an adjustment shall immediately be made in the batch masses of water and fine aggregate, without exceeding the maximum w/(c+p). When a slump result exceeds the specification limit, no further concrete shall be delivered to the paving site until adjustments have been made and slump is again within the limit.

c. Temperature. The temperature of the concrete shall be measured when strength specimens are fabricated.

d. Concrete Strength Testing. Four (4) cylinders from the same batch shall be fabricated, cured and tested for compressive strength, testing two cylinders at 7-day and two cylinders at 28-day age. A minimum of one set of four (4) cylinders shall be fabricated, cured and tested for each shift of concrete placement. Control charts for strength, showing the 7-day and 28-day CQC compressive strengths, and the 28-day required compressive strength, shall be maintained and submitted with weekly CQC Reports.

3.10.3 Inspection Before Placing

Underlying materials, joint locations and types, construction joint faces, forms, reinforcing, dowels, and embedded items shall be inspected by a Registered Engineer in sufficient time prior to each paving operation in order to certify to the Contracting Officer that they are ready to receive concrete. The results of each inspection shall be reported in writing, and the certification signed by the Registered Engineer, prior to each days' paving.

3.10.4 Paving Operations

The placing foreman shall supervise all placing and paving operations, shall determine that the correct quality of concrete is placed in each location as shown, shall insure that the concrete is consolidated full depth and that finishing is performed as specified. The placing foreman shall be responsible for measuring and recording concrete temperatures and ambient temperature

hourly during placing operations, weather conditions, time of placement, volume of concrete placed, and method of paving and any problems encountered.

3.10.5 Curing Inspection

a. Moist Curing Inspections. Each day on both work and non-work days, an inspection shall be made of all areas subject to moist curing. The surface moisture condition shall be noted and recorded. When any inspection finds an area of inadequate curing, immediate corrective action shall be taken, and the required curing period for the area shall be extended by 1 day.

b. Membrane Curing Inspection. At the end of each day's placement, the CQC Representative shall determine the quantity of compound used by measurement of the container; shall determine the area of concrete surface covered; shall then compute the rate of coverage in square feet per gallon and shall also note whether or not coverage is uniform. When the coverage rate of the curing compound is less than that specified or when the coverage is not uniform, the entire surface shall be sprayed again.

3.10.6 Cold-Weather Protection

At least once per day, an inspection shall be made of all areas subject to cold-weather protection. Any deficiencies shall be noted, corrected, and reported.

3.10.7 Reports

All results of tests or inspections conducted shall be reported informally as they are completed and in writing daily. A weekly report, signed by a registered engineer, shall be prepared for the updating of control charts and test data, and all CQC inspections and actions covering the entire period from the start of the construction through the current week. Reports of failures and the action taken shall be confirmed in writing in the routine reports. The Contracting Officer has the right to examine all CQC records. A copy of weekly reports shall be submitted to the Contracting Officer. At the completion of concrete placement, a certification report shall be prepared containing mix designs, all updated control charts and concrete test data, quality control reports, smoothness reports, and other pertinent data on the concrete, with a certification by a registered engineer that the concrete placed meets all specification requirements. A copy of the certification report shall be submitted to the Contracting Officer.

-- End of Section --

SECTION TABLE OF CONTENTS

DIVISION 02 - SITE WORK

SECTION 02760A

FIELD MOLDED SEALANTS FOR SEALING JOINTS IN RIGID PAVEMENTS

03/97

PART 1 GENERAL

1.1 REFERENCES
1.2 SUBMITTALS
1.3 TEST REQUIREMENTS
1.4 EQUIPMENT
1.4.1 Joint Cleaning Equipment
1.4.1.1 Tractor-Mounted Routing Tool
1.4.1.2 Concrete Saw
1.4.1.3 Sandblasting Equipment
1.4.1.4 Waterblasting Equipment
1.4.1.5 Hand Tools
1.4.2 Sealing Equipment
1.4.2.1 Cold-Applied, Single-Component Sealing Equipment
1.5 TRIAL JOINT SEALANT INSTALLATION
1.6 DELIVERY AND STORAGE
1.7 ENVIRONMENTAL CONDITIONS

PART 2 PRODUCTS

2.1 SEALANTS
2.2 PRIMERS
2.3 BACKUP MATERIALS
2.4 BOND BREAKING TAPES

PART 3 EXECUTION

3.1 PREPARATION OF JOINTS
3.1.1 Sawing
3.1.1.1 Facing of Joints
3.1.1.2 Refacing of Random Cracks
3.1.2 Sandblasting
3.1.3 Back-Up Material
3.1.4 Bond Breaking Tape
3.1.5 Rate of Progress of Joint Preparation
3.2 PREPARATION OF SEALANT
3.2.1 Single-Component, Cold-Applied Sealants
3.3 INSTALLATION OF SEALANT
3.3.1 Time of Application
3.3.2 Sealing Joints
3.4 INSPECTION
3.4.1 Joint Cleaning
3.4.2 Joint Sealant Application Equipment
3.4.3 Joint Sealant
3.5 CLEAN-UP

-- End of Section Table of Contents --

SECTION 02760A

FIELD MOLDED SEALANTS FOR SEALING JOINTS IN RIGID PAVEMENTS
03/97

PART 1 GENERAL

1.1 REFERENCES

The publications listed below form a part of this specification to the extent referenced. The publications are referred to in this text by the basic designation only.

AMERICAN SOCIETY FOR TESTING AND MATERIALS (ASTM)

ASTM C 509	(1994) Elastomeric Cellular Preformed Gasket and Sealing Material
ASTM D 789	(1998) Determination of Relative Viscosity and Moisture Content of Polyamide (PA)
ASTM D 5893	(1996) Cold Applied, Single Component Chemically Curing Silicon Joint Sealant for Portland Cement Concrete Pavement

1.2 SUBMITTALS

Government approval is required for submittals with a "G" designation; submittals not having a "G" designation are for information only. When used, a designation following the "G" designation identifies the office that will review the submittal for the Government. The following shall be submitted in accordance with Section 01330 SUBMITTAL PROCEDURES:

SD-03 Product Data

Manufacturer's Recommendations; G-RE.

Where installation procedures, or any part thereof, are required to be in accordance with the manufacturer's recommendations, printed copies of these recommendations, 14 days prior to use on the project. Installation of the material will not be allowed until the recommendations are received. Failure to furnish these recommendations can be cause for rejection of the material.

Construction Equipment List; G-RE.

List of proposed equipment to be used in performance of construction work including descriptive data, 14 days prior to use on the project.

SD-04 Samples

Materials;

Samples of the materials (sealant, primer if required, and backup material), in sufficient quantity for testing.

1.3 TEST REQUIREMENTS

The joint sealant and backup or separating material shall be tested for

conformance with the referenced applicable material specification. Testing of the materials shall be performed in an approved independent laboratory and certified copies of the test reports shall be submitted and approved 14 days prior to the use of the materials at the job site. Samples will be retained by the Government for possible future testing should the materials appear defective during or after application. Conformance with the requirements of the laboratory tests specified will not constitute final acceptance of the materials. Final acceptance will be based on the performance of the in-place materials.

1.4 EQUIPMENT

Machines, tools, and equipment used in the performance of the work required by this section shall be approved before the work is started and shall be maintained in satisfactory condition at all times.

1.4.1 Joint Cleaning Equipment

1.4.1.1 Tractor-Mounted Routing Tool

The routing tool used for removing old sealant from the joints shall be of such shape and dimensions and so mounted on the tractor that it will not damage the sides of the joints. The tool shall be designed so that it can be adjusted to remove the old material to varying depths as required. The use of V-shaped tools or rotary impact routing devices will not be permitted. Hand-operated spindle routing devices may be used to clean and enlarge random cracks.

1.4.1.2 Concrete Saw

A self-propelled power saw with water-cooled diamond or abrasive saw blades will be provided for cutting joints to the depths and widths specified or for refacing joints or cleaning sawed joints where sandblasting does not provide a clean joint.

1.4.1.3 Sandblasting Equipment

Sandblasting equipment shall include an air compressor, hose, and long-wearing venturi-type nozzle of proper size, shape and opening. The maximum nozzle opening should not exceed 1/4 inch. The air compressor shall be portable and shall be capable of furnishing not less than 150 cubic feet per minute and maintaining a line pressure of not less than 90 psi at the nozzle while in use. Compressor capability under job conditions must be demonstrated before approval. The compressor shall be equipped with traps that will maintain the compressed air free of oil and water. The nozzle shall have an adjustable guide that will hold the nozzle aligned with the joint approximately 1 inch above the pavement surface. The height, angle of inclination and the size of the nozzle shall be adjusted as necessary to secure satisfactory results.

1.4.1.4 Waterblasting Equipment

Waterblasting equipment shall include a trailer-mounted water tank, pumps, high-pressure hose, wand with safety release cutoff control, nozzle, and auxiliary water resupply equipment. The water tank and auxiliary resupply equipment shall be of sufficient capacity to permit continuous operations. The nozzle shall have an adjustable guide that will hold the nozzle aligned with the joint approximately 1 inch above the pavement surface. The height, angle of inclination and the size of the nozzle shall be adjustable as necessary to obtain satisfactory results. A pressure gauge mounted at the pump shall show at all times the pressure in pounds per square inch at which the equipment is operating.

1.4.1.5 Hand Tools

Hand tools may be used, when approved, for removing defective sealant from a crack and repairing or cleaning the crack faces.

1.4.2 Sealing Equipment

1.4.2.1 Cold-Applied, Single-Component Sealing Equipment

The equipment for installing ASTM D 5893 single component joint sealants shall consist of an extrusion pump, air compressor, following plate, hoses, and nozzle for transferring the sealant from the storage container into the joint opening. The dimension of the nozzle shall be such that the tip of the nozzle will extend into the joint to allow sealing from the bottom of the joint to the top. The initially approved equipment shall be maintained in good working condition, serviced in accordance with the supplier's instructions, and shall not be altered in any way without obtaining prior approval. Small hand-held air-powered equipment (i.e., caulking guns) may be used for small applications.

1.5 TRIAL JOINT SEALANT INSTALLATION

Prior to the cleaning and sealing of the joints for the entire project, a test section of at least 200 feet long shall be prepared using the specified materials and approved equipment, so as to demonstrate the proposed joint preparation and sealing of all types of joints in the project. Following the completion of the test section and before any other joint is sealed, the test section shall be inspected to determine that the materials and installation meet the requirements specified. If it is determined that the materials or installation do not meet the requirements, the materials shall be removed, and the joints shall be recleaned and resealed at no cost to the Government. When the test section meets the requirements, it may be incorporated into the permanent work. All other joints shall be prepared and sealed in the manner approved for sealing the test section.

1.6 DELIVERY AND STORAGE

Materials delivered to the job site shall be inspected for defects, unloaded, and stored with a minimum of handling to avoid damage. Storage facilities shall be provided by the Contractor at the job site for maintaining materials at the temperatures and conditions recommended by the manufacturer.

1.7 ENVIRONMENTAL CONDITIONS

The ambient air temperature and the pavement temperature within the joint wall shall be a minimum of 50 degrees F and rising at the time of application of the materials. Sealant shall not be applied if moisture is observed in the joint.

PART 2 PRODUCTS

2.1 SEALANTS

Materials for sealing cracks in the various paved areas indicated on the drawings shall be as follows:

Area	Sealing Material
Surfaces Sloped 6H:1V or Steeper	ASTM D 5893 (Non-Sag)
All Other Surfaces	ASTM D 5893

2.2 PRIMERS

Primers, when their use is recommended by the manufacturer of the sealant, shall

be as recommended by the manufacturer of the sealant.

2.3 BACKUP MATERIALS

The backup material shall be a compressible, nonshrinking, nonstaining, nonabsorbing material and shall be nonreactive with the joint sealant. The material shall have a melting point at least 5 degrees F greater than the pouring temperature of the sealant being used when tested in accordance with ASTM D 789. The material shall have a water absorption of not more than 5 percent of the sample weight when tested in accordance with ASTM C 509. The backup material shall be 25 plus or minus 5 percent larger in diameter than the nominal width of the joint.

2.4 BOND BREAKING TAPES

The bond breaking tape or separating material shall be a flexible, nonshrinkable, nonabsorbing, nonstaining, and nonreacting adhesive-backed tape. The material shall have a melting point at least 5 degrees F greater than the pouring temperature of the sealant being used when tested in accordance with ASTM D 789. The bond breaker tape shall be approximately 1/8 inch wider than the nominal width of the joint and shall not bond to the joint sealant.

PART 3 EXECUTION

3.1 PREPARATION OF JOINTS

Immediately before the installation of the sealant, the joints shall be thoroughly cleaned to remove all laitance, curing compound, filler, protrusions of hardened concrete, and old sealant from the sides and upper edges of the joint space to be sealed.

3.1.1 Sawing

3.1.1.1 Facing of Joints

Facing of joints shall be accomplished using a concrete saw as specified in paragraph EQUIPMENT to saw through sawed and filler-type joints to loosen and remove material until the joint is clean and open to the full specified width and depth. The blade shall be stiffened with a sufficient number of suitable dummy (used) blades or washers. Immediately following the sawing operation, the joint opening shall be thoroughly cleaned using a water jet to remove all saw cuttings and debris.

3.1.1.2 Refacing of Random Cracks

Sawing of the cracks shall be accomplished using a power-driven concrete saw as specified in paragraph EQUIPMENT. The saw blade shall be 6 inches or less in diameter to enable the saw to follow the trace of the crack. The blade shall be stiffened as necessary with suitable dummy (or used) blades or washers. Immediately following the sawing operation, the crack opening shall be thoroughly cleaned using a water jet to remove all saw cuttings and debris.

3.1.2 Sandblasting

The newly exposed concrete joint faces and the pavement surfaces extending a minimum of 1/2 inch from the joint edges shall be sandblasted or waterblasted clean. A multiple-pass technique shall be used until the surfaces are free of dust, dirt, curing compound, filler, old sealant residue, or any foreign debris that might prevent the bonding of the sealant to the concrete. After final cleaning and immediately prior to sealing, the joints shall be blown out with compressed air and left completely free of debris and water.

3.1.3 Back-Up Material

When the joint opening is of a greater depth than indicated for the sealant depth, the lower portion of the joint opening shall be plugged or sealed off using a back-up material to prevent the entrance of the sealant below the specified depth. Care shall be taken to ensure that the backup material is placed at the specified depth and is not stretched or twisted during installation.

3.1.4 Bond Breaking Tape

Where inserts or filler materials contain bitumen, or the depth of the joint opening does not allow for the use of a backup material, a bond breaker separating tape will be inserted to prevent incompatibility with the filler materials and three-sided adhesion of the sealant. The tape shall be securely bonded to the bottom of the joint opening so it will not float up into the new sealant.

3.1.5 Rate of Progress of Joint Preparation

The stages of joint preparation which include sandblasting, air pressure cleaning and placing of the back-up material shall be limited to only that lineal footage that can be sealed during the same day.

3.2 PREPARATION OF SEALANT

3.2.1 Single-Component, Cold-Applied Sealants

The ASTM D 5893 sealant and containers shall be inspected prior to use. Any materials that contain water, hard caking of any separated constituents, nonreversible jell, or materials that are otherwise unsatisfactory shall be rejected. Settlement of constituents in a soft mass that can be readily and uniformly remixed in the field with simple tools will not be cause for rejection.

3.3 INSTALLATION OF SEALANT

3.3.1 Time of Application

Joints shall be sealed immediately following final cleaning of the joint walls and following the placement of the separating or backup material. Open joints that cannot be sealed under the conditions specified, or when rain interrupts sealing operations shall be recleaned and allowed to dry prior to installing the sealant.

3.3.2 Sealing Joints

Immediately preceding, but not more than 50 feet ahead of the joint sealing operations, a final cleaning with compressed air shall be performed. The joints shall be filled from the bottom up to 1/4 inch plus or minus 1/16 inch below the pavement surface. Excess or spilled sealant shall be removed from the pavement by approved methods and shall be discarded. The sealant shall be installed in such a manner as to prevent the formation of voids and entrapped air. In no case shall gravity methods or pouring pots be used to install the sealant material. Traffic shall not be permitted over newly sealed pavement until authorized by the Contracting Officer. When a primer is recommended by the manufacturer, it shall be applied evenly to the joint faces in accordance with the manufacturer's instructions. Joints shall be checked frequently to ensure that the newly installed sealant is cured to a tack-free condition within the time specified.

3.4 INSPECTION

3.4.1 Joint Cleaning

Joints shall be inspected during the cleaning process to correct improper equipment and cleaning techniques that damage the concrete pavement in any manner. Cleaned joints shall be approved prior to installation of the separating or back-up material and joint sealant.

3.4.2 Joint Sealant Application Equipment

The application equipment shall be inspected to ensure conformance to temperature requirements, proper proportioning and mixing (if two-component sealant) and proper installation. Evidences of bubbling, improper installation, failure to cure or set shall be cause to suspend operations until causes of the deficiencies are determined and corrected.

3.4.3 Joint Sealant

The joint sealant shall be inspected for proper rate of cure and set, bonding to the joint walls, cohesive separation within the sealant, reversion to liquid, entrapped air and voids. Sealants exhibiting any of these deficiencies at any time prior to the final acceptance of the project shall be removed from the joint, wasted, and replaced as specified herein at no additional cost to the Government.

3.5 CLEAN-UP

Upon completion of the project, all unused materials shall be removed from the site and the pavement shall be left in a clean condition.

-- End of Section --

SECTION TABLE OF CONTENTS

DIVISION 02 - SITE WORK

SECTION 02763A

PAVEMENT MARKINGS

04/01

PART 1 GENERAL

1.1 REFERENCES
1.2 SUBMITTALS
1.3 DELIVERY AND STORAGE
1.4 EQUIPMENT
1.4.1 Thermoplastic Application Equipment
1.4.1.1 Thermoplastic Material
1.4.1.2 Application Equipment
1.4.1.3 Mobile and Maneuverable
1.4.2 Reflective Media Dispenser
1.4.3 Preformed Tape Application Equipment
1.4.4 Surface Preparation Equipment
1.4.4.1 Sandblasting Equipment
1.4.4.2 Waterblast Equipment
1.4.5 Marking Removal Equipment
1.4.5.1 Shotblasting Equipment
1.4.5.2 Chemical Equipment
1.4.6 Traffic Controls
1.5 MAINTENANCE OF TRAFFIC
1.5.1 Roads, Streets, and Parking Areas
1.6 WEATHER LIMITATIONS FOR REMOVAL

PART 2 PRODUCTS

2.1 THERMOPLASTIC COMPOUNDS
2.1.1 Composition Requirements
2.1.2 Physical Properties
2.1.2.1 Color
2.1.2.2 Drying Time
2.1.2.3 Softening Point
2.1.2.4 Specific Gravity
2.1.3 Asphalt Concrete Primer
2.1.4 Portland Cement Concrete Primer
2.2 PREFORMED TAPE
2.3 SAMPLING AND TESTING

PART 3 EXECUTION

3.1 SURFACE PREPARATION
3.1.1 Cleaning Existing Pavement Markings
3.1.2 Cleaning Concrete Curing Compounds
3.2 APPLICATION
3.2.1 Thermoplastic Compounds
3.2.1.1 Longitudinal Markings
3.2.1.2 Primer
3.2.1.3 Markings
3.2.2 Preformed Tape

-- End of Section Table of Contents --

SECTION 02763A

PAVEMENT MARKINGS
04/01

PART 1 GENERAL

1.1 REFERENCES

The publications listed below form a part of this specification to the extent referenced. The publications are referred to in the text by basic designation only.

AMERICAN SOCIETY FOR TESTING AND MATERIALS (ASTM)

ASTM D 792	(1998) Density and Specific Gravity (Relative Density) of Plastics by Displacement
ASTM D 4505	(1996) Preformed Plastic Pavement Marking Tape for Extended Service Life
ASTM E 28	(1999) Softening Point of Resins by Ring and Ball Apparatus

1.2 SUBMITTALS

Government approval is required for submittals with a "G" designation; submittals not having a "G" designation are for information only. When used, a designation following the "G" designation identifies the office that will review the submittal for the Government. The following shall be submitted in accordance with Section 01330 SUBMITTAL PROCEDURES:

SD-03 Product Data

Equipment; G-RE

Lists of proposed equipment, including descriptive data, and notifications of proposed Contractor actions as specified in this section. List of removal equipment shall include descriptive data indicating area of coverage per pass, pressure adjustment range, tank and flow capacities, and safety precautions required for the equipment operation.

Composition Requirements; G-RE

Manufacturer's current printed product description and Material Safety Data Sheets (MSDS) for each type thermoplastic proposed for use.

Qualifications;

Document certifying that personnel are qualified for equipment operation and handling of chemicals.

SD-06 Test Reports

Sampling and Testing;

Certified copies of the test reports, prior to the use of the materials at the jobsite. Testing shall be performed in an approved

independent laboratory.

SD-07 Certificates

Volatile Organic Compound (VOC);

Certificate stating that the proposed pavement marking material meets the VOC regulations of the local Air Pollution Control District having jurisdiction over the geographical area in which the project is located.

1.3 DELIVERY AND STORAGE

All materials shall be delivered and stored in sealed containers that plainly show the designated name, formula or specification number, batch number, color, date of manufacture, manufacturer's name, and directions, all of which shall be plainly legible at time of use.

1.4 EQUIPMENT

All machines, tools and equipment used in the performance of the work shall be approved and maintained in satisfactory operating condition. Equipment operating on roads and runways shall display low speed traffic markings and traffic warning lights.

1.4.1 Thermoplastic Application Equipment

1.4.1.1 Thermoplastic Material

Thermoplastic material shall be applied to the primed pavement surface by spray techniques or by the extrusion method, wherein one side of the shaping die is the pavement and the other three sides are contained by, or are part of, suitable equipment for heating and controlling the flow of material. By either method, the markings shall be applied with equipment that is capable of providing continuous uniformity in the dimensions of the stripe.

1.4.1.2 Application Equipment

a. Application equipment shall provide continuous mixing and agitation of the material. Conveying parts of the equipment between the main material reservoir and the extrusion shoe or spray gun shall prevent accumulation and clogging. All parts of the equipment which come into contact with the material shall be easily accessible and exposable for cleaning and maintenance. All mixing and conveying parts up to and including the extrusion shoes and spray guns shall maintain the material at the required temperature with heat-transfer oil or electrical-element-controlled heat.

b. The application equipment shall be constructed to ensure continuous uniformity in the dimensions of the stripe. The applicator shall provide a means for cleanly cutting off stripe ends squarely and shall provide a method of applying "skiplines". The equipment shall be capable of applying varying widths of traffic markings.

c. The applicator shall be equipped with a drop-on type bead dispenser capable of uniformly dispensing reflective glass spheres at controlled rates of flow. The bead dispenser shall be automatically operated and shall begin flow prior to the flow of composition to assure that the strip is fully reflectorized.

1.4.1.3 Mobile and Maneuverable

Application equipment shall be mobile and maneuverable to the extent that straight lines can be followed and normal curves can be made in a true arc. The equipment used for the placement of thermoplastic pavement markings shall be of two general types: mobile applicator and portable applicator.

a. Mobile Application Equipment: The mobile applicator shall be defined as a truck-mounted, self-contained pavement marking machine that is capable of hot applying thermoplastic by either the extrusion or spray method. The unit shall be equipped to apply the thermoplastic marking material at temperatures exceeding 375 degrees F, at widths varying from 3 to 12 inches and in thicknesses varying from 0.020 to 0.190 inch and shall have an automatic drop-on bead system. The mobile unit shall be capable of operating continuously and of installing a minimum of 20,000 lineal feet of longitudinal markings in an 8-hour day.

(1) The mobile unit shall be equipped with a melting kettle which holds a minimum of 6000 pounds of molten thermoplastic material. The kettle shall be capable of heating the thermoplastic composition to temperatures of 375 to 425 degrees F. A thermostatically controlled heat transfer liquid shall be used. Heating of the composition by direct flame will not be allowed. Oil and material temperature gauges shall be visible at both ends of the kettle. The mobile unit shall be equipped with a minimum of two extrusion shoes located one on each side of the truck, and shall be capable of marking simultaneous edgeline and centerline stripes. Each extrusion shoe shall be a closed, oil-jacketed unit; shall hold the molten thermoplastic at a temperature of 375 to 425 degrees F; and shall be capable of extruding a line of 3 to 8 inches in width; and at a thickness of not less than 0.125 inch nor more than 0.190 inch, and of generally uniform cross section.

(2) The mobile unit shall be equipped with an electronic programmable line pattern control system. The control system shall be capable of applying skip or solid lines in any sequence, through any and all of the extrusion shoes, and in programmable cycle lengths. In addition, the mobile unit shall be equipped with an automatic counting mechanism capable of recording the number of lineal feet of thermoplastic markings applied to the pavement surface with an accuracy of 0.5 percent.

b. Portable Application Equipment: The portable applicator shall be defined as hand-operated equipment, specifically designed for placing special markings such as crosswalks, stopbars, legends, arrows, and short lengths of lane, edge and centerlines. The portable applicator shall be capable of applying thermoplastic pavement markings by the extrusion method. The portable applicator shall be loaded with hot thermoplastic composition from the melting kettles on the mobile applicator. The portable applicator shall be equipped with all the necessary components, including a materials storage reservoir, bead dispenser, extrusion shoe, and heating accessories, so as to be capable of holding the molten thermoplastic at a temperature of 375 to 425 degrees F, of extruding a line of 3 to 12 inches in width, and in thicknesses of not less than 0.125 inch nor more than 0.190 inch and of generally uniform cross section.

1.4.2 Reflective Media Dispenser

The dispenser for applying the reflective media shall be attached to the paint dispenser and shall operate automatically and simultaneously with the applicator through the same control mechanism. The dispenser shall be capable of adjustment and designed to provide uniform flow of reflective media over the full length and width of the stripe at the rate of coverage specified in paragraph APPLICATION, at all operating speeds of the applicator to which it is attached.

1.4.3 Preformed Tape Application Equipment

Mechanical application equipment shall be used for the placement of preformed marking tape. Mechanical application equipment shall be defined as a mobile pavement marking machine specifically designed for use in applying precoated, pressure-sensitive pavement marking tape of varying widths, up to 12 inches. The applicator shall be equipped with rollers, or other suitable compactive

device, to provide initial adhesion of the preformed, pressure-sensitive marking tape with the pavement surface. Additional hand-operated rollers shall be used as required to properly seat the thermoplastic tape.

1.4.4 Surface Preparation Equipment

1.4.4.1 Sandblasting Equipment

Sandblasting equipment shall include an air compressor, hoses, and nozzles of proper size and capacity as required for cleaning surfaces to be painted. The compressor shall be capable of furnishing not less than 150 cfm of air at a pressure of not less than 90 psi at each nozzle used, and shall be equipped with traps that will maintain the compressed air free of oil and water.

1.4.4.2 Waterblast Equipment

The water pressure shall be specified at 2600 psi at 140 degrees F in order to adequately clean the surfaces to be marked.

1.4.5 Marking Removal Equipment

Equipment shall be mounted on rubber tires and shall be capable of removing markings from the pavement without damaging the pavement surface or joint sealant. Waterblasting equipment shall be capable of producing an adjustable, pressurized stream of water. Sandblasting equipment shall include an air compressor, hoses, and nozzles. The compressor shall be equipped with traps to maintain the air free of oil and water.

1.4.5.1 Shotblasting Equipment

Shotblasting equipment shall be capable of producing an adjustable depth of removal of marking and pavement. Each unit shall be self-cleaning and self-contained, shall be able to confine dust and debris from the operation, and shall be capable of recycling the abrasive for reuse.

1.4.5.2 Chemical Equipment

Chemical equipment shall be capable of application and removal of chemicals from the pavement surface, and shall leave only non-toxic biodegradeable residue.

1.4.6 Traffic Controls

Suitable warning signs shall be placed near the beginning of the worksite and well ahead of the worksite for alerting approaching traffic from both directions. Small markers shall be placed along newly painted lines or freshly placed raised markers to control traffic and prevent damage to newly painted surfaces or displacement of raised pavement markers. Painting equipment shall be marked with large warning signs indicating slow-moving painting equipment in operation.

1.5 MAINTENANCE OF TRAFFIC

1.5.1 Roads, Streets, and Parking Areas

When traffic must be rerouted or controlled to accomplish the work, the necessary warning signs, flagpersons, and related equipment for the safe passage of vehicles shall be provided.

1.6 WEATHER LIMITATIONS FOR REMOVAL

Pavement surface shall be free of snow, ice, or slush. Surface temperature shall be at least 40 degrees F and rising at the beginning of operations,

except those involving shot or sand blasting. Operation shall cease during thunderstorms. Operation shall cease during rainfall, except for waterblasting and removal of previously applied chemicals. Waterblasting shall cease where surface water accumulation alters the effectiveness of material removal.

PART 2 PRODUCTS

2.1 THERMOPLASTIC COMPOUNDS

The thermoplastic reflectorized pavement marking compound shall be extruded or sprayed in a molten state onto a primed pavement surface. Following a surface application of glass beads and upon cooling to normal pavement temperatures, the marking shall be an adherent reflectorized strip of the specified thickness and width that is capable of resisting deformation by traffic.

2.1.1 Composition Requirements

The binder component shall be formulated as a hydrocarbon resin. The pigment, beads and filler shall be uniformly dispersed in the binder resin. The thermoplastic composition shall be free from all skins, dirt, and foreign objects and shall comply with the following requirements:

	Percent by Weight	
Component	White	Yellow
Binder	17 min.	17 min.
Titanium dioxide	10 min.	-
Glass beads,	20 min.	20 min.
Calcium carbonate & inert fillers	49 max.	*
Yellow pigments	-	*

*Amount and type of yellow pigment, calcium carbonate and inert fillers shall be at the option of the manufacturer, providing the other composition requirements of this specification are met.

2.1.2 Physical Properties

2.1.2.1 Color

The color shall be as indicated.

2.1.2.2 Drying Time

When installed at 70 degrees F and in thicknesses between 1/8 and 3/16 inch, the composition shall be completely solid and shall show no damaging effect from traffic after curing 15 minutes.

2.1.2.3 Softening Point

The composition shall have a softening point of not less than 194 degrees F when tested in accordance with ASTM E 28.

2.1.2.4 Specific Gravity

The specific gravity of the composition shall be between 1.9 and 2.2 as

determined in accordance with ASTM D 792.

2.1.3 Asphalt Concrete Primer

The primer for asphalt concrete pavements shall be a thermosetting adhesive with a solids content of pigment reinforced synthetic rubber and synthetic plastic resin dissolved and/or dispersed in a volatile organic compound (VOC). Solids content shall not be less than 10 percent by weight at 70 degrees F and 60 percent relative humidity. A wet film thickness of 0.005 inch plus or minus 0.001 inch, shall dry to a tack-free condition in less than 5 minutes.

2.1.4 Portland Cement Concrete Primer

The primer for Portland cement concrete pavements shall be an epoxy resin primer. The primer shall be of the type recommended by the manufacturer of the thermoplastic composition. Epoxy primers recommended by the manufacturer shall be approved by the Contracting Officer prior to use. Requests for approval shall be accompanied with technical data, instructions for use, and a 1 quart sample of the primer material.

2.2 PREFORMED TAPE

The preformed tape shall be an adherent reflectorized strip in accordance with ASTM D 4505 Type I or IV, Class optional.

2.3 SAMPLING AND TESTING

Materials proposed for use shall be stored on the project site in sealed and labeled containers, or segregated at source of supply, sufficiently in advance of needs to allow 60 days for testing. Upon notification by the Contractor that the material is at the site or source of supply, a sample shall be taken by random selection from sealed containers by the Contractor in the presence of a representative of the Contracting Officer. Samples shall be clearly identified by designated name, specification number, batch number, manufacturer's formulation number, project contract number, intended use, and quantity involved. Testing shall be performed in an approved independent laboratory. If materials are approved based on reports furnished by the Contractor, samples will be retained by the Government for possible future testing should the material appear defective during or after application.

PART 3 EXECUTION

3.1 SURFACE PREPARATION

Surfaces to be marked shall be thoroughly cleaned before application of the pavement marking material. Dust, dirt, and other granular surface deposits shall be removed by sweeping, blowing with compressed air, rinsing with water or a combination of these methods as required. Rubber deposits, surface laitance, existing paint markings, and other coatings adhering to the pavement shall be completely removed with scrapers, wire brushes, sandblasting, approved chemicals, or mechanical abrasion as directed. Areas of old pavement affected with oil or grease shall be scrubbed with several applications of trisodium phosphate solution or other approved detergent or degreaser, and rinsed thoroughly after each application. After cleaning, oil-soaked areas shall be sealed with cut shellac to prevent bleeding through the new paint. Pavement surfaces shall be allowed to dry, when water is used for cleaning, prior to striping or marking. Surfaces shall be recleaned, when work has been stopped due to rain.

3.1.1 Cleaning Existing Pavement Markings

In general, markings shall not be placed over existing pavement marking patterns. Existing pavement markings, which are in good condition but

interfere or conflict with the newly applied marking patterns, shall be removed. Deteriorated or obscured markings that are not misleading or confusing or interfere with the adhesion of the new marking material do not require removal. New preformed and thermoplastic pavement markings shall not be applied over existing preformed or thermoplastic markings. Whenever grinding, scraping, sandblasting or other operations are performed the work must be conducted in such a manner that the finished pavement surface is not damaged or left in a pattern that is misleading or confusing. When these operations are completed the pavement surface shall be blown off with compressed air to remove residue and debris resulting from the cleaning work.

3.1.2 Cleaning Concrete Curing Compounds

On new Portland cement concrete pavements, cleaning operations shall not begin until a minimum of 30 days after the placement of concrete. All new concrete pavements shall be cleaned by either sandblasting or water blasting. When water blasting is performed, thermoplastic and preformed markings shall be applied no sooner than 24 hours after the blasting has been completed. The extent of the blasting work shall be to clean and prepare the concrete surface as follows:

a. There is no visible evidence of curing compound on the peaks of the textured concrete surface.

b. There are no heavy puddled deposits of curing compound in the valleys of the textured concrete surface.

c. All remaining curing compound is intact; all loose and flaking material is removed.

d. The peaks of the textured pavement surface are rounded in profile and free of sharp edges and irregularities.

e. The surface to be marked is dry.

3.2 APPLICATION

All pavement markings and patterns shall be placed as shown on the plans.

3.2.1 Thermoplastic Compounds

Thermoplastic pavement markings shall be placed upon dry pavement; surface dry only will not be considered an acceptable condition. At the time of installation, the pavement surface temperature shall be a minimum of 40 degrees F and rising. Thermoplastics, as placed, shall be free from dirt or tint.

3.2.1.1 Longitudinal Markings

All centerline, skipline, edgeline, and other longitudinal type markings shall be applied with a mobile applicator. All special markings, crosswalks, stop bars, legends, arrows, and similar patterns shall be placed with a portable applicator, using the extrusion method.

3.2.1.2 Primer

After surface preparation has been completed the asphalt and/or concrete pavement surface shall be primed. The primer shall be applied with spray equipment. Primer materials shall be allowed to "set-up" prior to applying the thermoplastic composition. The asphalt concrete primer shall be allowed to dry to a tack-free condition, usually occurring in less than 10 minutes. The Portland cement concrete primer shall be allowed to dry in accordance with the thermoplastic manufacturer's recommendations. To shorten the curing time of the epoxy resins an infrared heating device may be used on the concrete primer.

a. Asphalt Concrete Primer: Primer shall be applied to all asphalt concrete pavements at a wet film thickness of 0.005 inch, plus or minus 0.001 inch (265-400 square feet per gallon).

b. Portland Cement Concrete Primer: Primer shall be applied to all concrete pavements (including concrete bridge decks) at a wet film thickness of between 0.04 to 0.05 inch (320-400 square feet per gallon).

3.2.1.3 Markings

After the primer has "set-up", the thermoplastic shall be applied at temperatures no lower than 375 degrees F nor higher than 425 degrees F at the point of deposition. Immediately after installation of the marking, drop-on glass spheres shall be mechanically applied so that the spheres are held by and imbedded in the surface of the molten material.

a. Extruded Markings: All extruded thermoplastic markings shall be applied at the specified width and at a thickness of not less than 0.125 inch nor more than 0.190 inch.

b. Sprayed Markings: All sprayed thermoplastic markings shall be applied at the specified width and the thicknesses designated in the contract plans. If the plans do not specify a thickness, centerline markings shall be applied at a wet thickness of 0.090 inch, plus or minus 0.005 inch, and edgeline markings at a wet thickness of 0.060 inch, plus or minus 0.005 inch.

c. Reflective Glass Spheres: Immediately following application, reflective glass spheres shall be dropped onto the molten thermoplastic marking at the rate of 1 pound per 20 square feet of compound.

3.2.2 Preformed Tape

The pavement surface temperature shall be a minimum of 60 degrees F and the ambient temperature shall be a minimum of 60 degrees F and rising. The preformed markings shall be placed in accordance with the manufacturer's written instructions.

-- End of Section --

SECTION TABLE OF CONTENTS

DIVISION 02 - SITE WORK

SECTION 02770A

CONCRETE SIDEWALKS AND CURBS AND GUTTERS

03/98

PART 1 GENERAL

1.1 REFERENCES
1.2 SUBMITTALS
1.3 WEATHER LIMITATIONS
1.3.1 Placing During Cold Weather
1.3.2 Placing During Warm Weather
1.4 PLANT, EQUIPMENT, MACHINES, AND TOOLS
1.4.1 General Requirements
1.4.2 Slip Form Equipment

PART 2 PRODUCTS

2.1 CONCRETE
2.1.1 Air Content
2.1.2 Slump
2.1.3 Reinforcement Steel
2.2 CONCRETE CURING MATERIALS
2.2.1 Impervious Sheet Materials
2.2.2 Burlap
2.2.3 White Pigmented Membrane-Forming Curing Compound
2.3 CONCRETE PROTECTION MATERIALS
2.4 JOINT FILLER STRIPS
2.4.1 Contraction Joint Filler for Curb and Gutter
2.4.2 Expansion Joint Filler, Premolded
2.5 JOINT SEALANTS
2.5.1 Joint Sealant, Cold-Applied
2.6 FORM WORK
2.6.1 Sidewalk Forms
2.6.2 Curb and Gutter Forms

PART 3 EXECUTION

3.1 SUBGRADE PREPARATION
3.1.1 Sidewalk Subgrade
3.1.2 Curb and Gutter Subgrade
3.1.3 Maintenance of Subgrade
3.2 FORM SETTING
3.2.1 Sidewalks
3.2.2 Curbs and Gutters
3.3 SIDEWALK CONCRETE PLACEMENT AND FINISHING
3.3.1 Formed Sidewalks
3.3.2 Concrete Finishing
3.3.3 Edge and Joint Finishing
3.3.4 Surface and Thickness Tolerances
3.4 CURB AND GUTTER CONCRETE PLACEMENT AND FINISHING
3.4.1 Formed Curb and Gutter
3.4.2 Curb and Gutter Finishing
3.4.3 Concrete Finishing
3.4.4 Joint Finishing

3.4.5 Surface and Thickness Tolerances
3.5 SIDEWALK JOINTS
3.5.1 Sidewalk Contraction Joints
3.5.2 Sidewalk Expansion Joints
3.5.3 Reinforcement Steel Placement
3.6 CURB AND GUTTER JOINTS
3.6.1 Contraction Joints
3.6.2 Expansion Joints
3.7 CURING AND PROTECTION
3.7.1 General Requirements
3.7.1.1 Mat Method
3.7.1.2 Impervious Sheeting Method
3.7.1.3 Membrane Curing Method
3.7.2 Backfilling
3.7.3 Protection
3.7.4 Protective Coating
3.7.4.1 Application
3.7.4.2 Precautions
3.8 FIELD QUALITY CONTROL
3.8.1 General Requirements
3.8.2 Concrete Testing
3.8.2.1 Strength Testing
3.8.2.2 Air Content
3.8.2.3 Slump Test
3.8.3 Thickness Evaluation
3.8.4 Surface Evaluation
3.9 SURFACE DEFICIENCIES AND CORRECTIONS
3.9.1 Thickness Deficiency
3.9.2 High Areas
3.9.3 Appearance

-- End of Section Table of Contents --

SECTION 02770A

CONCRETE SIDEWALKS AND CURBS AND GUTTERS
03/98

PART 1 GENERAL

1.1 REFERENCES

The publications listed below form a part of this specification to the extent referenced. The publications are referred to in the text by basic designation only.

AMERICAN ASSOCIATION OF STATE HIGHWAY AND TRANSPORTATION OFFICIALS (AASHTO)

AASHTO M 182	(1991) Burlap Cloth Made from Jute or Kenaf

AMERICAN SOCIETY FOR TESTING AND MATERIALS (ASTM)

ASTM A 185	(1997) Steel Welded Wire Fabric, Plain, for Concrete Reinforcement
ASTM A 615/A 615M	(1996a) Deformed and Plain Billet-Steel Bars for Concrete Reinforcement
ASTM A 616/A 616M	(1996a) Rail-Steel Deformed and Plain Bars for Concrete Reinforcement
ASTM A 617/A 617M	(1996a) Axle-Steel Deformed and Plain Bars for Concrete Reinforcement
ASTM C 31/C 31M	(1996) Making and Curing Concrete Test Specimens in the Field
ASTM C 143	(1990a) Slump of Hydraulic Cement Concrete
ASTM C 171	(1997) Sheet Materials for Curing Concrete
ASTM C 172	(1997) Sampling Freshly Mixed Concrete
ASTM C 173	(1996) Air Content of Freshly Mixed Concrete by the Volumetric Method
ASTM C 231	(1997) Air Content of Freshly Mixed Concrete by the Pressure Method
ASTM C 309	(1997) Liquid Membrane-Forming Compounds for Curing Concrete
ASTM C 920	(1995) Elastomeric Joint Sealants
ASTM D 1751	(1983; R 1991) Preformed Expansion Joint Filler for Concrete Paving and Structural Construction (Nonextruding and Resilient Bituminous Types)
ASTM D 1752	(1984; R 1996) Preformed Sponge Rubber and Cork Expansion Joint Fillers for Concrete Paving and Structural Construction

1.2 SUBMITTALS

Government approval is required for submittals with a "G" designation; submittals not having a "G" designation are for information only. When used, a designation following the "G" designation identifies the office that will review the submittal for the Government. The following shall be submitted in accordance with Section 01330 SUBMITTAL PROCEDURES:

SD-03 Product Data

Concrete;

Copies of certified delivery tickets for all concrete used in the construction.

SD-06 Test Reports

Field Quality Control;

Copies of all test reports within 24 hours of completion of the test.

1.3 WEATHER LIMITATIONS

1.3.1 Placing During Cold Weather

Concrete placement shall not take place when the air temperature reaches 40 degrees F and is falling, or is already below that point. Placement may begin when the air temperature reaches 35 degrees F and is rising, or is already above 40 degrees F. Provisions shall be made to protect the concrete from freezing during the specified curing period. If necessary to place concrete when the temperature of the air, aggregates, or water is below 35 degrees F, placement and protection shall be approved in writing. Approval will be contingent upon full conformance with the following provisions. The underlying material shall be prepared and protected so that it is entirely free of frost when the concrete is deposited. Mixing water and aggregates shall be heated as necessary to result in the temperature of the in-place concrete being between 50 and 85 degrees F. Methods and equipment for heating shall be approved. The aggregates shall be free of ice, snow, and frozen lumps before entering the mixer. Covering and other means shall be provided for maintaining the concrete at a temperature of at least 50 degrees F for not less than 72 hours after placing, and at a temperature above freezing for the remainder of the curing period.

1.3.2 Placing During Warm Weather

The temperature of the concrete as placed shall not exceed 85 degrees F except where an approved retarder is used. The mixing water and/or aggregates shall be cooled, if necessary, to maintain a satisfactory placing temperature. The placing temperature shall not exceed 95 degrees F at any time.

1.4 PLANT, EQUIPMENT, MACHINES, AND TOOLS

1.4.1 General Requirements

Plant, equipment, machines, and tools used in the work shall be subject to approval and shall be maintained in a satisfactory working condition at all times. The equipment shall have the capability of producing the required product, meeting grade controls, thickness control and smoothness requirements as specified. Use of the equipment shall be discontinued if it produces unsatisfactory results. The Contracting Officer shall have access at all times to the plant and equipment to ensure proper operation and compliance with specifications.

1.4.2 Slip Form Equipment

Slip form paver or curb forming machine, will be approved based on trial use on the job and shall be self-propelled, automatically controlled, crawler mounted, and capable of spreading, consolidating, and shaping the plastic concrete to the desired cross section in 1 pass.

PART 2 PRODUCTS

2.1 CONCRETE

Concrete shall conform to the applicable requirements of Section 03300 CAST-IN-PLACE STRUCTURAL CONCRETE except as otherwise specified. Concrete shall have a minimum compressive strength of 3500 psi at 28 days. Maximum size of aggregate shall be 1-1/2 inches.

2.1.1 Air Content

Mixtures shall have air content by volume of concrete of 5 to 7 percent, based on measurements made immediately after discharge from the mixer.

2.1.2 Slump

The concrete slump shall be 2 inches plus or minus 1 inch where determined in accordance with ASTM C 143.

2.1.3 Reinforcement Steel

Reinforcement bars shall conform to ASTM A 615/A 615M, ASTM A 616/A 616M, or ASTM A 617/A 617M. Wire mesh reinforcement shall conform to ASTM A 185.

2.2 CONCRETE CURING MATERIALS

2.2.1 Impervious Sheet Materials

Impervious sheet materials shall conform to ASTM C 171, type optional, except that polyethylene film, if used, shall be white opaque.

2.2.2 Burlap

Burlap shall conform to AASHTO M 182.

2.2.3 White Pigmented Membrane-Forming Curing Compound

White pigmented membrane-forming curing compound shall conform to ASTM C 309, Type 2.

2.3 CONCRETE PROTECTION MATERIALS

Concrete protection materials shall be a linseed oil mixture of equal parts, by volume, of linseed oil and either mineral spirits, naphtha, or turpentine. At the option of the contractor, commercially prepared linseed oil mixtures, formulated specifically for application to concrete to provide protection against the action of deicing chemicals may be used, except that emulsified mixtures are not acceptable.

2.4 JOINT FILLER STRIPS

2.4.1 Contraction Joint Filler for Curb and Gutter

Contraction joint filler for curb and gutter shall consist of hard-pressed fiberboard.

2.4.2 Expansion Joint Filler, Premolded

Expansion joint filler, premolded, shall conform to ASTM D 1751 or ASTM D 1752, 3/8 inch thick, unless otherwise indicated.

2.5 JOINT SEALANTS

2.5.1 Joint Sealant, Cold-Applied

Joint sealant, cold-applied shall conform to ASTM C 920.

2.6 FORM WORK

Form work shall be designed and constructed to ensure that the finished concrete will conform accurately to the indicated dimensions, lines, and elevations, and within the tolerances specified. Forms shall be of wood or steel, straight, of sufficient strength to resist springing during depositing and consolidating concrete. Wood forms shall be surfaced plank, 2 inches nominal thickness, straight and free from warp, twist, loose knots, splits or other defects. Wood forms shall have a nominal length of 10 feet. Radius bends may be formed with 3/4 inch boards, laminated to the required thickness. Steel forms shall be channel-formed sections with a flat top surface and with welded braces at each end and at not less than two intermediate points. Ends of steel forms shall be interlocking and self-aligning. Steel forms shall include flexible forms for radius forming, corner forms, form spreaders, and fillers. Steel forms shall have a nominal length of 10 feet with a minimum of 3 welded stake pockets per form. Stake pins shall be solid steel rods with chamfered heads and pointed tips designed for use with steel forms.

2.6.1 Sidewalk Forms

Sidewalk forms shall be of a height equal to the full depth of the finished sidewalk.

2.6.2 Curb and Gutter Forms

Curb and gutter outside forms shall have a height equal to the full depth of the curb or gutter. The inside form of curb shall have batter as indicated and shall be securely fastened to and supported by the outside form. Rigid forms shall be provided for curb returns, except that benders or thin plank forms may be used for curb or curb returns with a radius of 10 feet or more, where grade changes occur in the return, or where the central angle is such that a rigid form with a central angle of 90 degrees cannot be used. Back forms for curb returns may be made of 1-1/2 inch benders, for the full height of the curb, cleated together. In lieu of inside forms for curbs, a curb "mule" may be used for forming and finishing this surface, provided the results are approved.

PART 3 EXECUTION

3.1 SUBGRADE PREPARATION

The subgrade shall be constructed to the specified grade and cross section prior to concrete placement. Subgrade shall be placed and compacted in conformance with Sections 02300a EARTHWORK and Section 02547 BITUMINOUS PAVEMENT WITH BASE COURSE.

3.1.1 Sidewalk Subgrade

The subgrade shall be tested for grade and cross section with a template extending the full width of the sidewalk and supported between side forms.

3.1.2 Curb and Gutter Subgrade

The subgrade shall be tested for grade and cross section by means of a template extending the full width of the curb and gutter. The subgrade shall be of materials equal in bearing quality to the subgrade under the adjacent pavement.

3.1.3 Maintenance of Subgrade

The subgrade shall be maintained in a smooth, compacted condition in conformity with the required section and established grade until the concrete is placed. The subgrade shall be in a moist condition when concrete is placed. The subgrade shall be prepared and protected to produce a subgrade free from frost when the concrete is deposited.

3.2 FORM SETTING

Forms shall be set to the indicated alignment, grade and dimensions. Forms shall be held rigidly in place by a minimum of 3 stakes per form placed at intervals not to exceed 4 feet. Corners, deep sections, and radius bends shall have additional stakes and braces, as required. Clamps, spreaders, and braces shall be used where required to ensure rigidity in the forms. Forms shall be removed without injuring the concrete. Bars or heavy tools shall not be used against the concrete in removing the forms. Any concrete found defective after form removal shall be promptly and satisfactorily repaired. Forms shall be cleaned and coated with form oil each time before concrete is placed. Wood forms may, instead, be thoroughly wetted with water before concrete is placed, except that with probable freezing temperatures, oiling is mandatory.

3.2.1 Sidewalks

Forms for sidewalks shall be set with the upper edge true to line and grade with an allowable tolerance of 1/8 inch in any 10 foot long section. After forms are set, grade and alignment shall be checked with a 10 foot straightedge. Forms shall have a transverse slope as indicated with the low side adjacent to the roadway. Side forms shall not be removed for 12 hours after finishing has been completed.

3.2.2 Curbs and Gutters

The forms of the front of the curb shall be removed not less than 2 hours nor more than 6 hours after the concrete has been placed. Forms back of curb shall remain in place until the face and top of the curb have been finished, as specified for concrete finishing. Gutter forms shall not be removed while the concrete is sufficiently plastic to slump in any direction.

3.3 SIDEWALK CONCRETE PLACEMENT AND FINISHING

3.3.1 Formed Sidewalks

Concrete shall be placed in the forms in one layer. When consolidated and finished, the sidewalks shall be of the thickness indicated. After concrete has been placed in the forms, a strike-off guided by side forms shall be used to bring the surface to proper section to be compacted. The concrete shall be consolidated with an approved vibrator, and the surface shall be finished to grade with a strike off.

3.3.2 Concrete Finishing

After straightedging, when most of the water sheen has disappeared, and just before the concrete hardens, the surface shall be finished with a wood float or darby to a smooth and uniformly fine granular or sandy texture free of waves, irregularities, or tool marks. A scored surface shall be produced by brooming with a fiber-bristle brush in a direction transverse to that of the traffic, followed by edging.

3.3.3 Edge and Joint Finishing

All slab edges, including those at formed joints, shall be finished with an edger having a radius of 1/8 inch. Transverse joint shall be edged before brooming, and the brooming shall eliminate the flat surface left by the surface face of the edger. Corners and edges which have crumbled and areas which lack sufficient mortar for proper finishing shall be cleaned and filled solidly with a properly proportioned mortar mixture and then finished.

3.3.4 Surface and Thickness Tolerances

Finished surfaces shall not vary more than 5/16 inch from the testing edge of a 10-foot straightedge. Permissible deficiency in section thickness will be up to 1/4 inch.

3.4 CURB AND GUTTER CONCRETE PLACEMENT AND FINISHING

3.4.1 Formed Curb and Gutter

Concrete shall be placed to the section required in a single lift. Consolidation shall be achieved by using approved mechanical vibrators. Curve shaped gutters shall be finished with a standard curb "mule".

3.4.2 Curb and Gutter Finishing

Approved slipformed curb and gutter machines may be used in lieu of hand placement.

3.4.3 Concrete Finishing

Exposed surfaces shall be floated and finished with a smooth wood float until true to grade and section and uniform in texture. Floated surfaces shall then be brushed with a fine-hair brush with longitudinal strokes. The edges of the gutter and top of the curb shall be rounded with an edging tool to a radius of 1/2 inch. Immediately after removing the front curb form, the face of the curb shall be rubbed with a wood or concrete rubbing block and water until blemishes, form marks, and tool marks have been removed. The front curb surface, while still wet, shall be brushed in the same manner as the gutter and curb top. The top surface of gutter and entrance shall be finished to grade with a wood float.

3.4.4 Joint Finishing

Curb edges at formed joints shall be finished as indicated.

3.4.5 Surface and Thickness Tolerances

Finished surfaces shall not vary more than 1/4 inch from the testing edge of a 10-foot straightedge. Permissible deficiency in section thickness will be up to 1/4 inch.

3.5 SIDEWALK JOINTS

Sidewalk joints shall be constructed to divide the surface into rectangular areas. Transverse contraction joints shall be spaced at a distance equal to the sidewalk width or 5 feet on centers, whichever is less, and shall be continuous across the slab. Longitudinal contraction joints shall be constructed along the centerline of all sidewalks 10 feet or more in width. Transverse expansion joints shall be installed at sidewalk returns and opposite expansion joints in adjoining curbs. Where the sidewalk is not in contact with the curb, transverse expansion joints shall be installed as indicated. Expansion joints shall be formed about structures and features which project through or into the sidewalk pavement, using joint filler of the type, thickness, and width indicated.

3.5.1 Sidewalk Contraction Joints

The contraction joints shall be formed in the fresh concrete by cutting a groove in the top portion of the slab to a depth of at least one-fourth of the sidewalk slab thickness, using a jointer to cut the groove, or by sawing a groove in the hardened concrete with a power-driven saw, unless otherwise approved. Sawed joints shall be constructed by sawing a groove in the concrete with a 1/8 inch blade to the depth indicated. An ample supply of saw blades shall be available on the job before concrete placement is started, and at least one standby sawing unit in good working order shall be available at the jobsite at all times during the sawing operations.

3.5.2 Sidewalk Expansion Joints

Expansion joints shall be formed with 1/2 inch joint filler strips. Joint filler shall be placed with top edge 1/4 inch below the surface and shall be held in place with steel pins or other devices to prevent warping of the filler during floating and finishing. Immediately after finishing operations are completed, joint edges shall be rounded with an edging tool having a radius of 1/8 inch, and concrete over the joint filler shall be removed. At the end of the curing period, expansion joints shall be cleaned and filled with joint sealant. The joint opening shall be thoroughly cleaned before the sealing material is placed. Sealing material shall not be spilled on exposed surfaces of the concrete. Concrete at the joint shall be surface dry and atmospheric and concrete temperatures shall be above 50 degrees F at the time of application of joint sealing material. Excess material on exposed surfaces of the concrete shall be removed immediately and concrete surfaces cleaned.

3.5.3 Reinforcement Steel Placement

Reinforcement steel shall be accurately and securely fastened in place with suitable supports and ties before the concrete is placed.

3.6 CURB AND GUTTER JOINTS

Curb and gutter joints shall be constructed at right angles to the line of curb and gutter.

3.6.1 Contraction Joints

Contraction joints shall be constructed directly opposite contraction joints in abutting portland cement concrete pavements and spaced so that monolithic sections between curb returns will not be less than 5 feet nor greater than 15 feet in length. Contraction joints shall be constructed by means of 1/8 inch thick separators and of a section conforming to the cross section of the curb and gutter. Separators shall be removed as soon as practicable after concrete has set sufficiently to preserve the width and shape of the joint and prior to finishing.

3.6.2 Expansion Joints

Expansion joints shall be formed by means of preformed expansion joint filler material cut and shaped to the cross section of curb and gutter. Expansion joints shall be provided in curb and gutter directly opposite expansion joints of abutting portland cement concrete pavement, and shall be of the same type and thickness as joints in the pavement. Where curb and gutter do not abut portland cement concrete pavement, expansion joints at least 1/2 inch in width shall be provided at intervals not exceeding 30 feet. Expansion joints shall be sealed immediately following curing of the concrete or as soon thereafter as weather conditions permit. Expansion joints and the top 1 inch depth of curb and gutter contraction-joints shall be sealed with joint sealant. The joint opening shall be thoroughly cleaned before the sealing material is placed. Sealing material

shall not be spilled on exposed surfaces of the concrete. Concrete at the joint shall be surface dry and atmospheric and concrete temperatures shall be above 50 degrees F at the time of application of joint sealing material. Excess material on exposed surfaces of the concrete shall be removed immediately and concrete surfaces cleaned.

3.7 CURING AND PROTECTION

3.7.1 General Requirements

Concrete shall be protected against loss of moisture and rapid temperature changes for at least 7 days from the beginning of the curing operation. Unhardened concrete shall be protected from rain and flowing water. All equipment needed for adequate curing and protection of the concrete shall be on hand and ready for use before actual concrete placement begins. Protection shall be provided as necessary to prevent cracking of the pavement due to temperature changes during the curing period.

3.7.1.1 Mat Method

The entire exposed surface shall be covered with 2 or more layers of burlap. Mats shall overlap each other at least 6 inches.The mat shall be thoroughly wetted with water prior to placing on concrete surface and shall be kept continuously in a saturated condition and in intimate contact with concrete for not less than 7 days.

3.7.1.2 Impervious Sheeting Method

The entire exposed surface shall be wetted with a fine spray of water and then covered with impervious sheeting material. Sheets shall be laid directly on the concrete surface with the light-colored side up and overlapped 12 inches when a continuous sheet is not used. The curing medium shall not be less than 18-inches wider than the concrete surface to be cured, and shall be securely weighted down by heavy wood planks, or a bank of moist earth placed along edges and laps in the sheets. Sheets shall be satisfactorily repaired or replaced if torn or otherwise damaged during curing. The curing medium shall remain on the concrete surface to be cured for not less than 7 days.

3.7.1.3 Membrane Curing Method

A uniform coating of white-pigmented membrane-curing compound shall be applied to the entire exposed surface of the concrete as soon after finishing as the free water has disappeared from the finished surface. Formed surfaces shall be coated immediately after the forms are removed and in no case longer than 1 hour after the removal of forms. Concrete shall not be allowed to dry before the application of the membrane. If any drying has occurred, the surface of the concrete shall be moistened with a fine spray of water and the curing compound applied as soon as the free water disappears. Curing compound shall be applied in two coats by hand-operated pressure sprayers at a coverage of approximately 200 square feet per gallon for the total of both coats. The second coat shall be applied in a direction approximately at right angles to the direction of application of the first coat. The compound shall form a uniform, continuous, coherent film that will not check, crack, or peel and shall be free from pinholes or other imperfections. If pinholes, abrasion, or other discontinuities exist, an additional coat shall be applied to the affected areas within 30 minutes. Concrete surfaces that are subjected to heavy rainfall within 3 hours after the curing compound has been applied shall be resprayed by the method and at the coverage specified above. Areas where the curing compound is damaged by subsequent construction operations within the curing period shall be resprayed. Necessary precautions shall be taken to insure that the concrete is properly cured at sawed joints, and that no curing compound enters the joints. The top of the joint opening and the joint groove at exposed edges shall be tightly sealed before the concrete in the region of the joint is

resprayed with curing compound. The method used for sealing the joint groove shall prevent loss of moisture from the joint during the entire specified curing period. Approved standby facilities for curing concrete pavement shall be provided at a location accessible to the jobsite for use in the event of mechanical failure of the spraying equipment or other conditions that might prevent correct application of the membrane-curing compound at the proper time. Concrete surfaces to which membrane-curing compounds have been applied shall be adequately protected during the entire curing period from pedestrian and vehicular traffic, except as required for joint-sawing operations and surface tests, and from any other possible damage to the continuity of the membrane.

3.7.2 Backfilling

After curing, debris shall be removed and the area adjoining the concrete shall be backfilled, graded, and compacted to conform to the surrounding area in accordance with lines and grades indicated.

3.7.3 Protection

Completed concrete shall be protected from damage until accepted. The Contractor shall repair damaged concrete and clean concrete discolored during construction. Concrete that is damaged shall be removed and reconstructed for the entire length between regularly scheduled joints. Refinishing the damaged portion will not be acceptable. Removed damaged portions shall be disposed of as directed.

3.7.4 Protective Coating

Protective coating of linseed oil mixture shall be applied to the exposed-to-view concrete surface.

3.7.4.1 Application

Curing and backfilling operation shall be completed prior to applying two coats of protective coating. Concrete shall be surface dry and clean before each application. Coverage shall be by spray application at not more than 50 square yards per gallon for first application and not more than 70 square yards per gallon for second application, except that the number of applications and coverage for each application for commercially prepared mixture shall be in accordance with the manufacturer's instructions. Coated surfaces shall be protected from vehicular and pedestrian traffic until dry.

3.7.4.2 Precautions

Protective coating shall not be heated by direct application of flame or electrical heaters and shall be protected from exposure to open flame, sparks, and fire adjacent to open containers or applicators. Material shall not be applied at ambient or material temperatures lower than 50 degrees F.

3.8 FIELD QUALITY CONTROL

3.8.1 General Requirements

The Contractor shall perform the inspection and tests described and meet the specified requirements for inspection details and frequency of testing. Based upon the results of these inspections and tests, the Contractor shall take the action and submit reports as required below, and any additional tests to insure that the requirements of these specifications are met.

3.8.2 Concrete Testing

3.8.2.1 Strength Testing

The Contractor shall provide molded concrete specimens for strength tests. Samples of concrete placed each day shall be taken not less than once a day nor less than once for every 250 cubic yards of concrete. The samples for strength tests shall be taken in accordance with ASTM C 172. Cylinders for acceptance shall be molded in conformance with ASTM C 31/C 31M by an approved testing laboratory. Each strength test result shall be the average of 2 test cylinders from the same concrete sample tested at 28 days, unless otherwise specified or approved. Concrete specified on the basis of compressive strength will be considered satisfactory if the averages of all sets of three consecutive strength test results equal or exceed the specified strength, and no individual strength test result falls below the specified strength by more than 500 psi.

3.8.2.2 Air Content

Air content shall be determined in accordance with ASTM C 173 or ASTM C 231. ASTM C 231 shall be used with concretes and mortars made with relatively dense natural aggregates. Two tests for air content shall be made on randomly selected batches of each class of concrete placed during each shift. Additional tests shall be made when excessive variation in concrete workability is reported by the placing foreman or the Government inspector. If results are out of tolerance, the placing foreman shall be notified and he shall take appropriate action to have the air content corrected at the plant. Additional tests for air content will be performed on each truckload of material until such time as the air content is within the tolerance specified.

3.8.2.3 Slump Test

Two slump tests shall be made on randomly selected batches of each class of concrete for every 250 cubic yards, or fraction thereof, of concrete placed during each shift. Additional tests shall be performed when excessive variation in the workability of the concrete is noted or when excessive crumbling or slumping is noted along the edges of slip-formed concrete.

3.8.3 Thickness Evaluation

The anticipated thickness of the concrete shall be determined prior to placement by passing a template through the formed section or by measuring the depth of opening of the extrusion template of the curb forming machine. If a slip form paver is used for sidewalk placement, the subgrade shall be true to grade prior to concrete placement and the thickness will be determined by measuring each edge of the completed slab.

3.8.4 Surface Evaluation

The finished surface of each category of the completed work shall be uniform in color and free of blemishes and form or tool marks.

3.9 SURFACE DEFICIENCIES AND CORRECTIONS

3.9.1 Thickness Deficiency

When measurements indicate that the completed concrete section is deficient in thickness by more than 1/4 inch the deficient section will be removed, between regularly scheduled joints, and replaced.

3.9.2 High Areas

In areas not meeting surface smoothness and plan grade requirements, high areas shall be reduced either by rubbing the freshly finished concrete with carborundum brick and water when the concrete is less than 36 hours old or by grinding the hardened concrete with an approved surface grinding machine after the concrete is 36 hours old or more. The area corrected by grinding the surface of the hardened concrete shall not exceed 5 percent of the area of any

integral slab, and the depth of grinding shall not exceed 1/4 inch. Pavement areas requiring grade or surface smoothness corrections in excess of the limits specified above shall be removed and replaced.

3.9.3 Appearance

Exposed surfaces of the finished work will be inspected by the Government and any deficiencies in appearance will be identified. Areas which exhibit excessive cracking, discoloration, form marks, or tool marks or which are otherwise inconsistent with the overall appearances of the work shall be removed and replaced.

-- End of Section --

SECTION TABLE OF CONTENTS

DIVISION 02 - SITE WORK

SECTION 02821A

FENCING

02/02

PART 1 GENERAL

1.1 REFERENCES
1.2 SUBMITTALS

PART 2 PRODUCTS

2.1 FENCE FABRIC
2.1.1 Chain Link Fence Fabric
2.2 GATES
2.3 POSTS
2.3.1 Metal Posts for Chain Link Fence
2.4 BRACES AND RAILS
2.5 WIRE
2.5.1 Tension Wire
2.6 ACCESSORIES
2.7 CONCRETE

PART 3 EXECUTION

3.1 INSTALLATION
3.2 EXCAVATION
3.3 POST INSTALLATION
3.3.1 Posts for Chain Link Fence
3.4 RAILS
3.4.1 Top Rail
3.5 BRACES AND TRUSS RODS
3.6 TENSION WIRES
3.7 CHAIN LINK FABRIC
3.8 BARBED WIRE SUPPORTING ARMS AND BARBED WIRE
3.8.1 General Requirements
3.9 GATE INSTALLATION
3.10 GROUNDING

-- End of Section Table of Contents --

SECTION 02821A

FENCING
02/02

PART 1 GENERAL

1.1 REFERENCES

The publications listed below form a part of this specification to the extent referenced. The publications are referred to in the text by basic designation only.

AMERICAN SOCIETY FOR TESTING AND MATERIALS (ASTM)

ASTM A 121	(1999) Zinc-Coated (Galvanized) Steel Barbed Wire
ASTM A 153/A 153M	(2001) Zinc Coating (Hot-Dip) on Iron and Steel Hardware
ASTM A 392	(1996) Zinc-Coated Steel Chain-Link Fence Fabric
ASTM A 491	(1996) Aluminum-Coated Steel Chain-Link Fence Fabric
ASTM A 585	(1997) Aluminum-Coated Steel Barbed Wire
ASTM A 780	(2000) Repair of Damaged and Uncoated Areas of Hot-Dipped Galvanized Coatings
ASTM A 824	(1995) Metallic-Coated Steel Marcelled Tension Wire for Use With Chain Link Fence
ASTM C 94/C 94M	(2000e2) Ready-Mixed Concrete
ASTM F 1043	(2000) Strength and Protective Coatings on Metal Industrial Chain-Link Fence Framework
ASTM F 1083	(1997) Specification for Pipe, Steel, Hot-Dipped Zinc-Coated (Galvanized) Welded, for Fence Structures
ASTM F 1184	(1994) Industrial and Commercial Horizontal Slide Gates
ASTM F 626	(1996a) Fence Fittings
ASTM F 900	(1994) Industrial and Commercial Swing Gates

1.2 SUBMITTALS

Government approval is required for submittals with a "G" designation; submittals not having a "G" designation are for information only. When used, a designation following the "G" designation identifies the office that will review the submittal for the Government. The following shall be submitted in accordance with Section 01330 SUBMITTAL PROCEDURES:

SD-07 Certificates

Chain Link Fence; G-RE

Statement, signed by an official authorized to certify on behalf of the manufacturer, attesting that the chain link fence and component materials meet the specified requirements.

PART 2 PRODUCTS

2.1 FENCE FABRIC

Fence fabric shall conform to the following:

2.1.1 Chain Link Fence Fabric

ASTM A 392, Class 2, zinc-coated steel wire with minimum coating weight of 2.0 ounces of zinc per square foot of coated surface, or ASTM A 491, Type I, aluminum-coated steel wire. Fabric shall be fabricated of 9 gauge wire woven in 2 inch mesh. Fabric height shall be 7 feet. Fabric shall be twisted and barbed on the top selvage and knuckled on the bottom selvage.

2.2 GATES

ASTM F 900 and/or ASTM F 1184. Gate shall be the type and swing shown. Gate frames shall conform to strength and coating requirements of ASTM F 1083 for Group IA, steel pipe, with external coating Type A, nominal pipe size (NPS) 1-1/2. Gate frames shall conform to strength and coating requirements of ASTM F 1043, for Group IC, steel pipe with external coating Type A or Type B, nominal pipe size (NPS) 1-1/2. Gate fabric shall be as specified for chain link fabric. Gate leaves more than 8 feet wide shall have either intermediate members and diagonal truss rods or shall have tubular members as necessary to provide rigid construction, free from sag or twist. Gate leaves less than 8 feet wide shall have truss rods or intermediate braces. Gate fabric shall be attached to the gate frame by method standard with the manufacturer except that welding will not be permitted. Latches, hinges, stops, keepers, rollers, and other hardware items shall be furnished as required for the operation of the gate. Latches shall be arranged for padlocking so that the padlock will be accessible from both sides of the gate. Stops shall be provided for holding the gates in the open position. For high security applications, each end member of gate frames shall be extended sufficiently above the top member to carry three strands of barbed wire in horizontal alignment with barbed wire strands on the fence.

2.3 POSTS

2.3.1 Metal Posts for Chain Link Fence

ASTM F 1083, zinc-coated. Group IA, with external coating Type A steel pipe. Group IC steel pipe, zinc-coated with external coating Type A or Type B and Group II , roll-formed steel sections, shall meet the strength and coating requirements of ASTM F 1043. Group III, ASTM F 1043 steel H-section may be used for line posts in lieu of line post shapes specified for the other classes. Sizes shall be as shown on the drawings. Line posts and terminal (corner, gate, and pull) posts selected shall be of the same designation throughout the fence.

2.4 BRACES AND RAILS

ASTM F 1083, zinc-coated, Group IA, steel pipe, size NPS 1-1/4. Group IC steel pipe, zinc-coated, shall meet the strength and coating requirements of ASTM F 1043. Group II, formed steel sections, size 1-21/32 inch, conforming to ASTM F 1043, may be used as braces and rails if Group II line posts are furnished.

2.5 WIRE

2.5.1 Tension Wire

Tension wire shall be Type I or Type II, Class 2 coating, in accordance with ASTM A 824.

2.6 ACCESSORIES

ASTM F 626. Ferrous accessories shall be zinc or aluminum coated. Truss rods shall be furnished for each terminal post. Truss rods shall be provided with turnbuckles or other equivalent provisions for adjustment. Barbed wire shall be 2 strand, 12-1/2 gauge wire, zinc-coated, Class 3 in accordance with ASTM A 121 or aluminum coated Type I in accordance with ASTM A 585. Barbed wire shall be four-point barbed type steel wire. Barbed wire support arms shall be the type indicated and of the design required for the post furnished. Tie wire for attaching fabric to rails, braces, and posts shall be 9 gauge steel wire and match the coating of the fence fabric. Miscellaneous hardware coatings shall conform to ASTM A 153/A 153M unless modified.

2.7 CONCRETE

ASTM C 94/C 94M, using 3/4 inch maximum size aggregate, and having minimum compressive strength of 3000 psi at 28 days. Grout shall consist of one part portland cement to three parts clean, well-graded sand and the minimum amount of water to produce a workable mix.

PART 3 EXECUTION

3.1 INSTALLATION

Fence shall be installed to the lines and grades indicated. The area on either side of the fence line shall be cleared to the extent indicated. Line posts shall be spaced equidistant at intervals not exceeding 10 feet. Terminal (corner, gate, and pull) posts shall be set at abrupt changes in vertical and horizontal alignment. Fabric shall be continuous between terminal posts; however, runs between terminal posts shall not exceed 500 feet. Any damage to galvanized surfaces, including welding, shall be repaired with paint containing zinc dust in accordance with ASTM A 780.

3.2 EXCAVATION

Post holes shall be cleared of loose material. Waste material shall be spread where directed. The ground surface irregularities along the fence line shall be eliminated to the extent necessary to maintain a 2 inch clearance between the bottom of the fabric and finish grade.

3.3 POST INSTALLATION

3.3.1 Posts for Chain Link Fence

Posts shall be set plumb and in alignment. Except where solid rock is encountered, posts shall be set in concrete to the depth indicated on the drawings. Where solid rock is encountered with no overburden, posts shall be set to a minimum depth of 18 inches in rock. Where solid rock is covered with an overburden of soil or loose rock, posts shall be set to the minimum depth indicated on the drawing unless a penetration of 18 inches in solid rock is achieved before reaching the indicated depth, in which case depth of penetration shall terminate. All portions of posts set in rock shall be grouted. Portions of posts not set in rock shall be set in concrete from the rock to ground level. Posts set in concrete shall be set in holes not less than the diameter shown on the drawings. Diameters of holes in solid rock shall be at least 1 inch greater than the largest cross section of the post. Concrete and grout shall be thoroughly consolidated around each post, shall be free of voids and finished to form a dome. Concrete and grout shall be allowed to cure for 72 hours prior to attachment of any item to the posts. Group II line posts may be mechanically

driven, for temporary fence construction only, if rock is not encountered. Driven posts shall be set to a minimum depth of 3 feet and shall be protected with drive caps when being set.

3.4 RAILS

3.4.1 Top Rail

Top rail shall be supported at each post to form a continuous brace between terminal posts. Where required, sections of top rail shall be joined using sleeves or couplings that will allow expansion or contraction of the rail. Top rail shall be installed as indicated on the drawings.

3.5 BRACES AND TRUSS RODS

Braces and truss rods shall be installed as indicated and in conformance with the standard practice for the fence furnished. Horizontal (compression) braces and diagonal truss (tension) rods shall be installed on fences over 6 feet in height. A center brace or 2 diagonal truss rods shall be installed on 12 foot fences. Braces and truss rods shall extend from terminal posts to line posts. Diagonal braces shall form an angle of approximately 40 to 50 degrees with the horizontal. No bracing is required on fences 6 feet high or less if a top rail is installed.

3.6 TENSION WIRES

Tension wires shall be installed along the bottom of the fence line and attached to the terminal posts of each stretch of the fence. Bottom tension wire shall be installed within the bottom 6 inches of the installed fabric. Tension wire shall be pulled taut and shall be free of sag.

3.7 CHAIN LINK FABRIC

Chain link fabric shall be installed on the side of the post indicated. Fabric shall be attached to terminal posts with stretcher bars and tension bands. Bands shall be spaced at approximately 15 inch intervals. The fabric shall be installed and pulled taut to provide a smooth and uniform appearance free from sag, without permanently distorting the fabric diamond or reducing the fabric height. Fabric shall be fastened to line posts at approximately 15 inch intervals and fastened to all rails and tension wires at approximately 24 inch intervals. Fabric shall be cut by untwisting and removing pickets. Splicing shall be accomplished by weaving a single picket into the ends of the rolls to be joined. The bottom of the installed fabric shall be 2 plus or minus 1/2 inch above the ground.

3.8 BARBED WIRE SUPPORTING ARMS AND BARBED WIRE

3.8.1 General Requirements

Barbed wire supporting arms and barbed wire shall be installed as indicated and as recommended by the manufacturer. Supporting arms shall be anchored to the posts in a manner to prevent easy removal with hand tools. Barbed wire shall be pulled taut and attached to the arms with clips or other means that will prevent easy removal.

3.9 GATE INSTALLATION

Gates shall be installed at the locations shown. Hinged gates shall be mounted to swing as indicated. Latches, stops, and keepers shall be installed as required. Hinge pins, and hardware shall be welded or otherwise secured to prevent removal.

3.10 GROUNDING

Fences crossed by overhead powerlines in excess of 600 volts shall be grounded as specified in Section 13100A LIGHTNING PROTECTION SYSTEM. Electrical equipment attached to the fence shall be grounded as specified in Section 16370A ELECTRICAL DISTRIBUTION SYSTEM, AERIAL or Section 16375A ELECTRICAL DISTRIBUTION SYSTEM, UNDERGROUND. Fences shall be grounded on each side of all gates, at each corner, at the closest approach to each building located within 50 feet of the fence, and where the fence alignment changes more than 15 degrees. Grounding locations shall not exceed 650 feet. Each gate panel shall be bonded with a flexible bond strap to its gate post. Fences crossed by powerlines of 600 volts or more shall be grounded at or near the point of crossing and at distances not exceeding 150 feet on each side of crossing. Ground conductor shall consist of No. 8 AWG solid copper wire. Grounding electrodes shall be 3/4 inch by 10 foot long copper-clad steel rod. Electrodes shall be driven into the earth so that the top of the electrode is at least 6 inches below the grade. Where driving is impracticable, electrodes shall be buried a minimum of 12 inches deep and radially from the fence. The top of the electrode shall be not less than 2 feet or more than 8 feet from the fence. Ground conductor shall be clamped to the fence and electrodes with bronze grounding clamps to create electrical continuity between fence posts, fence fabric, and ground rods. After installation the total resistance of fence to ground shall not be greater than 25 ohms.

-- End of Section --

SECTION TABLE OF CONTENTS

DIVISION 02 - SITE WORK

SECTION 02832

SEGMENTAL CONCRETE BLOCK RETAINING WALL

08/99

PART 1 GENERAL

1.1 REFERENCES
1.2 DEFINITIONS
1.3 SUBMITTALS
1.4 SEGMENTAL RETAINING WALL DESIGN
1.4.1 Design
1.4.1.1 External Stability Design Requirements
1.4.2 Layout
1.5 CONTRACTOR QUALIFICATIONS
1.6 SUPPLIER QUALIFICATIONS
1.7 MANUFACTURER'S REPRESENTATIVE
1.8 DELIVERY, STORAGE AND HANDLING
1.8.1 Segmental Concrete Units and Wall Caps
1.8.2 Geosynthetic Labeling
1.8.3 Geosynthetic Handling
1.8.4 Geosynthetic Storage

PART 2 PRODUCTS

2.1 SEGMENTAL CONCRETE UNITS
2.1.1 Architectural requirements
2.1.2 Structural requirements
2.1.3 Wall Caps
2.2 REINFORCEMENT
2.2.1 Geogrid Reinforcement
2.2.2 Geotextile Reinforcement
2.2.3 Reinforcement Properties
2.2.3.1 Long Term Design Strength
2.3 GEOTEXTILE FILTER
2.4 SOILS AND AGGREGATES
2.5 MASONRY ADHESIVE
2.6 DRAINAGE PIPE

PART 3 EXECUTION

3.1 CLASSIFICATION OF SOIL MATERIALS
3.2 EARTHWORK
3.2.1 Excavation
3.2.2 Stockpiles
3.3 LEVELING PAD
3.3.1 Aggregate Base Leveling Pad
3.3.2 Concrete Leveling Pad
3.4 BLOCK INSTALLATION
3.5 REINFORCEMENT INSTALLATION
3.6 FILL PLACEMENT
3.7 COMPACTION
3.7.1 Degree of Compaction
3.7.2 Moisture Control
3.7.3 Compaction

3.8 SOIL TESTING
3.8.1 General
3.8.2 Transmittal
3.8.3 Corrective Action
3.8.4 Testing Schedule
3.9 REINFORCEMENT TESTING
3.10 DRAINAGE PIPE
3.11 CONSTRUCTION TOLERANCES
3.12 PROTECTION OF WORK

-- End of Section Table of Contents --

SECTION 02832

SEGMENTAL CONCRETE BLOCK RETAINING WALL
08/99

PART 1 GENERAL

This work element includes engineering services in addition to the construction requirements. The Contractor is responsible for engineering services that include design of the wall in accordance with the National Concrete Masonry Association design method, and providing shop drawings indicating all features of the complete design.

1.1 REFERENCES

The publications listed below form a part of the specification to the extent referenced. The publications are referred to in the text by basic designation only.

AMERICAN ASSOCIATION OF STATE HIGHWAY AND TRANSPORTATION OFFICIALS (AASHTO)

AASHTO M 252	(1996) Corrugated Polyethylene Drainage Tubing
AASHTO M 288	(1996) Geotextiles Used for Subsurface Drainage Purposes

AMERICAN SOCIETY FOR TESTING AND MATERIALS (ASTM)

ASTM C 136	(1996a) Sieve Analysis of Fine and Coarse Aggregates
ASTM C 140	(1999b) Sampling and Testing Concrete Masonry Units
ASTM C 920	(1998) Elastomeric Joint Sealants
ASTM C 1262	(1997) Evaluating the Freeze-Thaw Durability of Manufactured Concrete Masonry Units and Related Concrete Units
ASTM C 1372	(1997) Segmental Retaining Wall Units
ASTM D 448	(1986; R 1993) Sizes of Aggregate for Road and Bridge Construction
ASTM D 698	(1998) Laboratory Compaction Characteristics of Soil Using Standard Effort (12,400 ft-lbf/cu. ft. (600 kN-m/cu. m.))
ASTM D 1241	(1968; R 1994) Materials for Soil-Aggregate Subbase, Base, and Surface Courses
ASTM D 1556	(1990; R 1996e1) Density and Unit Weight of Soil in Place by the Sand-Cone Method
ASTM D 2487	(1998) Classification of Soils for Engineering Purposes (Unified Soil Classification System)
ASTM D 2488	(1993) Description and Identification of Soils

	(Visual-Manual Procedure)
ASTM D 2922	(1996e1) Density of Soil and Soil-Aggregate in Place by Nuclear Methods (Shallow Depth)
ASTM D 4355	(1992) Deterioration of Geotextiles from Exposure to Ultraviolet Light and Water (Xenon-Arc Type Apparatus)
ASTM D 4491	(1996) Water Permeability of Geotextiles by Permittivity
ASTM D 4595	(1986; R 1994) Tensile Properties of Geotextiles by the Wide-Width Strip Method
ASTM D 4632	(1991; R 1996) Grab Breaking Load and Elongation of Geotextiles
ASTM D 4751	(1995) Determining Apparent Opening Size of a Geotextile
ASTM D 4873	(1997) Identification, Storage, and Handling of Geosynthetic Rolls
ASTM D 5321	(1992) Determining the Coefficient of Soil and Geosynthetic or Geosynthetic and Geosynthetic Friction by the Direct Shear Method

U.S. FEDERAL HIGHWAY ADMINISTRATION (FHWA)

FHWA SA-96-071	(1997) Mechanically Stabilized Earth Walls and Reinforced Soil Slopes: Design and Construction Guidelines

GEOSYNTHETIC INSTITUTE (GSI)

GSI GRI GG1	(1988) Geogrid Rib Tensile Strength
GSI GRI GG5	(1991) Geogrid Pullout
GSI GRI GG6	(1992) Grip Types for Use in the Wide Width Testing of Geotextiles and Geogrids
GSI GRI GT6	(1992) Geotextile Pullout

NATIONAL CONCRETE MASONRY ASSOCIATION (NCMA)

NCMA SRWU-1	(1997) Determination of Connection Strength between Geosynthetics and Segmental Concrete Units
NCMA SRWU-2	(1997) Determination of Shear Strength between Segmental Concrete Units
NCMA SRW Manual	(1997) Design Manual for Segmental Retaining Walls, 2nd Edition

1.2 DEFINITIONS

a. Blocks. Segmental concrete retaining wall units will be referred to as blocks.

b. Drainage Aggregate. Granular soil or aggregate which is placed within,

between, and/or immediately behind segmental concrete units.

c. Fill. Soil or aggregate placed in, behind, or below the wall will be referred to as fill.

d. Reinforced Fill. Soil which is placed and compacted within the neat line volume of reinforcement as outlined on the plans.

e. Retained Fill. Soil which is placed and compacted behind the reinforced fill.

f. Reinforcement. Reinforcement shall consist of a geogrid or a geotextile product manufactured for use as reinforcing. Reinforcement shall not include steel products.

g. Long Term Design Strength. The long term design strength (LTDS) is:

$$LTDS = T_{ult} / (RF_D * RF_{ID} * RF_{CR})$$

where:

T_{ult} is the ultimate strength
RF_D is the reduction factor for chemical and biological durability
RF_{ID} is the reduction factor for installation damage
RF_{CR} is the reduction factor for creep

1.3 SUBMITTALS

Government approval is required for submittals with a "G" designation; submittals not having a "G" designation are for information only. When used, a designation following the "G" designation identifies the office that will review the submittal for the Government. The following shall be submitted in accordance with Section 01330 SUBMITTAL PROCEDURES:

SD-02 Shop Drawings

Shop Drawings; G-RE

The fabrication and installation drawings shall be submitted. The shop drawings shall include all items described under paragraph SEGMENTAL RETAINING WALL DESIGN.

SD-03 Product Data

Manufacturer's Data; G-AE

The Contractor shall submit descriptive technical data on the blocks, wall caps, masonry adhesive, reinforcement and geotextile filter materials. The submittal shall include all material properties specified under paragraph PRODUCTS. The submittal shall also include a copy of any standard manufacturer's warranties for the products.

Qualifications; G-RE

The Contractor shall provide documentation showing that the installer and supplier meet the qualifications listed.

Soil Testing; G-AE

Reinforcement Testing; G-AE

The Contractor shall submit testing data specific to the blocks and reinforcement to be supplied.

a. The shear strength between blocks shall be established in accordance with NCMA SRWU-2.

b. The connection strength between the blocks and the reinforcement shall be established in accordance with NCMA SRWU-1. If the FHWA design method is used, the modifications in FHWA SA-96-071 shall be implemented.

c. The coefficient for direct shear of the reinforcement on a soil similar in gradation and texture to the material that will be used for fill in the reinforced zone shall be established in accordance with ASTM D 5321.

d. The coefficient of interaction for pull-out resistance of the reinforcement in a soil similar in gradation and texture to the material that will be used for fill in the reinforced zone shall be established in accordance with GSI GRI GG5 or GSI GRI GT6.

Calculations; G-AE

The Contractor shall submit a calculation of the long term design strength for the reinforcement in accordance with the NCMA or FHWA design method. The ultimate strength or index strength shall be based on the minimum average roll value tensile strength of the product using the wide width strength test in ASTM D 4595 or the single rib test in GSI GRI GG1. The calculation shall itemize each reduction factor and include backup data to justify each reduction factor.

The Contractor shall submit design calculations, including computer output data and program documentation. The calculations shall include all items described under PARAGRAPH: SEGMENTAL RETAINING WALL DESIGN.

SD-04 Samples

Segmental Concrete Units; G-RE

The Contractor shall submit two samples of each proposed block. Each sample shall be typical of the size, texture, color, and finish.

Reinforcement; G-AE

The Contractor shall submit samples of each type of reinforcement. The samples shall be labeled and have a minimum size 8 by 10 inches. Geogrid shall include at least 2 apertures (3 junctions) in each direction.

SD-07 Certificates

Reinforcement; G-AE

The Contractor shall submit an affidavit certifying that the reinforcement meets the project specifications. The affidavit shall be signed by an official authorized to certify on behalf of the manufacturer and shall be accompanied by a mill certificate that verifies physical properties were tested during manufacturing and lists the manufacturer's quality control testing. If the affidavit is dated after award of the contract and/or is not specific to the project, the supplier shall attach a statement certifying that the affidavit addressed to the wholesale company is representative of the material supplied. The documents shall include a statement confirming that all purchased resin used to produce reinforcement is virgin resin. The mill certificate shall include the tensile strength tested in

accordance with either ASTM D 4595 or GSI GRI GG1.

1.4 SEGMENTAL RETAINING WALL DESIGN

The Contractor shall complete all stability analyses in accordance with either the NCMA SRW Manual, or the Federal Highway Administration/AASHTO method detailed in FHWA SA-96-071. Only one method shall be followed for the complete design, including reinforcement design strength, layout, stability calculations, and seismic effects. The segmental retaining wall system shall be designed under the direction of, and be signed by, a professional engineer.

1.4.1 Design

Calculations shall include determination of long term design strength of reinforcement specific to this project in accordance with the NCMA SRW Manual or FHWA SA-96-071. Calculations shall include analysis of all failure modes listed in the NCMA SRW Manual. Design calculations shall include a clear outline of material properties and assumptions. The Contractor shall verify the following soil parameters and water elevation for stability analysis, and shall select additional soil parameters as required to complete the analysis. The soil parameters below are based on the soil borings shown on the drawings. The field classifications indicate the upper 25 feet consist of sands and clays. Although no laboratory testing was performed to determine the soil parameters, they are considered representative for the field classifications indicated on the log.

Moist Unit Weight of reinforced fill, 115 pcf
Saturated Unit Weight of reinforced fill, 130 pcf
Internal Friction Angle of reinforced fill, 15 degrees
Cohesion of reinforced fill, 0 psf
Water Elevation in reinforced fill, 0 feet

1.4.1.1 External Stability Design Requirements

As a minimum requirement, the length of the reinforcing at the base of the wall shall not be less than 0.7 times the total height of the blocks.

1.4.2 Layout

Shop drawings shall reflect all information needed to fabricate and erect the walls including the leveling pad elevations; the shape and dimensions of wall elements; the number, size, type, and details of the soil reinforcing system and anchorage; and identification of areas requiring coping. The design and layout of the internal reinforcement shall be subject to the following:

a. All features indicated in the contract documents shall be incorporated in the final design and construction.

b. The leveling pad elevations may vary, but shall be no higher than the embedment depth profile shown.

c. Each reinforcement level shall run as continuous as practical throughout the profile. If a geotextile filter is present, the reinforcement shall be laid out so that interference with the geotextile is minimized.

d. Any reinforcement not placed with the machine direction as the design reinforcement direction shall be identified on the shop drawings.

e. Reinforcement attached to the wall facing shall not combine geogrid and geotextile, nor products from different manufacturers, within one wall. The number of reinforcement products shall be limited to avoid confusion in placement. For walls under 12 feet high, all reinforcement shall be the

same grade and strength (i.e. design with one reinforcement strength).

1.5 CONTRACTOR QUALIFICATIONS

The job foreman or the company directly responsible for the wall installation shall have at least 2 years experience.

1.6 SUPPLIER QUALIFICATIONS

Suppliers of segmental retaining wall system components shall have demonstrated experience in the supply of similar size and types of segmental retaining walls on previous projects.

1.7 MANUFACTURER'S REPRESENTATIVE

The Contractor shall have a qualified and experienced representative from the block or reinforcement manufacturer available on an as-needed basis during the wall construction. The representative shall visit the site for consultation at least once during construction.

1.8 DELIVERY, STORAGE AND HANDLING

The Contractor shall check products upon delivery to assure that the proper material has been received and is undamaged. For geosynthetics, the guidelines presented in ASTM D 4873 shall be followed.

1.8.1 Segmental Concrete Units and Wall Caps

The Contractor shall protect blocks from damage and exposure to cement, paint, excessive mud, and like materials. The Contractor shall check materials upon delivery to assure that the block dimensions are within the tolerances specified.

1.8.2 Geosynthetic Labeling

Each roll shall be labeled with the manufacturer's name, product identification, roll dimensions, lot number, and date manufactured.

1.8.3 Geosynthetic Handling

Geosynthetic rolls shall be handled and unloaded by hand, or with load carrying straps, a fork lift with a stinger bar, or an axial bar assembly. Geosynthetic rolls shall not be dragged, lifted by one end, lifted by cables or chains, or dropped to the ground.

1.8.4 Geosynthetic Storage

Geosynthetics shall be protected from cement, paint, excessive mud, chemicals, sparks and flames, temperatures in excess of 160 degrees F, and any other environmental condition that may degrade the physical properties. If stored outdoors, the rolls shall be elevated from the ground surface. Geosynthetics, except for extruded grids, shall be protected with an opaque waterproof cover. Geosynthetics shall be delivered to the site in a dry and undamaged condition. Geotextiles shall not be exposed to direct sunlight for more than 7 days.

PART 2 PRODUCTS

2.1 SEGMENTAL CONCRETE UNITS

2.1.1 Architectural requirements

a. Face color - Tan.

b. Face Texture - split face typical of broken mortar/brick face.

c. Face Appearance - straight, single-surface face/sculptured with 3-surface beveled face/rounded, smooth-curved face.

d. Batter - Blocks shall be engaged to the block below by use of keys, lips, pins, clips, or other reliable mechanism to provide a consistent wall batter between 1H:6V and 1H:16V.

e. Block Size - a minimum of 2/3 square feet of face area, and minimum 6 inch height.

f. Bond configuration - No bond configuration is required for straight face blocks. Beveled or sculptured face blocks shall be designed to stack with a half-bond (joints located at midpoint of vertically adjacent blocks). The block edges shall be finished so that vertical joints are flush.

2.1.2 Structural requirements

The blocks shall be manufactured to the requirements of ASTM C 1372, except for the following modifications:

a. Minimum 28-day compressive strength of 4500 psi, based on net area in accordance with ASTM C 140.

b. A maximum moisture absorption rate of 9 pcf, in accordance with ASTM C 140.

c. The minimum oven dry density of concrete shall be 125 pcf.

d. The blocks shall provide a minimum of 80 pounds per square foot of wall face area (determined without void filling).

e. For freeze-thaw durability tested in accordance with ASTM C 1262, specimens shall comply with either of the following: (1) the weight loss of each of 5 specimens after 100 cycles shall not exceed 1 percent; or (2) the weight loss of each of 5 specimens after 150 cycles shall not exceed 1.5 percent.

2.1.3 Wall Caps

Segmental concrete block units shall be placed as caps on top of all segmental concrete retaining walls. The cap blocks shall have a color and texture on exposed faces to match that of the other blocks and meet the requirements for the other blocks except that the minimum height shall be 3 inches. Each cap block shall have abutting edges saw cut or formed to provide tight, flush abutting joints with no gaps in the joints when placed end to end in the alignment shown on the drawings.

2.2 REINFORCEMENT

2.2.1 Geogrid Reinforcement

Geogrid shall be a geosynthetic manufactured for reinforcement applications. The geogrid shall be a regular network of integrally connected polymer tensile elements with aperture geometry sufficient to permit significant mechanical interlock with the surrounding soil, aggregate, or other fill materials. The geogrid structure shall be dimensionally stable and able to retain its geometry under manufacture, transport and installation. The geogrid shall be manufactured with 100 percent virgin resin consisting of polyethylene, polypropylene, or polyester, and with a maximum of 5 percent in-plant regrind material. Polyester resin shall have a minimum molecular weight of 25,000 and a carboxyl end group number less than 30. Polyethylene and polypropylene shall be

stabilized with long term antioxidants.

2.2.2 Geotextile Reinforcement

Geotextile shall be a pervious sheet of polymeric material and shall consist of long-chain synthetic polymers composed of at least 95 percent by weight polyethylene, polypropylene, or polyesters. The geotextile shall be manufactured with 100 percent virgin resin, and with a maximum of 5 percent in-plant regrind material. Geotextile shall be formed into a network such that the filaments or yarns retain dimensional stability relative to each other, including the selvages. Polyester resin shall have a minimum molecular weight of 20,000 and a carboxyl end group number less than 50. Polyethylene and polypropylene shall be stabilized with long term antioxidants.

For survivability during installation, and in addition to installation damage used in calculating the long term design strength, the geotextile shall meet the minimum requirements in AASHTO M 288 Class 1, and shall have a minimum mass per unit area of 8 oz/sy.

2.2.3 Reinforcement Properties

The reinforcement shown in the approved shop drawing submittal shall meet the long term design strength requirements used in the design, and shall meet the properties listed in Table 1. Reinforcement strength requirements represent minimum average roll values in the machine direction.

TABLE 1. REINFORCEMENT PROPERTIES

PROPERTY	REQUIREMENT	TEST DESIGNATION
Permittivity (geotextiles)	0.5 per second	ASTM D 4491
UV Resistance	70 percent after 500 hours	ASTM D 4355

2.2.3.1 Long Term Design Strength

The long term design strength shall be based on reduction factors for installation damage and durability that are applicable to the fill that will be used. Minimum reduction factors for durability include: 1.1 for polyethylene and polypropylene geosynthetics, 1.15 for coated polyester geogrids, and 1.6 for polyester geotextiles. The creep reduction factor must be consistent with the test procedure used for determining the ultimate strength.

2.3 GEOTEXTILE FILTER

Geotextiles used as filters shall meet the requirements specified in Table 2. The property values (except for AOS) represent minimum average roll values (MARV) in the weakest principal direction. For survivability during installation, the geotextile shall meet the minimum requirements in AASHTO M 288 Class 2, and shall have a minimum mass per unit area of 8 oz/sy.

TABLE 2. GEOTEXTILE PHYSICAL PROPERTIES

PROPERTY	TEST REQUIREMENT	TEST METHOD
Grab Tensile, lbs.	160 nonwoven 250 woven	ASTM D 4632

TABLE 2. GEOTEXTILE PHYSICAL PROPERTIES

PROPERTY	TEST REQUIREMENT	TEST METHOD
Apparent Opening Size (U.S. Sieve)	70 - 100	ASTM D 4751
Permittivity, sec-1	0.5	ASTM D 4491

2.4 SOILS AND AGGREGATES

All material placed as fill shall consist of material classified by ASTM D 2487 as GW, GP, GC, GM, SP, SM, SC, CL, ML, or SW. The material shall be free of ice; snow; frozen earth; trash; debris; sod; roots; organic matter; contamination from hazardous, toxic or radiological substances; or stones larger than 3 inches in any dimension. Each material shall be obtained entirely from one borrow source, unless the Contracting Officer determines that quality control is adequate and the alternate source produces material that is similar in gradation, texture, and interaction with the reinforcement. The Contractor shall supply any testing required by the Contracting Officer to evaluate alternate sources. All materials shall be of a character and quality satisfactory for the purpose intended.

a. Drainage Aggregate shall meet the requirements of ASTM D 448, size No.7.

b. Aggregate Base material for the wall leveling pads shall meet the requirements of ASTM D 1241, gradation C.

c. Reinforced Fill. Soil placed in the reinforced fill zone shall consist of granular material with less than 15 percent passing the No. 200 sieve.

c. Retained Fill. Soil placed in the retained fill zone shall meet the minimum requirements above.

2.5 MASONRY ADHESIVE

The masonry adhesive shall meet the following requirements:

a. ASTM C 920, Type S, Grade NS, Class 25
b. expected 30 year life
c. meet the recommendations of the block manufacturer

2.6 DRAINAGE PIPE

The drainage pipe shall be corrugated polyethylene pipe meeting requirements of AASHTO M 252.

PART 3 EXECUTION

3.1 CLASSIFICATION OF SOIL MATERIALS

Classification of soil materials shall be performed by the Contractor in accordance with ASTM D 2488. The Contracting Officer reserves the right to revise the Contractor classifications. In the case of disagreement, the Contracting Officer's classification will govern unless the soils are classified in accordance with ASTM D 2487. All testing completed by the Contractor in conjunction with soil material classification will be considered incidental to the contract work.

3.2 EARTHWORK

The leveling pad and reinforced fill zone shall bear on undisturbed native

soils, or acceptably placed and compacted fill. In the event that it is necessary to remove material to a depth greater than specified or to place fill below the leveling pad not otherwise provided for in the contract, the Contracting Officer shall be notified prior to work and an adjustment in the contract price will be considered in accordance with the contract. Additional work not authorized by the Contracting Officer shall be at the Contractor's expense.

3.2.1 Excavation

Foundation soil shall be excavated as required for leveling pad dimensions and reinforcement placement shown on the construction drawings. Material for backfilling shall be stockpiled in a neat and orderly manner at a sufficient distance from the banks of the excavation to avoid overloading and to prevent slides or caving. Excavation and fill shall be performed in a manner and sequence that will provide proper drainage at all times. The Contractor is responsible for disposal of surplus material, waste material, and material that does not meet specifications, including any soil which is disturbed by the Contractor's operations or softened due to exposure to the elements and water.

3.2.2 Stockpiles

Stockpiles of all material to be incorporated into the work shall be kept in a neat and well drained condition, giving due consideration to drainage at all times. The ground surface at stockpile locations shall be cleared, grubbed, and sealed. Topsoil shall be stockpiled separately from suitable backfill material. Stockpiles of aggregates and granular soils shall be protected from contamination which may destroy the quality and fitness of the stockpiled material. If the Contractor fails to protect the stockpiles, and any material becomes frozen, saturated, intermixed with other materials, or otherwise out of specification or unsatisfactory for the use intended, such material shall be removed and replaced with new material from approved sources at no additional cost to the Government.

3.3 LEVELING PAD

3.3.1 Aggregate Base Leveling Pad

The subgrade below the leveling pad shall be compacted with at least 3 passes with a vibratory plate compactor with an operating weight not less than 450 pounds. The aggregate base material shall be placed in lifts not exceeding 6 inches and compacted with at least 3 passes with a vibratory plate compactor. If the subgrade or aggregate base pumps, bleeds water, or cracks during compaction, the Contracting Officer shall be notified and, if no other changes are directed, the aggregate shall be replaced with a concrete leveling pad.

3.3.2 Concrete Leveling Pad

Tolerances in screeding shall be sufficient to place the blocks directly on the leveling pad without mortar, pointing, or leveling course between the blocks and leveling pad.

3.4 BLOCK INSTALLATION

The wall system components shall be constructed in accordance with the wall supplier's recommendations and construction manual. Damaged blocks shall not be incorporated in the retaining wall.

a. Block placement shall begin at the lowest leveling pad elevation. The blocks shall be in full contact with the leveling pad. Each course of block shall be placed sequentially for the entire wall alignment to maintain a level working platform for layout of reinforcement and placement of fill.

b. The grade and alignment of the first course shall be surveyed and the results furnished to the Contracting Officer prior to placing the second course. Survey control for alignment shall include a string line, offset from a base line, or suitable provisions that can be reproduced for quality assurance.

c. The blocks shall be placed with the edges in tight contact. The vertical joints shall be maintained with a minimum 4 inch overlap on the underlying block. Coping required to keep block alignment shall be done with a full depth saw cut. No splitting shall be allowed.

d. Stacking of blocks prior to filling any lower course of block with drainage aggregate will not be allowed.

e. Cap units shall be joined using masonry adhesive. Care shall be taken to keep adhesive from coming into contact with the face of wall units.

3.5 REINFORCEMENT INSTALLATION

a. Before placing reinforcement, the subgrade or subsequent lift of fill shall be compacted and graded level with the top of the blocks. The surface shall be smooth and free of windrows, sheepsfoot impressions, and rocks.

b. Reinforcement shall be placed at the elevations and to the extent shown on the construction drawings and the approved shop drawing submittal. Reinforcement shall be oriented with the design strength axis perpendicular to the wall face. Each segment of reinforcement shall be continuous. Spliced connections between shorter pieces of reinforcement will not be allowed. Reinforcement strips shall be placed immediately next to adjacent strips to provide 100 percent coverage.

c. The reinforcement shall be installed in tension. The reinforcement shall be pulled taut and anchored with staples or stakes prior to placing the overlying lift of fill. The tension shall be uniform along the length of the wall and consistent between layers.

d. All reinforcement shall be 100% covered by soil so that reinforcement panels do not contact in overlaps. Where the wall bends, a veneer of fill shall be placed to a nominal thickness of 3 inches to separate overlapping reinforcement.

3.6 FILL PLACEMENT

a. Fill placement, including drainage aggregate, shall be completed to the top of each course of facing blocks prior to stacking the subsequent course of blocks.

b. Reinforced fill shall be placed from the wall back toward the fill area to ensure that the reinforcement remains taut. Fill shall be placed, spread, and compacted in such manner that minimizes the development of wrinkles in or movement of the reinforcement.

c. A minimum fill thickness of 6 inches is required prior to operation of vehicles over the reinforcement. Sudden braking and sharp turning shall be avoided. Tracked equipment shall not turn within the reinforced fill zone to prevent tracks from displacing the fill and damaging the reinforcement. Construction equipment shall not be operated directly upon the reinforcement as part of the planned construction sequence. Rubber tired equipment may operate directly on the reinforcement if: the Contractor submits information documenting testing of equipment operating on a similar geogrid product on similar soils, the travel is infrequent, equipment travels slow, turning is minimized, and no damage or displacement to the reinforcement is observed.

d. Drainage aggregate shall be placed and tamped directly behind, between, and within the cells of the facing units. Compaction of the drainage aggregate shall be achieved by at least two passes on each lift with a vibratory plate compactor. Care shall be taken not to contact or chip the blocks with the compactor. Aggregate placed within the block cores and recesses shall be compacted by hand tamping and rodding.

e. At the end of each day, the Contractor shall slope the last lift of fill away from the wall in a manner that will allow drainage and direct runoff away from the wall face.

3.7 COMPACTION

Fill shall not be placed on surfaces that contain mud, frost, organic soils, fill soils that have not met compaction requirements, or where the Contracting Officer determines that unsatisfactory material remains in or under the fill. Fill shall be spread and compacted in lifts not exceeding the height of one course of blocks.

3.7.1 Degree of Compaction

Degree of compaction required is expressed as a percentage of the maximum density obtained by the test procedure presented in ASTM D 698. The maximum density is hereafter abbreviated as the "Standard Proctor" value.

3.7.2 Moisture Control

Control of moisture in the fill shall be maintained to provide acceptable compaction. Disking and plowing will not be allowed in the reinforced fill zone. Moisture content of cohesive soils shall be adjusted at the borrow source before placement. Adding water directly to the reinforced fill zone shall only be conducted under conditions where the soil has sufficient porosity and capillarity to provide uniform moisture throughout the fill during compaction.

3.7.3 Compaction

Reinforced and retained fill shall be compacted to 95 percent of the Standard Proctor Density. Care shall be exercised in the compaction process to avoid misalignment of the facing blocks. Heavy compaction equipment (including vibratory drum rollers) shall not be used within 3 feetfrom the wall face.

3.8 SOIL TESTING

3.8.1 General

All testing expenses shall be the Contractor's responsibility. Prior to sampling and testing the work, testing laboratories shall be inspected and approved in accordance with Section 01451, CONTRACTOR QUALITY CONTROL. The Contracting Officer reserves the right to direct the location and select the material for samples to be tested and to direct where and when moisture-density tests shall be performed. Nuclear density testing equipment shall be used in general accordance with ASTM D 2922.

3.8.2 Transmittal

The Contracting Officer shall be informed of test results daily for direction on corrective action required. Draft copies of field testing results shall be furnished to the Contracting Officer on a frequent and regular basis, as directed.

3.8.3 Corrective Action.

Tests of materials which do not meet the contract requirements (failing test) will not be counted as part of the required testing. Each such failing test must be retaken at the same location as the failing test was taken. If testing indicates material does not meet the contract requirements, the material represented by the failing test shall not be placed in the contract work or shall be recompacted or removed. The quantity of material represented by the failing test shall be determined by the Contracting Officer up to the quantity represented by the testing frequency. The Contractor may increase testing frequency in the vicinity of a failing test in order to reduce removal requirements, as approved by the Contracting Officer. Such increases in testing frequency shall be at the Contractor's expense and at no additional cost to the Government.

3.8.4 Testing Schedule

Moisture-Density Relations (ASTM D 698)

One test for each material variation.

In-Place Densities (ASTM D 1556 or ASTM D 2922)

Not less than 1 test for each 2 vertical feet per 300 linear feet along wall face.

Sieve Analysis, (ASTM C 136)

(1) Drainage Aggregate.

3.9 REINFORCEMENT TESTING

All testing expenses shall be the Contractor's responsibility. Testing shall be performed by a commercial testing laboratory selected by the Contractor and approved by the Contracting Officer or performed by the Contractor if approved by the Contracting Officer. The Contracting Officer reserves the right to direct the location and select the material for samples.

TABLE 3. REINFORCEMENT TESTING

PROPERTY	TEST DESIGNATION	FREQUENCY
Wide Width Strip Tensile Strength	ASTM D 4595	5000 square yards
or		
Single Rib Tensile Strength	GSI GRI GG1	5000 square yards

ASTM D 4595 shall be modified for geogrids considering recommendations in GSI GRI GG6; and the tensile strength shall be expressed on a unit length basis by substituting n*a for Ws, where:

Ws = specimen width, (inches)
n = number of ribs in the sample (must be a whole number)
a = nominal rib spacing for the product tested, (inches)

3.10 DRAINAGE PIPE

Drain pipe shall be placed as indicated on the drawings. Drain lines shall be laid to true grades and alignment with a continuous fall in the direction of flow. The interior of the pipe shall be kept clean from soil and debris; and open ends shall be temporarily capped as necessary.

3.11 CONSTRUCTION TOLERANCES

a. Horizontal: The top of wall shall be within 3 inches of the plan location.

b. Vertical: The top of wall elevations shall be within 0.1 feet above to 0.1 feet below the prescribed top of wall elevations shown on the drawings.

c. Plumbness and Alignment: The wall batter and alignment offset measured as deviation from a straight edge shall be within plus or minus 1.25 inches per 10 feet section. The batter measured from vertical shall be within 2 degrees of the plan dimension.

d. Block Defects: The blocks will be accepted on the basis of tolerances specified in ASTM C 1372.

e. Block Gaps: Gaps between adjacent blocks shall not exceed 1/8 inches.

3.12 PROTECTION OF WORK

Work shall be protected against damage from subsequent operations. Disturbed or displaced blocks shall be removed and replaced to conform to all requirements of this section. Damaged material shall not be incorporated into the wall. Upon completion of wall erection, the Contractor shall clean the wall face to remove any loose soil deposits or stains.

-- End of Section --

SECTION TABLE OF CONTENTS

DIVISION 02 - SITE WORK

SECTION 02921A

SEEDING

05/01

PART 1 GENERAL

1.1 REFERENCES
1.2 SUBMITTALS
1.3 SOURCE INSPECTION
1.4 DELIVERY, INSPECTION, STORAGE, AND HANDLING
1.4.1 Delivery
1.4.1.1 Delivered Topsoil
1.4.1.2 Soil Amendments
1.4.1.3 Pesticides
1.4.2 Inspection
1.4.3 Storage
1.4.4 Handling
1.4.5 Time Limitation

PART 2 PRODUCTS

2.1 SEED
2.1.1 Seed Classification
2.1.2 Permanent Seed Species and Mixtures
2.1.3 Temporary Seed Species
2.1.4 Quality
2.1.5 Seed Mixing
2.1.6 Substitutions
2.2 TOPSOIL
2.3 SOIL AMENDMENTS
2.3.1 pH Adjuster
2.3.1.1 Limestone
2.3.2 Fertilizer
2.3.3 Organic Material
2.3.3.1 Rotted Manure
2.3.3.2 Decomposed Wood Derivatives
2.4 MULCH
2.4.1 Wood Cellulose Fiber
2.5 WATER
2.6 PESTICIDE
2.7 SURFACE EROSION CONTROL MATERIAL
2.7.1 Surface Erosion Control Blanket
2.7.2 Erosion Control Material Anchors

PART 3 EXECUTION

3.1 INSTALLING SEED TIME AND CONDITIONS
3.1.1 Seeding Time
3.1.2 Seeding Conditions
3.1.3 Equipment Calibration

3.1.4 Soil Test
3.2 SITE PREPARATION
3.2.1 Finished Grade and Topsoil
3.2.2 Application of Soil Amendments
3.2.2.1 Applying pH Adjuster
3.2.2.2 Applying Fertilizer
3.2.3 Tillage
3.2.4 Prepared Surface
3.2.4.1 Preparation
3.2.4.2 Debris
3.2.4.3 Protection
3.3 INSTALLATION
3.3.1 Installing Seed
3.3.1.1 Broadcast Seeding
3.3.1.2 Drill Seeding
3.3.1.3 Rolling
3.3.2 Hydroseeding
3.3.3 Mulching
3.3.3.1 Non-Asphaltic Tackifier
3.3.3.2 Wood Cellulose Fiber
3.4 SURFACE EROSION CONTROL
3.4.1 Surface Erosion Control Material
3.4.2 Temporary Seeding
3.4.2.1 Soil Amendments
3.4.2.2 Remaining Soil Amendments
3.5 QUANTITY CHECK
3.6 APPLICATION OF PESTICIDE
3.6.1 Technical Representative
3.6.2 Application
3.7 RESTORATION AND CLEAN UP
3.7.1 Restoration
3.7.2 Clean Up
3.8 PROTECTION OF INSTALLED AREAS
3.9 SEED ESTABLISHMENT PERIOD
3.9.1 Commencement
3.9.2 Satisfactory Stand of Grass Plants
3.9.3 Maintenance During Establishment Period
3.9.3.1 Mowing
3.9.3.2 Post-Fertilization
3.9.3.3 Pesticide Treatment
3.9.3.4 Repair or Reinstall
3.9.3.5 Maintenance Record

-- End of Section Table of Contents --

SECTION 02921A

SEEDING
05/01

PART 1 GENERAL

1.1 REFERENCES

The publications listed below form a part of this specification to the extent referenced. The publications are referred to in the text by basic designation only.

U.S. DEPARTMENT OF AGRICULTURE (USDA)

AMS Seed Act	(1995) Federal Seed Act Regulations Part 201

AMERICAN SOCIETY FOR TESTING AND MATERIALS (ASTM)

ASTM C 602	(1995a) Agricultural Liming Materials
ASTM D 4972	(1995a) pH of Soils
ASTM D 5268	(1992; R 1996) Topsoil Used for Landscaping Purposes

1.2 SUBMITTALS

Government approval is required for submittals with a "G" designation; submittals not having a "G" designation are for information only. When used, a designation following the "G" designation identifies the office that will review the submittal for the Government. The following shall be submitted in accordance with Section 01330 SUBMITTAL PROCEDURES:

SD-03 Product Data

Equipment;
Surface Erosion Control Material;
Chemical Treatment Material;

Manufacturer's literature including physical characteristics, application and installation instructions for equipment, surface erosion control material and chemical treatment material.

A listing of equipment to be used for the seeding operation.

Delivery;

Delivery schedule.

Finished Grade and Topsoil;

Finished grade status.

Topsoil;

Availability of topsoil from the stripping and stock piling operation.

Quantity Check;

Bag count or bulk weight measurements of material used compared with area covered to determine the application rate and quantity installed.

Seed Establishment Period;

Calendar time period for the seed establishment period. When there is more than one seed establishment period, the boundaries of the seeded area covered for each period shall be described.

Maintenance Record;

Maintenance work performed, area repaired or reinstalled, diagnosis for unsatisfactory stand of grass plants.

Application of Pesticide;

Pesticide treatment plan with sequence of treatment work with dates and times. The pesticide trade name, EPA registration number, chemical composition, formulation, concentration of original and diluted material, application rate of active ingredients, method of application, area treated, amount applied; and the name and state license number of the state certified applicator shall be included.

SD-04 Samples

Delivered Topsoil;

Samples taken from several locations at the source.

Soil Amendments;

A 10 pound sample.

Mulch;

A 10 pound sample.

SD-06 Test Reports

Equipment Calibration;

Certification of calibration tests conducted on the equipment used in the seeding operation.

Soil Test;

Certified reports of inspections and laboratory tests, prepared by an independent testing agency, including analysis and interpretation of test results. Each report shall be properly

identified. Test methods used and compliance with recognized test standards shall be described.

SD-07 Certificates

Seed;
Topsoil;
pH Adjuster;
Fertilizer;
Organic Material;
Mulch;
Pesticide;

Prior to the delivery of materials, certificates of compliance attesting that materials meet the specified requirements. Certified copies of the material certificates shall include the following:

a. Seed. Classification, botanical name, common name, percent pure live seed, minimum percent germination and hard seed, maximum percent weed seed content, and date tested.

b. Topsoil. Particle size, pH, organic matter content, textural class, soluble salts, chemical and mechanical analyses.

c. pH Adjuster. Calcium carbonate equivalent and sieve analysis.

c. Fertilizer. Chemical analysis and composition percent.

d. Organic Material: Composition and source.

f. Mulch: Composition and source.

g. Pesticide. EPA registration number and registered uses.

1.3 SOURCE INSPECTION

The source of delivered topsoil shall be subject to inspection.

1.4 DELIVERY, INSPECTION, STORAGE, AND HANDLING

1.4.1 Delivery

A delivery schedule shall be provided at least 10 calendar days prior to the first day of delivery.

1.4.1.1 Delivered Topsoil

Prior to the delivery of any topsoil, its availability shall be verified in paragraph TOPSOIL. A soil test shall be provided for topsoil delivered to the site.

1.4.1.2 Soil Amendments

Soil amendments shall be delivered to the site in the original, unopened containers bearing the manufacturer's chemical analysis. In lieu of containers, soil amendments may be furnished in bulk. A chemical analysis shall be provided for bulk deliveries.

1.4.1.3 Pesticides

Pesticide material shall be delivered to the site in the original, unopened containers bearing legible labels indicating the EPA registration number and the manufacturer's registered uses.

1.4.2 Inspection

Seed shall be inspected upon arrival at the job site for conformity to species and quality. Seed that is wet, moldy, or bears a test date five months or older, shall be rejected. Other materials shall be inspected for compliance with specified requirements. The following shall be rejected: open soil amendment containers or wet soil amendments; topsoil that contains slag, cinders, stones, lumps of soil, sticks, roots, trash or other material over a minimum 1-1/2 inch diameter; and topsoil that contains viable plants and plant parts. Unacceptable materials shall be removed from the job site.

1.4.3 Storage

Materials shall be stored in designated areas. Seed, lime, and fertilizer shall be stored in cool, dry locations away from contaminants. Material shall be stored according to manufacturer's instructions and not with seeding operation materials.

1.4.4 Handling

Except for bulk deliveries, materials shall not be dropped or dumped from vehicles.

1.4.5 Time Limitation

Hydroseeding time limitation for holding seed in the slurry shall be a maximum 24 hours.

PART 2 PRODUCTS

2.1 SEED

2.1.1 Seed Classification

State-certified seed of the latest season's crop shall be provided in original sealed packages bearing the producer's guaranteed analysis for percentages of mixture, purity, germination, hard seed, weed seed content, and inert material. Labels shall be in conformance with AMS Seed Act and applicable state seed laws.

2.1.2 Permanent Seed Species and Mixtures

Permanent seed species and mixtures shall be proportioned by weight as follows:

Spring-Summer Seeding (March 1 - August 31):
65 pounds hulled Bermuda Grass Seed per acre

Fall-Winter Seeding (September 1 - February 28):
125 pounds unhulled Bermuda Grass Seed per acre

2.1.3 Temporary Seed Species

Temporary seed species for surface erosion control or overseeding shall be Rye (Secale cereale)seeded at a rate of 50 pounds per acre, or German millet seeded at a rate of 50 pounds per acre.

2.1.4 Quality

Weed seed shall be a maximum 1 percent by weight of the total mixture.

2.1.5 Seed Mixing

The mixing of seed may be done by the seed supplier prior to delivery, or on site as directed.

2.1.6 Substitutions

Substitutions will not be allowed without written request and approval from the Contracting Officer.

2.2 TOPSOIL

Topsoil shall be as defined in ASTM D 5268. When available, the topsoil shall be the existing surface soil stripped and stockpiled onsite in accordance with Section 02300a EARTHWORK. When additional topsoil is required beyond the available topsoil from the stripping operation, topsoil shall be delivered and amended as recommended by the soil test for the seed specified. Topsoil shall be free from slag, cinders, stones, lumps of soil, sticks, roots, trash or other material over a minimum 1-1/2 inch diameter. Topsoil shall be free from viable plants and plant parts.

2.3 SOIL AMENDMENTS

Soil amendments shall consist of pH adjuster, fertilizer, organic material meeting the following requirements. Vermiculite shall not be used.

2.3.1 pH Adjuster

The pH adjuster shall be an agricultural liming material in accordance with ASTM C 602. These materials may be burnt lime, hydrated lime, ground limestone, sulfur, or shells. The pH adjuster shall be used to create a favorable soil pH for the plant material specified.

2.3.1.1 Limestone

Limestone material shall contain a minimum calcium carbonate equivalent of 80 percent. Gradation: A minimum 95 percent shall pass through a No. 8 sieve and a minimum 55 percent shall pass through a No. 60 sieve. To raise soil pH, ground limestone shall be used.

2.3.2 Fertilizer

It shall be as recommended by the soil test The nutrients ratio shall be 10 percent nitrogen, 20 percent phosphorus, and 20 percent potassium. Fertilizer shall be controlled release commercial grade, free flowing, uniform in composition, and consist of a nitrogen-phosphorus-potassium ratio. The fertilizer shall be derived from sulphur coated urea, urea formaldehyde, plastic or polymer coated pills, or isobutylenediurea (IBDU). Fertilizer shall be balanced with the inclusion of trace minerals and

micro-nutrients.

2.3.3 Organic Material

Organic material shall consist of either rotted manure, decomposed wood derivatives.

2.3.3.1 Rotted Manure

Rotted manure shall be unleached horse, or cattle manure containing a maximum 25 percent by volume of straw, sawdust, or other bedding materials. It shall contain no chemicals or ingredients harmful to plants. The manure shall be heat treated to kill weed seeds and be free of stones, sticks, and soil.

2.3.3.2 Decomposed Wood Derivatives

Decomposed wood derivatives shall be ground bark, sawdust, yard trimmings, or other wood waste material that is free of stones, sticks, soil, and toxic substances harmful to plants, and is fully composted or stabilized with nitrogen.

2.4 MULCH

Mulch shall be free from weeds, mold, and other deleterious materials. Mulch materials shall be native to the region.

2.4.1 Wood Cellulose Fiber

Wood cellulose fiber shall not contain any growth or germination-inhibiting factors and shall be dyed an appropriate color to facilitate placement during application. Composition on air-dry weight basis: 9 to 15 percent moisture, pH range from 4.5 to 6.0.

2.5 WATER

Water shall be the responsibility of the Contractor, unless otherwise noted. Water shall not contain elements toxic to plant life.

2.6 PESTICIDE

Pesticide shall be insecticide, herbicide, fungicide, nematocide, rodenticide or miticide. For the purpose of this specification, a soil fumigant shall have the same requirements as a pesticide. The pesticide material shall be EPA registered and approved.

2.7 SURFACE EROSION CONTROL MATERIAL

Surface erosion control material shall conform to the following:

2.7.1 Surface Erosion Control Blanket

Shall be machine produced mat of knitted straw, blanket-like mat construction, covered with degradable plastic mesh or interwoven degradable thread or plastic netting.

2.7.2 Erosion Control Material Anchors

Erosion control anchors shall be as recommended by the manufacturer.

PART 3 EXECUTION

3.1 INSTALLING SEED TIME AND CONDITIONS

3.1.1 Seeding Time

Seed shall be installed from March 15 to June 1 for spring establishment; and from August 15 to September 30 for fall establishment.

3.1.2 Seeding Conditions

Seeding operations shall be performed only during periods when beneficial results can be obtained. When drought, excessive moisture, or other unsatisfactory conditions prevail, the work shall be stopped when directed. When special conditions warrant a variance to the seeding operations, proposed alternate times shall be submitted for approval.

3.1.3 Equipment Calibration

Immediately prior to the commencement of seeding operations, calibration tests shall be conducted on the equipment to be used. These tests shall confirm that the equipment is operating within the manufacturer's specifications and will meet the specified criteria. The equipment shall be calibrated a minimum of once every day during the operation. The calibration test results shall be provided within 1 week of testing.

3.1.4 Soil Test

Delivered topsoil, existing soil in smooth graded areas, and stockpiled topsoil shall be tested in accordance with ASTM D 5268 and ASTM D 4972 for determining the particle size, pH, organic matter content, textural class, chemical analysis, soluble salts analysis, and mechanical analysis. Sample collection on site shall be random over the entire site. Sample collection for stockpiled topsoil shall be at different levels in the stockpile. The soil shall be free from debris, noxious weeds, toxic substances, or other materials harmful to plant growth. The test shall determine the quantities and type of soil amendments required to meet local growing conditions for the seed species specified.

3.2 SITE PREPARATION

3.2.1 Finished Grade and Topsoil

The Contractor shall verify that finished grades are as indicated on drawings, and the placing of topsoil, smooth grading, and compaction requirements have been completed in accordance with Section 02300a EARTHWORK, prior to the commencement of the seeding operation.

3.2.2 Application of Soil Amendments

Fertilizer and pH adjuster shall be applied as recommended by the soil test. For bidding purposes apply 4,000 pounds of dolomitic limestone and 450 pounds of fertilizer per acre, unless corrected by the soil test.

3.2.2.1 Applying pH Adjuster

The pH adjuster shall be applied as recommended by the soil test. The pH adjuster shall be incorporated into the soil to a maximum 4 inch depth or

may be incorporated as part of the tillage operation.

3.2.2.2 Applying Fertilizer

The fertilizer shall be applied as recommended by the soil test. Fertilizer shall be incorporated into the soil to a maximum 4 inch depth or may be incorporated as part of the tillage or hydroseeding operation.

3.2.3 Tillage

Soil on slopes up to a maximum 3-horizontal-to-1-vertical shall be tilled to a minimum 4 inch depth. On slopes between 3-horizontal-to-1-vertical and 1-horizontal-to-1 vertical, the soil shall be tilled to a minimum 2 inch depth by scarifying with heavy rakes, or other method. Rototillers shall be used where soil conditions and length of slope permit. On slopes 1-horizontal-to-1 vertical and steeper, no tillage is required. Drainage patterns shall be maintained as indicated on drawings. Areas compacted by construction operations shall be completely pulverized by tillage. Soil used for repair of surface erosion or grade deficiencies shall conform to topsoil requirements. The pH adjuster, fertilizer, and soil conditioner may be applied during this procedure.

3.2.4 Prepared Surface

3.2.4.1 Preparation

The prepared surface shall be a maximum 1 inch below the adjoining grade of any surfaced area. New surfaces shall be blended to existing areas. The prepared surface shall be completed with a light raking to remove debris.

3.2.4.2 Debris

Debris and stones over a minimum 1 inch in any dimension shall be removed from the surface.

3.2.4.3 Protection

Areas with the prepared surface shall be protected from compaction or damage by vehicular or pedestrian traffic and surface erosion.

3.3 INSTALLATION

Prior to installing seed, any previously prepared surface compacted or damaged shall be reworked to meet the requirements of paragraph SITE PREPARATION. Seeding operations shall not take place when the wind velocity will prevent uniform seed distribution.

3.3.1 Installing Seed

Seeding procedure shall ensure even coverage. Gravity feed applicators, which drop seed directly from a hopper onto the prepared soil, shall not be used because of the difficulty in achieving even coverage, unless otherwise approved.

3.3.1.1 Broadcast Seeding

Seed shall be uniformly broadcast at twice the recommended rate using broadcast seeders. Half the total rate of seed application shall be

broadcast in 1 direction, with the remainder of the seed rate broadcast at 90 degrees from the first direction. Seed shall be covered a maximum 1/4 inch depth by disk harrow, steel mat drag, cultipacker, or other approved device.

3.3.1.2 Drill Seeding

Seed shall be uniformly drilled to a maximum 1/2 inch depth and at the recommended rate using equipment having drills a maximum 6 inches distance apart. Row markers shall be used with the drill seeder. Half the total rate of seed application shall be drilled in 1 direction, with the remainder of the seed rate drilled at 90 degrees from the first direction. The drilling equipment shall be maintained with half full seed boxes during the seeding operations.

3.3.1.3 Rolling

The entire area shall be firmed with a roller not exceeding 90 pounds per foot roller width. Slopes over a maximum 3-horizontal-to-1 vertical shall not be rolled. Areas seeded with seed drills equipped with rollers shall not be rolled.

3.3.2 Hydroseeding

Seed shall be mixed to ensure broadcast at the recommended rate. Seed and fertilizer shall be added to water and thoroughly mixed to meet the rates specified. The time period for the seed to be held in the slurry shall be a maximum 24 hours. Wood cellulose fiber mulch and tackifier shall be added at the rates recommended by the manufacturer after the seed, fertilizer, and water have been thoroughly mixed to produce a homogeneous slurry. Slurry shall be uniformly applied under pressure over the entire area. The hydroseeded area shall not be rolled.

3.3.3 Mulching

3.3.3.1 Non-Asphaltic Tackifier

Hydrophilic colloid shall be applied at the rate recommended by the manufacturer, using hydraulic equipment suitable for thoroughly mixing with water. A uniform mixture shall be applied over the area.

3.3.3.2 Wood Cellulose Fiber

Wood cellulose fiber shall be applied as part of the hydroseeding operation. The mulch shall be mixed and applied in accordance with the manufacturer's recommendations.

3.4 SURFACE EROSION CONTROL

3.4.1 Surface Erosion Control Material

Shall be installed on all seeded surfaces shown on the plans as steeper than 4 horizontal to 1 vertical and where indicated on the drawings. Surface erosion control material shall be installed in accordance with manufacturer's instructions. Placement of the material shall be accomplished without damage to installed material or without deviation to finished grade.

3.4.2 Temporary Seeding

When directed during contract delays affecting the seeding operation or when a quick cover is required to prevent surface erosion, the areas designated shall be seeded in accordance with temporary seed species listed under Paragraph SEED.

3.4.2.1 Soil Amendments

When soil amendments have not been applied to the area, the quantity of 1/2 of the required soil amendments shall be applied and the area tilled in accordance with paragraph SITE PREPARATION.

3.4.2.2 Remaining Soil Amendments

The remaining soil amendments shall be applied in accordance with the paragraph Tillage when the surface is prepared for installing seed.

3.5 QUANTITY CHECK

For materials provided in bags, the empty bags shall be retained for recording the amount used. For materials provided in bulk, the weight certificates shall be retained as a record of the amount used. The amount of material used shall be compared with the total area covered to determine the rate of application used. Differences between the quantity applied and the quantity specified shall be adjusted as directed.

3.6 APPLICATION OF PESTICIDE

When application of a pesticide becomes necessary to remove a pest or disease, a pesticide treatment plan shall be submitted and coordinated with the installation pest management program.

3.6.1 Technical Representative

The certified installation pest management coordinator shall be the technical representative, and shall be present at all meetings concerning treatment measures for pest or disease control. They may be present during treatment application.

3.6.2 Application

A state certified applicator shall apply required pesticides in accordance with EPA label restrictions and recommendations. Clothing and personal protective equipment shall be used as specified on the pesticide label. A closed system is recommended as it prevents the pesticide from coming into contact with the applicator or other persons. Water for formulating shall only come from designated locations. Filling hoses shall be fitted with a backflow preventer meeting local plumbing codes or standards. Overflow shall be prevented during the filling operation. Prior to each day of use, the equipment used for applying pesticide shall be inspected for leaks, clogging, wear, or damage. Any repairs are to be performed immediately. A pesticide plan shall be submitted.

3.7 RESTORATION AND CLEAN UP

3.7.1 Restoration

Existing turf areas, pavements, and facilities that have been damaged from the seeding operation shall be restored to original condition at

Contractor's expense.

3.7.2 Clean Up

Excess and waste material shall be removed from the seeded areas and shall be disposed offsite. Adjacent paved areas shall be cleaned.

3.8 PROTECTION OF INSTALLED AREAS

Immediately upon completion of the seeding operation in an area, the area shall be protected against traffic or other use by erecting barricades and providing signage as required, or as directed.

3.9 SEED ESTABLISHMENT PERIOD

3.9.1 Commencement

The seed establishment period to obtain a healthy stand of grass plants shall begin on the first day of work under this contract and shall end 3 months after the last day of the seeding operation. Written calendar time period shall be furnished for the seed establishment period. When there is more than 1 seed establishment period, the boundaries of the seeded area covered for each period shall be described. The seed establishment period shall be modified for inclement weather, shut down periods, or for separate completion dates of areas.

3.9.2 Satisfactory Stand of Grass Plants

Grass plants shall be evaluated for species and health when the grass plants are a minimum 6 inch high. A satisfactory stand of grass plants from the seeding operation shall be a minimum 200 grass plants per square foot. The total bare spots shall not exceed 5 percent of the total seeded area.

3.9.3 Maintenance During Establishment Period

Maintenance of the seeded areas shall include watering the newly planted grass and keeping the soil continually moist the first three weeks, then there after watering every other day so the seeded areas are watered a total of 3" of water a week; eradicating weeds, insects and diseases; protecting embankments and ditches from surface erosion; maintaining erosion control materials and mulch; protecting installed areas from traffic; mowing; and post-fertilization.

3.9.3.1 Mowing

Seeded areas shall be mowed during the season to a minimum 2-1/2 inch height. Clippings shall be removed when the amount cut prevents sunlight from reaching the ground surface.

3.9.3.2 Post-Fertilization

The fertilizer shall be applied as recommended by the soil test. A maximum 1/2 pound per 1000 square feet of actual available nitrogen shall be provided to the grass plants. The application shall be timed prior to the advent of winter dormancy and shall be made without burning the installed grass plants.

3.9.3.3 Pesticide Treatment

Treatment for disease or pest shall be in accordance with paragraph APPLICATION OF PESTICIDE.

3.9.3.4 Repair or Reinstall

Unsatisfactory stand of grass plants and mulch shall be repaired or reinstalled, and eroded areas shall be repaired in accordance with paragraph SITE PREPARATION.

3.9.3.5 Maintenance Record

A record of each site visit shall be furnished, describing the maintenance work performed; areas repaired or reinstalled; and diagnosis for unsatisfactory stand of grass plants.

-- End of Section --

SECTION TABLE OF CONTENTS

DIVISION 02 - SITE WORK

SECTION 02922A

SODDING

01/02

PART 1 GENERAL

1.1 REFERENCES
1.2 SUBMITTALS
1.3 SOURCE INSPECTION
1.4 DELIVERY, INSPECTION, STORAGE, AND HANDLING
1.4.1 Delivery
1.4.1.1 Sod
1.4.1.2 Delivered Topsoil
1.4.1.3 Soil Amendments
1.4.1.4 Pesticides
1.4.2 Inspection
1.4.3 Storage
1.4.3.1 Sod
1.4.3.2 Other Material Storage
1.4.4 Handling
1.4.5 Time Limitation

PART 2 PRODUCTS

2.1 SOD
2.1.1 Sod Classification
2.1.2 Grass Species
2.1.3 Quality
2.1.4 Thickness
2.1.5 Anchors
2.1.6 Substitutions
2.2 TOPSOIL
2.3 SOIL AMENDMENTS
2.3.1 Fertilizer
2.3.2 Organic Material
2.3.2.1 Rotted Manure
2.3.2.2 Decomposed Wood Derivatives
2.4 WATER
2.5 PESTICIDE

PART 3 EXECUTION

3.1 INSTALLING SOD TIME AND CONDITIONS
3.1.1 Sodding Time
3.1.2 Sodding Conditions
3.2 SITE PREPARATION
3.2.1 Finished Grade and Topsoil
3.2.2 Application of Soil Amendments
3.2.2.1 Applying Fertilizer
3.2.2.2 Applying Organic Material
3.2.3 Tillage
3.2.4 Prepared Surface
3.2.4.1 Preparation
3.2.4.2 Protection

3.3 INSTALLATION
3.3.1 Installing Sod
3.3.2 Finishing
3.3.3 Rolling
3.3.4 Watering Sod
3.4 QUANTITY CHECK
3.5 APPLICATION OF PESTICIDE
3.5.1 Technical Representative
3.5.2 Application
3.6 RESTORATION AND CLEAN UP
3.6.1 Restoration
3.6.2 Clean Up
3.7 PROTECTION OF INSTALLED AREAS
3.8 SOD ESTABLISHMENT PERIOD
3.8.1 Commencement
3.8.2 Satisfactory Stand of Grass Plants
3.8.3 Maintenance During Establishment Period
3.8.3.1 Mowing
3.8.3.2 Post-Fertilization
3.8.3.3 Pesticide Treatment
3.8.3.4 Repair
3.8.3.5 Maintenance Record

-- End of Section Table of Contents --

SECTION 02922A

SODDING
01/02

PART 1 GENERAL

1.1 REFERENCES

AMERICAN SOCIETY FOR TESTING AND MATERIALS (ASTM)

ASTM D 5268	(1992; R 1996) Topsoil Used for Landscaping Purposes

1.2 SUBMITTALS

Government approval is required for submittals with a "G" designation; submittals not having a "G" designation are for information only. When used, a designation following the "G" designation identifies the office that will review the submittal for the Government. The following shall be submitted in accordance with Section 01330 SUBMITTAL PROCEDURES:

SD-03 Product Data

Chemical Treatment Material;

A listing of equipment to be used for the sodding operation. Manufacturer's literature including physical characteristics, application and installation instructions for equipment and chemical treatment material.

Delivery;

Delivery schedule.

Finished Grade and Topsoil;

Finished grade status.

Topsoil;

Availability of topsoil from the stripping and stock piling operation.

Quantity Check;

Bag count or bulk weight measurements of material used compared with area covered to determine the application rate and quantity installed. The quantity of sod used shall be compared against the total area installed.

Sod Establishment Period;

Calendar time period for the sod establishment period. When there is more than one sod establishment period, the boundaries of the sodded area covered for each period shall be described.

Maintenance Record;

Maintenance work performed, area repaired or reinstalled, diagnosis

for unsatisfactory stand of grass plants.

Application of Pesticide;

Pesticide treatment plan with sequence of treatment work with dates and times. The pesticide trade name, EPA registration number, chemical composition, formulation, concentration of original and diluted material, application rate of active ingredients, method of application, area treated, amount applied; and the name and state license number of the state certified applicator shall be included.

SD-04 Samples

Delivered Topsoil;

Samples taken from several locations at the source.

Soil Amendments;

A 10 pound sample.

SD-06 Test Reports

Soil Test;

Certified reports of inspections and laboratory tests, prepared by an independent testing agency, including analysis and interpretation of test results. Each report shall be properly identified. Test methods used and compliance with recognized test standards shall be described.

SD-07 Certificates

Sod;
Topsoil;
Fertilizer;
Organic Material;
- Pesticide;

Prior to the delivery of materials, certificates of compliance attesting that materials meet the specified requirements. Certified copies of the material certificates shall include the following:

a. Sod. Classification, botanical name, common name, mixture percentage of species, percent purity, quality grade, field location and state certification.

b. Topsoil. Particle size, organic matter content, textural class, soluble salts, chemical and mechanical analyses.

d. Fertilizer. Chemical analysis and composition percent.

e. Organic Material: Composition and source.

f. Pesticide. EPA registration number and registered uses.

1.3 SOURCE INSPECTION

The sources of sod material and delivered topsoil shall be subject to inspection.

1.4 DELIVERY, INSPECTION, STORAGE, AND HANDLING

1.4.1 Delivery

A delivery schedule shall be provided at least 10 calendar days prior to the first day of delivery.

1.4.1.1 Sod

Sod shall be protected during delivery to prevent desiccation, internal heat buildup, or contamination.

1.4.1.2 Delivered Topsoil

Prior to the delivery of any topsoil, its availability shall be verified in paragraph TOPSOIL.

1.4.1.3 Soil Amendments

Soil amendments shall be delivered to the site in the original, unopened containers bearing the manufacturer's chemical analysis. In lieu of containers, soil amendments may be furnished in bulk. A chemical analysis shall be provided for bulk deliveries.

1.4.1.4 Pesticides

Pesticide material shall be delivered to the site in the original, unopened containers bearing legible labels indicating the EPA registration number and the manufacturer's registered uses.

1.4.2 Inspection

Sod shall be inspected upon arrival at the job site for conformity to species. Sod shall be checked for visible broadleaf weeds, and a visible consistency with no obvious patches of foreign grasses that exceed 2 percent of the canopy. Sod that is heating up, dry, moldy, yellow, irregularly shaped, torn, or of uneven thickness shall be rejected. Other materials shall be inspected for compliance with specified requirements. Open soil amendment containers or wet soil amendments; topsoil that contains slag, cinders, stones, lumps of soil, sticks, roots, trash or other material over a minimum 1-1/2 inch diameter; and topsoil that contains viable plants and plant parts, shall be rejected. Unacceptable materials shall be removed from the job site.

1.4.3 Storage

1.4.3.1 Sod

Sod shall be stored in designated areas and kept in a moist condition by watering with a fine mist, and covered with moist burlap, straw, or other covering. Covering shall allow air to circulate, preventing internal heat from building up. Sod shall be protected from exposure to wind and direct sunlight until installed.

1.4.3.2 Other Material Storage

Materials shall be stored in designated areas. Fertilizer shall be stored in cool, dry locations, away from contaminants. Chemical treatment materialshall be stored according to manufacturer's instructions and not with sod operation materials.

1.4.4 Handling

Sod shall not be damaged during handling. Except for bulk deliveries, materials shall not be dropped or dumped from vehicles.

1.4.5 Time Limitation

Time limitation between harvesting and installing sod shall be a maximum 36 hours.

PART 2 PRODUCTS

2.1 SOD

2.1.1 Sod Classification

State-certified sod shall be provided as classified by applicable state laws. Sod section shall be sized to permit rolling and lifting without breaking.

2.1.2 Grass Species

Grass species shall be Tiffway hybrid Bermuda grass or approved equal.

2.1.3 Quality

Sod shall be relatively free of thatch, diseases, nematodes, soil-borne insects, weeds or undesirable plants, stones larger than 1 inch in diameter, woody plant roots, and other materials detrimental to a healthy stand of grass plants. Broadleaf weeds and patches of foreign grasses shall be a maximum 2 percent of the sod section.

2.1.4 Thickness

Sod shall be machine cut to a minimum 1-3/8 inch thickness. Measurement for thickness shall exclude top growth and thatch.

2.1.5 Anchors

Sod anchors shall be as recommended by the sod supplier.

2.1.6 Substitutions

Substitutions will not be allowed without written request and approval from the Contracting Officer.

2.2 TOPSOIL

Topsoil shall be as defined in ASTM D 5268. When available, the topsoil shall be the existing surface soil stripped and stockpiled onsite. When additional topsoil is required beyond the available topsoil from stripping operation, topsoil shall be delivered and amended as specified. Topsoil shall be free from slag, cinders, stones, lumps of soil, sticks, roots, trash, or other material over a maximum 1-1/2 inch diameter. Topsoil shall be free from viable plants and plant parts.

2.3 SOIL AMENDMENTS

Soil amendments shall consist of fertilizer and organic material meeting the following requirements. Vermiculite shall not be used.

2.3.1 Fertilizer

Fertilizer shall be controlled release commercial grade, free flowing, uniform in composition, and consist of a nitrogen-phosphorus-potassium ratio 18-46-0. The fertilizer shall be derived from sulphur coated urea, urea formaldehyde, plastic or polymer coated pills, or isobutylenediurea (IBDU). Fertilizer shall be balanced with the inclusion of trace minerals and micro-nutrients.

2.3.2 Organic Material

Organic material shall consist of either rotted manure, decomposed wood derivatives.

2.3.2.1 Rotted Manure

Rotted manure shall be unleached horse, chicken or cattle manure containing a maximum 25 percent by volume straw, sawdust, or other bedding materials. Manure shall contain no chemicals or ingredients harmful to plants. The manure shall be heat treated to kill weed seeds and be free of stones, sticks, and soil.

2.3.2.2 Decomposed Wood Derivatives

Decomposed wood derivatives shall be ground bark, sawdust, yard trimmings, or other wood waste material free of stones, sticks, soil, and toxic substances harmful to plants, fully composted or stabilized with nitrogen.

2.4 WATER

Water shall be the responsibility of the Contractor unless otherwise noted. Water shall not contain elements toxic to plant life.

2.5 PESTICIDE

Pesticide shall be insecticide, herbicide, fungicide, nematocide, rodenticide or miticide. For the purpose of this specification, a soil fumigant shall have the same requirements as a pesticide. The pesticide material shall be EPA registered and approved.

PART 3 EXECUTION

3.1 INSTALLING SOD TIME AND CONDITIONS

3.1.1 Sodding Time

Sod shall be installed from April 1 to October 15.

3.1.2 Sodding Conditions

Sodding operations shall be performed only during periods when beneficial results can be obtained. When drought, excessive moisture or other unsatisfactory conditions prevail, the work shall be stopped when directed. When special conditions warrant a variance to the sodding operations, proposed alternate times shall be submitted for approval.

3.2 SITE PREPARATION

3.2.1 Finished Grade and Topsoil

Prior to the commencement of the sodding operation, the Contractor shall verify that finished grades are as indicated on drawings; the placing of topsoil, smooth grading, and compaction requirements have been completed in accordance with Section 02300a EARTHWORK.

3.2.2 Application of Soil Amendments

3.2.2.1 Applying Fertilizer

Fertilizer shall be applied at the rate of 0.5 kg of actual nitrogen per 100 square meters (1 pound of actual nitrogen per 1,000 square feet). Fertilizer shall be incorporated into the soil to a maximum 4 inch depth or may be incorporated as part of the tillage or hydroseeding operation.

3.2.2.2 Applying Organic Material

The organic material shall be spread uniformly over the soil a minimum 1 inch depth and thoroughly incorporated by tillage into the soil to a maximum 4 inches depth.

3.2.3 Tillage

Soil on slopes up to a maximum 3-horizontal-to-1-vertical shall be tilled to a minimum 4 inches deep. On slopes between 3-horizontal-to-1-vertical and 1-horizontal-to-1 vertical, the soil shall be tilled to a minimum 2 inches deep by scarifying with heavy rakes, or other method. Rototillers shall be used where soil conditions and length of slope permit. On slopes 1-horizontal-to-1 vertical and steeper, no tillage is required. Drainage patterns shall be maintained as indicated on drawings. Areas compacted by construction operations shall be completely pulverized by tillage. Soil used for repair of surface erosion or grade deficiencies shall conform to topsoil requirements. The fertilizer may be applied during this procedure.

3.2.4 Prepared Surface

3.2.4.1 Preparation

The prepared surface shall be a maximum 1 inch below the adjoining grade of any surfaced area. New surfaces shall be blended to existing areas. The prepared surface shall be rolled and completed with a light raking to remove from the surface debris and stones over a minimum 5/8 inch in any dimension.

3.2.4.2 Protection

Areas within the prepared surface shall be protected from compaction or damage by vehicular or pedestrian traffic and surface erosion.

3.3 INSTALLATION

Prior to installing sod, any previously prepared surface compacted or damaged shall be reworked to meet the requirements of paragraph SITE PREPARATION. Areas shall be sodded as indicated. Adequate soil moisture shall be ensured prior to sodding by spraying water on the area to be sodded and wetting the soil to a maximum 1 inch depth.

3.3.1 Installing Sod

Rows of sod sections shall be placed parallel to and tightly against each other. Joints shall be staggered laterally. The sod sections shall not be stretched or overlapped. All joints shall be butted tight. Voids and air drying of roots shall be prevented. Sod sections shall be laid across the slope on long slopes. Sod sections shall be laid at right angles to the flow of water in ditches. Sod sections shall be anchored on slopes steeper than 3-horizontal-to-1-vertical. Anchoring may be required when surface weight or pressure upon placed sod sections is anticipated to cause lateral movement. Sod anchors shall be placed a minimum 2 feet on center with a minimum 2 anchors per sod section.

3.3.2 Finishing

Displacement of the sod shall be prevented by tamping or rolling the sod in place and knitting the sod to the soil. Air pockets shall be eliminated and a true and even surface shall be provided. Frayed edges shall be trimmed, and holes or missing corners shall be patched with sod.

3.3.3 Rolling

The entire area shall be firmed with a roller not exceeding 90 pounds per foot roller width. Slopes over a maximum 3-horizontal-to-1 vertical shall not be rolled.

3.3.4 Watering Sod

Watering shall be started immediately after completing each day of installing sod. Initially sod shall be watered every day for the first two weeks. Thereafter water shall be applied at least 3 times per week to supplement rainfall, at a rate sufficient to ensure moist soil conditions to a minimum depth of 1 inch. Run-off, puddling, and wilting shall be prevented. Unless otherwise directed, watering trucks shall not be driven over turf areas. Watering of other adjacent areas or plant material shall be prevented.

3.4 QUANTITY CHECK

For materials provided in bags, the empty bags shall be retained for recording the amount used. For materials provided in bulk, the weight certificates shall be retained as a record of the amount used. The amount of the material used shall be compared with the total area covered to determine the rate of application. The quantity of sod used shall be compared against the total area established with sod. Differences between the quantity applied and the quantity specified shall be adjusted as directed.

3.5 APPLICATION OF PESTICIDE

When application of a pesticide becomes necessary to remove a pest or disease, a pesticide treatment plan shall be submitted and coordinated with the installation pest management program.

3.5.1 Technical Representative

The certified installation pest management coordinator shall be the technical representative, and shall be present at all meetings concerning treatment measures for pest or disease control. They may be present during treatment application.

3.5.2 Application

A state certified applicator shall apply required pesticides in accordance with EPA label restrictions and recommendations. Clothing and personal protective equipment shall be used as specified on the pesticide label. A closed system is recommended as it prevents the pesticide from coming into contact with the applicator or other persons. Water for formulating shall only come from designated locations. Filling hoses shall be fitted with a backflow preventer meeting local plumbing codes or standards. Overflow shall be prevented during the filling operation. Prior to each day of use, the equipment used for applying pesticide shall be inspected for leaks, clogging, wear, or damage. Any repairs are to be performed immediately.

3.6 RESTORATION AND CLEAN UP

3.6.1 Restoration

Existing turf areas, pavements, and facilities that have been damaged from the sodding operation shall be restored to original condition at Contractor's expense.

3.6.2 Clean Up

Excess and waste material shall be removed from the sodded areas and shall be disposed offsite. Adjacent paved areas shall be cleaned.

3.7 PROTECTION OF INSTALLED AREAS

Immediately upon completion of the sodding operation in an area, the area shall be protected against traffic or other use by erecting barricades and providing signage as required, or as directed.

3.8 SOD ESTABLISHMENT PERIOD

3.8.1 Commencement

The sod establishment period to obtain a healthy stand of grass plants shall commence on the first day of sodding work under this contract and shall continue through the remaining life of the contract and end 3 months after the last day of sodding operation required by this contract. Written calendar time period shall be furnished for the sod establishment period. When there is more than 1 sod establishment period, the boundaries of the sodded area covered for each period shall be described. The sod establishment period should be coordinated with Sections 02921a SEEDING and 02930a EXTERIOR PLANTING. The sod establishment period shall be modified for inclement weather, shut down periods, or for separate completion dates of areas.

3.8.2 Satisfactory Stand of Grass Plants

Grass plants shall be evaluated for species and health. A satisfactory stand of grass plants from the sodding operation shall be living sod uniform in color and leaf texture. Bare spots shall be a maximum 2 inch square. Joints between sod pieces shall be tight and free from weeds and other undesirable growth.

3.8.3 Maintenance During Establishment Period

Maintenance of the sodded areas shall include eradicating weeds, insects and diseases; protecting embankments and ditches from surface erosion; maintaining erosion control materials and mulch; protecting installed areas from traffic; mowing; watering; and post-fertilization.

3.8.3.1 Mowing

Sodded areas shall be mowed to a minimum 3 inch height when the turf is a maximum 4 inch height. Clippings shall be removed when the amount cut prevents sunlight from reaching the ground surface.

3.8.3.2 Post-Fertilization

The application rate shall be the same as indicated above for initial planting of the sod. The application shall be timed prior to the advent of winter dormancy and shall be made without burning the installed grass plants.

3.8.3.3 Pesticide Treatment

Treatment for disease or pest shall be in accordance with paragraph APPLICATION OF PESTICIDE.

3.8.3.4 Repair

Unsatisfactory stand of grass plants shall be repaired or reinstalled, and eroded areas shall be repaired in accordance with paragraph SITE PREPARATION.

3.8.3.5 Maintenance Record

A record of each site visit shall be furnished which describes the maintenance work performed; areas repaired or reinstalled; and diagnosis for unsatisfactory stand of grass plants.

-- End of Section --

SECTION TABLE OF CONTENTS

DIVISION 02 - SITE WORK

SECTION 02930A

EXTERIOR PLANTING

08/01

PART 1 GENERAL

1.1 REFERENCES
1.2 SUBMITTALS
1.3 SOURCE INSPECTIONS
1.4 DELIVERY, INSPECTION, STORAGE, AND HANDLING
1.4.1 Delivery
1.4.1.1 Plant Material Identification
1.4.1.2 Protection During Delivery
1.4.1.3 Delivered Topsoil
1.4.1.4 Soil Amendments
1.4.2 Inspection
1.4.3 Storage
1.4.3.1 Plant Material Storage
1.4.3.2 Other Material Storage
1.4.4 Handling
1.4.5 Time Limitation
1.5 WARRANTY

PART 2 PRODUCTS

2.1 PLANT MATERIAL
2.1.1 Plant Material Classification
2.1.2 Plant Schedule
2.1.3 Substitutions
2.1.4 Quality
2.1.5 Growing Conditions
2.1.6 Method of Shipment to Maintain Health of Root System
2.1.6.1 Balled and Burlapped (BB) Plant Material
2.1.6.2 Balled and Potted (Pot) Plant Material
2.1.6.3 Container-Grown (C) Plant Material
2.1.7 Growth of Trunk and Crown
2.1.7.1 Deciduous Trees
2.1.7.2 Deciduous Shrubs
2.1.7.3 Coniferous Evergreen Plant Material
2.1.7.4 Broadleaf Evergreen Plant Material
2.1.8 Plant Material Size
2.1.9 Plant Material Measurement
2.2 TOPSOIL
2.3 SOIL AMENDMENTS
2.3.1 Fertilizer
2.3.2 Organic Material
2.3.2.1 Decomposed Wood Derivatives
2.3.2.2 Recycled Compost
2.4 MULCH
2.4.1 Inorganic Mulch
2.4.2 Organic Mulch
2.4.2.1 Shredded Bark
2.5 WOOD STAKING MATERIAL
2.5.1 Bracing Stake

2.5.2 Wood Ground Stakes
2.6 METAL STAKING AND GUYING MATERIAL
2.6.1 Bracing Stakes
2.6.2 Metal Ground Stakes
2.6.3 Guying Material
2.7 GUYING MATERIAL
2.8 FLAG
2.9 MYCORRHIZAL FUNGI INOCULUM
2.10 WATER
2.11 Metal Edging

PART 3 EXECUTION

3.1 INSTALLING PLANT MATERIAL TIME AND CONDITIONS
3.1.1 Deciduous Plant Material Time
3.1.2 Evergreen Plant Material Time
3.1.3 Plant Material Conditions
3.1.4 Tests
3.1.4.1 Percolation Test
3.2 SITE PREPARATION
3.2.1 Finished Grade, Topsoil and Underground Utilities
3.2.2 Layout
3.2.3 Protecting Existing Vegetation
3.3 EXCAVATION
3.3.1 Obstructions Below Ground
3.3.2 Turf Removal
3.3.3 Plant Pits
3.4 INSTALLATION
3.4.1 Setting Plant Material
3.4.2 Backfill Soil Mixture
3.4.3 Adding Mycorrhizal Fungi Inoculum
3.4.4 Backfill Procedure
3.4.4.1 Balled and Burlapped Plant Material
3.4.4.2 Container-Grown and Balled and Potted Plant Material
3.4.4.3 Earth Berm
3.4.5 Plant Bed
3.4.6 Watering
3.4.7 Staking and Guying
3.4.7.1 One Bracing Stake
3.4.7.2 Two Bracing Stakes
3.4.7.3 Three Ground Stakes
3.4.8 Flags
3.5 FINISHING
3.5.1 Plant Material
3.5.2 Placing Mulch
3.5.3 Pruning
3.6 MAINTENANCE DURING PLANTING OPERATION
3.7 RESTORATION AND CLEAN UP
3.7.1 Restoration
3.7.2 Clean Up
3.8 PLANT ESTABLISHMENT PERIOD
3.8.1 Commencement
3.8.2 Maintenance During Establishment Period
3.8.2.1 Watering Plant Material
3.8.2.2 Weeding
3.8.2.3 Post-Fertilization
3.8.2.4 Plant Pit Settling
3.8.2.5 Maintenance Record
3.8.3 Unhealthy Plant Material
3.8.4 Replacement Plant Material

-- End of Section Table of Contents --

SECTION 02930A

EXTERIOR PLANTING
08/01

PART 1 GENERAL

1.1 REFERENCES

The publications listed below form a part of this specification to the extent referenced. The publications are referred to in the text by basic designation only.

AMERICAN NURSERY AND LANDSCAPE ASSOCIATION (ANLA)

ANLA Z60.1	(1996) Nursery Stock

AMERICAN NATIONAL STANDARDS INSTITUTE (ANSI)

ANSI A300	(1995) Tree Care Operations - Trees, Shrubs and other Woody Plant Maintenance

AMERICAN SOCIETY FOR TESTING AND MATERIALS (ASTM)

ASTM D 5268	(1992; R 1996) Topsoil Used for Landscaping Purposes

1.2 SUBMITTALS

Government approval is required for submittals with a "G" designation; submittals not having a "G" designation are for information only. When used, a designation following the "G" designation identifies the office that will review the submittal for the Government. The following shall be submitted in accordance with Section 01330 SUBMITTAL PROCEDURES:

SD-02 Shop Drawings

Finished Grade, Topsoil and Underground Utilities;

Finished grade status; location of underground utilities and facilities; and availability of topsoil from the stripping and stock piling operation.

SD-03 Product Data

Delivery;

Delivery schedule.

Plant Establishment Period; G-RE

Calendar time period for the plant establishment period. When there is more than one establishment period, the boundaries of the planted areas covered for each period shall be described.

Maintenance Record;

Maintenance work performed, quantity of plant losses, and replacements; and diagnosis of unhealthy plant material.

SD-04 Samples

Delivered Topsoil;

Samples taken from several locations at the source.

Soil Amendments;

A 10 pound sample.

Mulch; G-RE,

A 10 pound sample.

SD-07 Certificates

Plant Material;
Topsoil;
Fertilizer;
Organic Material;
Organic Mulch;
Mycorrhizal Fungi Inoculum;

Prior to delivery of materials, certificates of compliance attesting that materials meet the specified requirements. Certified copies of the material certificates shall include the following.

a. Plant Material: Classification, botanical name, common name, size, quantity by species, and location where grown.

b. Topsoil: Particle size, organic matter content, textural class, soluble salts, chemical and mechanical analyses.

c. Fertilizer: Chemical analysis and composition percent.

d. Organic Material: Composition and source.

e. Organic Mulch: Composition, source, and treatment against fungi growth.

f. Mycorrhizal Fungi Inoculum: Plant material treated.

1.3 SOURCE INSPECTIONS

The nursery or source of plant material and the source of delivered topsoil shall be subject to inspection.

1.4 DELIVERY, INSPECTION, STORAGE, AND HANDLING

1.4.1 Delivery

A delivery schedule shall be provided at least 10 calendar days prior to the first day of delivery.

1.4.1.1 Plant Material Identification

Plant material shall be identified with attached, durable, waterproof labels and weather-resistant ink, stating the correct botanical plant name and size.

1.4.1.2 Protection During Delivery

Plant material shall be protected during delivery to prevent desiccation and

damage to the branches, trunk, root system, or earth ball. Branches shall be protected by tying-in. Exposed branches shall be covered during transport.

1.4.1.3 Delivered Topsoil

Prior to the delivery of any topsoil, the availability of topsoil shall be verified in paragraph TOPSOIL.

1.4.1.4 Soil Amendments

Soil amendments shall be delivered to the site in the original, unopened containers bearing the manufacturer's chemical analysis. In lieu of containers, soil amendments may be furnished in bulk. A chemical analysis shall be provided for bulk deliveries.

1.4.2 Inspection

Plant material shall be well shaped, vigorous and healthy with a healthy, well branched root system, free from disease, harmful insects and insect eggs, sun-scald injury, disfigurement or abrasion. Plant material shall be checked for unauthorized substitution and to establish nursery grown status. Plant material showing desiccation, abrasion, sun-scald injury, disfigurement, or unauthorized substitution shall be rejected. The plant material shall exhibit typical form of branch to height ratio; and meet the caliper and height measurements specified. Plant material that measures less than specified, or has been poled, topped off or headed back, shall be rejected. Container-grown plant material shall show new fibrous roots and the root mass shall contain its shape when removed from the container. Plant material with broken or cracked balls; or broken containers shall be rejected. Other materials shall be inspected for compliance with paragraph PRODUCTS. Open soil amendment containers or wet soil amendments shall be rejected. Topsoil that contains slag, cinders, stones, lumps of soil, sticks, roots, trash or other material larger than 1-1/2 inch diameter shall be rejected. Topsoil that contains viable plant material and plant parts shall be rejected. Unacceptable material shall be removed from the job site.

1.4.3 Storage

1.4.3.1 Plant Material Storage

Plant material not installed on the day of arrival at the site shall be stored and protected in designated areas. Plant material shall not be stored longer than 30 days. Plant material shall be protected from direct exposure to wind and sun. All plant material shall be kept in a moist condition by watering with a fine mist spray until installed.

1.4.3.2 Other Material Storage

Storage of other material shall be in designated areas. Soil amendments shall be stored in dry locations and away from contaminants. Chemical treatment material shall be stored according to manufacturer's instructions and not with planting operation material.

1.4.4 Handling

Plant material shall not be injured in handling. Cracking or breaking the earth ball of balled and burlapped plant material shall be avoided. Plant material shall not be handled by the trunk or stems. Materials shall not be dropped from vehicles.

1.4.5 Time Limitation

Except for container-grown plant material, the time limitation from digging to

installing plant material shall be a maximum 90 days. The time limitation between installing the plant material and placing the mulch shall be a maximum 24 hours.

1.5 WARRANTY

Furnished plant material shall have a warranty for plant growth to be in a vigorous growing condition for a minimum 12 month period. A minimum 12 month calendar time period for the warranty of plant growth shall be provided regardless of the contract time period. When plant material is determined to be unhealthy in accordance with paragraph PLANT ESTABLISHMENT PERIOD, it shall be replaced once under this warranty.

PART 2 PRODUCTS

2.1 PLANT MATERIAL

2.1.1 Plant Material Classification

The plant material shall be nursery grown stock conforming to ANLA Z60.1 and shall be the species specified.

2.1.2 Plant Schedule

The plant schedule shall provide botanical names as included in one or more of the publications listed under "Nomenclature" in ANLA Z60.1.

2.1.3 Substitutions

Substitutions will not be permitted without written request and approval from the Contracting Officer.

2.1.4 Quality

Well shaped, well grown, vigorous plant material having healthy and well branched root systems in accordance with ANLA Z60.1 shall be provided. Plant material shall be provided free from disease, harmful insects and insect eggs, sun-scald injury, disfigurement and abrasion. Plant material shall be free of shock or damage to branches, trunk, or root systems, which may occur from the digging and preparation for shipment, method of shipment, or shipment. Plant quality is determined by the growing conditions; method of shipment to maintain health of the root system; and growth of the trunk and crown as follows.

2.1.5 Growing Conditions

Plant material shall be native to or well-suited to the growing conditions of the project site. Plant material shall be grown under climatic conditions similar to those at the project site.

2.1.6 Method of Shipment to Maintain Health of Root System

2.1.6.1 Balled and Burlapped (BB) Plant Material

Ball size and ratio shall be in accordance with ANLA Z60.1. The ball shall be of a diameter and depth to encompass enough fibrous and feeding root system necessary for the full recovery of the plant. The plant stem or trunk shall be centered in the ball. All roots shall be clean cut at the ball surface. Roots shall not be pulled from the ground. Before shipment the root ball shall be dipped in gels containing mycorrhizal fungi inoculum. The root ball shall be completely wrapped with burlap or other suitable material and securely laced with biodegradable twine.

2.1.6.2 Balled and Potted (Pot) Plant Material

Ball size and ratio shall be in accordance with ANLA Z60.1. The ball shall be of a diameter and depth to encompass enough fibrous and feeding root system necessary for the full recovery of the plant. Removal shall be done by hand digging or mechanical devices. The plant stem or trunk shall be centered in the ball. All roots shall be clean cut at the ball surface. Roots shall not be pulled from the ground. Before shipment the root ball shall be dipped in gels containing mycorrhizal fungi inoculum. Container shall be used to retain the ball unbroken. Container shall be rigid to hold ball shape and protect root mass during shipping.

2.1.6.3 Container-Grown (C) Plant Material

Container size shall be in accordance with ANLA Z60.1. Plant material shall be grown in a container over a duration of time for new fibrous roots to have developed and for the root mass to retain its shape and hold together when removed from the container. Container-grown plant material shall be inoculated with mycorrhizal fungi during germination in the nursery. Before shipment the root system shall be dipped in gels containing mycorrhizal fungi inoculum. The container shall be sufficiently rigid to hold ball shape and protect root mass during shipping.

2.1.7 Growth of Trunk and Crown

2.1.7.1 Deciduous Trees

A height to caliper relationship shall be provided in accordance with ANLA Z60.1. Height of branching shall bear a relationship to the size and species of tree specified and with the crown in good balance with the trunk. The trees shall not be "poled" or the leader removed.

a. Single stem: The trunk shall be reasonably straight and symmetrical with crown and have a persistent main leader.

b. Multi-stem: All countable stems, in aggregate, shall average the size specified. To be considered a stem, there shall be no division of the trunk which branches more than 6 inches from ground level.

2.1.7.2 Deciduous Shrubs

Deciduous shrubs shall have the height and number of primary stems recommended by ANLA Z60.1. Acceptable plant material shall be well shaped, with sufficient well-spaced side branches, and recognized by the trade as typical for the species grown in the region of the project.

2.1.7.3 Coniferous Evergreen Plant Material

Coniferous Evergreen plant material shall have the height-to-spread ratio recommended by ANLA Z60.1. The coniferous evergreen trees shall not be "poled" or the leader removed. Acceptable plant material shall be exceptionally heavy, well shaped and trimmed to form a symmetrical and tightly knit plant. The form of growth desired shall be as indicated.

2.1.7.4 Broadleaf Evergreen Plant Material

Broadleaf evergreen plant material shall have the height-to-spread ratio recommended by ANLA Z60.1. Acceptable plant material shall be well shaped and recognized by the trade as typical for the variety grown in the region of the project.

2.1.8 Plant Material Size

Plant material shall be furnished in sizes indicated. Plant material larger in

size than specified may be provided at no additional cost to the Government.

2.1.9 Plant Material Measurement

Plant material measurements shall be in accordance with ANLA Z60.1.

2.2 TOPSOIL

Topsoil shall be as defined in ASTM D 5268. When available, the topsoil shall be the existing surface soil stripped and stockpiled onsite in accordance with Section 02300a EARTHWORK. When additional topsoil is required beyond the available topsoil from the stripping operation, topsoil shall be delivered and amended as recommended. Topsoil shall be free from slag, cinders, stones, lumps of soil, sticks, roots, trash or other material over a minimum 1-1/2 inch diameter. Topsoil shall be free from viable plants and plant parts.

2.3 SOIL AMENDMENTS

Soil amendments shall consist of fertilizer and organic material meeting the following requirements. Vermiculite is not recommended.

2.3.1 Fertilizer

Fertilizer shall be controlled release commercial grade; free flowing, pellet or tablet form; uniform in composition; and consist of a nitrogen-phosphorus-potassium ratio. The fertilizer shall be derived from sulphur coated urea, urea formaldehyde, plastic or polymer coated pills, or isobutylenediurea (IBDU). Fertilizer shall be balanced with the inclusion of trace minerals and micro-nutrients.

2.3.2 Organic Material

Organic material shall consist of either peat or decomposed wood derivatives.

2.3.2.1 Decomposed Wood Derivatives

Decomposed wood derivatives shall be ground bark, sawdust, or other wood waste material free of stones, sticks, and toxic substances harmful to plants, and stabilized with nitrogen.

2.3.2.2 Recycled Compost

Compost shall be a well decomposed, stable, weed free organic matter source. It shall be derived from food, agricultural, or industrial residuals; biosolids (treated sewage sludge); yard trimmings; or source-separated or mixed solid waste. The compost shall possess no objectionable odors and shall not resemble the raw material from which it was derived. The material shall not contain substances toxic to plants. Gradation: The compost material shall pass through a 3/8 inch screen, possess a pH of 5.5 to 8.0, and have a moisture content between 35-55 percent by weight. The material shall not contain more than 1 percent or less by weight of man-made foreign matter. Compost shall be cleaned of plastic materials larger than 2 inches in length. Compost shall conform to EPA requirements in accordance with Section 01670 RECYCLED / RECOVERED MATERIALS.

2.4 MULCH

Mulch shall be free from weeds, mold, and other deleterious materials. Mulch materials shall be native to the region. Rotted manure is not recommended to be used as a mulch because it would encourage surface rooting of the plant material and weeds.

2.4.1 Inorganic Mulch

When inorganic mulch is required for decorative purposes, it shall be provided in areas designated, and consist of:

a. 1-1/2" to 2" washed river rock mulch with a coloring of light tan to brown.

2.4.2 Organic Mulch

Organic mulch materials shall be native to the project site and consist of shredded bark.

2.4.2.1 Shredded Bark

Locally shredded material shall be treated to retard the growth of mold and fungi.

2.5 WOOD STAKING MATERIAL

Wood stakes shall be hardwood or fir; rough sawn; free from knots, rot, cross grain, or other defects that would impair their strength.

2.5.1 Bracing Stake

Wood bracing stakes shall be a minimum 2 x 2 inch square and a minimum 8 feet long with a point at one end. Stake shall be set without damaging rootball.

2.5.2 Wood Ground Stakes

Wood ground stakes shall be a minimum of 2 x 2 inch square and a minimum 3 feet long with a point at one end.

2.6 METAL STAKING AND GUYING MATERIAL

Metal shall be aluminum or steel consisting of recycled content made for holding plant material in place.

2.6.1 Bracing Stakes

Metal bracing stakes shall be a minimum 1 inch diameter and a minimum 6 feet long. Stake shall be set without damaging rootball.

2.6.2 Metal Ground Stakes

Metal ground stakes shall be a minimum 1/2 inch diameter and a minimum 3 feet long.

2.6.3 Guying Material

Metal guying material shall be a minimum 12 gauge wire. Multi-strand cable shall be woven wire. Guying material tensile strength shall conform to the size of tree to be held firmly in place.

2.7 GUYING MATERIAL

Recycled rubber hose material or woven nylon banding shall be used to protect tree trunks and branches when metal guying material is applied. The material shall be the same color throughout the project. Length shall be a minimum 1.5 times the circumference of the plant trunk at its base.

2.8 FLAG

Plastic flag material shall be used on guying material. It shall be a minimum

6 inches long. Tape color shall be consistent and visually complimentary to the entire project area. The tape color shall meet pedestrian visual safety requirements for day and night.

2.9 MYCORRHIZAL FUNGI INOCULUM

Mycorrhizal fungi inoculum shall be composed of multiple-fungus inoculum as recommended by the manufacturer for the plant material specified.

2.10 WATER

Unless otherwise directed, water shall be the responsibility of the Contractor. Water shall not contain elements toxic to plant life.

2.11 Metal Edging

Metal edging shall be commercially made aluminum edging minimum 3/16" thick and 4" tall, green colored, with supplied metal stakes.

PART 3 EXECUTION

3.1 INSTALLING PLANT MATERIAL TIME AND CONDITIONS

3.1.1 Deciduous Plant Material Time

Deciduous plant material shall be installed from April 1 to June 1 for spring planting and October 1 to November 15 for fall planting.

3.1.2 Evergreen Plant Material Time

Evergreen plant material shall be installed from April 1 to June 1 for spring planting and September 1 to October 1 for fall planting.

3.1.3 Plant Material Conditions

Planting operations shall be performed only during periods when beneficial results can be obtained. When drought, excessive moisture, frozen ground or other unsatisfactory conditions prevail, the work shall be stopped when directed. When special conditions warrant a variance to the planting operations, proposed planting times shall be submitted for approval.

3.1.4 Tests

3.1.4.1 Percolation Test

Test for percolation shall be done to determine positive drainage of plant pits and beds. A positive percolation shall consist of a minimum 1 inch per 3 hours; when a negative percolation test occurs contractor will take corrective measures to remedy the situation.

3.2 SITE PREPARATION

3.2.1 Finished Grade, Topsoil and Underground Utilities

The Contractor shall verify that finished grades are as indicated on drawings, and that the placing of topsoil, the smooth grading, and the compaction requirements have been completed prior to the commencement of the planting operation. The location of underground utilities and facilities in the area of the planting operation shall be verified. Damage to underground utilities and facilities shall be repaired at the Contractor's expense.

3.2.2 Layout

Plant material locations and bed outlines shall be staked on the project site before any excavation is made. Plant material locations may be adjusted to meet field conditions.

3.2.3 Protecting Existing Vegetation

When there are established lawns in the planting area, the turf shall be covered and/or protected during planting operations. Existing trees, shrubs, and plant beds that are to be preserved shall be barricaded along the dripline to protect them during planting operations.

3.3 EXCAVATION

3.3.1 Obstructions Below Ground

When obstructions below ground affect the work, shop drawings showing proposed adjustments to plant material location, type of plant and planting method shall be submitted for approval.

3.3.2 Turf Removal

Where the planting operation occurs in an existing lawn area, the turf shall be removed from the excavation area to a depth that will ensure the removal of the entire root system.

3.3.3 Plant Pits

Plant pits for ball and burlapped or container plant material shall be dug to a depth equal to the height of the root ball as measured from the base of the ball to the base of the plant trunk. Plant pits shall be dug a minimum 50 percent wider than the ball or root system to allow for root expansion.

3.4 INSTALLATION

3.4.1 Setting Plant Material

Plant material shall be set plumb and held in position until sufficient soil has been firmly placed around root system or ball. In relation to the surrounding grade, the plant material shall be set even with the grade at which it was grown.

3.4.2 Backfill Soil Mixture

The backfill soil mixture may be a mix of 1/3 topsoil, 1/3 sand, and 1/3 soil amendments suitable for the plant material specified. When practical, the excavated soil from the plant pit that is not amended provides the best backfill and shall be used.

3.4.3 Adding Mycorrhizal Fungi Inoculum

Mycorrhizal fungi inoculum shall be added as recommended by the manufacturer for the plant material specified.

3.4.4 Backfill Procedure

Prior to backfilling, all metal, wood, synthetic products, or treated burlap devices shall be removed from the ball or root system avoiding damage to the root system. The backfill procedure shall remove air pockets from around the root system. Additional requirements are as follows.

3.4.4.1 Balled and Burlapped Plant Material

Biodegradable burlap and tying material shall be carefully opened and folded back from the top a minimum 1/3 depth from the top of the root ball. Backfill

mixture shall be added to the plant pit in 6 inch layers with each layer tamped.

3.4.4.2 Container-Grown and Balled and Potted Plant Material

The plant material shall be carefully removed from containers that are not biodegradeable. Prior to setting the plant in the pit, a maximum 1/4 depth of the root mass, measured from the bottom, shall be spread apart to promote new root growth. For plant material in biodegradable containers the container shall be split prior to setting the plant with container. Backfill mixture shall be added to the plant pit in 6 inch layers with each layer tamped.

3.4.4.3 Earth Berm

An earth berm, consisting of backfill soil mixture, shall be formed with a minimum 4 inch height around the edge of the plant pit to aid in water retention and to provide soil for settling adjustments.

3.4.5 Plant Bed

Plant material shall be set in plant beds according to the drawings. Backfill soil mixture shall be placed on previously scarified subsoil to completely surround the root balls, and shall be brought to a smooth and even surface, blending to existing areas. Earth berms shall be provided. Polymers shall be spread uniformly over the plant bed and in the planting pit as recommended by the manufacturer and thoroughly incorporated into the soil to a maximum 4 inch depth.

3.4.6 Watering

Plant pits and plant beds shall be watered immediately after backfilling, until completely saturated.

3.4.7 Staking and Guying

Staking will be required when trees are unstable or will not remain set due to their size, shape, or exposure to high wind velocity.

3.4.7.1 One Bracing Stake

Trees 4 to 6 feet high shall be firmly anchored in place with one bracing stake. The bracing stake shall be placed on the side of the tree facing the prevailing wind. The bracing stake shall be driven vertically into firm ground and shall not injure the ball or root system. The tree shall be held firmly to the stake with a double strand of guying material. The guying material shall be firmly anchored at a minimum 1/2 tree height and shall prevent girdling. A chafing guard shall be used when metal is the guying material.

3.4.7.2 Two Bracing Stakes

Trees from 6 to 8 feet height shall be firmly anchored in place with 2 bracing stakes placed on opposite sides. Bracing stakes shall be driven vertically into firm ground and shall not injure the ball or root system. The tree shall be held firmly between the stakes with a double strand of guying material. The guying material shall be firmly anchored at a minimum 1/2 tree height and shall prevent girdling. Chafing guards shall be used when metal is the guying material.

3.4.7.3 Three Ground Stakes

Trees over a minimum 8 feet height and less than a maximum 6 inch caliper shall be held firmly in place with 3 bracing or ground stakes spaced equidistantly around the tree. Ground stakes shall be avoided in areas to be

mowed. Stakes shall be driven into firm ground outside the earth berm. The guying material shall be firmly anchored at a minimum 1/2 tree height and shall prevent girdling. For trees over maximum 3 inch diameter at breast height, turnbuckles shall be used on the guying material for tree straightening purposes. One turnbuckle shall be centered on each guy line. Chafing guards shall be used when metal is the guying material.

3.4.8 Flags

A flag shall be securely fastened to each guy line equidistant between the tree and the stake, deadmen, or earth anchor. The flag shall be visible to pedestrians.

3.5 FINISHING

3.5.1 Plant Material

Prior to placing mulch, the tree and shrub bed areas shall be uniformly edged with metal eddging and the edging staked as recommended by the manufacturer to provide a clear division line between the planted area and the adjacent turf area, shaped as indicated. Top of metal edgindg shall be level with top of sidewalks and top of curbs. Individual trees in lawn areas do not require metal edging, but should have lawn/mulch areas clearly and neatly defined with the use of vertical spades. The installed area shall be raked and smoothed while maintaining the earth berms.

3.5.2 Placing Mulch

The placement of mulch shall occur a maximum 48 hours after planting. Mulch, used to reduce soil water loss, regulate soil temperature and prevent weed growth, shall be spread to cover the installed area with a minimum 4 inch uniform thickness. Mulch shall be kept out of the crowns of shrubs, ground cover, and vines and shall be kept off buildings, sidewalks and other facilities. Finish elvation of mulch shall be level with adjacent walks top of curbs and lawns.

3.5.3 Pruning

Pruning shall be accomplished by trained and experienced personnel. The pruning of trees shall be in accordance with ANSI A300. Only dead or broken material shall be pruned from installed plants. The typical growth habit of individual plant material shall be retained. Clean cuts shall be made flush with the parent trunk. Improper cuts, stubs, dead and broken branches shall be removed. "Headback" cuts at right angles to the line of growth will not be permitted. Trees shall not be poled or the leader removed, nor shall the leader be pruned or "topped off".

3.6 MAINTENANCE DURING PLANTING OPERATION

Installed plant material shall be maintained in a healthy growing condition. Maintenance operations shall begin immediately after each plant is installed to prevent desiccation and shall continue until the plant establishment period commences. Installed areas shall be kept free of weeds, grass, and other undesired vegetation. The maintenance includes maintaining the mulch, watering, and adjusting settling.

3.7 RESTORATION AND CLEAN UP

3.7.1 Restoration

Turf areas, pavements and facilities that have been damaged from the planting operation shall be restored to original condition at the Contractor's expense.

3.7.2 Clean Up

Excess and waste material shall be removed from the installed area and shall be disposed offsite. Adjacent paved areas shall be cleared.

3.8 PLANT ESTABLISHMENT PERIOD

3.8.1 Commencement

Upon completion of the last day of the planting operation, the plant establishment period for maintaining installed plant material in a healthy growing condition shall commence and shall be in effect for a minimum of 90 days or the remaining contract time period, whichever is longer, not to exceed 12 months. Written calendar time period shall be furnished for the plant establishment period. When there is more than one plant establishment period, the boundaries of the planted area covered for each period shall be described. The plant establishment period shall be coordinated with Section 02921a SEEDING. The plant establishment period shall be modified for inclement weather shut down periods, or for separate completion dates for areas.

3.8.2 Maintenance During Establishment Period

Maintenance of plant material shall include straightening plant material, straightening stakes; tightening guying material; correcting girdling; supplementing mulch; pruning dead or broken branch tips; maintaining plant material labels; watering; eradicating weeds, insects and disease; post-fertilization; and removing and replacing unhealthy plants.

3.8.2.1 Watering Plant Material

The plant material shall be watered as necessary to prevent desiccation and to maintain an adequate supply of moisture within the root zone. An adequate supply of moisture is estimated to be the equivalent of 1 inch absorbed water per week, delivered in the form of rain or augmented by watering. Run-off, puddling and wilting shall be prevented. Unless otherwise directed, watering trucks shall not be driven over turf areas. Watering of other adjacent areas or existing plant material shall be prevented.

3.8.2.2 Weeding

Grass and weeds in the installed areas shall not be allowed to reach a maximum 3 inches height before being completely removed, including the root system.

3.8.2.3 Post-Fertilization

The plant material shall be topdressed at least once during the period of establishment with controlled release fertilizer, reference paragraph SOIL AMENDMENTS. Apply at the rate of 2 pounds per 100 square feet of plant pit or bed area. Dry fertilizer adhering to plants shall be flushed off. The application shall be timed prior to the advent of winter dormancy.

3.8.2.4 Plant Pit Settling

When settling occurs to the backfill soil mixture, additional backfill soil shall be added to the plant pit or plant bed until the backfill level is equal to the surrounding grade. Serious settling that affects the setting of the plant in relation to the maximum depth at which it was grown requires replanting in accordance with paragraph INSTALLATION. The earth berm shall be maintained.

3.8.2.5 Maintenance Record

A record shall be furnished describing the maintenance work performed, the quantity of plant losses, diagnosis of the plant loss, and the quantity of

replacements made on each site visit.

3.8.3 Unhealthy Plant Material

A tree shall be considered unhealthy or dead when the main leader has died back, or up to a maximum 25 percent of the crown has died. A shrub shall be considered unhealthy or dead when up to a maximum 25 percent of the plant has died. This condition shall be determined by scraping on a branch an area 1/16 inch square, maximum, to determine if there is a green cambium layer below the bark. The Contractor shall determine the cause for unhealthy plant material and shall provide recommendations for replacement. Unhealthy or dead plant material shall be removed immediately and shall be replaced as soon as seasonal conditions permit.

3.8.4 Replacement Plant Material

Unless otherwise directed, plant material shall be provided for replacement in accordance with paragraph PLANT MATERIAL. Replacement plant material shall be installed in accordance with paragraph INSTALLATION, and recommendations in paragraph PLANT ESTABLISHMENT PERIOD. Plant material shall be replaced in accordance with paragraph WARRANTY. An extended plant establishment period shall not be required for replacement plant material.

-- End of Section --