US Army Corps
of Engineers
Savannah District

Pope AFB
North Carolina

Solicitation Number
DACA21-03-R-0021
POL Storage Complex
FY-03, Line Item 46971
Volume II of III – Technical Provisions – Divisions 3 through 13
April 2003

THIS SOLICITATION IS UNRESTRICTED PURSUANT TO THE
"BUSINESS OPPORTUNITY DEVELOPMENT REFORM ACT OF 1988"
(PUBLIC LAW 100-656)

U.S. ARMY ENGINEER DISTRICT, SAVANNAH
CORPS OF ENGINEERS
100 WEST OGLETHORPE AVENUE
SAVANNAH, GEORGIA 31401-3640

PROJECT TABLE OF CONTENTS

DIVISION 01 - GENERAL REQUIREMENTS

01330 SUBMITTAL PROCEDURES
01351A SAFETY, HEALTH, AND EMERGENCY RESPONSE (HTRW/UST)
01400 SPECIAL SAFETY REQUIREMENTS
01450 CHEMICAL DATA QUALITY CONTROL
01451A CONTRACTOR QUALITY CONTROL
01500 TEMPORARY CONSTRUCTION FACILITIES
01670 RECYCLED / RECOVERED MATERIALS
01730 OPERATION AND MAINTENANCE SUPPORT INFORMATION (OMSI)
01731 GENERAL REQUIREMENTS
01780 AS-BUILT DRAWINGS SUBMITTALS
01781 OPERATION AND MAINTENANCE DATA

DIVISION 02 - SITE WORK

02013 ENVIRONMENTAL PROTECTION DURING CONSTRUCTION
02115A ABOVEGROUND STORAGE TANK REMOVAL
02116 REMOVAL AND DISPOSAL OF UNDERGROUND STORAGE TANKS
02220 DEMOLITION
02300a EARTHWORK
02315a EXCAVATION, FILLING AND BACKFILLING FOR BUILDINGS
02316a EXCAVATION, TRENCHING, AND BACKFILLING FOR UTILITIES SYSTEMS
02374a GEOSYNTHETIC DRAINAGE LAYER
02510a WATER DISTRIBUTION SYSTEM
02531a SANITARY SEWERS
02532a FORCE MAINS; SEWER
02547 BITUMINOUS PAVEMENT WITH BASE COURSE
02556a GAS DISTRIBUTION SYSTEM
02630a STORM-DRAINAGE SYSTEM
02721 RIGID BASE COURSE
02754a CONCRETE PAVEMENT
02760a FIELD MOLDED SEALANTS FOR SEALING JOINTS IN RIGID PAVEMENTS
02763a PAVEMENT MARKINGS
02770a CONCRETE SIDEWALKS AND CURBS AND GUTTERS
02821a FENCING
02832 SEGMENTAL CONCRETE BLOCK RETAINING WALL
02921a SEEDING
02922a SODDING
02930a EXTERIOR PLANTING

DIVISION 03 - CONCRETE

03100a STRUCTURAL CONCRETE FORMWORK
03150a EXPANSION JOINTS, CONTRACTION JOINTS, AND WATERSTOPS
03200a CONCRETE REINFORCEMENT
03300 CAST-IN-PLACE STRUCTURAL CONCRETE

DIVISION 04 - MASONRY

04200a MASONRY

DIVISION 05 - METALS

05106 ROLLING COVER (CUSTOM FABRICATED)
05120 STRUCTURAL STEEL
05160 RETROFIT ROOF FRAMING SYSTEM
05210a STEEL JOISTS
05300a STEEL DECKING
05500a MISCELLANEOUS METAL

DIVISION 06 - WOODS & PLASTICS

06100a ROUGH CARPENTRY
06200a FINISH CARPENTRY
06410 CUSTOM CASEWORK

DIVISION 07 - THERMAL & MOISTURE PROTECTION

07131a ELASTOMERIC MEMBRANE WATERPROOFING
07416 STRUCTURAL STANDING SEAM METAL ROOF (SSSMR) SYSTEM
07510a BUILT-UP ROOFING
07600a SHEET METALWORK, GENERAL
07840a FIRESTOPPING
07900a JOINT SEALING

DIVISION 08 - DOORS & WINDOWS

08110 STEEL DOORS AND FRAMES
08210 WOOD DOORS
08520a ALUMINUM AND ENVIRONMENTAL CONTROL ALUMINUM WINDOWS
08700 BUILDERS' HARDWARE
08810a GLASS AND GLAZING

DIVISION 09 - FINISHES

09250A GYPSUM WALLBOARD
09310A CERAMIC TILE
09510A ACOUSTICAL CEILINGS
09650A RESILIENT FLOORING
09670A INDUSTRIAL RESIN-BASED FLOORING
09680A CARPET
09720 WALLCOVERINGS
09900 PAINTS AND COATINGS
09915 COLOR SCHEDULE
09965A PAINTING: SECONDARY CONTAINMENT (CONCRETE SLAB)
09971 EXTERIOR COATING OF STEEL STRUCTURES
09973 INTERIOR COATING OF WELDED STEEL PETROLEUM FUEL TANKS

DIVISION 10 - SPECIALTIES

10100A VISUAL COMMUNICATIONS SPECIALTIES
10160A TOILET PARTITIONS
10440A INTERIOR SIGNAGE
10500 LOCKERS
10800A TOILET ACCESSORIES

DIVISION 11 - EQUIPMENT

11310A PUMPS; SEWAGE SERVICE LIFT STATION 800 & W-900
11312N PACKAGE GRINDER PUMPLIFT STATION
11601N LABORATORY FUMEHOODS

DIVISION 12 - FURNISHINGS

12350A LAB CASEWORK
12490A WINDOW TREATMENT

DIVISION 13 - SPECIAL CONSTRUCTION

13080 FORCE PROTECTION FOR MISCELLANEOUS EQUIPMENT
13100A LIGHTNING PROTECTION SYSTEM
13110A CATHODIC PROTECTION SYSTEM (SACRIFICIAL ANODE)
13112A CATHODIC PROTECTION SYSTEM (IMPRESSED CURRENT)

13125 PRE-ENGINEERED METAL CANOPY
13280A ASBESTOS ABATEMENT
13286N HANDLING OF LIGHTING BALLASTS AND LAMPS CONTAINING PCBs AND MERCURY
13851A FIRE DETECTION AND ALARM SYSTEM, ADDRESSABLE
13930A WET PIPE SPRINKLER SYSTEM, FIRE PROTECTION

DIVISION 15 - MECHANICAL

15050 MECHANICAL EQUIPMENT, FUELING
15060 PIPE, MANUAL VALVES, AND FITTINGS, FUELING SYSTEM
15070A FORCE PROTECTION FOR MECHANICAL EQUIPMENT
15080A THERMAL INSULATION FOR MECHANICAL SYSTEMS
15101 CONTROL VALVES, FUELING SYSTEM
15140 PUMPS, FUELING SYSTEM
15176 FUEL STORAGE TANK AND COMPONENTS
15177 PETROLEUM TANK CLEANING
15190A GAS PIPING SYSTEMS
15400 PLUMBING, GENERAL PURPOSE
15569A WATER AND STEAM HEATING; OIL, GAS OR BOTH; UP TO 20 MBTUH
15650 CENTRAL REFRIGERATED AIR-CONDITIONING SYSTEM
15653 AIR-CONDITIONING SYSTEM (UNITARY TYPE)
15880 FILTER SEPARATOR, FUELING SYSTEM
15895A AIR SUPPLY, DISTRIBUTION, VENTILATION, AND EXHAUST SYSTEM
15899 SYSTEM START-UP, FUELING SYSTEM
15951A DIRECT DIGITAL CONTROL FOR HVAC
15970 PUMP CONTROL AND ANNUNCIATION SYSTEM
15990A TESTING, ADJUSTING, AND BALANCING OF HVAC SYSTEMS
15995A COMMISSIONING OF HVAC SYSTEMS

DIVISION 16 - ELECTRICAL

16070A FORCE PROTECTION FOR ELECTRICAL EQUIPMENT
16264 GFCI DIESEL-GENERATOR SET, STATIONARY 15-600 KW, STANDBY APPLICATIONS
16370A ELECTRICAL DISTRIBUTION SYSTEM, AERIAL
16375A ELECTRICAL DISTRIBUTION SYSTEM, UNDERGROUND
16415A ELECTRICAL WORK, INTERIOR
16528A EXTERIOR LIGHTING
16710A PREMISES DISTRIBUTION SYSTEM
16711A TELEPHONE SYSTEM, OUTSIDE PLANT

-- End of Project Table of Contents --

SECTION TABLE OF CONTENTS

DIVISION 03 - CONCRETE

SECTION 03100A

STRUCTURAL CONCRETE FORMWORK

05/98

PART 1 GENERAL

1.1 REFERENCES
1.2 SUBMITTALS
1.3 DESIGN

PART 2 PRODUCTS

2.1 FORM MATERIALS
2.1.1 Forms For Class B Finish
2.1.2 Forms For Class C Finish
2.1.3 Forms For Class D Finish
2.1.4 Form Ties
2.1.5 Form Releasing Agents

PART 3 EXECUTION

3.1 INSTALLATION
3.1.1 Formwork
3.2 CHAMFERING
3.3 COATING
3.4 REMOVAL OF FORMS

-- End of Section Table of Contents --

SECTION 03100A

STRUCTURAL CONCRETE FORMWORK
05/98

PART 1 GENERAL

1.1 REFERENCES

The publications listed below form a part of this specification to the extent referenced. The publications are referred to in the text by basic designation only.

ACI INTERNATIONAL (ACI)

ACI 347R	(1994) Guide to Formwork for Concrete

AMERICAN HARDBOARD ASSOCIATION (AHA)

AHA A135.4	(1995) Basic Hardboard

U.S. DEPARTMENT OF COMMERCE (DOC)

PS-1	(1996) Voluntary Product Standard - Construction and Industrial Plywood

1.2 SUBMITTALS

Government approval is required for submittals with a "G" designation; submittals not having a "G" designation are for information only. When used, a designation following the "G" designation identifies the office that will review the submittal for the Government. The following shall be submitted in accordance with Section 01330 SUBMITTAL PROCEDURES:

SD-02 Shop Drawings

Formwork; G-AE

Drawings showing details of formwork, including, joints, supports, studding and shoring, and sequence of form and shoring removal.

SD-03 Product Data

Design; G-AE

Design analysis and calculations for form design and methodology used in the design.

Form Materials

Manufacturer's data including literature describing form materials, accessories, and form releasing agents.

Form Releasing Agents

Manufacturer's recommendation on method and rate of application of form releasing agents.

1.3 DESIGN

Formwork shall be designed in accordance with methodology of ACI 347R for anticipated loads, lateral pressures, and stresses. Forms shall be capable of producing a surface which meets the requirements of the class of finish specified in Section 03300 CAST-IN-PLACE STRUCTURAL CONCRETE. Forms shall be capable of withstanding the pressures resulting from placement and vibration of concrete.

PART 2 PRODUCTS

2.1 FORM MATERIALS

2.1.1 Forms For Class B Finish

Forms for Class B finished surfaces shall be plywood panels conforming to PS-1, Grade B-B concrete form panels, Class I or II. Other form materials or liners may be used provided the smoothness and appearance of concrete produced will be equivalent to that produced by the plywood concrete form panels.

2.1.2 Forms For Class C Finish

Forms for Class C finished surfaces shall be shiplap lumber; plywood conforming to PS-1, Grade B-B concrete form panels, Class I or II; tempered concrete form hardboard conforming to AHA A135.4; other approved concrete form material; or steel, except that steel lining on wood sheathing shall not be used.

2.1.3 Forms For Class D Finish

Forms for Class D finished surfaces, except where concrete is placed against earth, shall be wood or steel or other approved concrete form material.

2.1.4 Form Ties

Form ties shall be factory-fabricated metal ties, shall be of the removable or internal disconnecting or snap-off type, and shall be of a design that will not permit form deflection and will not spall concrete upon removal. Solid backing shall be provided for each tie. Except where removable tie rods are used, ties shall not leave holes in the concrete surface less than 1/4 inch nor more than 1 inch deep and not more than 1 inchin diameter. Removable tie rods shall be not more than 1-1/2 inches in diameter.

Form ties used for the Fuel Tanks and the Fuel Valve Vault shall be fitted on both sides of the wall with cones which will form a void at least 1-1/2 inches deep and at least 1 inch in diameter at the surface in order to provide suitable space for damp-pack mortar. In lieu of this, at the Contractor's option, similar recesses may be formed by reaming with power tools as approved immediately after forms are removed. The ties used for these walls shall be fitted with integral water seals on the portion remaining within the wall. Form ties to be completely removed from the wall shall not be used for these walls.

2.1.5 Form Releasing Agents

Form releasing agents shall be commercial formulations that will not bond with, stain or adversely affect concrete surfaces. Agents shall not impair subsequent treatment of concrete surfaces depending upon bond or adhesion nor impede the wetting of surfaces to be cured with water or curing compounds.

PART 3 EXECUTION

3.1 INSTALLATION

3.1.1 Formwork

Forms shall be mortar tight, properly aligned and adequately supported to produce concrete surfaces meeting the surface requirements specified in Section 03300 CAST-IN-PLACE STRUCTURAL CONCRETE and conforming to construction tolerance given in TABLE 1. Where concrete surfaces are to have a Class B finish, joints in form panels shall be arranged as approved. Where forms for continuous surfaces are placed in successive units, the forms shall fit over the completed surface to obtain accurate alignment of the surface and to prevent leakage of mortar. Forms shall not be reused if there is any evidence of surface wear and tear or defects which would impair the quality of the surface. Surfaces of forms to be reused shall be cleaned of mortar from previous concreting and of all other foreign material before reuse. Form ties that are to be completely withdrawn shall be coated with a nonstaining bond breaker.

3.2 CHAMFERING

Except as otherwise shown, external corners that will be exposed shall be chamfered, beveled, or rounded by moldings placed in the forms. Corners to receive membrane waterproofing shal be chamfered as recommended by the waterproofing manufacturer.

3.3 COATING

Forms for Class B finished surfaces shall be coated with a form releasing agent before the form or reinforcement is placed in final position. The coating shall be used as recommended in the manufacturer's printed or written instructions. Forms for Class C and D finished surfaces may be wet with water in lieu of coating immediately before placing concrete, except that in cold weather with probable freezing temperatures, coating shall be mandatory. Surplus coating on form surfaces and coating on reinforcing steel and construction joints shall be removed before placing concrete.

3.4 REMOVAL OF FORMS

Forms shall be removed preventing injury to the concrete and ensuring the complete safety of the structure. Formwork for columns, walls, side of beams and other parts not supporting the weight of concrete may be removed when the concrete has attained sufficient strength to resist damage from the removal operation but not before at least 24 hours has elapsed since concrete placement. Supporting forms and shores shall not be removed from beams, floors and walls until the structural units are strong enough to carry their own weight and any other construction or natural loads. Supporting forms or shores shall not be removed before the concrete strength has reached 70 percent of design strength, as determined by field cured cylinders or other approved methods. This strength shall be demonstrated by job-cured test specimens, and by a structural analysis considering the proposed loads in relation to these test strengths and the strength of forming and shoring system. The job-cured test specimens for form removal purposes shall be provided in numbers as directed and shall be in addition to those required for concrete quality control. The specimens shall be removed from molds at the age of 24 hours and shall receive, insofar as possible, the same curing and protection as the structures they represent.

TABLE 1

TOLERANCES FOR FORMED SURFACES

1. Variations from the plumb:	In any 10 feet of length ---------- 1/4 inch
a. In the lines and surfaces of columns,	Maximum for entire length ---------- 1 inch

TABLE 1

TOLERANCES FOR FORMED SURFACES

piers, walls and in arises	
b. For exposed corner columns,control-joint grooves, and other conspicuous lines	In any 20 feet of length ---------- ---- 1/4 inch Maximum for entire length---------- 1/2 inch
2. Variation from the level or from the grades indicated on the drawings:	In any 10 feet of length ----------1/4 inch In any bay or in any 20 feet of length---------- 3/8 inch
a. In slab soffits, ceilings, beam soffits, and in arises, measured before removal of supporting shores	Maximum for entire length ---------- 3/4 inch
b. In exposed lintels, sills, parapets, horizontal grooves, and other conspicuous lines	In any bay or in any 20 feet of length ---------- ----- 1/4 inch Maximum for entire length---------- 1/2 inch
3. Variation of the linear building lines from established position in plan	In any 20 feet --------- 1/2 inch Maximum ----------1 inch
4. Variation of distance between walls, columns, partitions	1/4 inch per 10 feet of distance, but not more than 1/2 inch in any one bay,and not more than 1 inch total variation
5. Variation in the sizes and locations of sleeves, floor openings, and wall opening	Minus ---------- 1/4 inch Plus ---------- 1/2 inch
6. Variation in cross-sectional dimensions of columns and beams and in the thickness of slabs and walls	Minus ---------- 1/4 inch Plus ---------- 1/2 inch
7. Footings:	
a. Variation of dimensions in plan	Minus ---------- 1/2 inch Plus ---------- 2 inches when formed or plus 3 inches when placed against unformed excavation
b. Misplacement of eccentricity	2 percent of the footing width in the direction of misplacement but not more than 2 inches

TABLE 1

TOLERANCES FOR FORMED SURFACES

c. Reduction in thickness of specified thickness	Minus	5 percent
8. Variation in steps:	Riser	1/8 inch
a. In a flight of stairs	Tread	1/4 inch
b. In consecutive steps	Riser	1/16 inch
	Tread	1/8 inch

-- End of Section --

SECTION TABLE OF CONTENTS

DIVISION 03 - CONCRETE

SECTION 03150A

EXPANSION JOINTS, CONTRACTION JOINTS, AND WATERSTOPS

05/98

PART 1 GENERAL

1.1 REFERENCES
1.2 SUBMITTALS
1.3 DELIVERY AND STORAGE

PART 2 PRODUCTS

2.1 CONTRACTION JOINT STRIPS
2.2 PREFORMED EXPANSION JOINT FILLER
2.3 SEALANT
2.3.1 Field-Molded Type
2.3.2 Single Componenet Silicon Sealant
2.4 WATERSTOPS
2.4.1 Non-Metallic Materials

PART 3 EXECUTION

3.1 JOINTS
3.1.1 Contraction Joints
3.1.1.1 Joint Strips
3.1.1.2 Sawed Joints
3.1.2 Expansion Joints
3.1.3 Joint Sealant
3.1.3.1 Joints With Field-Molded Sealant
3.1.4 Perimeter Felt Joints
3.2 WATERSTOPS, INSTALLATION AND SPLICES
3.2.1 Non-Metallic
3.2.1.1 Polyvinyl Chloride Waterstop
3.2.1.2 Quality Assurance
3.3 CONSTRUCTION JOINTS

-- End of Section Table of Contents --

SECTION 03150A

EXPANSION JOINTS, CONTRACTION JOINTS, AND WATERSTOPS
05/98

PART 1 GENERAL

1.1 REFERENCES

The publications listed below form a part of this specification to the extent referenced. The publications are referred to in the text by basic designation only.

AMERICAN HARDBOARD ASSOCIATION (AHA)

AHA A135.4	(1995) Basic Hardboard

AMERICAN SOCIETY FOR TESTING AND MATERIALS (ASTM)

ASTM C 920	(1998) Elastomeric Joint Sealants
ASTM D 1751	(1999) Preformed Expansion Joint Filler for Concrete Paving and Structural Construction (Nonextruding and Resilient Bituminous Types)
ASTM D 1752	(1984; R 1996el) Preformed Sponge Rubber and Cork Expansion Joint Fillers for Concrete Paving and Structural Construction
ASTM D 5249	(1995) Backer Material for Use With Cold and Hot-Applied Joint Sealants in Portland-Cement Concrete and Asphalt Joints
ASTM D 5893	(1996) Cold Applied, Single Component Chemically Curing Silicon Joint Sealant for Portland Cement Concrete Pavement

U.S. ARMY CORPS OF ENGINEERS (USACE)

COE CRD-C 572	(1974) Corps of Engineers Specifications for Polyvinylchloride Waterstop

1.2 SUBMITTALS

Government approval is required for submittals with a "G" designation; submittals not having a "G" designation are for information only. When used, a designation following the "G" designation identifies the office that will review the submittal for the Government. The following shall be submitted in accordance with Section 01330 SUBMITTAL PROCEDURES:

SD-02 Shop Drawings

Waterstops; G-RE

Shop drawings and fabrication drawings provided by the manufacturer or prepared by the Contractor.

SD-03 Product Data

Preformed Expansion Joint Filler
Sealant
Waterstops

Manufacturer's literature, including safety data sheets, for preformed fillers; field-molded sealants and primers (when required by sealant manufacturer); and waterstops.

Manufacturer's recommended instructions for installing preformed fillers, field-molded sealants; and waterstops; and for splicing non-metallic waterstops.

SD-04 Samples

Field-Molded Type

One gallon of field-molded sealant and one quart of primer (when primer is recommended by the sealant manufacturer) identified to indicate manufacturer, type of material, quantity, and shipment or lot represented.

Non-metallic Materials

Specimens identified to indicate manufacturer, type of material, size, quantity of material, and shipment or lot represented. Each sample shall be a piece not less than 12 inch long cut from each 200 ft of finished waterstop furnished, but not less than a total of 4 ft of each type, size, and lot furnished. One splice sample of each size and type for every 50 splices made in the factory and every 10 splices made at the job site. The splice samples shall be made using straight run pieces with the splice located at the mid-length of the sample and finished as required for the installed waterstop. The total length of each splice shall be not less than 12 inches long.

SD-07 Certificates

Preformed Expansion Joint Filler
Sealant
Waterstops

Certificates of compliance stating that the joint filler and sealant materials and waterstops conform to the requirements specified.

1.3 DELIVERY AND STORAGE

Material delivered and placed in storage shall be stored off the ground and protected from moisture, dirt, and other contaminants. Sealants shall be delivered in the manufacturer's original unopened containers. Sealants whose shelf life has expired shall be removed from the site.

PART 2 PRODUCTS

2.1 CONTRACTION JOINT STRIPS

Contraction joint strips shall be 1/8 inch thick tempered hardboard conforming to AHA A135.4, Class 1. In lieu of hardboard strips, rigid polyvinylchloride (PVC) or high impact polystyrene (HIPS) insert strips specifically designed to induce controlled cracking in slabs on grade may be used. Such insert strips shall have removable top section.

2.2 PREFORMED EXPANSION JOINT FILLER

Expansion joint filler shall be preformed material conforming to ASTM D 1751or ASTM D 1752. Unless otherwise indicated, filler material shall be 3/8 inch thick and of a width applicable for the joint formed. Backer material, when required, shall conform to ASTM D 5249.

2.3 SEALANT

Joint sealant shall conform to the following:

2.3.1 Field-Molded Type

ASTM C 920, Type M for horizontal joints or Type NS for vertical joints, Class 25, and Use NT. Bond breaker material shall be polyethylene tape, coated paper, metal foil or similar type materials. The back-up material shall be compressible, non-shrink, nonreactive with sealant, and non-absorptive material type such as extruded butyl or polychloroprene rubber.

2.3.2 Single Componenet Silicon Sealant

ASTM D 5893.

2.4 WATERSTOPS

Intersection and change of direction waterstops shall be shop fabricated.

2.4.1 Non-Metallic Materials`

Non-metallic waterstops shall be manufactured from a prime virgin resin; reclaimed material is not acceptable. The compound shall contain plasticizers, stabilizers, and other additives to meet specified requirements. Polyvinylchloride waterstops shall conform to COE CRD-C 572.

PART 3 EXECUTION

3.1 JOINTS

Joints shall be installed at locations indicated and as authorized.

3.1.1 Contraction Joints

Contraction joints may be constructed by inserting tempered hardboard strips or rigid PVC or HIPS insert strips into the plastic concrete using a steel parting bar, when necessary, or by cutting the concrete with a saw after concrete has set. Joints shall be approximately 1/8 inch wide and shall extend into the slab one-fourth the slab thickness, minimum, but not less than 1 inch.

3.1.1.1 Joint Strips

Strips shall be of the required dimensions and as long as practicable. After the first floating, the concrete shall be grooved with a tool at the joint locations. The strips shall be inserted in the groove and depressed until the top edge of the vertical surface is flush with the surface of the slab. The slab shall be floated and finished as specified. Working of the concrete adjacent to the joint shall be the minimum necessary to fill voids and consolidate the concrete. Where indicated, the top portion of the strip shall be sawed out after the curing period to form a recess for sealer. The removable section of PVC or HIPS strips shall be discarded and the insert left in place. True alignment of the strips shall be maintained during insertion.

3.1.1.2 Sawed Joints

Joint sawing shall be early enough to prevent uncontrolled cracking in the slab,

but late enough that this can be accomplished without appreciable spalling. Concrete sawing machines shall be adequate in number and power, and with sufficient replacement blades to complete the sawing at the required rate. Joints shall be cut to true alignment and shall be cut in sequence of concrete placement. Sludge and cutting debris shall be removed.

3.1.2 Expansion Joints

Preformed expansion joint filler shall be used in expansion and isolation joints in slabs around columns and between slabs on grade and vertical surfaces where indicated. The filler shall extend the full slab depth, unless otherwise indicated. The edges of the joint shall be neatly finished with an edging tool of 1/8 inch radius, except where a resilient floor surface will be applied. Where the joint is to receive a sealant, the filler strips shall be installed at the proper level below the finished floor with a slightly tapered, dressed and oiled wood strip temporarily secured to the top to form a recess to the size shown on the drawings. The wood strip shall be removed after the concrete has set. Contractor may opt to use a removable expansion filler cap designed and fabricated for this purpose in lieu of the wood strip. The groove shall be thoroughly cleaned of laitance, curing compound, foreign materials, protrusions of hardened concrete, and any dust which shall be blown out of the groove with oil-free compressed air.

3.1.3 Joint Sealant

Sawed contraction joints and expansion joints in slabs shall be filled with joint sealant, unless otherwise shown. Joint surfaces shall be clean, dry, and free of oil or other foreign material which would adversely affect the bond between sealant and concrete. Joint sealant shall be applied as recommended by the manufacturer of the sealant.

3.1.3.1 Joints With Field-Molded Sealant

Construction joints, contraction joints and expansion joints in the Filter Building shall receive Single Componenet Silicon Sealant conforming to ASTM D 5893. All other joints shall receive sealant conforming to ASTM C 920.Joints shall not be sealed when the sealant material, ambient air, or concrete temperature is less than 40 degrees F. Joints requiring a bond breaker shall be coated with curing compound or with bituminous paint. Bond breaker and back-up material shall be installed where required. Joints shall be primed and filled flush with joint sealant in accordance with the manufacturer's recommendations.

3.1.4 Perimeter Felt Joints

Number 30 asphalt-saturated felt, extending for the full depth of the slab shall be used in construction joints between interior slabs-on-grade and vertical surfaces where indicated. The perimeters of the slabs shall be free of fins, rouigh edges, spalling, or other unsightly appearance.

3.2 WATERSTOPS, INSTALLATION AND SPLICES

Waterstops shall be installed at the locations shown to form a continuous water-tight diaphragm. Adequate provision shall be made to support and completely protect the waterstops during the progress of the work. Any waterstop punctured or damaged shall be repaired or replaced. Exposed waterstops shall be protected during application of form release agents to avoid being coated. Suitable guards shall be provided to protect exposed projecting edges and ends of partially embedded waterstops from damage when concrete placement has been discontinued. Splices shall be made by certified trained personnel using approved equipment and procedures.

3.2.1 Non-Metallic

Fittings shall be shop made using a machine specifically designed to mechanically weld the waterstop. A miter guide, proper fixturing (profile dependant), and portable power saw shall be used to miter cut the ends to be joined to ensure good alignment and contact between joined surfaces. The splicing of straight lengths shall be done by squaring the ends to be joined. Continuity of the characteristic features of the cross section of the waterstop (ribs, tabular center axis, protrusions, etc.) shall be maintained across the splice.

3.2.1.1 Polyvinyl Chloride Waterstop

Splices shall be made by heat sealing the adjacent waterstop edges together using a thermoplastic splicing iron utilizing a non-stick surface specifically designed for waterstop welding. The correct temperature shall be used to sufficiently melt without charring the plastic. The spliced area, when cooled, shall show no signs of separation, holes, or other imperfections when bent by hand in as sharp an angle as possible.

3.2.1.2 Quality Assurance

Edge welding will not be permitted. Centerbulbs shall be compressed or closed when welding to non-centerbulb type. Waterstop splicing defects which are unacceptable include, but are not limited to the following: 1) Tensile strength less than 80 percent of parent section. 2) Free lap joints. 3) Misalignment of centerbulb, ribs, and end bulbs greater than 1/16 inch. 4) Misalignment which reduces waterstop cross section more than 15 percent. 5) Bond failure at joint deeper than 1/16 inch or 15 percent of material thickness. 6) Misalignment of waterstop splice resulting in misalignment of waterstop in excess of 1/2 inch in 10 feet. 7) Visible porosity in the weld area, including pin holes. 8) Charred or burnt material. 9) Bubbles or inadequate bonding. 10) Visible signs of splice separation when cooled splice is bent by hand at a sharp angle.

3.3 CONSTRUCTION JOINTS

Construction joints are specified in Section 03300 CAST-IN-PLACE STRUCTURAL CONCRETE except that construction joints coinciding with expansion and contraction joints shall be treated as expansion or contraction joints as applicable.

-- End of Section --

SECTION TABLE OF CONTENTS

DIVISION 03 - CONCRETE

SECTION 03200A

CONCRETE REINFORCEMENT

09/97

PART 1 GENERAL

1.1 REFERENCES
1.2 SUBMITTALS
1.3 DELIVERY AND STORAGE

PART 2 PRODUCTS

2.1 DOWELS
2.2 FABRICATED BAR MATS
2.3 REINFORCING STEEL
2.4 WELDED WIRE FABRIC
2.5 WIRE TIES
2.6 SUPPORTS

PART 3 EXECUTION

3.1 REINFORCEMENT
3.1.1 Placement
3.1.2 Splicing
3.2 WELDED-WIRE FABRIC PLACEMENT
3.3 DOWEL INSTALLATION

-- End of Section Table of Contents --

SECTION 03200A

CONCRETE REINFORCEMENT
09/97

PART 1 GENERAL

1.1 REFERENCES

The publications listed below form a part of this specification to the extent referenced. The publications are referred to in the text by basic designation only.

ACI INTERNATIONAL (ACI)

ACI 318/318R	(1999) Building Code Requirements for Structural Concrete and Commentary

AMERICAN SOCIETY FOR TESTING AND MATERIALS (ASTM)

ASTM A 53	(1999) Pipe, Steel, Black and Hot-Dipped, Zinc-Coated, Welded and Seamless
ASTM A 184/A 184M	(1996) Fabricated Deformed Steel Bar Mats for Concrete Reinforcement
ASTM A 497	(1997) Steel Welded Wire Fabric, Deformed, for Concrete Reinforcement
ASTM A 615/A 615M	(2000) Deformed and Plain Billet-Steel Bars for Concrete Reinforcement
ASTM A 675/A 675M	(1990a; R 1995e1) Steel Bars, Carbon, Hot-Wrought, Special Quality, Mechanical Properties
ASTM A 706/A 706M	(1998) Low-Alloy Steel Deformed and Plain Bars for Concrete Reinforcement

CONCRETE REINFORCING STEEL INSTITUTE (CRSI)

CRSI MSP-1	(1996) Manual of Standard Practice

1.2 SUBMITTALS

Government approval is required for submittals with a "G" designation; submittals not having a "G" designation are for information only. When used, a designation following the "G" designation identifies the office that will review the submittal for the Government. The following shall be submitted in accordance with Section 01330 SUBMITTAL PROCEDURES:

SD-02 Shop Drawings

Reinforcement; G-AE

Detail drawings showing reinforcing steel placement, schedules, sizes, grades, and splicing and bending details. Drawings shall show support details including types, sizes and spacing.

SD-07 Certificates

Reinforcing Steel

Certified copies of mill reports attesting that the reinforcing steel furnished contains no less than 25 percent recycled scrap steel and meets the requirements specified herein, prior to the installation of reinforcing steel.

1.3 DELIVERY AND STORAGE

Reinforcement and accessories shall be stored off the ground on platforms, skids, or other supports.

PART 2 PRODUCTS

2.1 DOWELS

Dowels shall conform to ASTM A 675/A 675M, Grade 80. Steel pipe conforming to ASTM A 53, Schedule 80, may be used as dowels provided the ends are closed with metal or plastic inserts or with mortar.

2.2 FABRICATED BAR MATS

Fabricated bar mats shall conform to ASTM A 184/A 184M.

2.3 REINFORCING STEEL

Reinforcing steel shall be deformed bars conforming to ASTM A 615/A 615M or ASTM A 706/A 706M, grade 60 and sizes as indicated.

2.4 WELDED WIRE FABRIC

Welded wire fabric shall conform to ASTM A 497.

2.5 WIRE TIES

Wire ties shall be 16 gauge or heavier black annealed steel wire.

2.6 SUPPORTS

Bar supports for formed surfaces shall be designed and fabricated in accordance with CRSI MSP-1 and shall be steel or precast concrete blocks. Precast concrete blocks shall have wire ties and shall be not less than 4 inches square when supporting reinforcement on ground. Precast concrete block shall have compressive strength equal to that of the surrounding concrete. Where concrete formed surfaces will be exposed to weather or where surfaces are to be painted, steel supports within 1/2 inch of concrete surface shall be galvanized, plastic protected or of stainless steel. Concrete supports used in concrete exposed to view shall have the same color and texture as the finish surface. For slabs on grade, supports shall be precast concrete blocks, plastic coated steel fabricated with bearing plates, or specifically designed wire-fabric supports fabricated of plastic.

PART 3 EXECUTION

3.1 REINFORCEMENT

Reinforcement shall be fabricated to shapes and dimensions shown and shall conform to the requirements of ACI 318/318R. Reinforcement shall be cold bent unless otherwise authorized. Bending may be accomplished in the field or at the mill. Bars shall not be bent after embedment in concrete. Safety caps shall be

placed on all exposed ends of vertical concrete reinforcement bars that pose a danger to life safety. Wire tie ends shall face away from the forms.

3.1.1 Placement

Reinforcement shall be free from loose rust and scale, dirt, oil, or other deleterious coating that could reduce bond with the concrete. Reinforcement shall be placed in accordance with ACI 318/318R at locations shown plus or minus one bar diameter. Reinforcement shall not be continuous through expansion joints and shall be as indicated through construction or contraction joints. Concrete coverage shall be as indicated or as required by ACI 318/318R. If bars are moved more than one bar diameter to avoid interference with other reinforcement, conduits or embedded items, the resulting arrangement of bars, including additional bars required to meet structural requirements, shall be approved before concrete is placed.

3.1.2 Splicing

Splices of reinforcement shall conform to ACI 318/318R and shall be made only as required or indicated. Splicing shall be by lapping. Lapped bars shall not be spaced farther apart than one-fifth the required length of lap or 6 inches.

3.2 WELDED-WIRE FABRIC PLACEMENT

Welded-wire fabric shall be placed in slabs as indicated. Fabric placed in slabs on grade shall be continuous between expansion, construction, and contraction joints. Fabric placement at joints shall be as indicated. Lap splices shall be made in such a way that the overlapped area equals the distance between the outermost crosswires plus 2 inches. Laps shall be staggered to avoid continuous laps in either direction. Fabric shall be wired or clipped together at laps at intervals not to exceed 4 feet. Fabric shall be positioned by the use of supports.

3.3 DOWEL INSTALLATION

Dowels shall be installed in slabs on grade at locations indicated and at right angles to joint being doweled. Dowels shall be accurately positioned and aligned parallel to the finished concrete surface before concrete placement. Dowels shall be rigidly supported during concrete placement. One end of dowels shall be coated with a bond breaker.

-- End of Section --

SECTION TABLE OF CONTENTS

DIVISION 03 - CONCRETE

SECTION 03300

CAST-IN-PLACE STRUCTURAL CONCRETE

11/01

PART 1 GENERAL

1.1 REFERENCES
1.2 SUBMITTALS
1.3 QUALIFICATIONS
1.4 SPECIAL REQUIREMENTS
1.5 GENERAL REQUIREMENTS
1.5.1 Tolerances
1.5.1.1 Floors
1.5.1.2 Floors by the Straightedge System
1.5.2 Strength Requirements and w/c Ratio
1.5.2.1 Strength Requirements
1.5.2.2 Water-Cement Ratio
1.5.3 Air Entrainment
1.5.4 Slump
1.5.5 Concrete Temperature
1.5.6 Size of Coarse Aggregate
1.5.7 Special Properties and Products
1.5.8 Technical Service for Specialized Concrete
1.6 MIXTURE PROPORTIONS
1.6.1 Proportioning Studies for Normal Weight Concrete
1.6.2 Average Compressive Strength Required for Mixtures
1.6.2.1 Computations from Test Records
1.6.2.2 Computations without Previous Test Records
1.7 STORAGE OF MATERIALS
1.8 GOVERNMENT ASSURANCE INSPECTION AND TESTING
1.8.1 Materials
1.8.2 Fresh Concrete
1.8.3 Hardened Concrete
1.8.4 Inspection

PART 2 PRODUCTS

2.1 CEMENTITIOUS MATERIALS
2.1.1 Portland Cement
2.1.2 Pozzolan (Fly Ash)
2.2 AGGREGATES
2.2.1 Fine Aggregate
2.2.2 Coarse Aggregate
2.3 CHEMICAL ADMIXTURES
2.3.1 Air-Entraining Admixture
2.3.2 Water-Reducing or Retarding Admixture
2.3.3 High-Range Water Reducer
2.3.4 Surface Retarder
2.3.5 Expanding Admixture
2.3.6 Other Chemical Admixtures
2.4 CURING MATERIALS
2.4.1 Impervious-Sheet
2.4.2 Membrane-Forming Compound
2.4.3 Burlap and Cotton Mat

2.5 WATER
2.6 EMBEDDED ITEMS
2.7 FLOOR HARDENER
2.8 PERIMETER INSULATION
2.9 VAPOR BARRIER
2.10 JOINT MATERIALS
2.10.1 Joint Fillers, Sealers, and Waterstops
2.10.2 Contraction Joints in Slabs

PART 3 EXECUTION

3.1 PREPARATION FOR PLACING
3.1.1 Foundations
3.1.1.1 Concrete on Earth Foundations
3.1.1.2 Excavated Surfaces in Lieu of Forms
3.1.2 Previously Placed Concrete
3.1.2.1 Preparation of Previously Placed Concrete
3.1.3 Vapor Barrier
3.1.4 Perimeter Insulation
3.1.5 Embedded Items
3.2 CONCRETE PRODUCTION, SMALL PROJECTS
3.3 TRANSPORTING CONCRETE TO PROJECT SITE
3.4 CONVEYING CONCRETE ON SITE
3.4.1 Buckets
3.4.2 Transfer Hoppers
3.4.3 Trucks
3.4.4 Chutes
3.4.5 Belt Conveyors
3.4.6 Concrete Pumps
3.5 PLACING CONCRETE
3.5.1 Depositing Concrete
3.5.2 Consolidation
3.5.3 Cold Weather Requirements
3.5.4 Hot Weather Requirements
3.5.5 Prevention of Plastic Shrinkage Cracking
3.5.6 Placing Concrete in Congested Areas
3.5.7 Placing Flowable Concrete
3.6 JOINTS
3.6.1 Construction Joints
3.6.2 Contraction Joints in Slabs on Grade
3.6.3 Expansion Joints
3.6.4 Waterstops
3.6.5 Dowels
3.7 FINISHING FORMED SURFACES
3.7.1 Class B Finish
3.7.2 Class C and Class D Finish
3.8 REPAIRS
3.8.1 Damp-Pack Mortar Repair
3.8.2 Repair of Major Defects
3.8.2.1 Surface Application of Mortar Repair
3.8.2.2 Repair of Deep and Large Defects
3.9 FINISHING UNFORMED SURFACES
3.9.1 General
3.9.2 Rough Slab Finish
3.9.3 Floated Finish
3.9.4 Troweled Finish
3.9.5 Non-Slip Finish
3.9.5.1 Broomed
3.10 FLOOR HARDENER
3.11 CURING AND PROTECTION
3.11.1 General
3.11.2 Moist Curing
3.11.3 Membrane Forming Curing Compounds

3.11.4 Impervious Sheeting
3.11.5 Ponding or Immersion
3.11.6 Cold Weather Curing and Protection
3.12 SETTING BASE PLATES AND BEARING PLATES
3.12.1 Damp-Pack Bedding Mortar
3.12.2 Nonshrink Grout
3.12.2.1 Mixing and Placing of Nonshrink Grout
3.12.2.2 Treatment of Exposed Surfaces
3.13 TESTING AND INSPECTION FOR CONTRACTOR QUALITY CONTROL
3.13.1 Concrete Mixture
3.13.2 Inspection Before Placing
3.13.3 Placing
3.13.4 Vibrators
3.13.5 Curing Inspection
3.13.6 Cold-Weather Protection
3.13.7 Reports

-- End of Section Table of Contents --

SECTION 03300

CAST-IN-PLACE STRUCTURAL CONCRETE
11/01

PART 1 GENERAL

1.1 REFERENCES

The publications listed below form a part of this specification to the extent referenced. The publications are referred to in the text by basic designation only.

ACI INTERNATIONAL (ACI)

ACI 117/117R	(1990; Errata) Standard Tolerances for Concrete Construction and Materials
ACI 211.1	(1991) Standard Practice for Selecting Proportions for Normal, Heavyweight, and Mass Concrete
ACI 214.3R	(1988; R 1997) Simplified Version of the Recommended Practice for Evaluation of Strength Test Results of Concrete
ACI 301	(1999) Standard Specifications for Structural Concrete
ACI 305R	(1999) Hot Weather Concreting
ACI 318/318R	(1999) Building Code Requirements for Structural Concrete and Commentary

AMERICAN ASSOCIATION OF STATE HIGHWAY AND TRANSPORTATION OFFICIALS (AASHTO)

AASHTO M 182	(1991; R 1996) Burlap Cloth Made from Jute or Kenaf

AMERICAN SOCIETY FOR TESTING AND MATERIALS (ASTM)

ASTM C 1017/C 1017M	(1998) Chemical Admixtures for Use in Producing Flowing Concrete
ASTM C 1064/C 1064M	(1999) Temperature of Freshly Mixed Portland Cement Concrete
ASTM C 1077	(1998) Laboratories Testing Concrete and Concrete Aggregates for Use in Construction and Criteria for Laboratory Evaluation
ASTM C 143/C 143M	(2000) Slump of Hydraulic Cement Concrete
ASTM C 150	(1999a) Portland Cement
ASTM C 171	(1997a) Sheet Materials for Curing Concrete
ASTM C 172	(1999) Sampling Freshly Mixed Concrete

ASTM C 192/C 192M	(2000) Making and Curing Concrete Test Specimens in the Laboratory
ASTM C 231	(1997el) Air Content of Freshly Mixed Concrete by the Pressure Method
ASTM C 260	(2000) Air-Entraining Admixtures for Concrete
ASTM C 309	(1998a) Liquid Membrane-Forming Compounds for Curing Concrete
ASTM C 31/C 31M	(2000e1) Making and Curing Concrete Test Specimens in the Field
ASTM C 33	(1999ae1) Concrete Aggregates
ASTM C 39/C 39M	(2001) Compressive Strength of Cylindrical Concrete Specimens
ASTM C 42/C 42M	(1999) Obtaining and Testing Drilled Cores and Sawed Beams of Concrete
ASTM C 494/C 494M	(1999ae1) Chemical Admixtures for Concrete
ASTM C 552	(2000) Cellular Glass Thermal Insulation
ASTM C 578	(1995) Rigid, Cellular Polystyrene Thermal Insulation
ASTM C 591	(1994) Unfaced Preformed Rigid Cellular Polyisocyanurate Thermal Insulation
ASTM C 618	(2000) Coal Fly Ash and Raw or Calcined Natural Pozzolan for Use as a Mineral Admixture in Concrete
ASTM C 937	(1997) Grout Fluidifier for Preplaced-Aggregate Concrete
ASTM C 94/C 94M	(2000e2) Ready-Mixed Concrete
ASTM C 940	(1998a) Expansion and Bleeding of Freshly Mixed Grouts for Preplaced-Aggregate Concrete in the Laboratory
ASTM D 75	(1987; R 1997) Sampling Aggregates
ASTM E 96	(2000) Water Vapor Transmission of Materials

NATIONAL READY-MIXED CONCRETE ASSOCIATION (NRMCA)

NRMCA CPMB 100	(1996) Concrete Plant Standards \n/c\X
NRMCA QC 3	(1984) Quality Control Manual: Section 3, Plant Certifications Checklist: Certification of Ready Mixed Concrete Production Facilities
NRMCA TMMB 100	(1994) Truck Mixer Agitator and Front Discharge Concrete Carrier Standards

U.S. ARMY CORPS OF ENGINEERS (USACE)

COE CRD-C 400	(1963) Requirements for Water for Use in Mixing

	or Curing Concrete
COE CRD-C 521	(1981) Standard Test Method for Frequency and Amplitude of Vibrators for Concrete
COE CRD-C 94	(1995) Surface Retarders

1.2 SUBMITTALS

Government approval is required for submittals with a "G" designation; submittals not having a "G" designation are for information only. When used, a designation following the "G" designation identifies the office that will review the submittal for the Government. The following shall be submitted in accordance with Section 01330 SUBMITTAL PROCEDURES:

SD-03 Product Data

Mixture Proportions; G-AE

The results of trial mixture design studies along with a statement giving the maximum nominal coarse aggregate size and the proportions of ingredients that will be used in the manufacture of each strength or class of concrete, at least 14 days prior to commencing concrete placing operations. Aggregate weights shall be based on the saturated surface dry condition. The statement shall be accompanied by test results from an approved independent commercial testing laboratory, showing that mixture design studies have been made with materials proposed for the project and that the proportions selected will produce concrete of the qualities indicated. No substitutions shall be made in the materials used in the mixture design studies without additional tests to show that the quality of the concrete is satisfactory.

SD-06 Test Reports

Testing and Inspection for Contractor Quality Control

Certified copies of laboratory test reports, including mill tests and all other test data, for portland cement, pozzolan, admixtures, and curing compound proposed for use on this project.

SD-07 Certificates

Qualifications

Written documentation for Contractor Quality Control personnel.

1.3 QUALIFICATIONS

Contractor Quality Control personnel assigned to concrete construction shall be American Concrete Institute (ACI) Certified Workmen in one of the following grades or shall have written evidence of having completed similar qualification programs:

Concrete Field Testing Technician, Grade I
Concrete Laboratory Testing Technician, Grade I or II
Concrete Construction Inspector, Level II

Concrete Transportation Construction Inspector or
Reinforced Concrete Special Inspector, Jointly certified by American Concrete Institute (ACI), Building Official and Code Administrators International (BOCA), International Conference of Building Officials (ICBO), and Southern

Building Code Congress International (SBCCI).

The foreman or lead journeyman of the flatwork finishing crew shall have similar qualification for ACI Concrete Flatwork Technician/Finisher or equal, with written documentation.

1.4 SPECIAL REQUIREMENTS

A pre-installation meeting with the Contracting Officer will be required at least 10 days prior to start of construction. The Contractor shall be responsible for calling the meeting; the Project Superintendent and active installation personnel shall be present.

1.5 GENERAL REQUIREMENTS

1.5.1 Tolerances

Except as otherwise specified herein, tolerances for concrete batching, mixture properties, and construction as well as definition of terms and application practices shall be in accordance with ACI 117/117R. Level and grade tolerance measurements of slabs shall be made as soon as possible after finishing; when forms or shoring are used, the measurements shall be made prior to removal.

1.5.1.1 Floors

For the purpose of this Section the following terminology correlation between ACI 117/117R and this Section shall apply:

Floor Profile Quality Classification From ACI 117/117R	This Section
Conventional Bullfloated	Same
Conventional Straightedged	Same
Flat	Float Finish or Trowel Finish

Levelness tolerance shall not apply where design requires floors to be sloped to drains or sloped for other reasons.

1.5.1.2 Floors by the Straightedge System

The flatness of the floors shall be carefully controlled and the tolerances shall be measured by the straightedge system as specified in paragraph 4.5.7 of ACI 117/117R, using a 10 foot straightedge, within 72 hours after floor slab installation and before shores and/or forms are removed. The listed tolerances shall be met at any and every location at which the straightedge can be placed. See paragraph "FINISHING UNFORMED SURFACES" for slab finish requirements.

Bullfloated	1/2 inch
Straightedged	5/16 inch
Float Finish	3/16 inch
Trowel Finish	3/16 inch

1.5.2 Strength Requirements and w/c Ratio

1.5.2.1 Strength Requirements

Specified compressive strength (f'c) shall be as follows:

COMPRESSIVE STRENGTH	STRUCTURE OR PORTION OF STRUCTURE
4000 psi at 28 days	Storage Tanks and Pumphouses, Fuel Valve Vaults
3000 psi at 28 days	All other work

COMPRESSIVE STRENGTH STRUCTURE OR PORTION OF STRUCTURE

a. Evaluation of Concrete Compressive Strength. Compressive strength specimens (6 by 12 inch cylinders) shall be fabricated by the Contractor and laboratory cured in accordance with ASTM C 31/C 31M and tested in accordance with ASTM C 39/C 39M. The strength of the concrete will be considered satisfactory so long as the average of all sets of three consecutive test results equals or exceeds the specified compressive strength f'c and no individual test result falls below the specified strength f'c by more than 500 psi. A "test" is defined as the average of two companion cylinders, or if only one cylinder is tested, the results of the single cylinder test. Additional analysis or testing, including taking cores and/or load tests may be required at the Contractor's expense when the strength of the concrete in the structure is considered potentially deficient.

b. Investigation of Low-Strength Compressive Test Results. When any strength test of standard-cured test cylinders falls below the specified strength requirement by more than 500 psi or if tests of field-cured cylinders indicate deficiencies in protection and curing, steps shall be taken to assure that the load-carrying capacity of the structure is not jeopardized. When the strength of concrete in place is considered potentially deficient, cores shall be obtained and tested in accordance with ASTM C 42/C 42M. At least three representative cores shall be taken from each member or area of concrete in place that is considered potentially deficient. The location of cores will be determined by the Contracting Officer to least impair the strength of the structure. Concrete in the area represented by the core testing will be considered adequate if the average strength of the cores is equal to at least 85 percent of the specified strength requirement and if no single core is less than 75 percent of the specified strength requirement. Non-destructive tests (tests other than test cylinders or cores) shall not be used as a basis for acceptance or rejection. The Contractor shall perform the coring and repair the holes. Cores will be tested by the Government.

c. Load Tests. If the core tests are inconclusive or impractical to obtain or if structural analysis does not confirm the safety of the structure, load tests may be directed by the Contracting Officer in accordance with the requirements of ACI 318/318R. Concrete work evaluated by structural analysis or by results of a load test as being understrength shall be corrected in a manner satisfactory to the Contracting Officer. All investigations, testing, load tests, and correction of deficiencies shall be performed by and at the expense of the Contractor and must be approved by the Contracting Officer, except that if all concrete is found to be in compliance with the drawings and specifications, the cost of investigations, testing, and load tests will be at the expense of the Government.

1.5.2.2 Water-Cement Ratio

Maximum water-cement ratio (w/c) for normal weight concrete shall be 0.45.

These w/c's may cause higher strengths than that required above for compressive or flexural strength. The maximum w/c required will be the equivalent w/c as determined by conversion from the weight ratio of water to cement plus pozzolan by the weight equivalency method as described in ACI 211.1.

1.5.3 Air Entrainment

All normal weight concrete shall be air entrained to contain between 4 and 7 percent total air, except that when the nominal maximum size coarse aggregate is

3/4 inch or smaller it shall be between 4.5 and 7.5 percent. Specified air content shall be attained at point of placement into the forms. Air content for normal weight concrete shall be determined in accordance with ASTM C 231.

1.5.4 Slump

Slump of the concrete, as delivered to the point of placement into the forms, shall be within the following limits. Slump shall be determined in accordance with ASTM C 143/C 143M.

Structural Element	Slump Minimum	Slump Maximum
Walls, columns and beams	2 in.	4 in.
Foundation walls, substructure walls, footings, slabs	1 in.	4 in.
Any structural concrete approved for placement by pumping:		
At pump	2 in.	6 in.
At discharge of line	2 in.	5 in.

When use of a plasticizing admixture conforming to ASTM C 1017/C 1017M or when a Type F or G high range water reducing admixture conforming to ASTM C 494/C 494M is permitted to increase the slump of concrete, concrete shall have a slump of 2 to 4 inches before the admixture is added and a maximum slump of 8 inches at the point of delivery after the admixture is added.

1.5.5 Concrete Temperature

The temperature of the concrete as delivered shall not exceed 90 degrees F. When the ambient temperature during placing is 40 degrees F or less, or is expected to be at any time within 6 hours after placing, the temperature of the concrete as delivered shall be between 55 and 75 degrees F.

1.5.6 Size of Coarse Aggregate

The largest feasible nominal maximum size aggregate (NMSA) specified in paragraph AGGREGATES shall be used in each placement. However, nominal maximum size of aggregate shall not exceed any of the following: three-fourths of the minimum cover for reinforcing bars, three-fourths of the minimum clear spacing between reinforcing bars, one-fifth of the narrowest dimension between sides of forms, or one-third of the thickness of slabs or toppings.

1.5.7 Special Properties and Products

Concrete may contain admixtures other than air entraining agents, such as water reducers, superplasticizers, or set retarding agents to provide special properties to the concrete, if specified or approved. Any of these materials to be used on the project shall be used in the mix design studies.

1.5.8 Technical Service for Specialized Concrete

The services of a factory trained technical representative shall be obtained to oversee proportioning, batching, mixing, placing, consolidating, and finishing of specialized structural concrete. The technical representative shall be on the job full time until the Contracting Officer is satisfied that field controls indicate concrete of specified quality is furnished and that the Contractor's crews are capable of continued satisfactory work. The technical representative shall be available for consultation with, and advice to, Government forces.

1.6 MIXTURE PROPORTIONS

Concrete shall be composed of portland cement, other cementitious and pozzolanic materials as specified, aggregates, water and admixtures as specified.

1.6.1 Proportioning Studies for Normal Weight Concrete

Trial design batches, mixture proportioning studies, and testing requirements for various classes and types of concrete specified shall be the responsibility of the Contractor. Mixture proportions shall be based on compressive strength as determined by test specimens fabricated in accordance with ASTM C 192/C 192M and tested in accordance with ASTM C 39/C 39M. Samples of all materials used in mixture proportioning studies shall be representative of those proposed for use in the project and shall be accompanied by the manufacturer's or producer's test reports indicating compliance with these specifications. Trial mixtures having proportions, consistencies, and air content suitable for the work shall be made based on methodology described in ACI 211.1, using at least three different water-cement ratios for each type of mixture, which will produce a range of strength encompassing those required for each class and type of concrete required on the project. The maximum water-cement ratios required in subparagraph Water-Cement Ratio will be the equivalent water-cement ratio as determined by conversion from the weight ratio of water to cement plus pozzolan by the weight equivalency method as described in ACI 211.1. If pozzolan is used in the concrete mixture, the minimum pozzolan content shall be 15 percent by weight of the total cementitious material, and the maximum shall be 35 percent. Laboratory trial mixtures shall be designed for maximum permitted slump and air content. Separate sets of trial mixture studies shall be made for each combination of cementitious materials and each combination of admixtures proposed for use. No combination of either shall be used until proven by such studies, except that, if approved in writing and otherwise permitted by these specifications, an accelerator or a retarder may be used without separate trial mixture study. Separate trial mixture studies shall also be made for concrete for any conveying or placing method proposed which requires special properties and for concrete to be placed in unusually difficult placing locations. The temperature of concrete in each trial batch shall be reported. For each water-cement ratio, at least three test cylinders for each test age shall be made and cured in accordance withASTM C 192/C 192M. They shall be tested at 7 and 28 days in accordance with ASTM C 39/C 39M. From these test results, a curve shall be plotted showing the relationship between water-cement ratio and strength for each set of trial mix studies. In addition, a curve shall be plotted showing the relationship between 7 day and 28 day strengths. Each mixture shall be designed to promote easy and suitable concrete placement, consolidation and finishing, and to prevent segregation and excessive bleeding.

1.6.2 Average Compressive Strength Required for Mixtures

The mixture proportions selected during mixture design studies shall produce a required average compressive strength (f'cr) exceeding the specified compressive strength (f'c) by the amount indicated below. This required average compressive strength, f'cr, will not be a required acceptance criteria during concrete production. However, whenever the daily average compressive strength at 28 days drops below f'cr during concrete production, or daily average 7-day strength drops below a strength correlated with the 28-day f'cr, the mixture shall be adjusted, as approved, to bring the daily average back up to f'cr. During production, the required f'cr shall be adjusted, as appropriate, based on the standard deviation being attained on the job.

1.6.2.1 Computations from Test Records

Where a concrete production facility has test records, a standard deviation shall be established in accordance with the applicable provisions of ACI 214.3R.

Test records from which a standard deviation is calculated shall represent materials, quality control procedures, and conditions similar to those expected; shall represent concrete produced to meet a specified strength or strengths (f'c) within 1,000 psi of that specified for proposed work; and shall consist of at least 30 consecutive tests. A strength test shall be the average of the strengths of two cylinders made from the same sample of concrete and tested at 28 days. Required average compressive strength f'cr used as the basis for selection of concrete proportions shall be the larger of the equations that follow using the standard deviation as determined above:

f'cr = f'c + 1.34S where units are in psi

f'cr = f'c + 2.33S - 500 where units are in psi

Where S = standard deviation

Where a concrete production facility does not have test records meeting the requirements above but does have a record based on 15 to 29 consecutive tests, a standard deviation shall be established as the product of the calculated standard deviation and a modification factor from the following table:

NUMBER OF TESTS	MODIFICATION FACTOR FOR STANDARD DEVIATION
15	1.16
20	1.08
25	1.03
30 or more	1.00

1.6.2.2 Computations without Previous Test Records

When a concrete production facility does not have sufficient field strength test records for calculation of the standard deviation, the required average strength f'cr shall be determined as follows:

a. If the specified compressive strength f'c is less than 3,000 psi,

f'cr = f'c + 1000 psi

b. If the specified compressive strength f'c is 3,000 to 5,000 psi,

f'cr = f'c + 1,200 psi

c. If the specified compressive strength f'c is over 5,000 psi,

f'cr = f'c + 1,400 psi

1.7 STORAGE OF MATERIALS

Cement and other cementitious materials shall be stored in weathertight buildings, bins, or silos which will exclude moisture and contaminants and keep each material completely separated. Aggregate stockpiles shall be arranged and used in a manner to avoid excessive segregation and to prevent contamination with other materials or with other sizes of aggregates. Aggregate shall not be stored directly on ground unless a sacrificial layer is left undisturbed. Reinforcing bars and accessories shall be stored above the ground on platforms, skids or other supports. Other materials shall be stored in such a manner as to avoid contamination and deterioration. Admixtures which have been in storage at the project site for longer than 6 months or which have been subjected to freezing shall not be used unless retested and proven to meet the specified requirements. Materials shall be capable of being accurately identified after bundles or containers are opened.

1.8 GOVERNMENT ASSURANCE INSPECTION AND TESTING

Day-to day inspection and testing shall be the responsibility of the Contractor Quality Control (CQC) staff. However, representatives of the Contracting Officer can and will inspect construction as considered appropriate and will monitor operations of the Contractor's CQC staff. Government inspection or testing will not relieve the Contractor of any of his CQC responsibilities.

1.8.1 Materials

The Government will sample and test aggregates, cementitious materials, other materials, and concrete to determine compliance with the specifications as considered appropriate. The Contractor shall provide facilities and labor as may be necessary for procurement of representative test samples. Samples of aggregates will be obtained at the point of batching in accordance with ASTM D 75. Other materials will be sampled from storage at the jobsite or from other locations as considered appropriate. Samples may be placed in storage for later testing when appropriate.

1.8.2 Fresh Concrete

Fresh concrete will be sampled as delivered in accordance with ASTM C 172 and tested in accordance with these specifications, as considered necessary.

1.8.3 Hardened Concrete

Tests on hardened concrete will be performed by the Government when such tests are considered necessary.

1.8.4 Inspection

Concrete operations may be tested and inspected by the Government as the project progresses. Failure to detect defective work or material will not prevent rejection later when a defect is discovered nor will it obligate the Government for final acceptance.

PART 2 PRODUCTS

2.1 CEMENTITIOUS MATERIALS

Cementitious Materials shall be portland cement, portland-pozzolan cement, portland blast-furnace slag cement, or portland cement in combination with pozzolan and shall conform to appropriate specifications listed below. Use of cementitious materials in concrete which will have surfaces exposed in the completed structure shall be restricted so there is no change in color, source, or type of cementitious material.

2.1.1 Portland Cement

ASTM C 150, Type I low alkali with a maximum 15 percent amount of tricalcium aluminate, or Type II low alkali including false set requirements or Type V.

2.1.2 Pozzolan (Fly Ash)

ASTM C 618, Class C or F with the optional requirements for multiple factor, drying shrinkage, and uniformity from Table 2A of ASTM C 618. Requirement for maximum alkalies from Table 1A of ASTM C 618 shall apply. If pozzolan is used, it shall never be less than 15 percent nor more than 35 percent by weight of the total cementitious material. The Contractor shall comply with EPA requirements in accordance with Section 01670 RECYCLED / RECOVERED MATERIALS.

2.2 AGGREGATES

Aggregates shall conform to the following.

2.2.1 Fine Aggregate

Fine aggregate shall conform to the quality and gradation requirements of ASTM C 33.

2.2.2 Coarse Aggregate

Coarse aggregate shall conform to ASTM C 33, Class 5S, size designation 67.

2.3 CHEMICAL ADMIXTURES

Chemical admixtures, when required or permitted, shall conform to the appropriate specification listed. Admixtures shall be furnished in liquid form and of suitable concentration for easy, accurate control of dispensing.

2.3.1 Air-Entraining Admixture

ASTM C 260 and shall consistently entrain the air content in the specified ranges under field conditions.

2.3.2 Water-Reducing or Retarding Admixture

ASTM C 494/C 494M, Type A, B, or D, except that the 6-month and 1-year compressive and flexural strength tests are waived.

2.3.3 High-Range Water Reducer

ASTM C 494/C 494M, Type F or G, except that the 6-month and 1-year strength requirements are waived. The admixture shall be used only when approved in writing, such approval being contingent upon particular mixture control as described in the Contractor's Quality Control Plan and upon performance of separate mixture design studies.

2.3.4 Surface Retarder

COE CRD-C 94.

2.3.5 Expanding Admixture

Aluminum powder type expanding admixture conforming to ASTM C 937.

2.3.6 Other Chemical Admixtures

Chemical admixtures for use in producing flowing concrete shall comply with ASTM C 1017/C 1017M, Type I or II. These admixtures shall be used only when approved in writing, such approval being contingent upon particular mixture control as described in the Contractor's Quality Control Plan and upon performance of separate mixture design studies.

2.4 CURING MATERIALS

2.4.1 Impervious-Sheet

Impervious-sheet materials shall conform to ASTM C 171, type optional, except, that polyethylene sheet shall not be used.

2.4.2 Membrane-Forming Compound

Membrane-Forming curing compound shall conform to ASTM C 309, Type 1-D or 2, except that only a styrene acrylate or chlorinated rubber compound meeting Class B requirements shall be used for surfaces that are to be painted or are to

receive bituminous roofing, or waterproofing, or floors that are to receive adhesive applications of resilient flooring. The curing compound selected shall be compatible with any subsequent paint, roofing, waterproofing, or flooring specified. Nonpigmented compound shall contain a fugitive dye, and shall have the reflective requirements in ASTM C 309 waived.

2.4.3 Burlap and Cotton Mat

Burlap and cotton mat used for curing shall conform to AASHTO M 182.

2.5 WATER

Water for mixing and curing shall be fresh, clean, potable, and free of injurious amounts of oil, acid, salt, or alkali, except that non-potable water may be used if it meets the requirements of COE CRD-C 400.

2.6 EMBEDDED ITEMS

Embedded items shall be of the size and type indicated or as needed for the application. Dovetail slots shall be galvanized steel. Hangers for suspended ceilings shall be as specified in Section 09510A ACOUSTICAL CEILINGS. Inserts for shelf angles and bolt hangers shall be of malleable iron or cast or wrought steel.

2.7 FLOOR HARDENER

Floor hardener shall be a colorless aqueous solution containing zinc silicofluoride, magnesium silicofluoride, or sodium silicofluoride. These silicofluorides can be used individually or in combination. Proprietary hardeners may be used if approved in writing by the Contracting Officer.

2.8 PERIMETER INSULATION

Perimeter insulation shall be polystyrene conforming to ASTM C 578, Type II; polyurethane conforming to ASTM C 591, Type II; or cellular glass conforming to ASTM C 552, Type I or IV. The Contractor shall comply with EPA requirements in accordance with Section 01670 RECYCLED / RECOVERED MATERIALS.

2.9 VAPOR BARRIER

Vapor barrier shall be polyethylene sheeting with a minimum thickness of 6 mils or other equivalent material having a vapor permeance rating not exceeding 0.5 perms as determined in accordance with ASTM E 96.

2.10 JOINT MATERIALS

2.10.1 Joint Fillers, Sealers, and Waterstops

Materials for joint fillers, sealers, and waterstops shall be in accordance with Section 03150a EXPANSION JOINTS, CONTRACTION JOINTS, AND WATERSTOPS.

2.10.2 Contraction Joints in Slabs

Materials for joint fillers, sealers, and waterstops shall be in accordance with Section 03150a EXPANSION JOINTS, CONTRACTION JOINTS, AND WATERSTOPS.

PART 3 EXECUTION

3.1 PREPARATION FOR PLACING

Before commencing concrete placement, the following shall be performed. Surfaces to receive concrete shall be clean and free from frost, ice, mud, and water. Forms shall be in place, cleaned, coated, and adequately supported, in

accordance with Section 03100a STRUCTURAL CONCRETE FORMWORK. Reinforcing steel shall be in place, cleaned, tied, and adequately supported, in accordance with Section 03200a CONCRETE REINFORCEMENT. Transporting and conveying equipment shall be in-place, ready for use, clean, and free of hardened concrete and foreign material. Equipment for consolidating concrete shall be at the placing site and in proper working order. Equipment and material for curing and for protecting concrete from weather or mechanical damage shall be at the placing site, in proper working condition and in sufficient amount for the entire placement. When hot, windy conditions during concreting appear probable, equipment and material shall be at the placing site to provide windbreaks, shading, fogging, or other action to prevent plastic shrinkage cracking or other damaging drying of the concrete.

3.1.1 Foundations

3.1.1.1 Concrete on Earth Foundations

Earth (subgrade, base, or subbase courses) surfaces upon which concrete is to be placed shall be clean, damp, and free from debris, frost, ice, and standing or running water. Prior to placement of concrete, the foundation shall be well drained and shall be satisfactorily graded and uniformly compacted.

3.1.1.2 Excavated Surfaces in Lieu of Forms

Concrete for footings may be placed directly against the soil provided the earth has been carefully trimmed, is uniform and stable, and meets the compaction requirements of Section 02315a EXCAVATION, FILLING, AND BACKFILLING FOR BUILDINGS. The concrete shall be placed without becoming contaminated by loose material, and the outline of the concrete shall be within the specified tolerances.

3.1.2 Previously Placed Concrete

3.1.2.1 Preparation of Previously Placed Concrete

Concrete surfaces to which other concrete is to be bonded shall be abraded in an approved manner that will expose sound aggregate uniformly without damaging the concrete. Laitance and loose particles shall be removed. Surfaces shall be thoroughly washed and shall be moist but without free water when concrete is placed.

3.1.3 Vapor Barrier

Vapor barrier shall be provided beneath the interior on-grade concrete floor slabs. The greatest widths and lengths practicable shall be used to eliminate joints wherever possible. Joints shall be lapped a minimum of 12 inches. Torn, punctured, or damaged vapor barrier material shall be removed and new vapor barrier shall be provided prior to placing concrete. For minor repairs, patches may be made using laps of at least 12 inches. Lapped joints shall be sealed and edges patched with pressure-sensitive adhesive or tape not less than 2 inches wide and compatible with the membrane. Vapor barrier shall be placed directly on underlying subgrade, base course, or capillary water barrier, unless it consists of crushed material or large granular material which could puncture the vapor barrier. In this case, the surface shall be choked with a light layer of sand, as approved, before placing the vapor barrier. Concrete placement shall be controlled so as to prevent damage to the vapor barrier.

3.1.4 Perimeter Insulation

Perimeter insulation shall be installed at locations indicated. Adhesive shall be used where insulation is applied to the interior surface of foundation walls and may be used for exterior application.

3.1.5 Embedded Items

Before placement of concrete, care shall be taken to determine that all embedded items are firmly and securely fastened in place as indicated on the drawings, or required. Conduit and other embedded items shall be clean and free of oil and other foreign matter such as loose coatings or rust, paint, and scale. The embedding of wood in concrete will be permitted only when specifically authorized or directed. Voids in sleeves, inserts, and anchor slots shall be filled temporarily with readily removable materials to prevent the entry of concrete into voids. Welding shall not be performed on embedded metals within 1 feet of the surface of the concrete. Tack welding shall not be performed on or to embedded items.

3.2 CONCRETE PRODUCTION, SMALL PROJECTS

Batch-type equipment shall be used for producing concrete. Ready-mixed concrete shall be batched, mixed, and transported in accordance with ASTM C 94/C 94M, except as otherwise specified. Truck mixers shall comply with NRMCA TMMB 100. Ready-mix plant equipment and facilities shall be certified in accordance with NRMCA QC 3. Approved batch tickets shall be furnished for each load of ready-mixed concrete. Site-mixed concrete shall be produced in accordance with ACI 301, and plant shall conform to NRMCA CPMB 100.

3.3 TRANSPORTING CONCRETE TO PROJECT SITE

Concrete shall be transported to the placing site in truck mixers.

3.4 CONVEYING CONCRETE ON SITE

Concrete shall be conveyed from mixer or transporting unit to forms as rapidly as possible and within the time interval specified by methods which will prevent segregation or loss of ingredients using following equipment. Conveying equipment shall be cleaned before each placement.

3.4.1 Buckets

The interior hopper slope shall be not less than 58 degrees from the horizontal, the minimum dimension of the clear gate opening shall be at least 5 times the nominal maximum-size aggregate, and the area of the gate opening shall not be less than 2 square feet.The maximum dimension of the gate opening shall not be greater than twice the minimum dimension. The bucket gates shall be essentially grout tight when closed and may be manually, pneumatically, or hydraulically operated except that buckets larger than 2 cubic yardsshall not be manually operated. The design of the bucket shall provide means for positive regulation of the amount and rate of deposit of concrete in each dumping position.

3.4.2 Transfer Hoppers

Concrete may be charged into nonagitating hoppers for transfer to other conveying devices. Transfer hoppers shall be capable of receiving concrete directly from delivery vehicles and shall have conical-shaped discharge features. The transfer hopper shall be equipped with a hydraulically operated gate and with a means of external vibration to effect complete discharge. Concrete shall not be held in nonagitating transfer hoppers more than 30 minutes.

3.4.3 Trucks

Truck mixers operating at agitating speed or truck agitators used for transporting plant-mixed concrete shall conform to the requirements of ASTM C 94/C 94M. Nonagitating equipment shall be used only for transporting plant-mixed concrete over a smooth road and when the hauling time is less than 15 minutes. Bodies of nonagitating equipment shall be smooth, watertight,

metal containers specifically designed to transport concrete, shaped with rounded corners to minimize segregation, and equipped with gates that will permit positive control of the discharge of the concrete.

3.4.4 Chutes

When concrete can be placed directly from a truck mixer, agitator, or nonagitating equipment, the chutes normally attached to this equipment by the manufacturer may be used. A discharge deflector shall be used when required by the Contracting Officer. Separate chutes and other similar equipment will not be permitted for conveying concrete.

3.4.5 Belt Conveyors

Belt conveyors shall be designed and operated to assure a uniform flow of concrete from mixer to final place of deposit without segregation of ingredients or loss of mortar and shall be provided with positive means, such as discharge baffle or hopper , for preventing segregation of the concrete at the transfer points and the point of placing. Belt conveyors shall be constructed such that the idler spacing shall not exceed 36 inches. The belt speed shall be a minimum of 300 feet per minute and a maximum of 750 feet per minute. If concrete is to be placed through installed horizontal or sloping reinforcing bars, the conveyor shall discharge concrete into a pipe or elephant truck that is long enough to extend through the reinforcing bars.

3.4.6 Concrete Pumps

Concrete may be conveyed by positive displacement pump when approved. The pumping equipment shall be piston or squeeze pressure type; pneumatic placing equipment shall not be used. The pipeline shall be rigid steel pipe or heavy-duty flexible hose. The inside diameter of the pipe shall be at least 3 times the nominal maximum-size coarse aggregate in the concrete mixture to be pumped but not less than 4 inches. Aluminum pipe shall not be used.

3.5 PLACING CONCRETE

Mixed concrete shall be discharged within 1-1/2 hours or before the mixer drum has revolved 300 revolutions, whichever comes first after the introduction of the mixing water to the cement and aggregates. When the concrete temperature exceeds 85 degrees F, the time shall be reduced to 45 minutes. Concrete shall be placed within 15 minutes after it has been discharged from the transporting unit. Concrete shall be handled from mixer or transporting unit to forms in a continuous manner until the approved unit of operation is completed. Adequate scaffolding, ramps and walkways shall be provided so that personnel and equipment are not supported by in-place reinforcement. Placing will not be permitted when the sun, heat, wind, or limitations of facilities furnished by the Contractor prevent proper consolidation, finishing and curing. Sufficient placing capacity shall be provided so that concrete can be kept free of cold joints.

3.5.1 Depositing Concrete

Concrete shall be deposited as close as possible to its final position in the forms, and there shall be no vertical drop greater than 5 feet except where suitable equipment is provided to prevent segregation and where specifically authorized. Depositing of the concrete shall be so regulated that it will be effectively consolidated in horizontal layers not more than 12 inches thick, except that all slabs shall be placed in a single layer. Concrete to receive other construction shall be screeded to the proper level. Concrete shall be deposited continuously in one layer or in layers so that fresh concrete is deposited on in-place concrete that is still plastic. Fresh concrete shall not be deposited on concrete that has hardened sufficiently to cause formation of seams or planes of weakness within the section. Concrete that has surface

dried, partially hardened, or contains foreign material shall not be used. When temporary spreaders are used in the forms, the spreaders shall be removed as their service becomes unnecessary. Concrete shall not be placed in slabs over columns and walls until concrete in columns and walls has been in-place at least two hours or until the concrete begins to lose its plasticity. Concrete for beams, girders, brackets, column capitals, haunches, and drop panels shall be placed at the same time as concrete for adjoining slabs.

3.5.2 Consolidation

Immediately after placing, each layer of concrete shall be consolidated by internal vibrators, except for slabs 4 inches thick or less. The vibrators shall at all times be adequate in effectiveness and number to properly consolidate the concrete; a spare vibrator shall be kept at the jobsite during all concrete placing operations. The vibrators shall have a frequency of not less than 10,000 vibrations per minute, an amplitude of at least 0.025 inch, and the head diameter shall be appropriate for the structural member and the concrete mixture being placed. Vibrators shall be inserted vertically at uniform spacing over the area of placement. The distance between insertions shall be approximately 1-1/2 times the radius of action of the vibrator so that the area being vibrated will overlap the adjacent just-vibrated area by a reasonable amount. The vibrator shall penetrate rapidly to the bottom of the layer and at least 6 inches into the preceding layer if there is such. Vibrator shall be held stationary until the concrete is consolidated and then vertically withdrawn slowly while operating. Form vibrators shall not be used unless specifically approved and unless forms are constructed to withstand their use. Vibrators shall not be used to move concrete within the forms. Slabs 4 inches and less in thickness shall be consolidated by properly designed vibrating screeds or other approved technique. Frequency and amplitude of vibrators shall be determined in accordance with COE CRD-C 521. Grate tampers ("jitterbugs") shall not be used.

3.5.3 Cold Weather Requirements

Special protection measures, approved by the Contracting Officer, shall be used if freezing temperatures are anticipated before the expiration of the specified curing period. The ambient temperature of the air where concrete is to be placed and the temperature of surfaces to receive concrete shall be not less than 40 degrees F. The temperature of the concrete when placed shall be not less than 50 degrees F nor more than 75 degrees F. Heating of the mixing water or aggregates will be required to regulate the concrete placing temperature. Materials entering the mixer shall be free from ice, snow, or frozen lumps. Salt, chemicals or other materials shall not be incorporated in the concrete to prevent freezing. Upon written approval, an accelerating admixture conforming to ASTM C 494/C 494M, Type C or E may be used, provided it contains no calcium chloride. Calcium chloride shall not be used.

3.5.4 Hot Weather Requirements

When the ambient temperature during concrete placing is expected to exceed 85 degrees F, the concrete shall be placed and finished with procedures previously submitted and as specified herein. The concrete temperature at time of delivery to the forms shall not exceed the temperature shown in the table below when measured in accordance with ASTM C 1064/C 1064M. Cooling of the mixing water or aggregates or placing concrete in the cooler part of the day may be required to obtain an adequate placing temperature. A retarder may be used, as approved, to facilitate placing and finishing. Steel forms and reinforcements shall be cooled as approved prior to concrete placement when steel temperatures are greater than 120 degrees F. Conveying and placing equipment shall be cooled if necessary to maintain proper concrete-placing temperature.

Maximum Allowable Concrete Placing Temperature

Relative Humidity, Percent, During Time of Concrete Placement	Maximum Allowable Concrete Temperature Degrees
Greater than 60	90 F
40-60	85 F
Less than 40	80 F

3.5.5 Prevention of Plastic Shrinkage Cracking

During hot weather with low humidity, and particularly with appreciable wind, as well as interior placements when space heaters produce low humidity, the Contractor shall be alert to the tendency for plastic shrinkage cracks to develop and shall institute measures to prevent this. Particular care shall be taken if plastic shrinkage cracking is potentially imminent and especially if it has developed during a previous placement. Periods of high potential for plastic shrinkage cracking can be anticipated by use of Fig. 2.1.5 of ACI 305R. In addition the concrete placement shall be further protected by erecting shades and windbreaks and by applying fog sprays of water, sprinkling, ponding or wet covering. Plastic shrinkage cracks that occur shall be filled by injection of epoxy resin as directed, after the concrete hardens. Plastic shrinkage cracks shall never be troweled over or filled with slurry.

3.5.6 Placing Concrete in Congested Areas

Special care shall be used to ensure complete filling of the forms, elimination of all voids, and complete consolidation of the concrete when placing concrete in areas congested with reinforcing bars, embedded items, waterstops and other tight spacing. An appropriate concrete mixture shall be used, and the nominal maximum size of aggregate (NMSA) shall meet the specified criteria when evaluated for the congested area. Vibrators with heads of a size appropriate for the clearances available shall be used, and the consolidation operation shall be closely supervised to ensure complete and thorough consolidation at all points. Where necessary, splices of reinforcing bars shall be alternated to reduce congestion. Where two mats of closely spaced reinforcing are required, the bars in each mat shall be placed in matching alignment to reduce congestion. Reinforcing bars may be temporarily crowded to one side during concrete placement provided they are returned to exact required location before concrete placement and consolidation are completed.

3.5.7 Placing Flowable Concrete

If a plasticizing admixture conforming to ASTM C 1017/C 1017M is used or if a Type F or G high range water reducing admixture is permitted to increase the slump, the concrete shall meet all requirements of paragraph GENERAL REQUIREMENTS in PART 1. Extreme care shall be used in conveying and placing the concrete to avoid segregation. Consolidation and finishing shall meet all requirements of paragraphs Placing Concrete, Finishing Formed Surfaces, and Finishing Unformed Surfaces. No relaxation of requirements to accommodate flowable concrete will be permitted.

3.6 JOINTS

Joints shall be located and constructed as indicated or approved. Joints not indicated on the drawings shall be located and constructed to minimize the impact on the strength of the structure. In general, such joints shall be located near the middle of the spans of supported slabs, beams, and girders unless a beam intersects a girder at this point, in which case the joint in the

girder shall be offset a distance equal to twice the width of the beam. Joints in walls and columns shall be at the underside of floors, slabs, beams, or girders and at the tops of footings or floor slabs, unless otherwise approved. Joints shall be perpendicular to the main reinforcement. All reinforcement shall be continued across joints; except that reinforcement or other fixed metal items shall not be continuous through expansion joints, or through construction or contraction joints in slabs on grade. Reinforcement shall be 2 inches clear from each joint. Except where otherwise indicated, construction joints between interior slabs on grade and vertical surfaces shall consist of 30 pound asphalt-saturated felt, extending for the full depth of the slab. The perimeters of the slabs shall be free of fins, rough edges, spalling, or other unsightly appearance. Reservoir for sealant for construction and contraction joints in slabs shall be formed to the dimensions shown on the drawings by removing snap-out joint-forming inserts, by sawing sawable inserts, or by sawing to widen the top portion of sawed joints. Joints to be sealed shall be cleaned and sealed as indicated and in accordance with Section 03150a EXPANSION JOINTS, CONTRACTION JOINTS, AND WATERSTOPS

3.6.1 Construction Joints

For concrete other than slabs on grade, construction joints shall be located so that the unit of operation does not exceed 60 feet. Concrete shall be placed continuously so that each unit is monolithic in construction. Fresh concrete shall not be placed against adjacent hardened concrete until it is at least 24 hours old. Construction joints shall be located as indicated or approved. Where concrete work is interrupted by weather, end of work shift or other similar type of delay, location and type of construction joint shall be subject to approval of the Contracting Officer. Unless otherwise indicated and except for slabs on grade, reinforcing steel shall extend through construction joints. Construction joints in slabs on grade shall be keyed or doweled as shown. Concrete columns, walls, or piers shall be in place at least 2 hours, or until the concrete begins to lose its plasticity, before placing concrete for beams, girders, or slabs thereon. In walls having door or window openings, lifts shall terminate at the top and bottom of the opening. Other lifts shall terminate at such levels as to conform to structural requirements or architectural details. Where horizontal construction joints in walls or columns are required, a strip of 1 inchsquare-edge lumber, bevelled and oiled to facilitate removal, shall be tacked to the inside of the forms at the construction joint. Concrete shall be placed to a point 1 inch above the underside of the strip. The strip shall be removed 1 hour after the concrete has been placed, and any irregularities in the joint line shall be leveled off with a wood float, and all laitance shall be removed. Prior to placing additional concrete, horizontal construction joints shall be prepared as specified in paragraph Previously Placed Concrete.

3.6.2 Contraction Joints in Slabs on Grade

Contraction joints shall be located and detailed as shown on the drawings. Contraction Joints shall be produced by forming a weakened plane in the concrete slab by use of rigid inserts impressed in the concrete during placing operations, use of snap-out plastic joint forming inserts or sawing a continuous slot with a concrete saw. Regardless of method used to produce the weakened plane, it shall be 1/4 the depth of the slab thickness and between 1/8 and 3/16 inch wide unless otherwise indicated on the drawings. For saw-cut joints, cutting shall be timed properly with the set of the concrete. Cutting shall be started as soon as the concrete has hardened sufficiently to prevent ravelling of the edges of the saw cut. Cutting shall be completed before shrinkage stresses become sufficient to produce cracking. Reservoir for joint sealant shall be formed as previously specified.

3.6.3 Expansion Joints

Installation of expansion joints and sealing of these joints shall conform to the requirements of Section 03150a EXPANSION JOINTS, CONTRACTION JOINTS, AND

WATERSTOPS.

3.6.4 Waterstops

Waterstops shall be installed in conformance with the locations and details shown on the drawings using materials and procedures specified in Section 03150a EXPANSION JOINTS, CONTRACTION JOINTS, AND WATERSTOPS.

3.6.5 Dowels

Dowels shall be installed at the locations shown on the drawings and to the details shown, using materials and procedures specified in Section 03200a CONCRETE REINFORCEMENT and herein. Conventional smooth "paving" dowels shall be installed in slabs using approved methods to hold the dowel in place during concreting within a maximum alignment tolerance of 1/8 inch in 12 inches. Care shall be taken during placing adjacent to and around dowels and tie bars to ensure there is no displacement of the dowel or tie bar and that the concrete completely embeds the dowel and is thoroughly consolidated.

3.7 FINISHING FORMED SURFACES

Forms, form materials, and form construction are specified in Section 03100a STRUCTURAL CONCRETE FORMWORK. Finishing of formed surfaces shall be as specified herein. Unless another type of architectural or special finish is specified, surfaces shall be left with the texture imparted by the forms except that defective surfaces shall be repaired. Unless painting of surfaces is required, uniform color of the concrete shall be maintained by use of only one mixture without changes in materials or proportions for any structure or portion of structure that requires a Class B finish. Except for major defects, as defined hereinafter, surface defects shall be repaired as specified herein within 24 hours after forms are removed. Repairs of the so-called "plaster-type" will not be permitted in any location. Tolerances of formed surfaces shall conform to the requirements of ACI 117/117R. These tolerances apply to the finished concrete surface, not to the forms themselves; forms shall be set true to line and grade. Form tie holes requiring repair and other defects whose depth is at least as great as their surface diameter shall be repaired as specified in paragraph Damp-Pack Mortar Repair. Defects whose surface diameter is greater than their depth shall be repaired as specified in paragraph Repair of Major Defects. Repairs shall be finished flush with adjacent surfaces and with the same surface texture. The cement used for all repairs shall be a blend of job cement with white cement proportioned so that the final color after curing and aging will be the same as the adjacent concrete. Concrete with excessive honeycomb, or other defects which affect the strength of the member, will be rejected. Repairs shall be demonstrated to be acceptable and free from cracks or loose or drummy areas at the completion of the contract and, for Class B Finishes, shall be inconspicuous. Repairs not meeting these requirements will be rejected and shall be replaced.

3.7.1 Class B Finish

Class B finish is required in the following areas: exposed concrete surfaces in the pumphouse and filter building, including the the interior of the walls and roof and the concrete pipe supports. Concrete surfaces with membrane waterproofing on the fuel tanks and valve vaults shall recieve a Class B finish or smoother if recommended by the waterproofing manufacturer.. Fins, ravelings, and loose material shall be removed, all surface defects over 1/2 inch in diameter or more than 1/2 inch deep, shall be repaired and, except as otherwise indicated or as specified in Section 03100a STRUCTURAL CONCRETE FORMWORK, holes left by removal of form ties shall be reamed and filled. Defects more than 1/2 inch in diameter shall be cut back to sound concrete, but in all cases at least 1 inch deep. The Contractor shall prepare a sample panel for approval (as specified in PART 1) before commencing repair, showing that the surface texture and color match will be attained. Metal tools shall not be

used to finish repairs in Class A surfaces.

3.7.2 Class C and Class D Finish

Class C finish is required on concealed concrete surfaces permanently that do not require a Class B finish.. Class D finish is required on concrete wall and foundation surfaces below grade agains which backfill will be placed, not designated to recieve membrane waterproofing. Fins, ravelings, and loose material shall be removed, and, except as otherwise indicated or as specified in Section 03100a STRUCTURAL CONCRETE FORMWORK, holes left by removal of form ties shall be reamed and filled. Honeycomb and other defects more than 1/2 inch deep or more than 2 inches in diameter shall be repaired. Defects more than 2 inches in diameter shall be cut back to sound concrete, but in all cases at least 1 inch deep.

3.8 REPAIRS

3.8.1 Damp-Pack Mortar Repair

Form tie holes requiring repair and other defects whose depth is at least as great as their surface diameter but not over 4 inches shall be repaired by the damp-pack mortar method. Form tie holes shall be reamed and other similar defects shall be cut out to sound concrete. The void shall then be thoroughly cleaned, thoroughly wetted, brush-coated with a thin coat of neat cement grout and filled with mortar. Mortar shall be a stiff mix of 1 part portland cement to 2 parts fine aggregate passing the No. 16 mesh sieve, and minimum amount of water. Only sufficient water shall be used to produce a mortar which, when used, will stick together on being molded into a ball by a slight pressure of the hands and will not exude water but will leave the hands damp. Mortar shall be mixed and allowed to stand for 30 to 45 minutes before use with remixing performed immediately prior to use. Mortar shall be thoroughly tamped in place in thin layers using a hammer and hardwood block. Holes passing entirely through walls shall be completely filled from the inside face by forcing mortar through to the outside face. All holes shall be packed full. Damp-pack repairs shall be moist cured for at least 48 hours.

3.8.2 Repair of Major Defects

Major defects will be considered to be those more than 1/2 inch deep or, for Class A and B finishes, more than 1/2 inch in diameter and, for Class C and D finishes, more than 2 inches in diameter. Also included are any defects of any kind whose depth is over 4 inches or whose surface diameter is greater than their depth. Major defects shall be repaired as specified below.

3.8.2.1 Surface Application of Mortar Repair

Defective concrete shall be removed, and removal shall extend into completely sound concrete. Approved equipment and procedures which will not cause cracking or microcracking of the sound concrete shall be used. If reinforcement is encountered, concrete shall be removed so as to expose the reinforcement for at least 2 inches on all sides. All such defective areas greater than 12 square inchesshall be outlined by saw cuts at least 1 inch deep. Defective areas less than 12 square inches shall be outlined by a 1 inch deep cut with a core drill in lieu of sawing. All saw cuts shall be straight lines in a rectangular pattern in line with the formwork panels. After concrete removal, the surface shall be thoroughly cleaned by high pressure washing to remove all loose material. Surfaces shall be kept continually saturated for the first 12 of the 24 hours immediately before placing mortar and shall be damp but not wet at the time of commencing mortar placement. The Contractor, at his option, may use either hand-placed mortar or mortar placed with a mortar gun. If hand-placed mortar is used, the edges of the cut shall be perpendicular to the surface of the concrete. The prepared area shall be brush-coated with a thin coat of neat cement grout. The repair shall then be made using a stiff mortar, preshrunk by

allowing the mixed mortar to stand for 30 to 45 minutes and then remixed, thoroughly tamped into place in thin layers. If hand-placed mortar is used, the Contractor shall test each repair area for drumminess by firm tapping with a hammer and shall inspect for cracks, both in the presence of the Contracting Officer's representative, immediately before completion of the contract, and shall replace any showing drumminess or cracking. If mortar placed with a mortar gun is used, the gun shall be a small compressed air-operated gun to which the mortar is slowly hand fed and which applies the mortar to the surface as a high-pressure stream, as approved. Repairs made using shotcrete equipment will not be accepted. The mortar used shall be the same mortar as specified for damp-pack mortar repair. If gun-placed mortar is used, the edges of the cut shall be beveled toward the center at a slope of 1:1. All surface applied mortar repairs shall be continuously moist cured for at least 7 days. Moist curing shall consist of several layers of saturated burlap applied to the surface immediately after placement is complete and covered with polyethylene sheeting, all held closely in place by a sheet of plywood or similar material rigidly braced against it. Burlap shall be kept continually wet.

3.8.2.2 Repair of Deep and Large Defects

Deep and large defects will be those that are more than 6 inches deep and also have an average diameter at the surface more than 18 inches or that are otherwise so identified by the Project Office. Deep and large defects shall be reported to the Contracting Officer. Such defects shall be repaired as specified herein or directed, except that defects which affect the strength of the structure shall not be repaired and that portion of the structure shall be completely removed and replaced. Deep and large defects shall be repaired by procedures approved in advance including forming and placing special concrete using applied pressure during hardening. Preparation of the repair area shall be as specified for surface application of mortar. In addition, the top edge (surface) of the repair area shall be sloped at approximately 20 degrees from the horizontal, upward toward the side from which concrete will be placed. The special concrete shall be a concrete mixture with low water content and low slump, and shall be allowed to age 30 to 60 minutes before use. Concrete containing a specified expanding admixture may be used in lieu of the above mixture; the paste portion of such concrete mixture shall be designed to have an expansion between 2.0 and 4.0 percent when tested in accordance with ASTM C 940. A full width "chimney" shall be provided at the top of the form on the placing side to ensure filling to the top of the opening. A pressure cap shall be used on the concrete in the chimney with simultaneous tightening and revibrating the form during hardening to ensure a tight fit for the repair. The form shall be removed after 24 hours and immediately the chimney shall be carefully chipped away to avoid breaking concrete out of the repair; the surface of the repair concrete shall be dressed as required.

3.9 FINISHING UNFORMED SURFACES

The finish of all unformed surfaces shall meet the requirements of paragraph Tolerances in PART 1, when tested as specified herein.

3.9.1 General

The ambient temperature of spaces adjacent to unformed surfaces being finished and of the base on which concrete will be placed shall be not less than 50 degrees F. In hot weather all requirements of paragraphs Hot Weather Requirements and Prevention of Plastic Shrinkage Cracking shall be met. Unformed surfaces that are not to be covered by additional concrete or backfill shall have a float finish, with additional finishing as specified below, and shall be true to the elevation shown on the drawings. Surfaces to receive additional concrete or backfill shall be brought to the elevation shown on the drawings, properly consolidated, and left true and regular. Unless otherwise shown on the drawings, exterior surfaces shall be sloped for drainage, as directed. Where drains are provided, interior floors shall be evenly sloped to

the drains. Joints shall be carefully made with a jointing or edging tool. The finished surfaces shall be protected from stains or abrasions. Grate tampers or "jitterbugs" shall not be used for any surfaces. The dusting of surfaces with dry cement or other materials or the addition of any water during finishing shall not be permitted. If bleedwater is present prior to finishing, the excess water shall be carefully dragged off or removed by absorption with porous materials such as burlap. During finishing operations, extreme care shall be taken to prevent over finishing or working water into the surface; this can cause "crazing" (surface shrinkage cracks which appear after hardening) of the surface. Any slabs with surfaces which exhibit significant crazing shall be removed and replaced. During finishing operations, surfaces shall be checked with a 10 foot straightedge, applied in both directions at regular intervals while the concrete is still plastic, to detect high or low areas.

3.9.2 Rough Slab Finish

As a first finishing operation for unformed surfaces and as final finish for slabs to receive mortar setting beds, the surface shall receive a rough slab finish prepared as follows. Slabs to receive ceramic or porcelain tile shall receive only a rough slab finish. The concrete shall be uniformly placed across the slab area, consolidated as previously specified, and then screeded with straightedge strikeoffs immediately after consolidation to bring the surface to the required finish level with no coarse aggregate visible. Side forms and screed rails shall be provided, rigidly supported, and set to exact line and grade. Allowable tolerances for finished surfaces apply only to the hardened concrete, not to forms or screed rails. Forms and screed rails shall be set true to line and grade. "Wet screeds" shall not be used.

3.9.3 Floated Finish

Slabs to receive more than a rough slab finish shall next be given a wood float finish. The screeding shall be followed immediately by darbying or bull floating before bleeding water is present, to bring the surface to a true, even plane. Then, after the concrete has stiffened so that it will withstand a man's weight without imprint of more than 1/4 inch and the water sheen has disappeared, it shall be floated to a true and even plane free of ridges. Floating shall be performed by use of suitable hand floats or power driven equipment. Sufficient pressure shall be used on the floats to bring a film of moisture to the surface. Hand floats shall be made of wood, magnesium, or aluminum. Lightweight concrete or concrete that exhibits stickiness shall be floated with a magnesium float. Care shall be taken to prevent over-finishing or incorporating water into the surface.

3.9.4 Troweled Finish

All interior slabs except and slabs indicated to receive ceramic or porcelain tile shall be given a trowel finish. The slabs for the fuel tank and the 3" grout on top of the tank floor slab shall be given a steel trowel finish. After floating is complete and after the surface moisture has disappeared, unformed surfaces shall be steel-troweled to a smooth, even, dense finish, free from blemishes including trowel marks. In lieu of hand finishing, an approved power finishing machine may be used in accordance with the directions of the machine manufacturer. Additional trowelings shall be performed, either by hand or machine until the surface has been troweled 2 times, with waiting period between each. Care shall be taken to prevent blistering and if such occurs, troweling shall immediately be stopped and operations and surfaces corrected. A final hard steel troweling shall be done by hand, with the trowel tipped, and using hard pressure, when the surface is at a point that the trowel will produce a ringing sound. The finished surface shall be thoroughly consolidated and shall be essentially free of trowel marks and be uniform in texture and appearance. The concrete mixture used for troweled finished areas shall be adjusted, if necessary, in order to provide sufficient fines (cementitious material and fine sand) to finish properly.

3.9.5 Non-Slip Finish

Non-slip floors shall be constructed in accordance with the following subparagraphs.

3.9.5.1 Broomed

Exterior stoops shall be given a broomed finish. After floating, the surface shall be lightly steel troweled, and then carefully scored by pulling a hair or coarse fiber push-type broom across the surface. Brooming shall be transverse to traffic or at right angles to the slope of the slab. After the end of the curing period, the surface shall be vigorously broomed with a coarse fiber broom to remove all loose or semi-detached particles.

3.10 FLOOR HARDENER

The following areas including pumphouse floors, filter room floor, generator floor, and mechanical room floors shall be treated with floor hardener. Floor hardener shall be applied after the concrete has been cured and then air dried for 28 days. Three coats shall be applied, each the day after the preceding coat was applied. For the first application, one pound of the silocofluoride shall be dissolved in one gallon of water. For subsequent applications, the solution shall be two pounds of silicofluoride to each gallon of water. Floor should be mopped with clear water shortly after the preceding application has dried to remove encrusted salts. Proprietary hardeners shall be applied in accordance with the manufacturer's instructions. During application, area should be well ventilated. Precautions shall be taken when applying silicofluorides due to the toxicity of the salts. Any compound that contacts glass or aluminum should be immediately removed with clear water.

3.11 CURING AND PROTECTION

3.11.1 General

Concrete shall be cured by an approved method for the period of time given below:

All concrete	7 days

Immediately after placement, concrete shall be protected from premature drying, extremes in temperatures, rapid temperature change, mechanical injury and damage from rain and flowing water for the duration of the curing period. Air and forms in contact with concrete shall be maintained at a temperature above 50 degrees F for the first 3 days and at a temperature above 32 degrees F for the remainder of the specified curing period. Exhaust fumes from combustion heating units shall be vented to the outside of the enclosure, and heaters and ducts shall be placed and directed so as not to cause areas of overheating and drying of concrete surfaces or to create fire hazards. Materials and equipment needed for adequate curing and protection shall be available and at the site prior to placing concrete. No fire or excessive heat, including welding, shall be permitted near or in direct contact with the concrete at any time. Except as otherwise permitted by paragraph Membrane Forming Curing Compounds, moist curing shall be provided for any areas to receive floor hardener, any paint or other applied coating, or to which other concrete is to be bonded.

3.11.2 Moist Curing

Concrete to be moist-cured shall be maintained continuously wet for the entire curing period, commencing immediately after finishing. If water or curing materials used stain or discolor concrete surfaces which are to be permanently exposed, the concrete surfaces shall be cleaned as approved. When wooden forms are left in place during curing, they shall be kept wet at all times. If steel forms are used in hot weather, nonsupporting vertical forms shall be broken

loose from the concrete soon after the concrete hardens and curing water continually applied in this void. If the forms are removed before the end of the curing period, curing shall be carried out as on unformed surfaces, using suitable materials. Surfaces shall be cured by ponding, by continuous sprinkling, by continuously saturated burlap or cotton mats, or by continuously saturated plastic coated burlap. Burlap and mats shall be clean and free from any contamination and shall be completely saturated before being placed on the concrete. The Contractor shall have an approved work system to ensure that moist curing is continuous 24 hours per day.

3.11.3 Membrane Forming Curing Compounds

Concrete may be cured with a nonpigmented curing compound containing a fugitive dye in lieu of moist curing. Membrane curing shall not be used on surfaces that are to receive any subsequent treatment depending on adhesion or bonding to the concrete, including surfaces to which a smooth finish is to be applied or other concrete to be bonded. However, a styrene acrylate or chlorinated rubber compound meeting ASTM C 309, Class B requirements, may be used for surfaces which are to be painted or are to receive bituminous roofing or waterproofing, or floors that are to receive adhesive applications of resilient flooring. The curing compound selected shall be compatible with any subsequent paint, roofing, waterproofing or flooring specified. Membrane curing compound shall not be used on surfaces that are maintained at curing temperatures with free steam. Curing compound shall be applied to formed surfaces immediately after the forms are removed and prior to any patching or other surface treatment except the cleaning of loose sand, mortar, and debris from the surface. All surfaces shall be thoroughly moistened with water. Curing compound shall be applied to slab surfaces as soon as the bleeding water has disappeared, with the tops of joints being temporarily sealed to prevent entry of the compound and to prevent moisture loss during the curing period. The curing compound shall be applied in a two-coat continuous operation by approved motorized power-spraying equipment operating at a minimum pressure of 75 psi, at a uniform coverage of not more than 400 square feet per gallon for each coat, and the second coat shall be applied perpendicular to the first coat. Concrete surfaces which have been subjected to rainfall within 3 hours after curing compound has been applied shall be resprayed by the method and at the coverage specified. Surfaces on which clear compound is used shall be shaded from direct rays of the sun for the first 3 days. Surfaces coated with curing compound shall be kept free of foot and vehicular traffic, and from other sources of abrasion and contamination during the curing period.

3.11.4 Impervious Sheeting

Except for plastic coated burlap, impervious sheeting alone shall not be used for curing. Impervious-sheet curing shall only be used on horizontal or nearly horizontal surfaces. Surfaces shall be thoroughly wetted and be completely covered with the sheeting. Sheeting shall be at least 18 inches wider than the concrete surface to be covered. Covering shall be laid with light-colored side up. Covering shall be lapped not less than 12 inches and securely weighted down or shall be lapped not less than 4 inches and taped to form a continuous cover with completely closed joints. The sheet shall be weighted to prevent displacement so that it remains in contact with the concrete during the specified length of curing. Coverings shall be folded down over exposed edges of slabs and secured by approved means. Sheets shall be immediately repaired or replaced if tears or holes appear during the curing period.

3.11.5 Ponding or Immersion

Concrete shall be continually immersed throughout the curing period. Water shall not be more than 20 degrees F less than the temperature of the concrete.

3.11.6 Cold Weather Curing and Protection

When the daily ambient low temperature is less than 32 degrees F the temperature of the concrete shall be maintained above 40 degrees F for the first seven days after placing. During the period of protection removal, the air temperature adjacent to the concrete surfaces shall be controlled so that concrete near the surface will not be subjected to a temperature differential of more than 25 degrees F as determined by suitable temperature measuring devices furnished bythe Contractor, as required, and installed adjacent to the concrete surface and 2 inches inside the surface of the concrete. The installation of the thermometers shall be made by the Contractor as directed.

3.12 SETTING BASE PLATES AND BEARING PLATES

After being properly positioned, column base plates, bearing plates for beams and similar structural members, and machinery and equipment base plates shall be set to the proper line and elevation with damp-pack bedding mortar. The thickness of the mortar or grout shall be approximately 1/24 the width of the plate, but not less than 3/4 inch. Concrete and metal surfaces in contact with grout shall be clean and free of oil and grease, and concrete surfaces in contact with grout shall be damp and free of laitance when grout is placed.

3.12.1 Damp-Pack Bedding Mortar

Damp-pack bedding mortar shall consist of 1 part cement and 2-1/2 parts fine aggregate having water content such that a mass of mortar tightly squeezed in the hand will retain its shape but will crumble when disturbed. The space between the top of the concrete and bottom of the bearing plate or base shall be packed with the bedding mortar by tamping or ramming with a bar or rod until it is completely filled.

3.12.2 Nonshrink Grout

Nonshrink grout shall be a ready-mixed material requiring only the addition of water. Water content shall be the minimum that will provide a flowable mixture and completely fill the space to be grouted without segregation, bleeding, or reduction of strength.

3.12.2.1 Mixing and Placing of Nonshrink Grout

Mixing and placing shall be in conformance with the material manufacturer's instructions and as specified therein. Ingredients shall be thoroughly dry-mixed before adding water. After adding water, the batch shall be mixed for 3 minutes. Batches shall be of size to allow continuous placement of freshly mixed grout. Grout not used within 30 minutes after mixing shall be discarded. The space between the top of the concrete or machinery-bearing surface and the plate shall be filled solid with the grout. Forms shall be of wood or other equally suitable material for completely retaining the grout on all sides and on top and shall be removed after the grout has set. The placed grout shall be carefully worked by rodding or other means to eliminate voids; however, overworking and breakdown of the initial set shall be avoided. Grout shall not be retempered or subjected to vibration from any source. Where clearances are unusually small, placement shall be under pressure with a grout pump. Temperature of the grout, and of surfaces receiving the grout, shall be maintained at 65 to 85 degrees F until after setting.

3.12.2.2 Treatment of Exposed Surfaces

For metal-oxidizing nonshrink grout, exposed surfaces shall be cut back 1 inch and immediately covered with a parge coat of mortar consisting of 1 part portland cement and 2-1/2 parts fine aggregate by weight, with sufficient water to make a plastic mixture. The parge coat shall have a smooth finish. For other mortars or grouts, exposed surfaces shall have a smooth-dense finish and be left untreated. Curing shall comply with paragraph CURING AND PROTECTION.

3.13 TESTING AND INSPECTION FOR CONTRACTOR QUALITY CONTROL

The Contractor shall perform the inspection and tests described below and, based upon the results of these inspections and tests, shall take the action required and shall submit specified reports. When, in the opinion of the Contracting Officer, the concreting operation is out of control, concrete placement shall cease and the operation shall be corrected. The laboratory performing the tests shall be onsite and shall conform with ASTM C 1077. Materials may be subjected to check testing by the Government from samples obtained at the manufacturer, at transfer points, or at the project site.

3.13.1 Concrete Mixture

a. Air Content Testing. Air content tests shall be made when test specimens are fabricated. In addition, at least two tests for air content shall be made on randomly selected batches of each separate concrete mixture produced during each 8-hour period of concrete production. Additional tests shall be made when excessive variation in workability is reported by the placing foreman or Government inspector. Tests shall be made in accordance with ASTM C 231 for normal weight concrete. Test results shall be plotted on control charts which shall at all times be readily available to the Government and shall be submitted weekly. Copies of the current control charts shall be kept in the field by testing crews and results plotted as tests are made. When a single test result reaches either the upper or lower action limit, a second test shall immediately be made. The results of the two tests shall be averaged and this average used as the air content of the batch to plot on both the air content and the control chart for range, and for determining need for any remedial action. The result of each test, or average as noted in the previous sentence, shall be plotted on a separate control chart for each mixture on which an "average line" is set at the midpoint of the specified air content range from paragraph Air Entrainment. An upper warning limit and a lower warning limit line shall be set 1.0 percentage point above and below the average line, respectively. An upper action limit and a lower action limit line shall be set 1.5 percentage points above and below the average line, respectively. The range between each two consecutive tests shall be plotted on a secondary control chart for range where an upper warning limit is set at 2.0 percentage points and an upper action limit is set at 3.0 percentage points. Samples for air content may be taken at the mixer, however, the Contractor is responsible for delivering the concrete to the placement site at the stipulated air content. If the Contractor's materials or transportation methods cause air content loss between the mixer and the placement, correlation samples shall be taken at the placement site as required by the Contracting Officer, and the air content at the mixer controlled as directed.

b. Air Content Corrective Action. Whenever points on the control chart for percent air reach either warning limit, an adjustment shall immediately be made in the amount of air-entraining admixture batched. As soon as practical after each adjustment, another test shall be made to verify the result of the adjustment. Whenever a point on the secondary control chart for range reaches the warning limit, the admixture dispenser shall be recalibrated to ensure that it is operating accurately and with good reproducibility. Whenever a point on either control chart reaches an action limit line, the air content shall be considered out of control and the concreting operation shall immediately be halted until the air content is under control. Additional air content tests shall be made when concreting is restarted.

c. Slump Testing. In addition to slump tests which shall be made when test specimens are fabricated, at least four slump tests shall be made on randomly selected batches in accordance with ASTM C 143/C 143M for each

separate concrete mixture produced during each 8-hour or less period of concrete production each day. Also, additional tests shall be made when excessive variation in workability is reported by the placing foreman or Government inspector. Test results shall be plotted on control charts which shall at all times be readily available to the Government and shall be submitted weekly. Copies of the current control charts shall be kept in the field by testing crews and results plotted as tests are made. When a single slump test reaches or goes beyond either the upper or lower action limit, a second test shall immediately be made. The results of the two tests shall be averaged and this average used as the slump of the batch to plot on both the control charts for slump and the chart for range, and for determining need for any remedial action. Limits shall be set on separate control charts for slump for each type of mixture. The upper warning limit shall be set at 1/2 inch below the maximum allowable slump specified in paragraph Slump in PART 1 for each type of concrete and an upper action limit line and lower action limit line shall be set at the maximum and minimum allowable slumps, respectively, as specified in the same paragraph. The range between each consecutive slump test for each type of mixture shall be plotted on a single control chart for range on which an upper action limit is set at 2 inches. Samples for slump shall be taken at the mixer. However, the Contractor is responsible for delivering the concrete to the placement site at the stipulated slump. If the Contractor's materials or transportation methods cause slump loss between the mixer and the placement, correlation samples shall be taken at the placement site as required by the Contracting Officer, and the slump at the mixer controlled as directed.

d. Slump Corrective Action. Whenever points on the control charts for slump reach the upper warning limit, an adjustment shall immediately be made in the batch weights of water and fine aggregate. The adjustments are to be made so that the total water content does not exceed that amount allowed by the maximum w/c ratio specified, based on aggregates which are in a saturated surface dry condition. When a single slump reaches the upper or lower action limit, no further concrete shall be delivered to the placing site until proper adjustments have been made. Immediately after each adjustment, another test shall be made to verify the correctness of the adjustment. Whenever two consecutive individual slump tests, made during a period when there was no adjustment of batch weights, produce a point on the control chart for range at or above the upper action limit, the concreting operation shall immediately be halted, and the Contractor shall take appropriate steps to bring the slump under control. Additional slump tests shall be made as directed.

e. Temperature. The temperature of the concrete shall be measured when compressive strength specimens are fabricated. Measurement shall be in accordance with ASTM C 1064/C 1064M. The temperature shall be reported along with the compressive strength data.

f. Strength Specimens. At least one set of test specimens shall be made, for compressive strength, on each different concrete mixture placed during the day for each 500 cubic yards or portion thereof of that concrete mixture placed each day. Additional sets of test specimens shall be made, as directed by the Contracting Officer, when the mixture proportions are changed or when low strengths have been detected. A truly random (not haphazard) sampling plan shall be developed by the Contractor and approved by the Contracting Officer prior to the start of construction. The plan shall assure that sampling is done in a completely random and unbiased manner. A set of test specimens for concrete with a 28-day specified strength per paragraph Strength Requirements in PART 1 shall consist of four specimens, two to be tested at 7 days and two at 28 days. Test specimens shall be molded and cured in accordance with ASTM C 31/C 31M and tested in accordance with

ASTM C 39/C 39M for test cylinders. Results of all strength tests shall be reported immediately to the Contracting Officer. Quality control charts shall be kept for individual strength "tests", ("test" as defined in paragraph Strength Requirements in PART 1) moving average of last 3 "tests" for strength, and moving average for range for the last 3 "tests" for each mixture. The charts shall be similar to those found in ACI 214.3R.

3.13.2 Inspection Before Placing

Foundations, construction joints, forms, and embedded items shall be inspected by the Contractor in sufficient time prior to each concrete placement in order to certify to the Contracting Officer that they are ready to receive concrete. The results of each inspection shall be reported in writing.

3.13.3 Placing

The placing foreman shall supervise placing operations, shall determine that the correct quality of concrete or grout is placed in each location as specified and as directed by the Contracting Officer, and shall be responsible for measuring and recording concrete temperatures and ambient temperature hourly during placing operations, weather conditions, time of placement, volume placed, and method of placement. The placing foreman shall not permit batching and placing to begin until it has been verified that an adequate number of vibrators in working order and with competent operators are available. Placing shall not be continued if any pile of concrete is inadequately consolidated. If any batch of concrete fails to meet the temperature requirements, immediate steps shall be taken to improve temperature controls.

3.13.4 Vibrators

The frequency and amplitude of each vibrator shall be determined in accordance with COE CRD-C 521 prior to initial use and at least once a month when concrete is being placed. Additional tests shall be made as directed when a vibrator does not appear to be adequately consolidating the concrete. The frequency shall be determined while the vibrator is operating in concrete with the tachometer being held against the upper end of the vibrator head while almost submerged and just before the vibrator is withdrawn from the concrete. The amplitude shall be determined with the head vibrating in air. Two measurements shall be taken, one near the tip and another near the upper end of the vibrator head, and these results averaged. The make, model, type, and size of the vibrator and frequency and amplitude results shall be reported in writing. Any vibrator not meeting the requirements of paragraph Consolidation, shall be immediately removed from service and repaired or replaced.

3.13.5 Curing Inspection

a. Moist Curing Inspections. At least once each shift, and not less than twice per day on both work and non-work days, an inspection shall be made of all areas subject to moist curing. The surface moisture condition shall be noted and recorded.

b. Moist Curing Corrective Action. When a daily inspection report lists an area of inadequate curing, immediate corrective action shall be taken, and the required curing period for those areas shall be extended by 1 day.

c. Membrane Curing Inspection. No curing compound shall be applied until the Contractor has verified that the compound is properly mixed and ready for spraying. At the end of each operation, the Contractor shall estimate the quantity of compound used by measurement of the container and the area of concrete surface covered, shall compute the rate of coverage in square feet per gallon, and shall note whether or not

coverage is uniform.

d. Membrane Curing Corrective Action. When the coverage rate of the curing compound is less than that specified or when the coverage is not uniform, the entire surface shall be sprayed again.

e. Sheet Curing Inspection. At least once each shift and once per day on non-work days, an inspection shall be made of all areas being cured using impervious sheets. The condition of the covering and the tightness of the laps and tapes shall be noted and recorded.

f. Sheet Curing Corrective Action. When a daily inspection report lists any tears, holes, or laps or joints that are not completely closed, the tears and holes shall promptly be repaired or the sheets replaced, the joints closed, and the required curing period for those areas shall be extended by 1 day.

3.13.6 Cold-Weather Protection

At least once each shift and once per day on non-work days, an inspection shall be made of all areas subject to cold-weather protection. Any deficiencies shall be noted, corrected, and reported.

3.13.7 Reports

All results of tests or inspections conducted shall be reported informally as they are completed and in writing daily. A weekly report shall be prepared for the updating of control charts covering the entire period from the start of the construction season through the current week. During periods of cold-weather protection, reports of pertinent temperatures shall be made daily. These requirements do not relieve the Contractor of the obligation to report certain failures immediately as required in preceding paragraphs. Such reports of failures and the action taken shall be confirmed in writing in the routine reports. The Contracting Officer has the right to examine all contractor quality control records.

-- End of Section --

SECTION TABLE OF CONTENTS

DIVISION 04 - MASONRY

SECTION 04200A

MASONRY

10/01

PART 1 GENERAL

1.1 REFERENCES
1.2 SUBMITTALS
1.3 SAMPLE MASONRY PANELS
1.3.1 Configuration
1.3.2 Composition
1.3.3 Construction Method
1.3.4 Usage
1.4 DELIVERY, HANDLING, AND STORAGE
1.4.1 Masonry Units
1.4.2 Reinforcement, Anchors, and Ties
1.4.3 Cementitious Materials, Sand and Aggregates

PART 2 PRODUCTS

2.1 GENERAL REQUIREMENTS
2.2 CONCRETE MASONRY UNITS (CMU)
2.2.1 Aggregates
2.2.2 Kinds and Shapes
2.2.2.1 Architectural Units
2.2.3 Fire-Rated CMU
2.3 PRECAST CONCRETE ITEMS
2.3.1 Splash Blocks
2.4 MORTAR
2.4.1 Admixtures
2.4.2 Coloring
2.5 GROUT
2.5.1 Admixtures
2.5.2 Grout Barriers
2.6 ANCHORS, TIES, AND BAR POSITIONERS
2.6.1 Wall Ties
2.6.2 Dovetail Anchors
2.6.3 Bar Positioners
2.7 JOINT REINFORCEMENT
2.8 REINFORCING STEEL BARS AND RODS
2.9 EXPANSION-JOINT MATERIALS
2.10 INSULATION
2.10.1 Rigid Board-Type Insulation
2.10.1.1 Insulation Thickness and Air Space
2.10.1.2 Aged R-Value
2.10.1.3 Recovered Material
2.10.2 Insulation Adhesive
2.11 FLASHING

PART 3 EXECUTION

3.1 ENVIRONMENTAL REQUIREMENTS
3.1.1 Hot Weather Installation
3.1.2 Cold Weather Installation

3.1.2.1 Preparation
3.1.2.2 Completed Masonry and Masonry Not Being Worked On
3.2 LAYING MASONRY UNITS
3.2.1 Surface Preparation
3.2.2 Forms and Shores
3.2.3 Concrete Masonry Units
3.2.4 Tolerances
3.2.5 Cutting and Fitting
3.2.6 Jointing
3.2.6.1 Flush Joints
3.2.6.2 Tooled Joints
3.2.6.3 Door and Window Frame Joints
3.2.7 Joint Widths
3.2.7.1 Concrete Masonry Units
3.2.8 Embedded Items
3.2.9 Unfinished Work
3.2.10 Masonry Wall Intersections
3.2.11 Partitions
3.3 ANCHORED VENEER CONSTRUCTION
3.4 WEEP HOLES
3.5 MORTAR
3.6 REINFORCING STEEL
3.6.1 Positioning Bars
3.6.2 Splices
3.7 JOINT REINFORCEMENT
3.8 PLACING GROUT
3.8.1 Vertical Grout Barriers for Fully Grouted Walls
3.8.2 Horizontal Grout Barriers
3.8.3 Cleanouts
3.8.3.1 Cleanouts for Hollow Unit Masonry Construction
3.8.4 Grouting Equipment
3.8.4.1 Grout Pumps
3.8.4.2 Vibrators
3.8.5 Grout Placement
3.8.5.1 Low-Lift Method
3.8.5.2 High-Lift Method
3.9 BOND BEAMS
3.10 CONTROL JOINTS
3.11 CONCRETE MASONRY VENEER JOINTS
3.12 SHELF ANGLES
3.13 LINTELS
3.13.1 Masonry Lintels
3.14 ANCHORAGE TO CONCRETE
3.14.1 Anchorage to Concrete
3.15 INSULATION
3.16 SPLASH BLOCKS
3.17 POINTING AND CLEANING
3.17.1 Concrete Masonry Unit and
3.18 BEARING PLATES
3.19 PROTECTION
3.20 TEST REPORTS
3.20.1 Field Testing of Mortar
3.20.2 Field Testing of Grout

-- End of Section Table of Contents --

SECTION 04200A

MASONRY
10/01

PART 1 GENERAL

1.1 REFERENCES

The publications listed below form a part of this specification to the extent referenced. The publications are referred to in the text by basic designation only.

ACI INTERNATIONAL (ACI)

ACI SP-66	(1994) ACI Detailing Manual

AMERICAN SOCIETY FOR TESTING AND MATERIALS (ASTM)

ASTM A 82	(1997a) Steel Wire, Plain, for Concrete Reinforcement
ASTM A 153/A 153M	(2000) Zinc Coating (Hot-Dip) on Iron and Steel Hardware
ASTM A 615/A 615M	(2000) Deformed and Plain Billet-Steel Bars for Concrete Reinforcement
ASTM C 90	(2000) Loadbearing Concrete Masonry Units
ASTM C 91	(1999) Masonry Cement
ASTM C 140	(1999b) Sampling and Testing Concrete Masonry Units
ASTM C 270	(2000) Mortar for Unit Masonry
ASTM C 476	(1999) Grout for Masonry
ASTM C 494/C 494M	(1999ae1) Chemical Admixtures for Concrete
ASTM C 578	(1995) Rigid, Cellular Polystyrene Thermal Insulation
ASTM C 641	(1982; R 1998el) Staining Materials in Lightweight Concrete Aggregates
ASTM C 780	(2000) Preconstruction and Construction Evaluation of Mortars for Plain and Reinforced Unit Masonry
ASTM C 1019	(2000) Sampling and Testing Grout
ASTM C 1072	(2000) Measurement of Masonry Flexural Bond Strength
ASTM C 1289	(1998) Faced Rigid Cellular Polyisocyanurate Thermal Insulation Board

1.2 SUBMITTALS

Government approval is required for submittals with a "G" designation; submittals not having a "G" designation are for information only. When used, a designation following the "G" designation identifies the office that will review the submittal for the Government. The following shall be submitted in accordance with Section 01330 SUBMITTAL PROCEDURES:

SD-02 Shop Drawings

Masonry Work; G-AE

Drawings including plans, elevations, and details of wall reinforcement; details of reinforcing bars at corners and wall intersections; offsets; tops, bottoms, and ends of walls; control and expansion joints; and wall openings. Bar splice locations shall be shown. Bent bars shall be identified on a bending diagram and shall be referenced and located on the drawings. Wall dimensions, bar clearances, and wall openings greater than one masonry unit in area shall be shown. No approval will be given to the shop drawings until the Contractor certifies that all openings, including those for mechanical and electrical service, are shown. If, during construction, additional masonry openings are required, the approved shop drawings shall be resubmitted with the additional openings shown along with the proposed changes. Location of these additional openings shall be clearly highlighted. The minimum scale for wall elevations shall be 1/4 inch per foot. Reinforcement bending details shall conform to the requirements of ACI SP-66.

SD-03 Product Data

Insulation;

Manufacturer's descriptive data.

Cold Weather Installation;

Cold weather construction procedures.

SD-04 Samples

Concrete Masonry Units (CMU)

Color samples of three stretcher units and one unit for each type of special shape. Units shall show the full range of color and texture.

Anchors, Ties, and Bar Positioners

Two of each type used.

Expansion-Joint Material;

One piece of each type used.

Joint Reinforcement;

One piece of each type used, including corner and wall intersection pieces, showing at least two cross wires.

Insulation;

One piece of board type insulation, not less than 16 by 24 inches in size, containing the label indicating the rated permeance and R-values.

SD-06 Test Reports

Field Testing of Mortar;
Field Testing of Grout;
Masonry Cement;
Fire-rated CMU;

Test reports from an approved independent laboratory. Test reports on a previously tested material shall be certified as the same as that proposed for use in this project.

SD-07 Certificates

Concrete Masonry Units (CMU);
Anchors, Ties, and Bar Positioners
Expansion-Joint Materials
Joint Reinforcement
Reinforcing Steel Bars and Rods
Masonry Cement;
Mortar Coloring;
Insulation;
Precast Concrete Items
Mortar Admixtures;
Grout Admixtures;

Certificates of compliance stating that the materials meet the specified requirements.

Insulation;

Certificate attesting that the polyurethane or polyisocyanurate insulation furnished for the project contains recovered material, and showing an estimated percent of such recovered material.

1.3 SAMPLE MASONRY PANELS

After material samples are approved and prior to starting masonry work, sample masonry panels shall be constructed for each type and color of masonry required. At least 48 hours prior to constructing the sample panel or panels, the Contractor shall submit written notification to the Contracting Officer's Representative. Sample panels shall not be built in, or as part of the structure, but shall be located where directed.

1.3.1 Configuration

Panels shall be L-shaped or otherwise configured to represent all of the wall elements. Panels shall be of the size necessary to demonstrate the acceptable level of workmanship for each type of masonry represented on the project. The minimum size of a straight panel or a leg of an L-shaped panel shall be 8 feet long by 4 feet high.

1.3.2 Composition

Panels shall show full color range, texture, and bond pattern of the masonry work. The Contractor's method for mortar joint tooling; grouting of reinforced vertical cores, bond beams, and lintels; positioning, securing, and lapping of reinforcing steel; positioning and lapping of joint reinforcement (including prefabricated corners); and cleaning of masonry work shall be demonstrated during the construction of the panels. Installation or application procedures

for anchors, wall ties, CMU control joints, insulation, flashing, shall be shown in the sample panels. The panels shall contain a masonry bonded corner that includes a bond beam corner. Panels that represent reinforced masonry shall contain a 2 by 2 foot opening placed at least 2 feet above the panel base and 2 feet away from all free edges, corners, and control joints. Required reinforcing shall be provided around this opening as well as at wall corners and control joints.

1.3.3 Construction Method

Where anchored veneer walls are required, the Contractor shall demonstrate and receive approval for the method of construction; i.e., either bring up the two wythes together or separately, with the insulation and appropriate ties placed within the specified tolerances across the cavity. Temporary provisions shall be demonstrated to preclude mortar or grout droppings in the cavity and to provide a clear open air space of the dimensions shown on the drawings. Where masonry is to be grouted, the Contractor shall demonstrate and receive approval on the method that will be used to bring up the masonry wythes; support the reinforcing bars; and grout cells, bond beams, and lintels using the requirements specified herein. If sealer is specified to be applied to the masonry units, sealer shall be applied to the sample panels. Panels shall be built on a properly designed concrete foundation.

1.3.4 Usage

The completed panels shall be used as the standard of workmanship for the type of masonry represented. Masonry work shall not commence until the sample panel for that type of masonry construction has been completed and approved. Panels shall be protected from the weather and construction operations until the masonry work has been completed and approved. After completion of the work, the sample panels, including all foundation concrete, shall become the property of the Contractor and shall be removed from the construction site.

1.4 DELIVERY, HANDLING, AND STORAGE

Materials shall be delivered, handled, stored, and protected to avoid chipping, breakage, and contact with soil or contaminating material.

1.4.1 Masonry Units

Concrete masonry units shall be covered or protected from inclement weather.

1.4.2 Reinforcement, Anchors, and Ties

Steel reinforcing bars, coated anchors, ties, and joint reinforcement shall be stored above the ground. Steel reinforcing bars and uncoated ties shall be free of loose mill scale and rust.

1.4.3 Cementitious Materials, Sand and Aggregates

Cementitious and other packaged materials shall be delivered in unopened containers, plainly marked and labeled with manufacturers' names and brands. Cementitious material shall be stored in dry, weathertight enclosures or be completely covered. Cement shall be handled in a manner that will prevent the inclusion of foreign materials and damage by water or dampness. Sand and aggregates shall be stored in a manner to prevent contamination or segregation.

PART 2 PRODUCTS

2.1 GENERAL REQUIREMENTS

The source of materials which will affect the appearance of the finished work shall not be changed after the work has started except with Contracting

Officer's approval.

2.2 CONCRETE MASONRY UNITS (CMU)

Hollow and solid concrete masonry units shall conform to ASTM C 90. Cement shall have a low alkali content and be of one brand.

2.2.1 Aggregates

Lightweight aggregates and blends of lightweight and heavier aggregates in proportions used in producing the units, shall comply with the following requirements when tested for stain-producing iron compounds in accordance with ASTM C 641: by visual classification method, the iron stain deposited on the filter paper shall not exceed the "light stain" classification.

2.2.2 Kinds and Shapes

Units shall be modular in size and shall include closer, jamb, header, lintel, and bond beam units and special shapes and sizes to complete the work as indicated. Units used in exposed masonry surfaces in any one building shall have a uniform fine to medium texture and a uniform color.

2.2.2.1 Architectural Units

Units shall have patterned face shell. Face shell pattern shall be Spiit faced and Burnished double half units. Units shall be integrally colored during manufacture. Patterned face shell shall be properly aligned in the completed wall.

2.2.3 Fire-Rated CMU

Concrete masonry units used in fire-rated construction shown on the drawings shall be of minimum equivalent thickness for the fire rating indicated and the corresponding type of aggregates indicated in TABLE I. Units containing more than one of the aggregates listed in TABLE I will be rated on the aggregate requiring the greater minimum equivalent thickness to produce the required fire rating.

TABLE I

FIRE-RATED CONCRETE MASONRY UNITS

See note (a) below

Aggregate Type	Minimum equivalent thickness inches for fire rating of: 4 hours	3 hours	2 hours
Pumice	4.7	4.0	3.0
Expanded slag	5.0	4.2	3.3
Expanded clay, shale, or slate	5.7	4.8	3.7
Limestone, scoria, cinders or unexpanded slag	5.9	5.0	4.0
Calcareous gravel	6.2	5.3	4.2

TABLE I

FIRE-RATED CONCRETE MASONRY UNITS

	See note (a) below		
Siliceous gravel	6.7	5.7	4.5

(a) Minimum equivalent thickness shall equal net volume as determined in conformance with ASTM C 140 divided by the product of the actual length and height of the face shell of the unit in inches. Where walls are to receive plaster or be faced with brick, or otherwise form an assembly; the thickness of plaster or brick or other material in the assembly will be included in determining the equivalent thickness.

2.3 PRECAST CONCRETE ITEMS

Splashblocks shall be factory-made units from a plant regularly engaged in producing precast concrete units. Unless otherwise indicated, concrete shall be 4,000 psi minimum conforming to Section 03300 CAST-IN-PLACE STRUCTURAL CONCRETE using 1/2 inch to No. 4 nominal-size coarse aggregate, and minimum reinforcement shall be the reinforcement required for handling of the units. Clearance of 3/4 inch shall be maintained between reinforcement and faces of units. Unless precast-concrete items have been subjected during manufacture to saturated-steam pressure of at least 120 psi for at least 5 hours, the items, after casting, shall be either damp-cured for 24 hours or steam-cured and shall then be aged under cover for 28 days or longer. Cast-concrete members weighing over 80 pounds shall have built-in loops of galvanized wire or other approved provisions for lifting and anchoring. Units shall have beds and joints at right angles to the face, with sharp true arises. Exposed-to-view surfaces shall be free of surface voids, spalls, cracks, and chipped or broken edges. Precast units exposed-to-view shall be of uniform appearance and color. Unless otherwise specified, units shall have a smooth dense finish. Prior to use, each item shall be wetted and inspected for crazing. Items showing evidence of dusting, spalling, crazing, or having surfaces treated with a protective coating will be rejected.

2.3.1 Splash Blocks

Splash blocks shall be as detailed. Reinforcement shall be the manufacturer's standard.

2.4 MORTAR

Mortar shall be Type S in accordance with the proportion specification of ASTM C 270 except Type S cement-lime mortar proportions shall be 1 part cement, 1/2 part lime and 4-1/2 parts aggregate; when masonry cement ASTM C 91 is used the maximum air content shall be limited to 12 percent and performance equal to cement-lime mortar shall be verified. Verification of masonry cement performance shall be based on ASTM C 780 and ASTM C 1072. Cement shall have a low alkali content and be of one brand. Aggregates shall be from one source.

2.4.1 Admixtures

In cold weather, a non-chloride based accelerating admixture may be used subject to approval. Accelerating admixture shall be non-corrosive, shall contain less than 0.2 percent chlorides, and shall conform to ASTM C 494/C 494M, Type C.

2.4.2 Coloring

Mortar coloring shall be added to the mortar used for exposed masonry surfaces to produce a uniform color. Mortar coloring shall not exceed 3 percent of the

weight of cement for carbon black and ten percent of the weight of cement for all other pigments. Mortar coloring shall be chemically inert, of finely ground limeproof pigment, and furnished in accurately pre-measured and packaged units that can be added to a measured amount of cement.

2.5 GROUT

Grout shall conform to ASTM C 476. Cement used in grout shall have a low alkali content. Grout slump shall be between 8 and 10 inches. Grout shall be used subject to the limitations of Table III. Proportions shall not be changed and materials with different physical or chemical characteristics shall not be used in grout for the work unless additional evidence is furnished that the grout meets the specified requirements.

2.5.1 Admixtures

In cold weather, a non-chloride based accelerating admixture may be used subject to approval. Accelerating admixture shall be non-corrosive, shall contain less than 0.2 percent chlorides, and shall conform to ASTM C 494/C 494M, Type C.

2.5.2 Grout Barriers

Grout barriers for vertical cores shall consist of fine mesh wire, fiberglass, or expanded metal.

2.6 ANCHORS, TIES, AND BAR POSITIONERS

Anchors and ties shall be fabricated without drips or crimps and shall be zinc-coated in accordance with ASTM A 153/A 153M, Class B-2. Steel wire used for anchors and ties shall be fabricated from steel wire conforming to ASTM A 82. Anchors and ties shall be sized to provide a minimum of 5/8 inch mortar cover from either face.

2.6.1 Wall Ties

Wall ties shall be rectangular-shaped or Z-shaped fabricated of 3/16 inch diameter zinc-coated steel wire. Rectangular wall ties shall be no less than 4 inches wide. Wall ties may also be of a continuous type conforming to paragraph JOINT REINFORCEMENT. Adjustable type wall ties, if approved for use, shall consist of two essentially U-shaped elements fabricated of 3/16 inch diameter zinc-coated steel wire. Adjustable ties shall be of the double pintle to eye type and shall allow a maximum of 1/2 inch eccentricity between each element of the tie. Play between pintle and eye opening shall be not more than 1/16 inch. The pintle and eye elements shall be formed so that both can be in the same plane.

2.6.2 Dovetail Anchors

Dovetail anchors shall be of the flexible wire type, 3/16 inch diameter zinc-coated steel wire, triangular shaped, and attached to a 12 gauge or heavier steel dovetail section. These anchors shall be used for anchorage of veneer wythes extending over the face of concrete walls. Cells within vertical planes of these anchors shall be filled solid with grout for full height of walls or partitions, or solid units may be used. Dovetail slots are specified in Section 03300 CAST-IN-PLACE STRUCTURAL CONCRETE.

2.6.3 Bar Positioners

Bar positioners, used to prevent displacement of reinforcing bars during the course of construction, shall be factory fabricated from 9 gauge steel wire or equivalent, and coated with a hot-dip galvanized finish. Not more than one wire shall cross the cell.

2.7 JOINT REINFORCEMENT

Joint reinforcement shall be factory fabricated from steel wire conforming to ASTM A 82, welded construction. Tack welding will not be acceptable in reinforcement used for wall ties. Wire shall have zinc coating conforming to ASTM A 153/A 153M, Class B-2. All wires shall be a minimum of 9 gauge. Reinforcement shall be ladder type design, having one longitudinal wire in the mortar bed of each face shell for hollow units and one wire for solid units. Joint reinforcement shall be placed a minimum of 5/8 inch cover from either face. The distance between crosswires shall not exceed 16 inches. Joint reinforcement for straight runs shall be furnished in flat sections not less than 10 feet long. Joint reinforcement shall be provided with factory formed corners and intersections. If approved for use, joint reinforcement may be furnished with adjustable wall tie features.

2.8 REINFORCING STEEL BARS AND RODS

Reinforcing steel bars and rods shall conform to ASTM A 615/A 615M, Grade 60.

2.9 EXPANSION-JOINT MATERIALS

Backer rod and sealant shall be adequate to accommodate joint compression equal to 50 percent of the width of the joint. The backer rod shall be compressible rod stock of polyethylene foam, polyurethane foam, butyl rubber foam, or other flexible, nonabsorptive material as recommended by the sealant manufacturer. Sealant shall conform to Section 07900a JOINT SEALING.

2.10 INSULATION

2.10.1 Rigid Board-Type Insulation

Rigid board-type insulation shall be extruded polystyrene, polyurethane, or polyisocyanurate. Polystyrene shall conform to ASTM C 578. Polyisocyanurate shall conform to ASTM C 1289, Type I, Class 1 or 2, faced with aluminum foil on both sides of the foam. The insulation shall be a standard product and shall be marked with not less than the manufacturer's trademark or name, the specification number, the permeance and R-values.

2.10.1.1 Insulation Thickness and Air Space

The cavity space shall allow for a maximum insulation thickness of 2 inches, and a minimum air space of 3/4 inch.

2.10.1.2 Aged R-Value

The insulation shall provide a minimum aged R-value of 11 for the overall thickness. The aged R-value shall be determined at 75 degrees F in accordance with the appropriate referenced specification. The stated R-value of the insulation shall be certified by an independent testing laboratory or certified by an independent Registered Professional Engineer if tests are conducted in the manufacturer's laboratory.

2.10.1.3 Recovered Material

Contractor shall comply with EPA requirements in accordance with Section 01670 RECYCLED / RECOVERD MATERIALS. The polyurethane or polyisocyanurate foam shall have a minimum recovered material content of 9percent by weight of the core material.

2.10.2 Insulation Adhesive

Insulation adhesive shall be specifically prepared to adhere the insulation to

the masonry and, where applicable, to the thru-wall flashing. The adhesive shall not deleteriously affect the insulation, and shall have a record of satisfactory and proven performance for the conditions under which to be used.

2.11 FLASHING

Flashing shall be as specified in Section 07600a SHEET METALWORK, GENERAL.

PART 3 EXECUTION

3.1 ENVIRONMENTAL REQUIREMENTS

3.1.1 Hot Weather Installation

The following precautions shall be taken if masonry is erected when the ambient air temperature is more than 99 degrees F in the shade and the relative humidity is less than 50 percent. All masonry materials shall be shaded from direct sunlight; mortar beds shall be spread no more than 4 feet ahead of masonry; masonry units shall be set within one minute of spreading mortar; and after erection, masonry shall be protected from direct exposure to wind and sun for 48 hours.

3.1.2 Cold Weather Installation

Before erecting masonry when ambient temperature or mean daily air temperature falls below 40 degrees F, a written statement of proposed cold weather construction procedures shall be submitted for approval. The following precautions shall be taken during all cold weather erection.

3.1.2.1 Preparation

Ice or snow formed on the masonry bed shall be thawed by the application of heat. Heat shall be applied carefully until the top surface of the masonry is dry to the touch. Sections of masonry deemed frozen and damaged shall be removed before continuing construction of those sections.

a. Air Temperature 40 to 32 Degrees F. Sand or mixing water shall be heated to produce mortar temperatures between 40 and 120 degrees F.

b. Air Temperature 32 to 25 Degrees F. Sand and mixing water shall be heated to produce mortar temperatures between 40 and 120 degrees F. Temperature of mortar on boards shall be maintained above freezing.

c. Air Temperature 25 to 20 Degrees F. Sand and mixing water shall be heated to provide mortar temperatures between 40 and 120 degrees F. Temperature of mortar on boards shall be maintained above freezing. Sources of heat shall be used on both sides of walls under construction. Windbreaks shall be employed when wind is in excess of 15 mph.

d. Air Temperature 20 Degrees F and below. Sand and mixing water shall be heated to provide mortar temperatures between 40 and 120 degrees F. Enclosure and auxiliary heat shall be provided to maintain air temperature above 32 degrees F. Temperature of units when laid shall not be less than 20 degrees F.

3.1.2.2 Completed Masonry and Masonry Not Being Worked On

a. Mean daily air temperature 40 to 32 degrees F. Masonry shall be protected from rain or snow for 24 hours by covering with weather-resistive membrane.

b. Mean daily air temperature 32 to 25 degrees F. Masonry shall be completely covered with weather-resistant membrane for 24 hours.

c. Mean Daily Air Temperature 25 to 20 degrees F. Masonry shall be completely covered with insulating blankets or equally protected for 24 hours.

d. Mean Daily Temperature 20 degrees F and Below. Masonry temperature shall be maintained above 32 degrees F for 24 hours by enclosure and supplementary heat, by electric heating blankets, infrared heat lamps, or other approved methods.

3.2 LAYING MASONRY UNITS

Masonry units shall be laid in running bond pattern. Facing courses shall be level with back-up courses, unless the use of adjustable ties has been approved in which case the tolerances shall be plus or minus 1/2 inch. Each unit shall be adjusted to its final position while mortar is still soft and plastic. Units that have been disturbed after the mortar has stiffened shall be removed, cleaned, and relaid with fresh mortar. Air spaces, cavities, chases, expansion joints, and spaces to be grouted shall be kept free from mortar and other debris. Units used in exposed masonry surfaces shall be selected from those having the least amount of chipped edges or other imperfections detracting from the appearance of the finished work. Vertical joints shall be kept plumb. Units being laid and surfaces to receive units shall be free of water film and frost. Solid units shall be laid in a nonfurrowed full bed of mortar. Mortar for veneer wythes shall be beveled and sloped toward the center of the wythe from the cavity side. Units shall be shoved into place so that the vertical joints are tight. Vertical joints of brick and the vertical face shells of concrete masonry units, except where indicated at control, expansion, and isolation joints, shall be completely filled with mortar. Mortar will be permitted to protrude up to 1/2 inch into the space or cells to be grouted. Means shall be provided to prevent mortar from dropping into the space below. In double wythe construction, the inner wythe may be brought up not more than 16 inches ahead of the outer wythe.

3.2.1 Surface Preparation

Surfaces upon which masonry is placed shall be cleaned of laitance, dust, dirt, oil, organic matter, or other foreign materials and shall be slightly roughened to provide a surface texture with a depth of at least 1/8 inch. Sandblasting shall be used, if necessary, to remove laitance from pores and to expose the aggregate.

3.2.2 Forms and Shores

Forms and shores shall be sufficiently rigid to prevent deflections which may result in cracking or other damage to supported masonry and sufficiently tight to prevent leakage of mortar and grout. Supporting forms and shores shall not be removed in less than 10 days.

3.2.3 Concrete Masonry Units

Units in piers, pilasters, columns, starting courses on footings, solid foundation walls, lintels, and beams, and where cells are to be filled with grout shall be full bedded in mortar under both face shells and webs. Other units shall be full bedded under both face shells. Head joints shall be filled solidly with mortar for a distance in from the face of the unit not less than the thickness of the face shell. Jamb units shall be of the shapes and sizes to conform with wall units. Solid units may be incorporated in the masonry work where necessary to fill out at corners, gable slopes, and elsewhere as approved. Walls and partitions shall be adequately reinforced for support of wall-hung plumbing fixtures when chair carriers are not specified.

3.2.4 Tolerances

Masonry shall be laid plumb, true to line, with courses level. Bond pattern shall be kept plumb throughout. Corners shall be square unless noted otherwise. Except for walls constructed of prefaced concrete masonry units, masonry shall be laid within the following tolerances (plus or minus unless otherwise noted):

TABLE II

TOLERANCES

Variation from the plumb in the lines and surfaces of columns, walls and arises	
In adjacent masonry units	1/8 inch
In 10 feet	1/4 inch
In 20 feet	3/8 inch
In 40 feet or more	1/2 inch
Variations from the plumb for external corners, expansion joints, and other conspicuous lines	
In 20 feet	1/4 inch
In 40 feet or more	1/2 inch
Variations from the level for exposed lintels, sills, parapets, horizontal grooves, and other conspicuous lines	
In 20 feet	1/4 inch
In 40 feet or more	1/2 inch
Variation from level for bed joints and top surfaces of bearing walls	
In 10 feet	1/4 inch
In 40 feet or more	1/2 inch
Variations from horizontal lines	
In 10 feet	1/4 inch
In 20 feet	3/8 inch
In 40 feet or more	1/2 inch
Variations in cross sectional dimensions of columns and in thickness of walls	
Minus	1/4 inch
Plus	1/2 inch

3.2.5 Cutting and Fitting

Full units of the proper size shall be used wherever possible, in lieu of cut units. Cutting and fitting, including that required to accommodate the work of others, shall be done by masonry mechanics using power masonry saws. Concrete masonry units may be wet or dry cut. Wet cut units, before being placed in the work, shall be dried to the same surface-dry appearance as uncut units being laid in the wall. Cut edges shall be clean, true and sharp. Openings in the

masonry shall be made carefully so that wall plates, cover plates or escutcheons required by the installation will completely conceal the openings and will have bottoms parallel with the masonry bed joints. Reinforced masonry lintels shall be provided above openings over 12 inches wide for pipes, ducts, cable trays, and other wall penetrations, unless steel sleeves are used.

3.2.6 Jointing

Joints shall be tooled when the mortar is thumbprint hard. Horizontal joints shall be tooled last. Joints shall be brushed to remove all loose and excess mortar. Mortar joints shall be finished as follows:

3.2.6.1 Flush Joints

Joints in concealed masonry surfaces and joints at electrical outlet boxes in wet areas shall be flush cut. Flush cut joints shall be made by cutting off the mortar flush with the face of the wall.

3.2.6.2 Tooled Joints

Joints in exposed exterior and interior masonry surfaces shall be tooled slightly concave . Joints shall be tooled with a jointer slightly larger than the joint width so that complete contact is made along the edges of the unit. Tooling shall be performed so that the mortar is compressed and the joint surface is sealed. Jointer of sufficient length shall be used to obtain a straight and true mortar joint.

3.2.6.3 Door and Window Frame Joints

On the exposed interior side of exterior frames, joints between frames and abutting masonry walls shall be raked to a depth of 3/8 inch. On the exterior side of exterior frames, joints between frames and abutting masonry walls shall be raked to a depth of 3/8 inch.

3.2.7 Joint Widths

Joint widths shall be as follows:

3.2.7.1 Concrete Masonry Units

Concrete masonry units shall have 3/8 inch joints.

3.2.8 Embedded Items

Spaces around built-in items shall be filled with mortar. Openings around flush-mount electrical outlet boxes in wet locations shall be pointed with mortar. Anchors, ties, wall plugs, accessories, flashing, pipe sleeves and other items required to be built-in shall be embedded as the masonry work progresses. Anchors, ties and joint reinforcement shall be fully embedded in the mortar. Cells receiving anchor bolts and cells of the first course below bearing plates shall be filled with grout.

3.2.9 Unfinished Work

Unfinished work shall be stepped back for joining with new work. Toothing may be resorted to only when specifically approved. Loose mortar shall be removed and the exposed joints shall be thoroughly cleaned before laying new work.

3.2.10 Masonry Wall Intersections

Each course shall be masonry bonded at corners and elsewhere as shown. Masonry walls shall be anchored or tied together at corners and intersections with bond beam reinforcement and prefabricated corner or tee pieces of joint reinforcement

as shown.

3.2.11 Partitions

Partitions shall be continuous from floor to underside of floor or roof deck where shown. Openings in firewalls around joists or other structural members shall be filled as indicated or approved. An isolation joint shall be placed in the intersection between partitions and structural or exterior walls as shown. Interior partitions having masonry walls over 4 inches thick shall be tied together with joint reinforcement. Partitions containing joint reinforcement shall be provided with prefabricated pieces at corners and intersections or partitions.

3.3 ANCHORED VENEER CONSTRUCTION

The inner and outer wythes shall be completely separated by a continuous airspace as shown on the drawings. Both the inner and the outer wythes shall be laid up together except when adjustable joint reinforcement assemblies are approved for use. When both wythes are not brought up together, through-wall flashings shall be protected from damage until they are fully enclosed in the wall. The airspace between the wythes shall be kept clear and free of mortar droppings by temporary wood strips laid on the wall ties and carefully lifted out before placing the next row of ties. A coarse gravel or drainage material shall be placed behind the weep holes in the cavity to a minimum depth of 4 inches of coarse aggregate or 10 inches of drainage material to keep mortar droppings from plugging the weep holes.

3.4 WEEP HOLES

Weep holes shall be provided not more than 24 inches on centers in mortar joints of the exterior wythe above wall flashing, over foundations, bond beams, and any other horizontal interruptions of the cavity. Weep holes shall be formed by placing short lengths of well-greased No. 10, 5/16 inch nominal diameter, braided cotton sash cord in the mortar and withdrawing the cords after the wall has been completed. Other approved methods may be used for providing weep holes. Weep holes shall be kept free of mortar and other obstructions.

3.5 MORTAR

Mortar shall be mixed in a mechanically operated mortar mixer for at least 3 minutes, but not more than 5 minutes. Measurement of ingredients for mortar shall be by volume. Ingredients not in containers, such as sand, shall be accurately measured by the use of measuring boxes. Water shall be mixed with the dry ingredients in sufficient amount to provide a workable mixture which will adhere to the vertical surfaces of masonry units. Mortar that has stiffened because of loss of water through evaporation shall be retempered by adding water to restore the proper consistency and workability. Mortar that has reached its initial set or that has not been used within 2-1/2 hours after mixing shall be discarded.

3.6 REINFORCING STEEL

Reinforcement shall be cleaned of loose, flaky rust, scale, grease, mortar, grout, or other coating which might destroy or reduce its bond prior to placing grout. Bars with kinks or bends not shown on the drawings shall not be used. Reinforcement shall be placed prior to grouting. Unless otherwise indicated, vertical wall reinforcement shall extend to within 2 inches of tops of walls.

3.6.1 Positioning Bars

Vertical bars shall be accurately placed within the cells at the positions indicated on the drawings. A minimum clearance of 1/2 inch shall be maintained between the bars and masonry units. Minimum clearance between parallel bars

shall be one diameter of the reinforcement. Vertical reinforcing may be held in place using bar positioners located near the ends of each bar and at intermediate intervals of not more than 192 diameters of the reinforcement. Column and pilaster ties shall be wired in position around the vertical steel. Ties shall be in contact with the vertical reinforcement and shall not be placed in horizontal bed joints.

3.6.2 Splices

Bars shall be lapped a minimum of 48 diameters of the reinforcement. Welded or mechanical connections shall develop at least 125 percent of the specified yield strength of the reinforcement.

3.7 JOINT REINFORCEMENT

Joint reinforcement shall be installed at 16 inches on center or as indicated. Reinforcement shall be lapped not less than 6 inches. Prefabricated sections shall be installed at corners and wall intersections. The longitudinal wires of joint reinforcement shall be placed to provide not less than 5/8 inch cover to either face of the unit.

3.8 PLACING GROUT

Cells containing reinforcing bars shall be filled with grout. Hollow masonry units in walls or partitions supporting plumbing, heating, or other mechanical fixtures, voids at door and window jambs, and other indicated spaces shall be filled solid with grout. Cells under lintel bearings on each side of openings shall be filled solid with grout for full height of openings. Walls below grade, lintels, and bond beams shall be filled solid with grout. Units other than open end units may require grouting each course to preclude voids in the units. Grout not in place within 1-1/2 hours after water is first added to the batch shall be discarded. Sufficient time shall be allowed between grout lifts to preclude displacement or cracking of face shells of masonry units. If blowouts, flowouts, misalignment, or cracking of face shells should occur during construction, the wall shall be torn down and rebuilt.

3.8.1 Vertical Grout Barriers for Fully Grouted Walls

Grout barriers shall be provided not more than 30 feet apart, or as required, to limit the horizontal flow of grout for each pour.

3.8.2 Horizontal Grout Barriers

Grout barriers shall be embedded in mortar below cells of hollow units receiving grout.

3.8.3 Cleanouts

3.8.3.1 Cleanouts for Hollow Unit Masonry Construction

Cleanout holes shall be provided at the bottom of every pour in cores containing vertical reinforcement when the height of the grout pour exceeds 5 feet. Where all cells are to be grouted, cleanout courses shall be constructed using bond beam units in an inverted position to permit cleaning of all cells. Cleanout holes shall be provided at a maximum spacing of 32 inches where all cells are to be filled with grout. A new series of cleanouts shall be established if grouting operations are stopped for more than 4 hours. Cleanouts shall not be less than 3 by 4 inch openings cut from one face shell. Manufacturer's standard cutout units may be used at the Contractor's option. Cleanout holes shall not be closed until masonry work, reinforcement, and final cleaning of the grout spaces have been completed and inspected. For walls which will be exposed to view, cleanout holes shall be closed in an approved manner to match surrounding masonry.

3.8.4 Grouting Equipment

3.8.4.1 Grout Pumps

Pumping through aluminum tubes will not be permitted. Pumps shall be operated to produce a continuous stream of grout without air pockets, segregation, or contamination. Upon completion of each day's pumping, waste materials and debris shall be removed from the equipment, and disposed of outside the masonry.

3.8.4.2 Vibrators

Internal vibrators shall maintain a speed of not less than 5,000 impulses per minute when submerged in the grout. At least one spare vibrator shall be maintained at the site at all times. Vibrators shall be applied at uniformly spaced points not further apart than the visible effectiveness of the machine. Duration of vibration shall be limited to time necessary to produce satisfactory consolidation without causing segregation.

3.8.5 Grout Placement

Masonry shall be laid to the top of a pour before placing grout. Grout shall not be placed in two-wythe solid unit masonry cavity until mortar joints have set for at least 3 days during hot weather and 5 days during cold damp weather. Grout shall not be placed in hollow unit masonry until mortar joints have set for at least 24 hours. Grout shall be placed using a hand bucket, concrete hopper, or grout pump to completely fill the grout spaces without segregation of the aggregates. Vibrators shall not be inserted into lower pours that are in a semi-solidified state. The height of grout pours and type of grout used shall be limited by the dimensions of grout spaces as indicated in Table III. Low-lift grout methods may be used on pours up to and including 5 feet in height. High-lift grout methods shall be used on pours exceeding 5 feet in height.

3.8.5.1 Low-Lift Method

Grout shall be placed at a rate that will not cause displacement of the masonry due to hydrostatic pressure of the grout. Mortar protruding more than 1/2 inch into the grout space shall be removed before beginning the grouting operation. Grout pours 12 inches or less in height shall be consolidated by mechanical vibration or by puddling. Grout pours over 12 inches in height shall be consolidated by mechanical vibration and reconsolidated by mechanical vibration after initial water loss and settlement has occurred. Vibrators shall not be inserted into lower pours that are in a semi-solidified state. Low-lift grout shall be used subject to the limitations of Table III.

3.8.5.2 High-Lift Method

Mortar droppings shall be cleaned from the bottom of the grout space and from reinforcing steel. Mortar protruding more than 1/4 inch into the grout space shall be removed by dislodging the projections with a rod or stick as the work progresses. Reinforcing, bolts, and embedded connections shall be rigidly held in position before grouting is started. CMU units shall not be pre-wetted. Grout, from the mixer to the point of deposit in the grout space shall be placed as rapidly as practical by pumping and placing methods which will prevent segregation of the mix and cause a minimum of grout splatter on reinforcing and masonry surfaces not being immediately encased in the grout lift. The individual lifts of grout shall be limited to 4 feet in height. The first lift of grout shall be placed to a uniform height within the pour section and vibrated thoroughly to fill all voids. This first vibration shall follow immediately behind the pouring of the grout using an approved mechanical vibrator. After a waiting period sufficient to permit the grout to become plastic, but before it has taken any set, the succeeding lift shall be poured

and vibrated 12 to 18 inches into the preceding lift. If the placing of the succeeding lift is going to be delayed beyond the period of workability of the preceding, each lift shall be reconsolidated by reworking with a second vibrator as soon as the grout has taken its settlement shrinkage. The waiting, pouring, and reconsolidation steps shall be repeated until the top of the pour is reached. The top lift shall be reconsolidated after the required waiting period. The high-lift grouting of any section of wall between vertical grout barriers shall be completed to the top of a pour in one working day unless a new series of cleanout holes is established and the resulting horizontal construction joint cleaned. High-lift grout shall be used subject to the limitations in Table III.

TABLE III

POUR HEIGHT AND TYPE OF GROUT FOR VARIOUS GROUT SPACE DIMENSIONS

Maximum Grout Pour Height (feet) (4)	Grout Type	Grouting Procedure	Minimum Dimensions of the Total Clear Areas Within Grout Spaces and Cells (in.) (1,2) Multiwythe Masonry (3)	Hollow-unit Masonry
1	Fine	Low Lift	3/4	1-1/2 x 2
5	Fine	Low Lift	2	2 x 3
8	Fine	High Lift	2	2 x 3
12	Fine	High Lift	2-1/2	2-1/2 x 3
24	Fine	High Lift	3	3 x 3
1	Coarse	Low Lift	1-1/2	1-1/2 x 3
5	Coarse	Low Lift	2	2-1/2 x 3
8	Coarse	High Lift	2	3 x 3
12	Coarse	High Lift	2-1/2	3 x 3
24	Coarse	High Lift	3	3 x 4

Notes:

(1) The actual grout space or cell dimension must be larger than the sum of the following items:
a) The required minimum dimensions of total clear areas given in the table above;
b) The width of any mortar projections within the space;
c) The horizontal projections of the diameters of the horizontal reinforcing bars within a cross section of the grout space or cell.

(2) The minimum dimensions of the total clear areas shall be made up of one or more open areas, with at least one area being 3/4 inch or greater in width.

(3) For grouting spaces between masonry wythes.

(4) Where only cells of hollow masonry units containing reinforcement are grouted, the maximum height of the pour shall not exceed the distance between horizontal bond beams.

3.9 BOND BEAMS

Bond beams shall be filled with grout and reinforced as indicated on the drawings. Grout barriers shall be installed under bond beam units to retain the grout as required. Reinforcement shall be continuous, including around corners, except through control joints or expansion joints, unless otherwise indicated on the drawings. Where splices are required for continuity, reinforcement shall be lapped 48 bar diameters. A minimum clearance of 1/2 inch shall be maintained between reinforcement and interior faces of units.

3.10 CONTROL JOINTS

Control joints shall be provided as indicated and shall be constructed by using mortar to fill the head joint in accordance with the details shown on the drawings. The vertical mortar joint at control joint locations shall be continuous, including through all bond beams. This shall be accomplished by utilizing half blocks in alternating courses on each side of the joint. Exposed interior control joints shall be raked to a depth of 1/4 inch. Concealed control joints shall be flush cut.

3.11 CONCRETE MASONRY VENEER JOINTS

concrete masonry veneer joints shall be provided and constructed as shown on the drawings. Joints shall be kept free of mortar and other debris.

3.12 SHELF ANGLES

Shelf angles shall be adjusted as required to keep the masonry level and at the proper elevation. Shelf angles shall be galvanized. Shelf angles shall be provided in sections not longer than 10 feet and installed with a 1/4 inch gap between sections. Shelf angles shall be mitered and welded at building corners with each angle not shorter than 4 feet, unless limited by wall configuration.

3.13 LINTELS

3.13.1 Masonry Lintels

Masonry lintels shall be constructed with lintel units filled solid with grout in all courses and reinforced with a minimum of two No. 4 bars in the bottom course unless otherwise indicated on the drawings. Lintel reinforcement shall extend beyond each side of masonry opening 40 bar diameters or 24 inches, whichever is greater. Reinforcing bars shall be supported in place prior to grouting and shall be located 1/2 inch above the bottom inside surface of the lintel unit.

3.14 ANCHORAGE TO CONCRETE

3.14.1 Anchorage to Concrete

Anchorage of masonry to the face of concrete columns, beams, or walls shall be with dovetail anchors spaced not over 16 inches on centers vertically and 24 inches on center horizontally.

3.15 INSULATION

Anchored veneer walls shall be insulated, where shown, by installing board-type insulation on the cavity side of the inner wythe. Board type insulation shall be applied directly to the masonry or thru-wall flashing with adhesive. Insulation shall be neatly fitted between obstructions without impaling of insulation on ties or anchors. The insulation shall be applied in parallel courses with vertical joints breaking midway over the course below and shall be applied in moderate contact with adjoining units without forcing, and shall be cut to fit neatly against adjoining surfaces.

3.16 SPLASH BLOCKS

Splash blocks shall be located as shown.

3.17 POINTING AND CLEANING

After mortar joints have attained their initial set, but prior to hardening, mortar and grout daubs or splashings shall be completely removed from

masonry-unit surfaces that will be exposed or painted. Before completion of the work, defects in joints of masonry to be exposed or painted shall be raked out as necessary, filled with mortar, and tooled to match existing joints. Immediately after grout work is completed, scum and stains which have percolated through the masonry work shall be removed using a high pressure stream of water and a stiff bristled brush. Masonry surfaces shall not be cleaned, other than removing excess surface mortar, until mortar in joints has hardened. Masonry surfaces shall be left clean, free of mortar daubs, dirt, stain, and discoloration, including scum from cleaning operations, and with tight mortar joints throughout. Metal tools and metal brushes shall not be used for cleaning.

3.17.1 Concrete Masonry Unit and

Exposed concrete masonry unit and shall be dry-brushed at the end of each day's work and after any required pointing, using stiff-fiber bristled brushes.

3.18 BEARING PLATES

Bearing plates for beams, joists, joist girders and similar structural members shall be set to the proper line and elevation with damp-pack bedding mortar. Bedding mortar shall be as specified in Section 03300 CAST-IN-PLACE STRUCTURAL CONCRETE.

3.19 PROTECTION

Facing materials shall be protected against staining. Top of walls shall be covered with nonstaining waterproof covering or membrane when work is not in progress. Covering of the top of the unfinished walls shall continue until the wall is waterproofed with a complete roof or parapet system. Covering shall extend a minimum of 2 feet down on each side of the wall and shall be held securely in place. Before starting or resuming, top surface of masonry in place shall be cleaned of loose mortar and foreign material.

3.20 TEST REPORTS

3.20.1 Field Testing of Mortar

At least three specimens of mortar shall be taken each day. A layer of mortar 1/2 to 5/8 inch thick shall be spread on the masonry units and allowed to stand for one minute. The specimens shall then be prepared and tested for compressive strength in accordance with ASTM C 780.

3.20.2 Field Testing of Grout

Field sampling and testing of grout shall be in accordance with the applicable provisions of ASTM C 1019. A minimum of three specimens of grout per day shall be sampled and tested. Each specimen shall have a minimum ultimate compressive strength of 2000 psi at 28 days.

-- End of Section --

SECTION TABLE OF CONTENTS

DIVISION 05 - METALS

SECTION 05106

ROLLING COVER (CUSTOM FABRICATED)

03/99; Rev. 12/00

PART 1 GENERAL

1.1 REFERENCES
1.2 SUBMITTALS
1.3 METALWORK AND MACHINE WORK DETAIL DRAWINGS
1.4 Welder Qualifications
1.5 WORKMANSHIP

PART 2 PRODUCTS

2.1 MATERIALS
2.1.1 Bolts and Cap Screws
2.1.2 Nuts
2.1.3 Washers
2.1.4 Tube Steel
2.1.5 Rolling Cover Shell
2.1.5.1 Structural Steel
2.1.5.2 Aluminum
2.2 WHEELS
2.2.1 Axles

PART 3 EXECUTION

3.1 FABRICATION
3.1.1 General
3.1.2 Dimensional Tolerances
3.1.3 Steel
3.1.4 Aluminum
3.1.5 Bolted Connections
3.1.5.1 Bolted Steel Connections
3.1.5.2 Bolted Aluminum Connections
3.2 MACHINE WORK
3.2.1 Finished Surfaces
3.2.2 Unfinished Surfaces
3.3 MISCELLANEOUS PROVISIONS
3.3.1 Metallic Coatings
3.3.2 Cleaning of Stainless Steel
3.4 WELDING
3.4.1 Welding of Structural Steel
3.4.2 Welding of Aluminum
3.4.3 Welding Inspection
3.4.3.1 Visual Examination
3.4.4 Steel Welding Repairs
3.5 ASSEMBLY
3.6 PROTECTION OF FINISHED WORK
3.6.1 Lubrication After Assembly
3.6.2 Aluminum
3.7 SHOP TESTING
3.7.1 Wheel Assembly Testing
3.7.2 Assembly Tests

3.8 PREPARATION FOR SHIPPING
3.9 ACCEPTANCE TESTING

-- End of Section Table of Contents --

SECTION 05106

ROLLING COVER (CUSTOM FABRICATED)
03/99; Rev. 12/00

PART 1 GENERAL

This specification covers the factory fabrication, assembly, testing, and shipping requirements for custom fabricated rolling covers having steel or aluminum shells as indicated in vault schedule on the vault drawings. Covers are to be field installed by other than the manufacturer on variously sized new and/or existing hydrant fueling system vaults and tanks.

1.1 REFERENCES

The publications listed below form a part of this specification to the extent referenced. The publications are referred to in the text by basic designation only.

ALUMINUM ASSOCIATION (AA)

AA SAS-30	(1986) Specifications for Aluminum Structures

ASME INTERNATIONAL (ASME)

ASME B4.1	(1967; R 1999) Preferred Limits and Fits for Cylindrical Parts
ASME B46.1	(1995) Surface Texture (Surface Roughness, Waviness, and Lay)
ASME BPV IX	(1998) Boiler and Pressure Vessel Code; Section IX, Welding and Brazing Qualifications

AMERICAN SOCIETY FOR TESTING AND MATERIALS (ASTM)

ASTM A 36/A 36M	(2001) Carbon Structural Steel
ASTM A 123/A 123M	(2000) Zinc (Hot-Dip Galvanized) Coatings on Iron and Steel Products
ASTM A 276	(1998b) Stainless Steel Bars and Shapes
ASTM A 307	(2000) Carbon Steel Bolts and Studs, 60 000 PSI Tensile Strength
ASTM A 500	(1999) Cold-Formed Welded and Seamless Carbon Steel Structural Tubing in Rounds and Shapes
ASTM A 563	(1997) Carbon and Alloy Steel Nuts
ASTM B 209	(1996) Aluminum and Aluminum-Alloy Sheet and Plate

AMERICAN WELDING SOCIETY (AWS)

AWS D1.1	(2000) Structural Welding Code - Steel
AWS D1.2	(1997) Structural Welding Code - Aluminum

1.2 SUBMITTALS

Government approval is required for submittals with a "G" designation; submittals not having a "G" designation are for information only. When used, a designation following the "G" designation identifies the office that will review the submittal for the Government. The following shall be submitted in accordance with Section 01330 SUBMITTAL PROCEDURES:

SD-01 Preconstruction Submittals

Assembly Test; G-RE.

A letter, at least 10 working days in advance, advising the contracting officer of the Assembly Test.

Acceptance Testing; G-RE.

A letter, at least 7 days in advance, advising the contracting officer of the Acceptance Test.

SD-02 Shop Drawings

Detail Drawings; G-AE.

Detail drawings for metalwork and machine work shall be submitted and approved prior to fabrication. Detail drawings shall include a sketch showing final wheel to axle mouinting (i.e., washers, nuts, spacers).

SD-03 Product Data

Wheels; G-AE.

To include wheel manufacturer's catalogue cuts and dimensional sheets. Data shall contain a description of the item, materials of construction, and dimensions. Submittal shall include data sufficient to indicate compliance with specifications. Items pertaining to specifications shall be marked with a heavy black arrow.

Materials List; G-AE.

Materials list for fabricated items shall be submitted at the time of submittal of detail drawings.

Welding; G-AE

WPS not prequalified.

Welding of Aluminum; G-AE.

Schedules of welding processes for aluminum fabrications shall be submitted and approved prior to commencing fabrication.

Steel Welding Repairs; G-AE.

Welding repair plans for steel shall be submitted and approved prior to making repairs.

SD-07 Certificates

Welder Qualifications

Certified copies of welder qualifications test records showing qualification in accordance with AWS D1.1.

Welding of Aluminum; G-AE.

Certified report for aluminum welding qualification tests shall be submitted and approved prior to commencing welding.

1.3 METALWORK AND MACHINE WORK DETAIL DRAWINGS

Detail drawings for metalwork and machine work shall include catalog cuts, templates, fabrication and assembly details, and type, grade, and class of material as appropriate. Elements of fabricated items inadvertently omitted on contract drawings shall be detailed by the fabricator and indicated on the detail drawings. Drawings shall include all dimensional and tolerance data for each size of vault being fabricated.

1.4 Welder Qualifications

The Contractor shall certify that the welders, welding operators and tack welders who will perform structural steel welding have been qualified for the particular type of work to be done in accordance with the requirements of AWS D1.1, Section 4, prior to commencing fabrication. The certificate shall list the qualified welders by name and shall specify the code and procedures under which qualified and the date of qualification. Prior qualification will be accepted if welders have performed satisfactory work under the code for which qualified within the preceding three months. The Contractor shall require welders to repeat the qualifying tests when their work indicates a reasonable doubt as to proficiency. Those passing the requalification tests will be recertified. Those not passing will be disqualified until passing. All expenses in connection with qualification and requalification shall be borne by the Contractor.

1.5 WORKMANSHIP

Workmanship shall be of the highest grade and in accordance with the best modern practices to conform with the specifications for the item of work being furnished. Welding shall be continuous along the entire area of contact except where tack welding is permitted. Exposed connections of work in place shall not be tack welded. Exposed welds shall be ground smooth. Exposed surfaces of work in place shall have a smooth finish.

PART 2 PRODUCTS

2.1 MATERIALS

2.1.1 Bolts and Cap Screws

All bolts shall be steel and shall conform to ASTM A 307, Grade A, Hex.

2.1.2 Nuts

Shall conform to ASTM A 563, Grade A, Hex, and shall be of the same finish as the fasteners they are used with.

2.1.3 Washers

Flat washers shall conform to the requirements of ASTM A 276 (stainless steel).

2.1.4 Tube Steel

Structural tubing shall conform to ASTM A 500, Grade B.

2.1.5 Rolling Cover Shell

Cover shell material shall be as indicated on the drawings and specified as follows:

2.1.5.1 Structural Steel

Carbon grade steel shall conform to ASTM A 36/A 36M.

2.1.5.2 Aluminum

Aluminum sheets and strips shall comply with ASTM B 209, alloy and temper best suited for the purpose.

2.2 WHEELS

Load carrying wheels shall be of the heavy duty industrial type and shall be the product of a company regularly engaged in the production of wheels.
The smaller side wheels may be of standard type. The wheels shall have solid rubber tires that are molded onto spoked or solid centers that are either cast, forged, or machined. The rubber shall have a hardness rating of 80-90 Shore A durometer. Tires shall not stretch or work loose from the metal center. The wheels shall have roller bearings and shall be pressure lubricated from a grease fitting when available. The wheels shall work in a temperature range of -40°F to +200° F. The entire wheel assembly shall be symmetrical and shall spin concentrically around the bearing. Metal centers shall be finished with either an epoxy paint, a powder coating, or shall be manufacture galvanized. The diameter of the carrier wheels shall be 6" and the diameter of the side wheels shall be 3". The fabricator shall use appropriate washers and spacers to lock the inner bearing bushing to the axle. Wheels shall be similar or equal to the following:

6" Dia. x 2" wide - McMaster-Carr Cat.105, Pg. 935 No. 8368T25

3" Dia. x 1 3/8" wide - McMaster-Carr Cat.105, Pg. 935 No. 2319T1

2.2.1 Axles

The axle assembly shall be stainless steel and shall be eccentrically machined. A slotted adjustment cam plate shall be attached to the axle by welding as indicated on the drawings. Eccentric offset shall be a minimum of 1/4 inch. Diameter, tolerance and finish of the mating axle shaft shall be coordinated with the wheel manufacturer's diameters and tolerances for a close fit. All fits and tolerances shall be indicated on the shop drawings. Material, weld, and nut shall all be a 300 series stainless steel.

PART 3 EXECUTION

3.1 FABRICATION

3.1.1 General

Material must be straight before being laid off or worked. If straightening is necessary it shall be done by methods that will not impair the metal. Sharp kinks or bends shall be cause for rejection of the material. Material with welds will not be accepted except where welding is definitely specified, indicated or otherwise approved. Bends shall be made by approved dies, press brakes or bending rolls. Where heating is required, precautions shall be taken to avoid overheating or warping the metal and it shall be allowed to cool in a manner that will not impair the original properties of the metal. Proposed flame cutting of material other than structural steel shall be subject to approval and shall be indicated on detail drawings. Shearing shall be accurate and all portions of the work shall be neatly finished. Corners shall be square

and true unless otherwise shown on the drawings. Re-entrant cuts shall be filleted to a minimum radius of 3/4 inch unless otherwise approved. Finished members shall be free of twists, bends and open joints. Bolts, nuts and screws shall be tight.

3.1.2 Dimensional Tolerances

Dimensions shall be measured by a calibrated steel tape of approximately the same temperature as the material being measured. The overall dimensions of an assembled structural unit shall be within the tolerances indicated on the drawings or as specified in the particular section of these specifications for the item of work. Where tolerances are not specified in other sections of these specifications or shown, an allowable variation of 1/32 inch is permissible in the overall length of component members with both ends milled and component members without milled ends shall not deviate from the dimensions shown by not more than 1/16 inch for members 30 feet or less in length and by more than 1/8 inch for members over 30 feet in length.

3.1.3 Steel

Structural steel may be cut, when approved, by mechanically guided or hand-guided torches, provided an accurate profile with a surface that is smooth and free from cracks and notches is obtained. Surfaces and edges to be welded shall be prepared in accordance with AWS D1.1, Subsection 3.2. Where structural steel is not to be welded, chipping or grinding will not be required except as necessary to remove slag and sharp edges of mechanically guided or hand-guided cuts not exposed to view. Hand-guided cuts which are to be exposed or visible shall be chipped, ground or machined to sound metal.

3.1.4 Aluminum

Laying out and cutting of aluminum shall be in accordance with the AA SAS-30, Section 6.

3.1.5 Bolted Connections

3.1.5.1 Bolted Steel Connections

Bolts, nuts and washers shall be of the type specified or indicated. Beveled washers shall be used where bearing faces have a slope of more than 1:20 with respect to a plane normal to the bolt axis. Bolt holes shall be accurately located, smooth, perpendicular to the member and cylindrical. Holes for Bolts shall be drilled or subdrilled and reamed in the shop and shall not be more than 1/16 inch larger than the diameter of the bolt unless otherwise approved, or as indicated on the drawings or specified below. Poor matching of holes will be cause for rejection. Drifting occurring during assembly shall not distort the metal or enlarge the holes. Reaming to a larger diameter of the next standard size bolt will be allowed for slight mismatching.

3.1.5.2 Bolted Aluminum Connections

Punching, drilling, reaming and bolting for bolted aluminum connections shall conform to the requirements of AA SAS-30, Section 6.

3.2 MACHINE WORK

Tolerances, allowances and gauges for metal fits between plain, non-threaded, cylindrical parts shall conform to ASME B4.1 for the class of fit shown or required unless otherwise shown on approved detail drawings. Where fits are not shown they shall be suitable as approved. Tolerances for machine-finished surfaces designated by non-decimal dimensions shall be within 1/64 inch, unless otherwise indicated on the drawings. Sufficient machining stock shall be allowed to ensure true surfaces of solid material. Assembled parts shall be

accurately machined and all like parts shall be interchangeable. All drilled holes shall be accurately located.

3.2.1 Finished Surfaces

Surface finishes indicated or specified herein shall be in accordance with ASME B46.1. Values of required roughness heights are arithmetical average deviations expressed in microinches. These values are maximum. Lesser degrees will be satisfactory unless otherwise indicated. Compliance with surface requirements shall be determined by sense of feel and visual inspection of the work compared to Roughness Comparison Specimens in accordance with the provisions of ASME B46.1. Values of roughness width and waviness height shall be consistent with the general type of finish specified by roughness height. Where the finish is not indicated or specified it shall be that which is most suitable for the particular surface, provide the class of fit required and be indicated on the detail drawings by a symbol which conforms to ASME B46.1 when machine finishing is provided. Flaws such as scratches, ridges, holes, peaks, cracks or checks which will make the part unsuitable for the intended use will be cause for rejection.

3.2.2 Unfinished Surfaces

All work shall be laid out to secure proper matching of adjoining unfinished surfaces unless otherwise directed. Where there is a large discrepancy between adjoining unfinished surfaces they shall be chipped and ground smooth or machined to secure proper alignment. Unfinished surfaces shall be true to the lines and dimensions shown and shall be chipped or ground free of all projections and rough spots. Depressions or holes not affecting the strength or usefulness of the parts shall be filled in an approved manner.

3.3 MISCELLANEOUS PROVISIONS

3.3.1 Metallic Coatings

Zinc Coatings. Zinc coatings shall be applied in a manner and of a thickness and quality conforming to ASTM A 123/A 123M. Where zinc coatings are destroyed by cutting, welding or other causes the affected areas shall be regalvanized. Coatings 2 ounces or heavier shall be regalvanized with a suitable low-melting zinc base alloy similar to the recommendations of the American Hot-Dip Galvanizers Association to the thickness and quality specified for the original zinc coating.

3.3.2 Cleaning of Stainless Steel

Oil, paint and other foreign substances shall be removed from stainless steel surfaces after fabrication. Cleaning shall be done by vapor degreasing or by the use of cleaners of the alkaline, emulsion or solvent type.

3.4 WELDING

3.4.1 Welding of Structural Steel

Welding shall be in accordance with AWS D1.1. Welding procedures which are considered prequalified as specified in AWS D1.1 will be accepted without further qualification. The Contractor shall submit for approval a listing or an annotated drawing to indicate the joints not prequalified. Procedure qualification shall be required for these joints.

3.4.2 Welding of Aluminum

Welding of aluminum shall conform to AA SAS-30 or AWS D1.2, Sections 1 through 7, 9 and 10. The welding process and welding operators shall be prequalified as required by AWS D1.2, Section 5 or AA SAS-30, Subsection 7.2.4 in accordance

with the methods described in ASME BPV IX, Section IX. A certified report giving the results of the qualifying tests shall be furnished for approval. A complete schedule of the welding process for each aluminum fabrication to be welded shall be furnished for approval.

3.4.3 Welding Inspection

The Contractor shall maintain an approved inspection system and perform required inspections in accordance with Contract Clause CONTRACTOR INSPECTION SYSTEM. Welding shall be subject to inspection to determine conformance with the requirements of AWS D1.1, the approved welding procedures and provisions stated in other sections of these specifications.

3.4.3.1 Visual Examination

All completed welds shall be cleaned and carefully examined for insufficient throat or leg sizes, cracks, undercutting, overlap, excessive convexity or reinforcement and other surface defects to ensure compliance with the requirements of AWS D1.1, Section 3 and Section 9, Part D.

3.4.4 Steel Welding Repairs

Defective welds shall be repaired in accordance with AWS D1.1, Section 5. Defective weld metal shall be removed to sound metal by use of air carbon-arc or oxygen gouging. The surfaces shall be thoroughly cleaned before welding. Welds that have been repaired shall be retested by the same methods used in the original inspection. Costs for repairs and retesting shall be borne by the Contractor. Repair procedure shall be submitted for approval prior to doing repair.

3.5 ASSEMBLY

All parts to be assembled shall be thoroughly cleaned. Packing compounds, rust, dirt, grit and other foreign matter shall be removed. Holes and grooves for lubrication shall be cleaned. Enclosed chambers or passages shall be examined to make sure that they are free from damaging materials. Where units or items are shipped as assemblies they will be inspected prior to installation. Pipe wrenches, cold chisels or other tools likely to cause damage to the surfaces of rods, nuts or other parts shall not be used for assembling and tightening parts. Bolts and screws shall be tightened firmly and uniformly but care shall be taken not to overstress the threads. When a half nut is used for locking a full nut the half nut shall be placed first and followed by the full nut. Threads of all bolts, nuts and screws shall be lubricated with a lubricant before assembly. Threads of corrosion-resisting steel bolts and nuts shall be coated with an approved antigalling compound. Driving and drifting bolts or keys will not be permitted.

3.6 PROTECTION OF FINISHED WORK

3.6.1 Lubrication After Assembly

After assembly all wheels shall be pressure lubricated or oiled.

3.6.2 Aluminum

Aluminum in contact with structural steel in the area of the cover shell fastener angle clips shall be protected against galvanic or corrosive action by being given a coat of zinc-chromate primer and a coat of aluminum paint.

3.7 SHOP TESTING

3.7.1 Wheel Assembly Testing

The first wheel assembly shall be tested for correct fit and operation in the presence of the Contracting Officer unless otherwise waived in writing. The wheel shall rotate concentricly and smoothly on the bearings. The cam adjuster shall provide at least 1/8 inch of adjustment in each vertical direction. Waiving of tests will not relieve the Contractor of responsibility for any fault in operation, workmanship or material that occurs before the completion of the contract or guarantee.

3.7.2 Assembly Tests

Each rolling cover including the shell, carrier, frame, and temporary brackets shall be assembled in the shop to determine the correctness of the fabrication and matching of the component parts. Tolerances shall not exceed those shown on the drawings. Each cover assembly shall be closely checked to ensure that all necessary clearances have been provided and that binding does not occur in any moving part. Assembly in the shop shall be done on a straight and level floor or platform, the frame shall be mounted on temporary supports in a level position. The carrier shall move smoothly and with minimal effort. Misalignment or poor operation, or defects disclosed shall be immediately remedied by the Contractor without cost to the Government. Assembly, testing, and disassembly work shall be performed in the presence of the Contracting Officer unless waived in writing. Ten working days notice of the first rolling cover assembly shall be given the Contracting Officer.

3.8 PREPARATION FOR SHIPPING

Before disassembly for shipment each rolling cover subassembly shall be match-mark stamped (or as otherwise approved) to facilitate correct reassembly in the field. The location of stampings shall be indicated by circling with a ring of white chalk after the shop finish has been applied or as otherwise directed. Each subassembly shall be wood crated, slatted, skid mounted, or otherwise packaged such that abrasion does not occur during shipment.

3.9 ACCEPTANCE TESTING

The rolling cover shall be field tested by the contractor to ensure proper wheel adjustments to eliminate binding and track misalignment. In addition contractor shall demonstrate to the Contracting Officer's Representative that the cover, and cover tracks are level. The rolling cover shall be rolled the full distance of the tracks. The test shall be repeated a sufficient number of times (minimum of three) to demonstrate proper operation. Misalignment or poor operation, or defects disclosed shall be immediately remedied by the Contractor without cost to the Government. The Contractor shall provide all personnel necessary to conduct the tests. Testing shall be performed in the presence of Contracting Officer. The Contractor shall notify the Contracting Officer 7 days prior to testing operations.

-- End of Section --

SECTION TABLE OF CONTENTS

DIVISION 05 - METALS

SECTION 05120

STRUCTURAL STEEL

07/02

PART 1 GENERAL

1.1 REFERENCES
1.2 SYSTEM DESCRIPTION
1.3 MODIFICATIONS TO REFERENCES
1.4 SUBMITTALS
1.5 QUALITY ASSURANCE
1.5.1 Drawing Requirements
1.5.2 Certifications
1.5.2.1 Erection Plan
1.5.2.2 Welding Procedures and Qualifications

PART 2 PRODUCTS

2.1 STEEL
2.1.1 Structural Steel
2.1.2 Structural Steel Tubing
2.2 BOLTS, NUTS, AND WASHERS
2.2.1 Structural Steel
2.2.1.1 Bolts
2.2.1.2 Nuts
2.2.1.3 Washers
2.2.2 Foundation Anchorage
2.2.2.1 Bolts
2.2.2.2 Nuts
2.2.2.3 Washers
2.3 STRUCTURAL STEEL ACCESSORIES
2.3.1 Welding Electrodes and Rods
2.3.2 Welded Shear Stud Connectors
2.4 SHOP PRIMER
2.5 FABRICATION
2.5.1 Markings
2.5.2 Shop Primer
2.5.2.1 Cleaning
2.5.2.2 Primer

PART 3 EXECUTION

3.1 FABRICATION
3.2 INSTALLATION
3.3 ERECTION
3.3.1 STORAGE
3.4 CONNECTIONS
3.4.1 Common Grade Bolts
3.4.2 High-Strength Bolts
3.5 WELDING
3.5.1 Removal of Temporary Welds, Run-Off Plates, and Backing Strips
3.6 SHOP PRIMER REPAIR
3.6.1 Field Priming
3.7 FIELD QUALITY CONTROL

3.7.1 Welds
3.7.1.1 Visual Inspection

-- End of Section Table of Contents --

SECTION 05120

STRUCTURAL STEEL
07/02

PART 1 GENERAL

1.1 REFERENCES

The publications listed below form a part of this specification to the extent referenced. The publications are referred to in the text by the basic designation only.

AMERICAN INSTITUTE OF STEEL CONSTRUCTION (AISC)

AISC Design Guide No. 10	(1989) Erection Bracing of Low-Rise Structural Steel Frames
AISC M013	(1983) Detailing for Steel Construction
AISC M016	(1989) ASD Manual of Steel Construction
AISC M017	(1992; Errata 1994) Connections
AISC S303	(1992) Steel Buildings and Bridges
AISC S329	(1985) Allowable Stress Design Specification for Structural Joints Using ASTM A325 or A490 Bolts
AISC S335	(1989) Structural Steel Buildings Allowable Stress Design and Plastic Design
AISC S340	(1992) Metric Properties of Structural Shapes with Dimensions According to ASTM A6M

AMERICAN SOCIETY FOR TESTING AND MATERIALS (ASTM)

ASTM A36/A36M	(1997; Rev. A) Carbon Structural Steel
ASTM A307	(2000) Carbon Steel Bolts and Studs, 60 000 PSI Tensile Strength
ASTM A325	(1997) Structural Bolts, Steel, Heat Treated, 120/105 ksi Minimum Tensile Strength
ASTM A500	(1999) Cold-Formed Welded and Seamless Carbon Steel Structural Tubing in Rounds and Shapes
ASTM A563	(1997) Carbon and Alloy Steel Nuts
ASTM F436	(1993) Hardened Steel Washers
ASTM F844	(1998) Washers, Steel, Plain (Flat), Unhardened for General Use

AMERICAN WELDING SOCIETY (AWS)

AWS D1.1	(2000) Structural Welding Code - Steel

STEEL STRUCTURES PAINTING COUNCIL (SSPC)

SSPC SP 3	(1995) Power Tool Cleaning
SSPC SP 6	(2000) Commercial Blast Cleaning
SSPC Paint 25	(1991) Red Iron Oxide, Zinc Oxide, Raw Linseed Oil and Alkyd Primer (Without Lead and Chromate Pigments)
SSPC PA 1	(2000) Shop, Field, and Maintenance Painting
SSPC PS 13.01	(1991) Epoxy-Polyamide Painting System

1.2 SYSTEM DESCRIPTION

Provide the structural steel system, including shop primer, complete and ready for use. Structural steel systems including design, materials, installation, workmanship, fabrication, assembly, erection, inspection, quality control, and testing shall be provided in accordance with AISC M016 and AISC M017 except as modified in this contract.

1.3 MODIFICATIONS TO REFERENCES

In AISC M016, AISC M017, AISC S335, AISC S303, AISC S329, and AISC S340, except as modified in this section, shall be considered a part of AISC M016 and AISC M017 and is referred to in this section as AISC M016 and AISC M017.1.4 SUBMITTALS

Government approval is required for submittals with a "G" designation; submittals not having a "G" designation are for information only or as otherwise designated. When used, a designation following the "G" designation identifies the office that will review the submittal for the Government. The following shall be submitted in accordance with Section 01330 SUBMITTAL PROCEDURES:

SD-02 Shop Drawings

Erection drawings, including description of temporary supports; G-AE

Fabrication drawings, including description of connections; G-AE

SD-03 Product Data

Shop primer

SD-06 Test Reports

Bolts, nuts, and washers

Supply the certified manufacturer's mill reports which clearly show the applicable ASTM mechanical and chemical requirements together with the actual test results for the supplied fasteners.

SD-07 Certificates

Steel

Bolts, nuts, and washers

Shop primer

Welding electrodes and rods

Welding procedures and qualifications

1.5 QUALITY ASSURANCE

1.5.1 Drawing Requirements

Submit fabrication drawings for approval prior to fabrication. Prepare in accordance with AISC M013, AISC M016 and AISC M017. Drawings shall not be reproductions of contract drawings. Include complete information for the fabrication and erection of the structure's components, including the location, type, and size of bolts, welds, member sizes and lengths, connection details, blocks, copes, and cuts. Use AWS standard welding symbols.

1.5.2 Certifications

1.5.2.1 Erection Plan

Submit for record purposes. Indicate the sequence of erection, temporary shoring and bracing, and a detailed sequence of welding, including each welding procedure required.

1.5.2.2 Welding Procedures and Qualifications

Prior to welding, submit certification for each welder stating the type of welding and positions qualified for, the code and procedure qualified under, date qualified, and the firm and individual certifying the qualification tests. If the qualification date of the welding operator is more than one-year old, the welding operator's qualification certificate shall be accompanied by a current certificate by the welder attesting to the fact that he has been engaged in welding since the date of certification, with no break in welding service greater than 6 months.

PART 2 PRODUCTS

2.1 STEEL

2.1.1 Structural Steel

ASTM A36/A36M.

2.1.2 Structural Steel Tubing

ASTM A500, Grade B.

2.2 BOLTS, NUTS, AND WASHERS

Provide the following unless indicated otherwise.

2.2.1 Structural Steel

2.2.1.1 Bolts

ASTM A307, Grade A; ASTM A325, Type 1. The bolt heads and the nuts of the supplied fasteners must be marked with the manufacturer's identification mark, the strength grade and type specified by ASTM specifications.

2.2.1.2 Nuts

ASTM A563, Grade and Style for applicable ASTM bolt standard recommended.

2.2.1.3 Washers

ASTM F844 washers for ASTM A307 bolts, and ASTM F436 washers for ASTM A325 bolts.

2.2.2 Foundation Anchorage

2.2.2.1 Bolts

ASTM A307.

2.2.2.2 Nuts

ASTM A563, Grade A, hex style.

2.2.2.3 Washers

ASTM F844.

2.3 STRUCTURAL STEEL ACCESSORIES

2.3.1 Welding Electrodes and Rods

AWS D1.1.

2.3.2 Welded Shear Stud Connectors

AWS D1.1.

2.4 SHOP PRIMER

SSPC Paint 25, (alkyd primer) or SSPC PS 13.01 epoxy-polyamide, green primer (Form 150) type 1. Primer shall conform to Federal, State, and local VOC regulations. If flash rusting occurs, re-clean the surface prior to application of primer.

2.5 FABRICATION

2.5.1 Markings

Prior to erection, members shall be identified by a painted erection mark. Connecting parts assembled in the shop for reaming holes in field connections shall be match marked with scratch and notch marks. Do not locate erection markings on areas to be welded. Do not locate match markings in areas that will decrease member strength or cause stress concentrations.

2.5.2 Shop Primer

Shop prime structural steel, except as modified herein, in accordance with SSPC PA 1. Do not prime steel surfaces embedded in concrete, galvanized surfaces, or surfaces within 0.5 inch of the toe of the welds prior to welding (except surfaces on which metal decking is to be welded). Prior to assembly, prime surfaces which will be concealed or inaccessible after assembly. Do not apply primer in foggy or rainy weather; when the ambient temperature is below 45 degrees F or over 95 degrees F; or when the primer may be exposed to temperatures below 40 degrees F within 48 hours after application, unless approved otherwise by the Contracting Officer.

2.5.2.1 Cleaning

SSPC SP 6, except steel exposed in spaces above ceilings, attic spaces, furred spaces, and chases that will be hidden to view in finished construction may be cleaned to SSPC SP 3 when recommended by the shop primer manufacturer. Maintain steel surfaces free from rust, dirt, oil, grease, and other contaminants through final assembly.

2.5.2.2 Primer

Apply primer to a minimum dry film thickness of 2.0 mil. Repair damaged primed surfaces with an additional coat of primer.

PART 3 EXECUTION

3.1 FABRICATION

Fabrication shall be in accordance with the applicable provisions of AISC M016. Fabrication and assembly shall be done in the shop to the greatest extent possible. Structural steelwork, except surfaces of steel to be encased in concrete, surfaces to be field welded, surfaces to be fireproofed, and contact surfaces of friction-type high-strength bolted connections shall be prepared for painting in accordance with AISC S303 and primed with the specified paint.

3.2 INSTALLATION

3.3 ERECTION

a: Erection of structural steel, except as indicated in item b. below, shall be in accordance with the applicable provisions of AISC M016. Erection plan shall be reviewed, stamped and sealed by a licensed structural engineer.

b. For low-rise structural steel buildings (60 feet tall or less and a maximum of 2 stories), the erection plan shall conform to AISC S303 and the structure shall be erected in accordance withAISC Design Guide No. 10.

Provide for drainage in structural steel. After final positioning of steel members, provide full bearing under base plates and bearing plates using nonshrink grout. Place nonshrink grout in accordance with the manufacturer's instructions.

3.3.1 STORAGE

Material shall be stored out of contact with the ground in such manner and location as will minimize deterioration.

3.4 CONNECTIONS

Except as modified in this section, connections not detailed shall be designed in accordance with AISC S335. Build connections into existing work. Do not tighten anchor bolts set in concrete with impact torque wrenches. Punch, subpunch and ream, or drill bolt holes. Bolts, nuts, and washers shall be clean of dirt and rust, and lubricated immediately prior to installation.

3.4.1 Common Grade Bolts

ASTM A307 bolts shall be tightened to a "snug tight" fit. "Snug tight" is the tightness that exists when plies in a joint are in firm contact. If firm contact of joint plies cannot be obtained with a few impacts of an impact wrench, or the full effort of a man using a spud wrench, contact the Contracting Officer for further instructions.

3.4.2 High-Strength Bolts

ASTM A325 bolts shall be fully tensioned to 70 percent of their minimum tensile strength. Bolts shall be installed in connection holes and initially brought to a snug tight fit. After the initial tightening procedure, bolts shall then be fully tensioned, progressing from the most rigid part of a connection to the

free edges.

3.5 WELDING

AWS D1.1. Grind exposed welds smooth as indicated. Provide AWS D1.1 qualified welders, welding operators, and tackers.

The contractor shall develop and submit the Welding Procedure Specifications (WPS) for all welding, including welding done using prequalified procedures. Prequalified procedures may be submitted for information only; however, procedures that are not prequalified shall be submitted for approval.

3.5.1 Removal of Temporary Welds, Run-Off Plates, and Backing Strips

Remove only from finished areas.

3.6 SHOP PRIMER REPAIR

Repair shop primer in accordance with the paint manufacturer's recommendation for surfaces damaged by handling, transporting, cutting, welding, or bolting.

3.6.1 Field Priming

Field priming of steel exposed to the weather, or located in building areas without HVAC for control of relative humidity. After erection, the field bolt heads and nuts, field welds, and any abrasions in the shop coat shall be cleaned and primed with paint of the same quality as that used for the shop coat.

3.7 FIELD QUALITY CONTROL

Perform field tests, and provide labor, equipment, and incidentals required for testing. The Contracting Officer shall be notified in writing of defective welds, bolts, nuts, and washers within 7 working days of the date of weld inspection.

3.7.1 Welds

3.7.1.1 Visual Inspection

AWS D1.1. Furnish the services of AWS-certified welding inspectors for fabrication and erection inspection and testing and verification inspections. Welding inspectors shall visually inspect and mark welds, including fillet weld end returns.

-- End of Section --

SECTION TABLE OF CONTENTS

DIVISION 05 - METALS

SECTION 05160

RETROFIT ROOF FRAMING SYSTEM

10/97

PART 1 GENERAL

1.1 REFERENCES
1.2 GENERAL REQUIREMENTS
1.2.1 Configuration
1.2.2 Concrete Structural Roof
1.3 DESIGN REQUIREMENTS
1.3.1 Design Criteria
1.3.2 Dead Loads
1.3.3 Live Loads
1.3.4 Roof Snow Loads
1.3.5 Wind Loads
1.3.6 Thermal Loads
1.4 SUBMITTALS
1.5 DELIVERY, HANDLING AND STORAGE

PART 2 PRODUCTS

2.1 COLD-FORMED STEEL FRAMING
2.2 CONNECTIONS
2.2.1 Framing Screws, Bolts and Anchors
2.2.2 Bolts for Anchorage to Concrete Roof Structure
2.2.3 Welded Connections

PART 3 EXECUTION

3.1 GENERAL INSTALLATION REQUIREMENTS
3.2 BASE FRAMING AND ANCHORAGE
3.3 SUPERSTRUCTURE FRAMING

-- End of Section Table of Contents --

SECTION 05160

RETROFIT ROOF FRAMING SYSTEM
10/97

PART 1 GENERAL

1.1 REFERENCES

The publications listed below form a part of this specification to the extent referenced. The publications are referred to in the text by the basic designation only.

AMERICAN IRON AND STEEL INSTITUTE (AISI)

AISI SG-971-Spec	(1996) Specification & Commentary for the Design of Cold-Formed Steel Structural Members (Part V of the Cold-Formed Steel Design Manual)
AISI SG-2000-1	(2000, Suppelment No. 1 to the 1996 Specification) Specification for the Design of Cold Formed Steel Structural Members, With Commentary

AMERICAN SOCIETY FOR TESTING AND MATERIALS (ASTM)

ASTM A 123	(2001) Zinc (Hot-Dip Galvanized) Coatings on Iron and Steel Products
ASTM A 153	(2001) Zinc Coating (Hot-Dip) on Iron and Steel Hardware
ASTM A 653	(2002) Steel Sheet, Zinc-Coated (Galvanized) or Zinc-Iron Alloy-Coated (Galvanealed) by the Hot-Dip Process
ASTM A 924	(1999) General Requirements for Steel Sheet, Metalic-Coated by the Hot-Dip Process
ASTM C 955	(2001) Load-Bearing (Transverse and Axial) Steel Studs, Runners (Tracks), and Bracing or Bridging for Screw Application of Gypsum Board and Metal Plaster Bases

AMERICAN SOCIETY OF CIVIL ENGINEERS (ASCE)

ASCE 7	(1998) Minimum Design Loads for Buildings and Other Structures

AMERICAN WELDING SOCIETY (AWS)

AWS D1.3	(1998) Structural Welding Code - Sheet Steel

1.2 GENERAL REQUIREMENTS

The Contractor shall furnish a roof framing system for the Filter Building which is compatible in design, installation and performance with the Structural Standing Seam Metal Roof system, provided under Section 07416 STRUCTURAL STANDING SEAM METAL ROOF (SSSMR) SYSTEM, to be installed over the framing system. The roof framing system may be either a manufacturer's standard system, specifically developed to reframe existing roof structures, designed to satisfy all requirements contained herein, or an original design incorporating a manufacturer's standard cold-formed steel framing products to produce a framing system of the required configuration. The roof framing system shall include framing for roof fascias and soffits. The roof framing system shall include permanent bracing to provide stability to the entire retrofit roof structure and all individual members without relying upon any structural contribution from the SSSMR system.

1.2.1 Configuration

The roof framing system shall be configured to provide a finished roof of the indicated slopes and dimensions, and shall consist of base members, vertical struts, studs, bracing, continuous purlins and other members as necessary to provide support for the attached roofing and wall systems and transfer vertical and horizontal forces produced by the design loads to the concrete roof structure. The configuration and location of all members, bridging for members and bracing for the roof system shall be determined by the Contractor's design. Spacing of roof purlins and struts shall conform to the requirements of the SSSMR system and SECTION 07416 STRUCTURAL STANDING SEAM METAL ROOF (SSSMR) SYSTEM. Spacing of studs for fascia and soffit framing shall not exceed 16 inches.

1.2.2 Concrete Structural Roof

The retrofit roof framing system shall be designed to be supported by and anchored directly to the Filter Building concrete roof. Intervals of support and anchorage shall be such that the tributary roof area supported at each support point does not exceeding 25 square feet. The framing system shall not be supported on top of or anchored through insulation.

1.3 DESIGN REQUIREMENTS

Design of the roof framing system, including soffits and fascias, and anchorage of the system to the concrete roof structure, shall be the responsibility of the Contractor. The framing shall be designed as a complete system, with the structural design including all framing members, connections and bracing for the roof framing system, and all attachments to other elements. The roof framing system shall be coordinated with the requirements for mechanical and electrical service. The system shall be compatible will all roof penetrations and provide support for the mechanical penthouse.

1.3.1 Design Criteria

Design loadings shall be as specified herein, except where referenced to diagrams on the drawings, and shall be as determined in accordance with ASCE 7, where not otherwise indicated. Structural cold-formed steel framing members and their connections shall be designed in accordance with AISI SG-971-Spec and AISI SG-2000-1. Maximum deflection of roof purlins

under applied live, snow or wind loadings shall not exceed 1/180 of the span length. Design of welded connections shall be in accordance with AWS D1.3.

1.3.2 Dead Loads

The dead load shall include the weights of the roof framing system and the SSSMR system. The combined weight of the complete SSSMR system and retrofit roof framing system shall not exceed 10 psf.

1.3.3 Live Loads

The minimum design roof uniform live load shall be 20 psf.

1.3.4 Roof Snow Loads

The design roof snow load shall be 7 psf.

1.3.5 Wind Loads

The design wind uplift pressures for the retrofit roof system shall be the same as indicated on the drawings for the Standing Seam Metal Roof System.

1.3.6 Thermal Loads

The roof framing system shall be designed to accommodate thermal expansion and contraction forces resulting from a total temperature range of 140 degrees F during the life of the structure.

1.4 SUBMITTALS

Government approval is required for submittals with a "G" designation; submittals not having a "G" designation are for information only. When used, a designation following the "G" designation identifies the office that will review the submittal for the Government. The following shall be submitted in accordance with Section 01330 SUBMITTAL PROCEDURES:

SD-05 Design Data

Design Analysis; G-AE.

Design analysis signed by a Registered Professional Engineer. The design analysis shall include complete calculations and tabular data as necessary, demonstrating the structural performance of all cold-formed steel members, bracing and connections comprising the framing system and its anchorage to the concrete roof structure, for the design loadings and deflection criteria in accordance with the provisions of AISI SG-971-Spec and AISI SG-2000-1. Formulas and references shall be identified. Assumptions and conclusions shall be explained, and cross-referencing shall be clear. Computer programmed designs shall be accompanied by stress values and a letter of certification, signed by a Registered Professional Engineer, stating the design criteria and procedures used and attesting to the adequacy and accuracy of the design. A narrative of the computer program delineating the basic methodology shall be included in the submittal. The program output shall be annotated and supplemented with sketches so that an engineer unfamiliar with the program can verify the input and output. Critical load conditions used in the final sizing of the members shall be emphasized. The design analysis shall include the name and office phone number of the designer and checker who function as a point of contact to

answer questions during the detail-drawing review.

SD-02 Shop Drawings

Retrofit Roof Framing System; G-AE.

Erection plan and details of cold-formed steel framing, including framing connections, bracing details, bridging, and attachment to the structure. Drawings shall indicate thickness, material grade, dimensions, protective coatings, and section properties of all cold-formed steel framing members used in roof framing. Drawings shall also indicate size and type of all fasteners and welds.

SD-07 Certificates

Welders Qualification.

Certified copies of welder qualifications test records showing qualification in accordance with AWS D1.3.

1.5 DELIVERY, HANDLING AND STORAGE

Materials shall be delivered and handled in a manner to avoid damage and shall be stored out of contact with the ground, in such manner and location as will minimize deterioration. Finish of the framing members shall be maintained at all times, using an approved high zinc dust content galvanizing repair paint whenever necessary to prevent the formation of rust.

PART 2 PRODUCTS

2.1 COLD-FORMED STEEL FRAMING

Retrofit roof framing system members, including angles, channels, zee-sections, studs, horizontal bridging, and other members as required, shall be formed from cold-formed steel. All cold-formed steel framing members, components, and accessories shall conform to ASTM C 955 and be of steel conforming to ASTM A 653, Grade A, having a minimum yield strength of 33,000 psi. Section properties shall be determined in accordance with AISI SG-971-Spec and AISI SG-2000-1. All members and components shall be hot-dip galvanized in accordance with ASTM A 924 with a minimum coating thickness of G 60. Framing covered herein shall be used only in framing the retrofit roof framing system (Including framing for fascias and soffits). Metal framing for interior partitions are specified in Section 09250A GYPSUM WALLBOARD.

2.2 CONNECTIONS

Screws, bolts and anchors shall be hot-dip galvanized in accordance with ASTM A 123 or ASTM A 153 as appropriate.

2.2.1 Framing Screws, Bolts and Anchors

Screws, bolts and anchors used in the assembly of the cold-formed steel framing system shall be as required by design of the framing system for the specified loading. Screw, bolt and anchor sizes shall be shown on the detail drawings.

2.2.2 Bolts for Anchorage to Concrete Roof Structure

Expansion anchors or other bolts used for attachment of the roof framing system to the concrete roof shall be as required by design to provide the necessary force transfer and wind uplift resistance capacity. Bolts shall be shown on the detail drawings.

2.2.3 Welded Connections

All welded connections shall be designed in accordance with AWS D1.3, as modified by AISI SG-971-Spec and AISI SG-2000-1, and shall be shown on the detail or erection drawings. Welding electrodes shall be appropriate for the base metal of the members to be connected.

PART 3 EXECUTION

3.1 GENERAL INSTALLATION REQUIREMENTS

Erection of the retrofit roof framing and accessories shall be in accordance with the approved detail drawings. Damaged or deformed members and accessories shall not be installed.

3.2 BASE FRAMING AND ANCHORAGE

Points of support for the retrofit roof framing system shall be located as required by the system design, and shall be such that purlin spacings and tributary load areas are within the limiting parameters specified. Base members or base plates for struts and other load transferring members at points of support for the system shall bear directly upon the surface of the concrete roof slab. Base members or base plates shall be anchored by bolting into the concrete at all support points. Bolting shall be adequate to resist the design forces to be transferred to the roof structure, and shall be accomplished in a manner which will not damage the integrity of the concrete roof slab.

3.3 SUPERSTRUCTURE FRAMING

As erection progresses, the work shall be securely braced to resist wind and erection loads. Horizontal bridging for purlins and struts shall be provided as necessary. All field welding shall be performed in accordance with AWS D1.3, as modified by AISI SG-971-Spec and AISI SG-2000-1. All welders shall be qualified in accordance with AWS D1.3. Welds shall be cleaned and touched-up with zinc-rich paint. Immediately upon detection, damaged or abraded surfaces of framing members shall be touched up with zinc-rich paint.

-- End of Section --

SECTION TABLE OF CONTENTS

DIVISION 05 - METALS

SECTION 05210A

STEEL JOISTS

01/02

PART 1 GENERAL

1.1 REFERENCES
1.2 SUBMITTALS
1.3 GENERAL REQUIREMENTS
1.4 DELIVERY AND STORAGE

PART 2 PRODUCTS

2.1 OPEN WEB STEEL JOISTS
2.2 ACCESSORIES AND FITTINGS
2.3 SHOP PAINTING

PART 3 EXECUTION

3.1 ERECTION
3.2 BEARING PLATES

-- End of Section Table of Contents --

SECTION 05210A

STEEL JOISTS
01/02

PART 1 GENERAL

1.1 REFERENCES

The publications listed below form a part of this specification to the extent referenced. The publications are referred to in the text by basic designation only.

STEEL JOIST INSTITUTE (SJI)

SJI Specs & Tables	(1994) Standard Specifications Load Tables and Weight Tables for Steel Joists and Joist Girders

1.2 SUBMITTALS

Government approval is required for submittals with a "G" designation; submittals not having a "G" designation are for information only. When used, a designation following the "G" designation identifies the office that will review the submittal for the Government. The following shall be submitted in accordance with Section 01330 SUBMITTAL PROCEDURES:

SD-02 Shop Drawings

Steel Joists; G-AE

Detail drawings shall include fabrication and erection details, specifications for shop painting, and identification markings of joists.

SD-05 Design Data

Design Computations; G-AE

Design computations for "SP" joists shall be submitted as one package with the shop drawings.

SD-07 Certificates

Steel Joists; G-AE

Certificates stating that the steel joists have been designed and manufactured in accordance with SJI Specs & Tables. Complete engineering design computations may be submitted in lieu of the certification. Design computations are required for "SP" joists.

1.3 GENERAL REQUIREMENTS

Steel joists are designated on the drawings in accordance with the standard designations of the Steel Joist Institute. Joists of other standard designations or joists with properties other than those shown may be substituted for the joists designated provided the structural properties are equal to or greater than those of the joists shown and provided all other specified requirements are met.

1.4 DELIVERY AND STORAGE

Materials shall be delivered to the site in undamaged condition and stored off the ground in a well drained location, protected from damage, and easily accessible for inspection and handling.

PART 2 PRODUCTS

2.1 OPEN WEB STEEL JOISTS

Open web steel joists shall conform to SJI Specs & Tables, K-Series. Joists shall be designed to support the loads given in the standard load tables of SJI Specs & Tables. Joists designated with "SP" on the contract drawings shall be designed to support the loads given on the contract drawings. Joists shall be designed for the sloped roof configuration where shown, with sloped bearing seats.

2.2 ACCESSORIES AND FITTINGS

Accessories and fittings, including end supports and bridging, shall be in accordance with the standard specifications under which the members were designed.

2.3 SHOP PAINTING

Joists and accessories shall be shop painted with a rust-inhibiting primer paint. For joists which will be finish painted under Section 09900 PAINTS AND COATINGS, the primer paint shall be limited to a primer which is compatible with the specified finish paint.

PART 3 EXECUTION

3.1 ERECTION

Installation of joists shall be in accordance with the standard specification under which the member was produced. Joists shall be handled in a manner to avoid damage. Damaged joists shall be removed from the site, except when field repair is approved and such repairs are satisfactorily made in accordance with the manufacturer's recommendations. Joists shall be accurately set, and end anchorage shall be in accordance with the standard specification under which the joists were produced. For spans over 40 ft through 60 ft one row of bridging nearest midspan shall be bolted diagonal bridging; for spans over 60 ft bolted diagonal bridging shall be used instead of welded horizontal bridging. Joist bridging and anchoring shall be secured in place prior to the application of any construction loads. Any temporary loads shall be distributed so that the carrying capacity of any joist is not exceeded. Loads shall not be applied to bridging during construction or in the completed work. Abraded, corroded, and field welded areas shall be cleaned and touched up with the same type of paint used in the shop painting.

3.2 BEARING PLATES

Bearing plates shall be provided with bearing as indicated on the drawings.

-- End of Section --

SECTION TABLE OF CONTENTS

DIVISION 05 - METALS

SECTION 05300A

STEEL DECKING

01/02

PART 1 GENERAL

1.1 REFERENCES
1.2 SUBMITTALS
1.3 DELIVERY, STORAGE, AND HANDLING

PART 2 PRODUCTS

2.1 DECK UNITS
2.1.1 Roof Deck
2.2 TOUCH-UP PAINT
2.3 ADJUSTING PLATES
2.4 CLOSURE PLATES
2.4.1 Closure Plates for Roof Deck
2.5 ACCESSORIES

PART 3 EXECUTION

3.1 ERECTION
3.2 ATTACHMENTS
3.3 HOLES AND OPENINGS

-- End of Section Table of Contents --

SECTION 05300A

STEEL DECKING
01/02

PART 1 GENERAL

1.1 REFERENCES

The publications listed below form a part of this specification to the extent referenced. The publications are referred to in the text by basic designation only.

AMERICAN IRON AND STEEL INSTITUTE (AISI)

AISI Cold-Formed Mnl	(1996) Cold-Formed Steel Design Manual

AMERICAN SOCIETY FOR TESTING AND MATERIALS (ASTM)

ASTM A 611	(1997) Structural Steel (SS), Sheet, Carbon, Cold-Rolled
ASTM A 780	(2000) Repair of Damaged and Uncoated Areas of Hot-Dipped Galvanized Coatings

AMERICAN WELDING SOCIETY (AWS)

AWS D1.3	(1998) Structural Welding Code - Sheet Steel

STEEL DECK INSTITUTE (SDI)

SDI Diaphragm Mnl	(1991) Diaphragm Design Manual
SDI Pub No. 29	(1995) Design Manual for Composite Decks, Form Decks, Roof Decks, and Cellular Metal Floor Deck with Electrical Distribution

THE SOCIETY FOR PROTECTIVE COATINGS (SSPC)

SSPC Paint 20	(1991) Zinc-Rich Primers (Type I - "Inorganic" and Type II - "Organic")

1.2 SUBMITTALS

Government approval is required for submittals with a "G" designation; submittals not having a "G" designation are for information only. When used, a designation following the "G" designation identifies the office that will review the submittal for the Government. The following shall be submitted in accordance with Section 01330 SUBMITTAL PROCEDURES:

SD-02 Shop Drawings

Deck Units; G-AE
Accessories; G-AE
Attachments; G-AE
Holes and Openings; G-AE

Drawings shall include type, configuration, structural properties, location, and necessary details of deck units, accessories, and

supporting members; size and location of holes to be cut and reinforcement to be provided; location and sequence of welded or fastener connections; and the manufacturer's erection instructions.

SD-03 Product Data

Deck Units; G-AE

Design computations for the structural properties of the deck units or SDI certification that the units are designed in accordance with SDI specifications.

Attachments; G-RE

Prior to welding operations, copies of qualified procedures and lists of names and identification symbols of qualified welders and welding operators.

SD-04 Samples

Deck Units
Accessories

A 2 sq. ft. sample of the decking material to be used, along with a sample of each of the accessories used.

SD-07 Certificates

Deck Units
Attachments

Manufacturer's certificates attesting that the decking material meets the specified requirements.

1.3 DELIVERY, STORAGE, AND HANDLING

Deck units shall be delivered to the site in a dry and undamaged condition, stored off the ground with one end elevated, and stored under a weathertight covering permitting good air circulation. Finish of deck units shall be maintained at all times by using touch-up paint whenever necessary to prevent the formation of rust.

PART 2 PRODUCTS

2.1 DECK UNITS

Deck units shall conform to SDI Pub No. 29. Panels of maximum possible lengths shall be used to minimize end laps. Deck units shall be fabricated in lengths to span 3 or more supports with flush, telescoped, or nested 2 inchlaps at ends, and interlocking, or nested side laps, unless otherwise indicated. Deck with cross-sectional configuration differing from the units indicated may be used, provided that the properties of the proposed units, determined in accordance with AISI Cold-Formed Mnl, are equal to or greater than the properties of the units indicated and that the material will fit the space provided without requiring revisions to adjacent materials or systems.

2.1.1 Roof Deck

Steel deck used in conjunction with insulation and built-up roofing shall conform to ASTM A 611. Roof deck units shall be fabricated of the steel design thickness required by the design drawings and shall be shop painted.

2.2 TOUCH-UP PAINT

Touch-up paint for shop-painted units shall be of the same type used for the shop painting. Welds shall be touched-up with paint conforming to SSPC Paint 20 in accordance with ASTM A 780. Finish of deck units and accessories shall be maintained by using touch-up paint whenever necessary to prevent the formation of rust.

2.3 ADJUSTING PLATES

Adjusting plates or segments of deck units shall be provided in locations too narrow to accommodate full-size units. As far as practical, the plates shall be the same thickness and configuration as the deck units.

2.4 CLOSURE PLATES

2.4.1 Closure Plates for Roof Deck

Voids above interior walls shall be closed with sheet metal where shown. Open deck cells at parapets, end walls, eaves, and openings through roofs shall be closed with sheet metal. Sheet metal shall be same thickness as deck units.

2.5 ACCESSORIES

The manufacturer's standard accessories shall be furnished as necessary to complete the deck installation. Metal accessories shall be of the same material as the deck and have minimum design thickness as follows: saddles, 0.0474 inch; welding washers, 0.0598 inch; cant strip, 0.0295 inch; other metal accessories, 0.0358 inch; unless otherwise indicated. Accessories shall include but not be limited to saddles, welding washers, cant strips, butt cover plates, underlapping sleeves, and ridge and valley plates.

PART 3 EXECUTION

3.1 ERECTION

Erection of deck and accessories shall be in accordance with SDI Pub No. 29, SDI Diaphragm Mnl and the approved detail drawings. Damaged deck and accessories including material which is permanently stained or contaminated, with burned holes or deformed shall not be installed. The deck units shall be placed on secure supports, properly adjusted, and aligned at right angles to supports before being permanently secured in place. The deck shall not be used for storage or as a working platform until the units have been secured in position. Loads shall be distributed by appropriate means to prevent damage during construction and to the completed assembly. The maximum uniform distributed storage load shall not exceed the design live load. There shall be no loads suspended directly from the steel deck.

3.2 ATTACHMENTS

All fasteners shall be installed in accordance with the manufacturer's recommended procedure, except as otherwise specified. The deck units shall be welded with nominal 5/8 inch diameter puddle welds to supports as indicated on the design drawings and in accordance with requirements of SDI Pub No. 29. All welding of steel deck shall be in accordance with AWS D1.3 using methods and electrodes as recommended by the manufacturer of the steel deck being used. Welds shall be made only by operators previously qualified by tests prescribed in AWS D1.3 to perform the type of work required. Welding washers shall not be used at the connections of the deck to supports. Welding washers shall not be used at sidelaps. Holes and similar defects will not be acceptable. Deck ends shall be lapped 2 inches. All partial or segments of deck units shall be attached to structural supports in accordance with Section 2.5 of SDI Diaphragm Mnl.

3.3 HOLES AND OPENINGS

All holes and openings required shall be coordinated with the drawings, specifications, and other trades. Holes and openings shall be drilled or cut, reinforced and framed as indicated on the drawings or described in the specifications and as required for rigidity and load capacity. Holes and openings less than 6 inches across require no reinforcement. Holes and openings 6 to 12 inches across shall be reinforced by 0.0474 inch thick steel sheet at least 12 inches wider and longer than the opening and be fastened to the steel deck at each corner of the sheet and at a maximum of 6 inches on center. Holes and openings larger than 12 inches shall be reinforced by steel angles installed perpendicular to the steel joists and supported by the adjacent steel joists. Steel angles shall be installed perpendicular to the deck ribs and shall be fastened to the angles perpendicular to the steel joists.

-- End of Section --

SECTION TABLE OF CONTENTS

DIVISION 05 - METALS

SECTION 05500A

MISCELLANEOUS METAL

04/01

PART 1 GENERAL

1.1 REFERENCES
1.2 SUBMITTALS
1.3 GENERAL REQUIREMENTS
1.4 DISSIMILAR MATERIALS
1.5 WORKMANSHIP
1.6 ANCHORAGE
1.7 ALUMINUM FINISHES
1.8 SHOP PAINTING

PART 2 PRODUCTS

2.1 VENTS
2.2 PIPE GUARDS
2.3 FLOOR GRATINGS AND FRAMES
2.4 HANDRAILS
2.4.1 Steel Handrails, Including Carbon Steel Inserts
2.5 LADDERS
2.6 MISCELLANEOUS
2.6.1 Carbon Grade Steel
2.6.2 Structural Tubing
2.6.3 High-Strength Bolts
2.7 FIRE EXTINGUISHER CABINETS
2.8 ROOF SCUTTLES
2.9 STEEL STAIRS
2.10 SAFETY CHAINS
2.11 PICNIC SHELTER
2.11.1 DESIGN REQUIREMENTS
2.11.1.1 Foundations
2.11.1.2 Structural Members and Connections
2.11.1.3 Live Loads
2.11.1.4 Snow Loads
2.11.1.5 Wind Loads
2.11.2 STRUCTURAL FRAMING
2.11.3 Wood Decking
2.11.4 Fasteners

PART 3 EXECUTION

3.1 GENERAL INSTALLATION REQUIREMENTS
3.2 INSTALLATION OF VENTS
3.3 INSTALLATION OF PIPE GUARDS
3.4 ATTACHMENT OF HANDRAILS
3.4.1 Installation of Steel Handrails
3.5 PICNIC SHELTER

3.6 INSTALLATION OF FIRE EXTINGUISHER CABINETS
3.7 TOUCH-UP PAINT

-- End of Section Table of Contents --

SECTION 05500A

MISCELLANEOUS METAL
04/01

PART 1 GENERAL

1.1 REFERENCES

The publications listed below form a part of this specification to the extent referenced. The publications are referred to in the text by basic designation only.

ALUMINUM ASSOCIATION (AA)

AA DAF-45	(1997) Designation System for Aluminum Finishes

AMERICAN INSTITUTE OF STEEL CONSTRUCTION (AISC)

AISC ASD Manual	(1989) Manual of Steel Construction Allowable Stress Design
AISC S342L	(1993) Load and Resistance Factor Design Specification for Structural Steel Buildings

AMERICAN IRON AND STEEL INSTITUTE (AISI)

AISI Cold-Formed Mnl	(1996) Cold-Formed Steel Design Manual

AMERICAN NATIONAL STANDARDS INSTITUTE (ANSI)

ANSI A14.3	(1992) Ladders - Fixed - Safety Requirements

AMERICAN SOCIETY FOR TESTING AND MATERIALS (ASTM)

ASTM A 36/A 36M	(2001) Carbon Structural Steel
ASTM A 53/A 53M	(2001) Pipe, Steel, Black and Hot-Dipped, Zinc-Coated, Welded and Seamless
ASTM A 123/A 123M	(2000) Zinc (Hot-Dip Galvanized) Coatings on Iron and Steel Products
ASTM A 325	(2000) Structural Bolts, Steel, Heat Treated, 120/105 ksi Minimum Tensile Strength
ASTM A 467/A 467M	(1998) Machine and Coil Chain
ASTM A 500	(1999) Cold-Formed Welded and Seamless Carbon Steel Structural Tubing in Rounds and Shapes

ASTM A 563	(1997) Carbon and Alloy Steel Nuts
ASTM A 570	(1997) Structural Steel, Sheet and Strip, Carbon, Hot-Rolled
ASTM E 814	(2000) Fire Tests of Through-Penetration Fire Stops

AMERICAN SOCIETY OF CIVIL ENGINEERS (ASCE)

ASCE 7	(1998) Minimum Design Loads for Buildings and Other Structures

AMERICAN WELDING SOCIETY (AWS)

AWS D1.1	(2000) Structural Welding Code - Steel

U.S. GENERAL SERVICES ADMINISTRATION (GSA)

CID A-A-344	(Rev B) Lacquer, Clear Gloss, Exterior, Interior

NATIONAL ASSOCIATION OF ARCHITECTURAL METAL MANUFACTURERS (NAAMM)

NAAMM MBG 531	(1994) Metal Bar Grating Manual

NATIONAL FIRE PROTECTION ASSOCIATION (NFPA)

NFPA 10	(1998; Errata 10-98-1) Portable Fire Extinguishers
NFPA 211	(2000) Chimneys, Fireplaces, Vents and Solid Fuel-Burning Appliances

1.2 SUBMITTALS

Government approval is required for submittals with a "G" designation; submittals not having a "G" designation are for information only. When used, a designation following the "G" designation identifies the office that will review the submittal for the Government. The following shall be submitted in accordance with Section 01330 SUBMITTAL PROCEDURES:

SD-02 Shop Drawings

Miscellaneous Metal Items; G-AE

Detail drawings indicating material thickness, type, grade, and class; dimensions; and construction details. Drawings shall include catalog cuts, erection details, manufacturer's descriptive data and installation instructions, and templates. Detail drawings for the following items: Steel Bar Grating and Supports, Handrails, Ladders, Pipe Guards, Roof Scuttles, Steel Stairs, Access Doors and Miscellaneous Shapes
Picnic shelter including foundation drawings.

SD-03 Product Data

Design Analysis; G-AE

Design analysis (Picnic shelter and foundations including anchor bolt plans) as one package with the drawings. Structural calculations signed and sealed by a professional engineer.

SD-04 Samples

Miscellaneous Metal Items.

Samples of the following items: Samples shall be full size, taken from manufacturer's stock, and shall be complete as required for installation in the structure. Samples may be installed in the work, provided each sample is clearly identified and its location recorded.

1.3 GENERAL REQUIREMENTS

The Contractor shall verify all measurements and shall take all field measurements necessary before fabrication. Welding to or on structural steel shall be in accordance with AWS D1.1. Items specified to be galvanized, when practicable and not indicated otherwise, shall be hot-dip galvanized after fabrication. Galvanizing shall be in accordance with ASTM A 123/A 123M Exposed fastenings shall be compatible materials, shall generally match in color and finish, and shall harmonize with the material to which fastenings are applied. Materials and parts necessary to complete each item, even though such work is not definitely shown or specified, shall be included. Poor matching of holes for fasteners shall be cause for rejection. Fastenings shall be concealed where practicable. Thickness of metal and details of assembly and supports shall provide strength and stiffness. Joints exposed to the weather shall be formed to exclude water.

1.4 DISSIMILAR MATERIALS

Where dissimilar metals are in contact, or where aluminum is in contact with concrete, mortar, masonry, wet or pressure-treated wood, or absorptive materials subject to wetting, the surfaces shall be protected with a coat of bituminous paint or asphalt varnish.

1.5 WORKMANSHIP

Miscellaneous metalwork shall be well formed to shape and size, with sharp lines and angles and true curves. Drilling and punching shall produce clean true lines and surfaces. Welding shall be continuous along the entire area of contact except where tack welding is permitted. Exposed connections of work in place shall not be tack welded. Exposed welds shall be ground smooth. Exposed surfaces of work in place shall have a smooth finish, and unless otherwise approved, exposed riveting shall be flush. Where tight fits are required, joints shall be milled. Corner joints shall be coped or mitered, well formed, and in true alignment. Work shall be accurately set to established lines and elevations and securely fastened in place. Installation shall be in accordance with manufacturer's installation instructions and approved drawings, cuts, and details.

1.6 ANCHORAGE

Anchorage shall be provided where necessary for fastening miscellaneous metal items securely in place. Anchorage not otherwise specified or indicated shall include slotted inserts made to engage with the anchors, expansion shields, and power-driven fasteners when approved for concrete;

toggle bolts and through bolts for masonry; machine and carriage bolts for steel; and lag bolts and screws for wood.

1.7 ALUMINUM FINISHES

Unless otherwise specified, aluminum items shall have standard mill finish. The thickness of the coating shall be not less than that specified for protective and decorative type finishes for items used in interior locations or architectural Class I type finish for items used in exterior locations in AA DAF-45. Items to be anodized shall receive a polished satin finish. Aluminum surfaces to be in contact with plaster or concrete during construction shall be protected with a field coat conforming to CID A-A-344.

1.8 SHOP PAINTING

Surfaces of ferrous metal except galvanized surfaces, shall be cleaned and shop coated with the manufacturer's standard protective coating unless otherwise specified. Surfaces of items to be embedded in concrete shall not be painted. Items to be finish painted shall be prepared according to manufacturer's recommendations or as specified.

PART 2 PRODUCTS

2.1 VENTS

Vents shall be designed and constructed in accordance with NFPA 211.

2.2 PIPE GUARDS

Pipe guards shall be heavy duty steel pipe conforming to ASTM A 53/A 53M, Type E or S, weight STD, black finish.

2.3 FLOOR GRATINGS AND FRAMES

Carbon steel grating shall be fabricated in accordance with NAAMM MBG 531. Edges shall be banded. Banding at supports shall be with bars 1/4 inch less in height than bearing bars for grating sizes above 3/4 inch. Banding at penetrations and cut-outs shall be with full depth bars. Banding at cut-outs and penetrations shall be welded to every bearing bar. Banding bars shall be flush with the top of bearing grating. Grating shall be anchored to supports with removable saddle clips. Support frames and anchorage shall be as indicated. Floor gratings and frames shall be galvanized after fabrication.

2.4 HANDRAILS

Handrails shall be designed to resist a concentrated load of 200 pounds in any direction at any point of the top of the rail or 20 pounds per foot applied horizontally to top of the rail, whichever is more severe.

2.4.1 Steel Handrails, Including Carbon Steel Inserts

Steel handrails, shall be steel pipe conforming to ASTM A 53/A 53M. Steel railings shall be 1-1/2 inch nominal size. Railings shall be hot-dip galvanized. Pipe collars shall be hot-dip galvanized steel.

a. Joint posts, rail, and corners shall be fabricated by one of the following methods:

(1) Mitered and welded joints by fitting post to top rail and intermediate rail to post, mitering corners, groove welding joints, and grinding smooth. Railing splices shall be butted and reinforced by a tight fitting interior sleeve not less than 6 inches long.

(2) Railings may be bent at corners in lieu of jointing, provided bends are made in suitable jigs and the pipe is not crushed.

2.5 LADDERS

Ladders shall be galvanized steel, fixed rail type in accordance with ANSI A14.3. Rungs shall be 3/4-inch steel rods, fitted into punched holes in rails, welded, and ground smooth. All splices and connections shall have a smooth transition with original members without projections that are sharp or more extension than required for joint strength. Rails shall be fitted with brackets at the spacing indicated for anchorage to the structure.

2.6 MISCELLANEOUS

Miscellaneous plates and shapes for items that do not form a part of the structural steel framework, such as lintels, sill angles, miscellaneous mountings, and frames, shall be provided to complete the work.

2.6.1 Carbon Grade Steel

Carbon grade steel shall conform to ASTM A 36/A 36M

2.6.2 Structural Tubing

Structural tubing shall conform to ASTM A 500, Grade B.

2.6.3 High-Strength Bolts

High-strength bolts shall conform to ASTM A 325, unless otherwise indicated. Nuts and washers for high-strength bolts shall be as specified in ASTM A 325.

2.7 FIRE EXTINGUISHER CABINETS

Cabinets to be located in fire-rated walls shall be fire-rated type, fabricated in accordance with ASTM E 814, and shall be listed by an approved testing agency for 1- and 2-hour combustible and non-combustible wall systems. The testing agency's seal shall be affixed to each fire-rated cabinet. Cabinets shall be type suitable for 10 pound extinguishers. Box and trim shall be of heavy gage rolled steel. Door shall be a rigid frame with full length piano type hinge and double strength (DSA) glass panel. Door and panel shall have the manufacturer's standard white baked enamel finish inside and out. Each cabinet shall be supplied with an ten pound ABC type fire extinguisher.

2.8 ROOF SCUTTLES

Roof scuttles shall be of galvanized steel not less than 14 gauge, with 3 inch beaded flange welded and ground at corners. Scuttle shall be sized to provide minimum clear opening of as indicated on drawings. Cover and curb shall be insulated with 1 inch thick rigid insulation covered and protected

by galvanized steel liner not less than 26 gauge. Scuttle shall be completely assembled with heavy hinges, compression spring operators enclosed in telescopic tubes, positive snap latch with turn handles on inside and outside and neoprene draft seal. Fasteners shall be provided for padlocking on the inside. The cover shall be equipped with an automatic hold-open arm complete with handle to permit one hand release.

2.9 STEEL STAIRS

Steel stairs shall be complete with structural channel stringers, grating treads, landings, columns, handrails, and necessary bolts and other fastenings as indicated. Structural steel shall conform to ASTM A 36/A 36M. Stairs and accessories shall be galvanized. Gratings for treads and landings shall conform to NAAMM MBG 531. Grating shall be serrated. Grating treads shall have slip-resistant nosings. Grating shall be designed for a uniform load of 100 psf or a concentrated load of 300 pounds at mid-span. Maximum deflection under concentrated load shall be 1/4". Bearing bar sizes for stair treads shall conform to the recommendations of NAAMM MBG 531.

2.10 SAFETY CHAINS

Safety chains shall be galvanized welded steel, proof coil chain tested in accordance with ASTM A 467/A 467M, Class CS. Safety chains shall be straight link style, 3/16 inch diameter, minimum 12 links per foot and with bolt type snap hooks on each end. Eye bolts for attachment of chains shall be galvanized 3/8 inch bolt with 3/4 inch eye. Two chains shall be furnished for each guarded opening.

2.11 PICNIC SHELTER

Picnic shelter shall be model RAM 20-foot by 34-foot TG/SS as manufactured by Poligon, a Division of W.H. Porter, Inc., Holland, Michigan or approved equal. Picnic shelter shall be assembled and installed by a manufacturer approved installer.

2.11.1 DESIGN REQUIREMENTS

Criteria and definitions shall be in accordance with AISC ASD Manual or AISC S342L and AISI Cold-Formed Mnl, as applicable. Loads and load combinations shall be in accordance with ASCE 7.

2.11.1.1 Foundations

Foundations shall be designed for an allowable soil bearing pressure of 3000 psf, a minimum bottom of footing depth of 2.5 feet below finish floor elevation, a factor of safety of 1.5 for overturning, sliding and uplift, and a concrete compressive strength as specified in Section 03300 CAST-IN-PLACE STRUCTURAL CONCRETE.

2.11.1.2 Structural Members and Connections

Structural steel members and their connections shall be designed in accordance with AISC ASD Manual or AISC S342L.

2.11.1.3 Live Loads

Uniform roof live loads, including maintenance traffic and construction

loads, of 20 psf, shall be determined and applied in accordance with ASCE 7.

2.11.1.4 Snow Loads

The design roof snow loads, including effects of drifting, shall be determined and applied in accordance with ASCE 7, using a ground snow load of 10 psf and a thermal factor of 1.2.

2.11.1.5 Wind Loads

Wind pressures shall be computed and applied in accordance with ASCE 7 using a basic wind speed of 100 mph (3 second gust) and exposure C. The minimum design uplift pressure shall be 15 psf.

2.11.2 STRUCTURAL FRAMING

Structural framing shall be steel tube shapes according to ASTM A 500 grade B or cold form box sections according to ASTM A 570 grade 55.

2.11.3 Wood Decking

Tongue and groove roof deck shall be 2x6 southern pine, kiln dried #2 grade or better, edges shave V'd one side. Fascia shall be cut from 2x6 southern pine.

2.11.4 Fasteners

Fasteners shall be high strength bolts in accordance with ASTM A 325 with high strength nuts in accordance with ASTM A 563. Anchor bolts shall conform to ASTM A 36/A 36M.

PART 3 EXECUTION

3.1 GENERAL INSTALLATION REQUIREMENTS

All items shall be installed at the locations shown and according to the manufacturer's recommendations. Items listed below require additional procedures as specified.

3.2 INSTALLATION OF VENTS

Vents shall be installed in accordance with NFPA 211. Roof housing and other accessories required for a complete installation shall be provided.

3.3 INSTALLATION OF PIPE GUARDS

Pipe guards shall be set vertically in concrete piers. Piers shall be constructed of, and the hollow cores of the pipe filled with, concrete specified in SECTION 03300 CAST-IN-PLACE STRUCTURAL CONCRETE.

3.4 ATTACHMENT OF HANDRAILS

Toeboards and brackets shall be installed where indicated. Splices, where required, shall be made at expansion joints. Removable sections shall be installed as indicated.

3.4.1 Installation of Steel Handrails

Installation shall be by means of base plates bolted to stringers or structural steel framework or bolting base plates to concrete with expansion anchors in concrete as indicated on the drawings.

3.5 PICNIC SHELTER

Installation shall be in accordance with manufacturer's installation instructions and approved shop drawings. Columns shall be attached to concrete foundations using a minimum of four anchor bolts per column. Foundations shall be constructed to all local codes.

3.6 INSTALLATION OF FIRE EXTINGUISHER CABINETS

Metal fire extinguisher cabinets shall be furnished and installed in accordance with NFPA 10 where shown on the drawings or specified.

3.7 TOUCH-UP PAINT

After installation, field bolt heads and nuts, field welds, and any abrasions in finishes shall be cleaned and primed with paint to the same quality as that used for shop coating. Touch-up paint for zinc-coated items shall be an approved galvanizing repair paint with a high zinc dust content.

-- End of Section --

SECTION TABLE OF CONTENTS

DIVISION 06 - WOODS & PLASTICS

SECTION 06100A

ROUGH CARPENTRY

04/01

PART 1 GENERAL

1.1 REFERENCES
1.2 SUBMITTALS
1.3 DELIVERY AND STORAGE

PART 2 PRODUCTS

2.1 LUMBER
2.1.1 Grading and Marking
2.1.1.1 Lumber Products
2.1.1.2 Plywood and Other Products
2.1.2 Sizes
2.1.3 Treatment
2.1.3.1 Lumber
2.1.3.2 Plywood
2.1.4 Moisture Content
2.1.5 Miscellaneous Wood Members
2.1.5.1 Nonstress Graded Members
2.1.5.2 Blocking
2.2 ACCESSORIES AND NAILS
2.2.1 Anchor Bolts
2.2.2 Bolts: Lag, Toggle, and Miscellaneous Bolts and Screws
2.2.3 Nails and Staples
2.3 INSULATION
2.3.1 Batt or Blanket
2.3.1.1 Glass Fiber Batts and Rolls
2.3.1.2 Mineral Fiber Batt
2.3.2 Rigid Insulation
2.3.2.1 Polystyrene Board
2.3.2.2 Polyurethane or Polyisocyanurate Board
2.4 VAPOR RETARDER

PART 3 EXECUTION

3.1 INSTALLATION OF FRAMING
3.1.1 General
3.2 INSTALLATION OF MISCELLANEOUS WOOD MEMBERS
3.2.1 Blocking
3.2.2 Nailers and Nailing Strips
3.3 INSTALLATION OF INSULATION
3.4 INSTALLATION OF VAPOR RETARDER

-- End of Section Table of Contents --

SECTION 06100A

ROUGH CARPENTRY
04/01

PART 1 GENERAL

1.1 REFERENCES

The publications listed below form a part of this specification to the extent referenced. The publications are referred to in the text by basic designation only.

AMERICAN FOREST & PAPER ASSOCIATION (AF&PA)

AF&PA T01	(1991; Supple 1993; Addenda Apr 1997; Supple T02) National Design Specification for Wood Construction
AF&PA T11	(1988) Manual for Wood Frame Construction

AMERICAN INSTITUTE OF TIMBER CONSTRUCTION (AITC)

AITC 111	(1979) Recommended Practice for Protection of Structural Glued Laminated Timber During Transit, Storage and Erection

AMERICAN SOCIETY FOR TESTING AND MATERIALS (ASTM)

ASTM A 307	(2000) Carbon Steel Bolts and Studs, 60 000 PSI Tensile Strength
ASTM C 518	(1998) Steady-State Heat Flux Measurements and Thermal Transmission Properties By Means of the Heat Flow Meter Apparatus
ASTM C 578	(1995) Rigid, Cellular Polystyrene Thermal Insulation
ASTM C 591	(1994) Unfaced Preformed Rigid Cellular Polyisocyanurate Thermal Insulation
ASTM C 665	(1998) Mineral-Fiber Blanket Thermal Insulation for Light Frame Construction and Manufactured Housing
ASTM C 1289	(1998) Faced Rigid Cellular Polyisocyanurate Thermal Insulation Board
ASTM E 96	(2000) Water Vapor Transmission of Materials
ASTM E 154	(1988; R 1999) Water Vapor Retarders Used in Contact with Earth Under Concrete Slabs, on Walls, or as Ground Cover
ASTM F 547	(1977; R 1995) Definitions of Terms Relating to Nails for Use with Wood and Wood-Base Materials

AMERICAN WOOD-PRESERVERS' ASSOCIATION (AWPA)

AWPA C2	(2000) Lumber, Timber, Bridge Ties and Mine Ties - Preservative Treatment by Pressure Processes
AWPA C9	(1997) Plywood - Preservative Treatment by Pressure Processes
AWPA M4	(1999) Standard for the Care of Preservative-Treated Wood Products
AWPA P5	(2000) Standards for Waterborne Preservatives

APA - THE ENGINEERED WOOD ASSOCIATION (APA)

APA EWS R540C	(1996) Builder Tips Proper Storage and Handling of Glulam Beams

FACTORY MUTUAL ENGINEERING AND RESEARCH (FM)

FM LPD 1-49	(1995) Loss Prevention Data Sheet - Perimeter Flashing

1.2 SUBMITTALS

Government approval is required for submittals with a "G" designation; submittals not having a "G" designation are for information only. When used, a designation following the "G" designation identifies the office that will review the submittal for the Government. The following shall be submitted in accordance with Section 01330 SUBMITTAL PROCEDURES:

SD-07 Certificates

Grading and Marking;

Manufacturer's certificates (approved by an American Lumber Standards approved agency) attesting that lumber and material not normally grade marked meet the specified requirements. Certificate of Inspection for grade marked material by an American Lumber Standards Committee (ALSC) recognized inspection agency prior to shipment.

Insulation;

Certificate attesting that the cellulose, perlite, glass and mineral fiber,glass mat gypsum roof board, polyurethane, or polyisocyanurate insulation furnished for the project contains recovered material, and showing an estimated percent of such recovered material.

1.3 DELIVERY AND STORAGE

Materials shall be delivered to the site in undamaged condition, stored off ground in fully covered, well ventilated areas, and protected from extreme changes in temperature and humidity. Laminated timber shall be handled and stored in accordance with AITC 111 or APA EWS R540C.

PART 2 PRODUCTS

2.1 LUMBER

2.1.1 Grading and Marking

2.1.1.1 Lumber Products

Solid sawn and finger-jointed lumber shall bear an authorized gradestamp or

grademark recognized by ALSC, or an ALSC recognized certification stamp, mark, or hammerbrand. Surfaces that are to be exposed to view shall not bear grademarks, stamps, or any type of identifying mark. Hammer marking will be permitted on timbers when all surfaces will be exposed to view.

2.1.1.2 Plywood and Other Products

Materials shall bear the grademark or other identifying marks indicating grades of material and rules or standards under which produced, including requirements for qualifications and authority of the inspection organization. Except for plywood and wood structural panels, bundle marking will be permitted in lieu of marking each individual piece. Surfaces that are to be exposed to view shall not bear grademarks or other types of identifying marks.

2.1.2 Sizes

Lumber and material sizes shall conform to requirements of the rules or standards under which produced. Unless otherwise specified, lumber shall be surfaced on four sides. Unless otherwise specified, sizes indicated are nominal sizes, and actual sizes shall be within manufacturing tolerances allowed by the standard under which the product is produced.

2.1.3 Treatment

Exposed areas of treated wood that are cut or drilled after treatment shall receive a field treatment in accordance with AWPA M4. Items of all-heart material of cedar, cypress, or redwood will not require preservative treatment, except when in direct contact with soil. Except as specified for all-heart material of the previously mentioned species, the following items shall be treated:

a. Wood members in contact with or within 18 inches of soil.

2.1.3.1 Lumber

Lumber shall be treated in accordance with AWPA C2 with waterborne preservatives listed in AWPA P5 to a retention level as follows:

a. 0.25 pcf intended for above ground use.

b. 0.40 pcf intended for ground contact .

2.1.3.2 Plywood

Plywood shall be treated in accordance with AWPA C9 with waterborne preservatives listed in AWPA P5 to a retention level as follows:

a. 0.25 pcf intended for above ground use.

2.1.4 Moisture Content

At the time lumber and other materials are delivered and when installed in the work their moisture content shall be as follows:

a. Treated and Untreated Lumber : 4 inches or less, nominal thickness, 19 percent maximum. 5 inches or more, nominal thickness, 23 percent maximum in a 3 inch perimeter of the timber cross-section.

b. Materials Other Than Lumber: In accordance with standard under which product is produced.

2.1.5 Miscellaneous Wood Members

2.1.5.1 Nonstress Graded Members

Members shall include bridging, corner bracing, furring, grounds, and nailing strips. Members shall be in accordance with TABLE I for the species used. Sizes shall be as follows unless otherwise shown:

Member	Size (inch)
Corner bracing	1 x 4.
Furring	1 x 2.

2.1.5.2 Blocking

Blocking shall be standard or number 2 grade.

2.2 ACCESSORIES AND NAILS

Markings shall identify both the strength grade and the manufacturer. Accessories and nails shall conform to the following:

2.2.1 Anchor Bolts

ASTM A 307, size as indicated, complete with nuts and washers.

2.2.2 Bolts: Lag, Toggle, and Miscellaneous Bolts and Screws

Type, size, and finish best suited for intended use. Finish options include zinc compounds, cadmium, and aluminum paint impregnated finishes.

2.2.3 Nails and Staples

ASTM F 547, size and type best suited for purpose; staples shall be as recommended by the manufacturer of the materials to be joined. For sheathing and subflooring, length of nails shall be sufficient to extend 1 inch into supports. In general, 8-penny or larger nails shall be used for nailing through 1 inch thick lumber and for toe nailing 2 inch thick lumber; 16-penny or larger nails shall be used for nailing through 2 inch thick lumber. Nails used with treated lumber and sheathing shall be galvanized. Nailing shall be in accordance with the recommended nailing schedule contained in AF&PA T11. Where detailed nailing requirements are not specified, nail size and spacing shall be sufficient to develop an adequate strength for the connection. The connection's strength shall be verified against the nail capacity tables in AF&PA T01. Reasonable judgement backed by experience shall ensure that the designed connection will not cause the wood to split. If a load situation exceeds a reasonable limit for nails, a specialized connector shall be used.

2.3 INSULATION

Thermal resistance of insulation shall be not less than the R-values shown. R-values shall be determined at 75 degrees F in accordance with ASTM C 518. Insulation shall conform to EPA requirements in conformance with Section 01670 RECYCLED / RECOVERED MATERIALS. Insulation shall be the standard product of a manufacturer and factory marked or identified with manufacturer's name or trademark and R-value. Identification shall be on individual pieces or individual packages. Materials containing more than one percent asbestos will not be allowed.

2.3.1 Batt or Blanket

2.3.1.1 Glass Fiber Batts and Rolls

Glass fiber batts and rolls shall conform to ASTM C 665, Type II kraft faced insulation Type III foil faced insulation, Class B, having a UL rating of 50. Insulation shall have a 10 mil thick, white, puncture resistant woven-glass cloth with vinyl facing on one side. Width and length shall suit construction conditions.

2.3.1.2 Mineral Fiber Batt

Mineral fiber batt shall conform to ASTM C 665, Type II kraft faced insulation, Class C Type III foil faced insulation Class C.

2.3.2 Rigid Insulation

2.3.2.1 Polystyrene Board

Polystyrene board shall be extruded and conform to ASTM C 578, Type IV.

2.3.2.2 Polyurethane or Polyisocyanurate Board

Polyurethane or polyisocyanurate board shall have a minimum recovered material content of 9 percent by weight of core material in the polyurethane or polyisocyanurate portion. Unfaced preformed polyurethane shall conform to ASTM C 591. Faced polyisocyanurate shall conform to ASTM C 1289.

2.4 VAPOR RETARDER

Vapor retarder shall be polyethylene sheeting conforming to ASTM E 154 or other equivalent material. Vapor retarder shall have a maximum vapor permeance rating of 0.5 perms as determined in accordance with ASTM E 96, unless otherwise specified.

PART 3 EXECUTION

3.1 INSTALLATION OF FRAMING

3.1.1 General

General framing shall be in accordance with AF&PA T11.Members shall be closely fitted, accurately set to required lines and levels, and rigidly secured in place. Members shall be cut, notched, or bored in accordance with applicable requirements of AF&PA T01 for the passage of pipes, wires, or conduits.

3.2 INSTALLATION OF MISCELLANEOUS WOOD MEMBERS

3.2.1 Blocking

Blocking shall be provided as necessary for application of wallboard, and other materials or building items, and to provide firestopping. Blocking for firestopping shall ensure a maximum dimension of 8 feet for any concealed space. Blocking shall be cut to fit between framing members and rigidly nailed thereto.

3.2.2 Nailers and Nailing Strips

Nailers and nailing strips shall be provided as necessary for the attachment of finish materials. Nailers used in conjunction with roof deck installation shall be installed flush with the roof deck system. Stacked nailers shall be assembled with spikes or nails spaced not more than 18 inches on center and staggered. Beginning and ending nails shall not be more than 6 inches for nailer end. Ends of stacked nailers shall be offset approximately 12 inches in long runs and alternated at corners. Anchors shall extend through the entire

thickness of the nailer. Strips shall be run in lengths as long as practicable, butt jointed, cut into wood framing members when necessary, and rigidly secured in place. Nailers and nailer installation for Factory Mutual wind uplift rated roof systems specified in other Sections of these specifications shall conform to the recommendations contained in FM LPD 1-49.

3.3 INSTALLATION OF INSULATION

Insulation shall be installed after construction has advanced to a point that the installed insulation will not be damaged by remaining work. For thermal insulation the actual installed thickness shall provide the R-values shown. For acoustical insulation the installed thickness shall be as shown. Insulation shall be installed on the weather side of such items as electrical boxes and water lines. Unless otherwise specified, installation shall be in accordance with the manufacturer's recommendation.

3.4 INSTALLATION OF VAPOR RETARDER

Vapor retarder shall be applied to provide a continuous barrier at window and door frames, and at all penetrations such as electrical outlets and switches, plumbing connections, and utility service penetrations. Joints in the vapor retarder shall be lapped and sealed according to the manufacturer's recommendations.

-- End of Section --

SECTION TABLE OF CONTENTS

DIVISION 06 - WOODS & PLASTICS

SECTION 06200A

FINISH CARPENTRY

04/01

PART 1 GENERAL

1.1 REFERENCES
1.2 SUBMITTALS
1.3 DELIVERY AND STORAGE

PART 2 PRODUCTS

2.1 WOOD ITEMS
2.1.1 Grading and Marking
2.1.2 Sizes and Patterns
2.1.3 Moisture Content
2.1.4 Interior trim
2.1.5 Woodwork Items
2.1.5.1 Bulletin Boards
2.1.5.2 Wood Benches
2.1.5.3 Solid Surfacing Material Window stools
2.2 NAILS

PART 3 EXECUTION

3.1 INTERIOR TRIM
3.2 WOODWORK ITEMS
3.2.1 Bulletin Boards

-- End of Section Table of Contents --

SECTION 06200A

FINISH CARPENTRY
04/01

PART 1 GENERAL

1.1 REFERENCES

The publications listed below form a part of this specification to the extent referenced. The publications are referred to in the text by basic designation only.

AMERICAN SOCIETY FOR TESTING AND MATERIALS (ASTM)

ASTM F 547 (1977; R 1995) Definitions of Terms Relating to Nails for Use with Wood and Wood-Base Materials

1.2 SUBMITTALS

Government approval is required for submittals with a "G" designation; submittals not having a "G" designation are for information only. When used, a designation following the "G" designation identifies the office that will review the submittal for the Government. The following shall be submitted in accordance with Section 01330 SUBMITTAL PROCEDURES:

SD-02 Shop Drawings

Finish Carpentry; G-RE

Drawings showing fabricated items and special mill and woodwork items. Drawings shall indicate materials and details of construction, methods of fastening, erection, and installation.

Wood Items; G-RE

Manufacturer's printed data indicating the usage of engineered or recycled wood products, and environmentally safe preservatives.

SD-04 Samples

Samples; G-AE

Samples shall be of sufficient size to show patterns, color ranges, and types, as applicable, of the material proposed to be used.

1.3 DELIVERY AND STORAGE

Materials shall be delivered to the site in undamaged condition, stored off ground in fully covered, well-ventilated areas, and protected from extreme changes in temperature and humidity.

PART 2 PRODUCTS

2.1 WOOD ITEMS

2.1.1 Grading and Marking

Materials shall bear the grademark, stamp or other identifying marks indicating grades of material and rules or standards under which produced. Such identifying marks on a material shall be in accordance with the rule or standard under which the material is produced, including requirements for qualifications and authority of the inspection organization, usage of authorized identification, and information included in the identification. The inspection agency for lumber shall be certified by the Board of Review, American Lumber Standards Committee, to grade the species used. Surfaces that are to be architecturally exposed to view shall not bear grademarks, stamps, or other types of identifying marks.

2.1.2 Sizes and Patterns

Lumber sizes and patterns shall conform to rules or standards under which produced. Unless otherwise specified, lumber shall be surfaced on four sides. Sizes and patterns for materials other than lumber shall conform to requirements of the rules or standards under which produced. Size references, unless otherwise specified, are nominal sizes, and actual sizes shall be within manufacturing tolerances allowed by the standard under which the product is produced.

2.1.3 Moisture Content

The maximum moisture content of untreated trim and wood siding shall be 15 percent at the time of delivery to the jobsite and when installed. Moisture content of all other material shall be in accordance with the standard under which the product is produced.

2.1.4 Interior trim

Trim shall be of the pattern indicated and shall be of a grade compatible with the finish specified.

2.1.5 Woodwork Items

2.1.5.1 Bulletin Boards

Bulletin boards shall have a hardwood or aluminum frame, 1/4 inch thick plywood or hardboard back; and a 1/4 inch thick, dense, smooth faced corkboard face securely cemented to the back. Bulletin board door shall be constructed of hardwood frame with 1/4" tempered glass, hinge shall be full piano type along each side of the cabinet. Latching of doors shall be by magnetic type for each door leaf.

2.1.5.2 Wood Benches

Wood benches located in each locker and shower area shall be constructed of solid red oak lumber attached to a metal frame as detailed and dimensioned on the drawings.

2.1.5.3 Solid Surfacing Material Window stools

Window stools shall be constructed of solid surfacing material, 1/2-inch thick, color and pattern as specified in section 09915 COLOR SCHEDULE. Stools construction shall include 1-inch radiused solid surfacing material edge as detailed on the drawings. Location and dimensions for solid surfacing material window stools shall be as noted on the drawings.

2.2 NAILS

Nails shall be the size and type best suited for the purpose and shall conform to ASTM F 547. Nails shall be hot-dip galvanized or aluminum when used on exterior work. For siding, length of nails shall be sufficient to extend 1-1/2 inches into supports, including wood sheathing over framing. Screws for use

where nailing is impractical shall be size best suited for purpose.

PART 3 EXECUTION

3.1 INTERIOR TRIM

Interior trim shall be installed straight, plumb, level and with closely fitted joints. Exposed surfaces shall be machine sanded at the mill. Molded work shall be coped at returns and interior angles and mitered at external corners. Intersections of flatwork shall be shouldered to ease any inherent changes in plane. Window and door trim shall be provided in single lengths. Blind nailing shall be used to the extent practicable, and face nailing shall be set and stopped with a nonstaining putty to match the finish applied. Screws shall be used for attachment to metal; setting and stopping of screws shall be of the same quality as required where nails are used.

3.2 WOODWORK ITEMS

3.2.1 Bulletin Boards

Items shall be installed in accordance with the manufacturer's recommendation.

-- End of Section --

SECTION TABLE OF CONTENTS

DIVISION 06 - WOODS & PLASTICS

SECTION 06410

CUSTOM CASEWORK

03/01

PART 1 GENERAL

1.1 SUMMARY (Not Applicable)
1.2 REFERENCES
1.3 DEFINITION
1.4 SUBMITTALS
1.5 QUALITY ASSURANCE
1.6 DELIVERY AND STORAGE
1.7 FIELD MEASURMENTS
1.8 SCHEDULEING AND COORDINATION

PART 2 PRODUCTS

2.1 WOOD MATERIALS
2.1.1 Casework
2.1.1.1 Lumber
2.1.1.2 Plywood
2.1.1.3 Veneer Plywood
2.1.1.4 Trim and Moldings
2.1.2 Countertops and Backsplashes
2.1.2.1 Plywood
2.2 SOLID SURFACING MATERIAL
2.3 LAMINATE
2.4 VINYL/ACRYLIC SHEETING
2.5 STAINLESS STEEL
2.6 RUBBER BASE
2.7 CABINET HARDWARE
2.8 FASTENERS
2.9 ACCESSORIES
2.9.1 Adhesives
2.9.1.1 Wood Joinery
2.9.1.2 Laminate Adhesive
2.10 FINISHES
2.11 FABRICATION
2.11.1 Cabinets
2.11.1.1 High Pressure Laminate and Vinyl/acrylic Sheets
2.11.1.2 Vinyl/Acrylic Corner Guards
2.11.2 Countertops & Backsplashes
2.11.2.1 Laminate Surfaces Countertops
2.11.2.2 Metal Surfaced Countertops
2.11.2.3 Solid Surfacing Material Countertops
2.11.3 Finishing
2.11.3.1 Filling
2.11.3.2 Sanding
2.11.3.3 Coatings

PART 3 EXECUTION

3.1 INSTALLATION
3.1.1 Countertops & Cabinets
3.1.2 Restroom Sink Vanity

-- End of Section Table of Contents --

SECTION 06410

CUSTOM CASEWORK
03/01

PART 1 GENERAL

1.1 SUMMARY (Not Applicable)

1.2 REFERENCES

The publications listed below form a part of this specification to the extent referenced. The publications are referred to within the text by the basic designation only.

AMERICAN SOCIETY FOR TESTING AND MATERIALS (ASTM)

ASTM A 167	(1991) Stainless and Heat-Resisting Chromium-Nickel Steel Plate, Sheet, and Strip

BUILDERS HARDWARE MANUFACTURERS ASSOICATION, INC. (BHMA)

ANSI/BHMA A 156.9	(1994) Cabinet Hardware (BHMA 201)

NATIONAL ELECTRICAL MANUFACTURER'S ASSOICATION (NEMA)

NEMA LD3	(1991) High Pressure Decorative Laminates

1.3 DEFINITION

The term "custom casework" as used herein includes the restroom vanities, wall-mounted telephone cubicles, and all built-in counters, vanities, cabinets, recessed display cabinets, and shelving as detailed and located on the drawings. Specifications include high pressure laminate surfacing and cabinet hardware. All exposed and semi-exposed surfaces not otherwise noted on the drawings or finish schedule shall be sanded smoothed and shall receive a clear finish or polyurethane. Wood finish may be shop finished or field applied in accordance with Section 09900: PAINTS AND COATINGS.

1.4 SUBMITTALS

Government approval is required for submittals with a "G" designation; submittals not having a "G" designation are for information only. When used, a designation following the "G" designation identifies the office that will review the submittal for the Government. The following shall be submitted in accordance with Section 01330 SUBMITTAL PROCEDURES:

SD-02 Shop Drawings

Prefabricated millwork.

Shop drawings shall show fabricated items and special mill and woodwork items. Shop drawings shall accurately indicate materials, details or construction, dimensions, methods of fastening and erection, and installation.

SD-04 Samples

Door Wood Finish; G-AE.

Submit three samples (8 inches by 10 inches) on specified wood species.

Plastic Laminates and Solid Surfacing Material; G-AE.

Three samples of all laminates and solid surfacing materials proposed.

Cabinet Hardware.

To include hinges, pulls, and drawer glides.

Vinyl/Acrylic Corner Guard.

A minimum of 6" long in color, texture and profile specified.

Vinyl/Acrylic Sheet Goods.

A minimum of 6 inches square in color and texture specified.

1.5 QUALITY ASSURANCE

Unit fabrication and materials shall be equal to AWI "premium" quality.

1.6 DELIVERY AND STORAGE

Casework may be delivered knock-downed or fully assembled. All units shall be delivered to the site in undamaged condition, stored off the ground in fully enclosed areas, and protected from damage. The storage area shall be well ventilated and not subject to extreme changes in temperature or humidity.

1.7 FIELD MEASURMENTS

Verify that field measurements are as indicated in the shop drawings before.

1.8 SCHEDULEING AND COORDINATION

Coordinate work the other trades. Units installed in open floor space and requiring electrical and communications wiring shall received these services from in-floor junction boxes. Junction box locations shall be coordinated with cabinet locations to be installed directly under the cabinet bases. Units shall not be installed in any room or space until painting, ceiling installation, and ceramic tile floorcovering installation are complete within the room where the units are located. Floor cabinets shall be installed before vinyl composition tile is installed.

PART 2 PRODUCTS

2.1 WOOD MATERIALS

2.1.1 Casework

2.1.1.1 Lumber

All 2 inch by 4 inch lumber framing shall be Grade III. Frame front shall be 3/4-inch by 1-1/2 inch hardwood.

2.1.1.2 Plywood

All plywood panels use for framing, doors, shelving, and countertops shall be 3/4-inch or 1/4-inch AWI Grade II as noted on the drawings. Drawer assembly except for the front shall be 1/4-inch AWI Grade II plywood.

2.1.1.3 Veneer Plywood

All veneered panels shall be 3/4-inch or 1/8-inch thickness as indicated on the drawings. Veneer shall be red oak, rift sawn, Grade B face. Grain direction shall be vertical on any surface exceeding one foot in height. Veneer shall be AWI Grade I. Finish shall be as indicated on the drawings and Section 09915 COLOR SCHEDULE.

2.1.1.4 Trim and Moldings

All exposed wood trim and moldings shall be formed from solid red oak. Shape, size, and finish shall be as noted in the drawings and finish schedule.

2.1.2 Countertops and Backsplashes

2.1.2.1 Plywood

All countertops and backsplashes, drawer fronts, cabinet doors, and framing panels construction of 3/4-inch plywood of a grade suitable for plastic laminate application.

2.2 SOLID SURFACING MATERIAL

Solid surfacing material shall be 1/2-inch in thickness for countertops and integral backsplashes in locations as noted on the drawings and finish schedule. Color and pattern shall be as specified in Section 09915, COLOR SCHEDULE.

2.3 LAMINATE

All laminates shall meet the requirements of NEMA LD3 for GP-20 general purpose grade high pressure decorative laminates. Design, colors, finish, and locations shall be as indicated on the drawings and on drawing sheet No. A-23, Interior Finish Materials Legend. PF42 plastic laminate shall be used for post-forming capability. Laminated cabinet interior surfaces shall utilize cabinet liner grade 726.

2.4 VINYL/ACRYLIC SHEETING

Fiber-backed vinyl/acrylic wallcovering sheets specified for cabinet sides and vertical stiles shall be .022-inches or .040-inches as noted on the drawings.

2.5 STAINLESS STEEL

Stainless steel used for countertops shall be 16-gauge with a brushed finish. Stainless steel used for shelving shall be 20-gauge with a brush finish. Stainless steel shall conform to ASTM A 167, type 304 (18-8) nickel-bearing.

2.6 RUBBER BASE

Rubber base used to cover recessed cabinet base surfaces shall be a 4 inch high, 1/8-inch thick coved profile as specified in Section 09650A, RESILIENT FLOORING and shown on the drawings.

2.7 CABINET HARDWARE

All hardware shall conform to ANSI/BHMA A 156.9 and shall consist of the following units:

a. Door Hinges: Concealed, self-closing (B01602).

b. Doorand Drawer Pulls: Back mounted pull 4 inch long, 3/8-inch diameter, solid nylon (or ABS plastic) pull, color: Black.

c. Drawer Slide: side mounted (B05051).

d. Adjustable Shelf Standards: Mortised (B04071), colors: brushed chrome and brushed dark bronze as noted on the drawings.

e. Shelf Rest: Closed version (B04081), colors: brushed chrome and brushed dark bronze as noted on the drawings.

f. Foot Rest/Supports: 1 5/16-inch diameter steel tubing with chrome-look finish.

2.8 FASTENERS

Nails, screws, and other suitable fasteners shall be the size and type best suited for the purpose.

2.9 ACCESSORIES

2.9.1 Adhesives

Adhesives shall be of a formula and type recommended by the manufacturer of material to be adhered and consistent with materials to be adhered to.

2.9.1.1 Wood Joinery

Adhesives used to bond wood members shall be a urea-formaldehyde resin formula.

2.9.1.2 Laminate Adhesive

Adhesive used to join high pressure decorative laminate to wood shall be a contact adhesive as recommended by the laminate manufacturer.

2.10 FINISHES

Finishes and their applications shall be as indicated in Section 09900: PAINTS AND COATINGS. Colors shall be in accordance with Section 09915 COLOR SCHEDULE.

2.11 FABRICATION

2.11.1 Cabinets

Cabinets construction shall be AWI "premium" grade, flush overlay as indicated on the drawings utilizing AWI Grade II plywood except as noted on the drawings. Cabinets shall be constructed with 3/4-inch solid hardwood frame fronts and 3/4-inch plywood sides and interior partitions unless otherwise noted. Backs shall be 1/4-inch plywood. Frame members shall be glued-together kiln-dried hardwood, mortised and tenoned, dovetailed or doweled, and nailed, stapled, or screwed. Top corners, bottom corners, and cabinet bottoms shall be braced with either hardwood blocks that are glued together with water-resistant glue and nailed in place, or metal or plastic corner braces. Door and drawer installation shall conform to flush overlay construction with face frame design as indicated on the drawings. Drawer construction shall be AWI "premium" grade. Corner guards, where specified, shall be installed with a manufacturer's recommended adhesive.

2.11.1.1 High Pressure Laminate and Vinyl/acrylic Sheets

All exposed cabinet surfaces shall be covered with high pressure decorative laminate or vinyl/acrylic sheeting with the exception of the exterior drawer surfaces, top of cabinet interior, exterior toe space, exterior cabinet back or as indicated on the drawings. Apply required grade of laminate and vinyl/acrylic sheets in full uninterrupted sheets consistent with manufactured sizes using one piece for full length only, using adhesives specified herein or as recommended by the manufacturer. Fit corners and joints hairline.

2.11.1.2 Vinyl/Acrylic Corner Guards

Surface mounted cabinet corner guards shall be applied to cabinets as indicated on the drawings. Corner guards shall be applied over vinyl/acrylic cabinet wall finish with an adhesive as recommended by the manufacturer. Double-faced tape or exposed fasteners shall not be used.

2.11.2 Countertops & Backsplashes

All countertop and backsplash construction shall be AWI "premium" grade. All backsplaces shall be 4-inches high.

2.11.2.1 Laminate Surfaces Countertops

Countertops shall be constructed of 3/4-inch plywood in thickness as indicated on the drawings. Countertops shall be constructed with one and one-halp inch diameter bullnose edge for postformed high pressure decorative laminate or black vinyl T-mold edge as indicated on the drawings. Apply laminate finish in full uninterrupted sheets consistent with manufactured sizes using one piece for full length only. Countertops shall be fully formed type, with shaped edges using wood nose molding at counter edge and coved wood molding or shaped wood block at juncture of countertop and backsplash. Edging and trim shall consist of plastic laminate cut and fitted to all exposed surfaces. End splashed of 3/4-inch plywood shall be supplied. Where sinks are specified, tops shall be constructed with opening to receive drop-in rimless vitreous china sink, stainless steel bowl sinks, and faucet sets specified in Section 15400: PLUMBING, GENERAL PURPOSE.

2.11.2.2 Metal Surfaced Countertops

Countertops shall be 1 1/2-inches thick, constructed of 3/4-inch plywood

with continuous stainless steel top and edges. Stainless steel tops shall consist of full uninterrupted sheets. Grind and finish all countertop corners and edges to eliminate sharp edges.

2.11.2.3 Solid Surfacing Material Countertops

Countertops shall be composed of 1/2-inch thick solid surfacing material with underlying wood structure as recommend by the solid surfacing material manufacturer. Integral, coved solid surfacing material backsplashes shall be included. Where sinks are specified, tops shall be constructed with openings to receive drop-in rimless vitreous china sink, stainless steel bowl sinks, and faucet sets specified in Section 15400: PLUMBING, GENERAL PURPOSE.

2.11.3 Finishing

2.11.3.1 Filling

All nails, screws, and other fasteners shall be countersunk and the holes filled with wood filler consistent in color with the wood species.

2.11.3.2 Sanding

Prepare all surfaces requiring coating by sanding with a grit and in the manner that scratches will not show in the final system.

2.11.3.3 Coatings

See the finish schedule, drawings and Section 09900: PAINTS AND COATINGS for types, method of application and location of casework finishes. All cabinet reveals shall be painted.

PART 3 EXECUTION

3.1 INSTALLATION

3.1.1 Countertops & Cabinets

Countertop and cabinet units shall be installed level, plumb, and true to line, in locations shown on the drawings. Units shall be attached securely to the floor and walls with anchoring devices that are appropriate for the wall and floor construction. Anchors shall be hidden from view. Comply with applicable requirements of AWI "premium" quality standards. Countertops, hardware, and accessories shall be installed as indicated. Prior to final acceptance, doors shall be aligned, hardware adjusted, and units left in clean and neat condition.

3.1.2 Restroom Sink Vanity

Verify adequacy of backing and wall support framing. Vanities shall be installed level, plumb, and true to line, in locations and at a height as shown on the drawings. The vanities shall be attached securely to the walls with anchoring devices and additional structural support that is appropriate for the wall construction and concealed from view. Inner edge of sink cut-outs for laminated plastic tops shall be painted with a coat of semigloss enamel paint before sink installation. Sink flanges shall be set in a bed of sealant. Provide sealant or caulking at the juncture of the wall and countertop backsplash, clear in color. Caulking bead shall be smooth and of minimum size required to function properly and provide a

smooth, finished appearance. Prior to final acceptance vanities shall be cleaned and left in neat condition.

-- End of Section --

SECTION TABLE OF CONTENTS

DIVISION 07 - THERMAL & MOISTURE PROTECTION

SECTION 07131A

ELASTOMERIC MEMBRANE WATERPROOFING

09/98

PART 1 GENERAL

1.1 REFERENCES
1.2 SUBMITTALS
1.3 DELIVERY, STORAGE, AND HANDLING

PART 2 PRODUCTS

2.1 MATERIALS
2.1.1 Performance Requirements
2.1.1.1 Butyl Rubber
2.1.2 Protection Board
2.2 ACCESSORIES

PART 3 EXECUTION

3.1 PREPARATION
3.2 APPLICATION
3.2.1 Butyl Rubber Installation
3.3 PROTECTION
3.3.1 Projections
3.3.2 Counterflashing
3.3.3 Expansion Joints and Fillets
3.3.4 Vertical Membrane Waterproofing

-- End of Section Table of Contents --

SECTION 07131A

ELASTOMERIC MEMBRANE WATERPROOFING
09/98

PART 1 GENERAL

1.1 REFERENCES

The publications listed below form a part of this specification to the extent referenced. The publications are referred to in the text by basic designation only.

AMERICAN SOCIETY FOR TESTING AND MATERIALS (ASTM)

ASTM D 297	(1993; R 1998) Rubber Products - Chemical Analysis
ASTM D 412	(1998a) Vulcanized Rubber and Thermoplastic Rubbers and Thermoplastic Elastomers - Tension
ASTM D 471	(1998e1) Rubber Property - Effect of Liquids
ASTM D 624	(1991; R 1998) Tear Strength of Conventional Vulcanized Rubber and Thermoplastic Elastomers
ASTM D 1171	(1999) Rubber Deterioration - Surface Ozone Cracking Outdoors or Chamber (Triangular Specimen)
ASTM E 96	(2000) Water Vapor Transmission of Materials
ASTM E 154	(1988; R 1999) Water Vapor Retarders Used in Contact with Earth Under Concrete Slabs, on Walls, or as Ground Cover
ASTM G 21	(1996) Determining Resistance of Synthetic Polymeric Materials to Fungi

1.2 SUBMITTALS

Government approval is required for submittals with a "G" designation; submittals not having a "G" designation are for information only. When used, a designation following the "G" designation identifies the office that will review the submittal for the Government. The following shall be submitted in accordance with Section 01330 SUBMITTAL PROCEDURES:

SD-02 Shop Drawings

Waterproofing; G-RE

Detail drawings showing size of sheets, position of sheets and splices, flashing and termination details, and expansion joint details.

SD-03 Product Data

Installation; G-RE

Manufacturer's instructions for installation of the elastomeric membrane, including procedures for preparing the membrane for use, flashing, and splicing. Instructions shall include recommended or required protective covering and procedures for safe handling and use of cleaners, adhesives, and sealants.

SD-07 Certificates

Materials; G-RE

Certificates of compliance attesting that the materials meet specification requirements. Certificates may show qualification of the identical compound in the specified test.

1.3 DELIVERY, STORAGE, AND HANDLING

Materials shall be delivered to the job site in unopened containers bearing the manufacturer's name, brand name, and description of contents. Membrane, flashing, and adhesives shall be stored in clean, dry areas. Storage temperature for adhesives shall be between 60 and 80 degrees F. Protection board shall be stored flat and off the ground.

PART 2 PRODUCTS

2.1 MATERIALS

Adhesives, mastics, cements, tapes, and primers shall be as recommended by the membrane manufacturer and shall be compatible with the material to which they are to be bonded.

2.1.1 Performance Requirements

All membranes shall meet the following requirements when tested by the referenced ASTM standards:

ASTM E 154 Puncture Resistance	40 pounds, (min.)
ASTM E 96, Procedure B Water Vapor Transmission at 80 degrees F Permeance	0.25 perms (max.)
ASTM G 21 or ASTM E 154 Resistance to Soil Bacteria or Fungi	No sustained growth or discoloration after 21 days

2.1.1.1 Butyl Rubber

Thickness, plus or minus 10 percent	60 mils
ASTM D 297 Specific Gravity	1.2 plus or minus 0.05
ASTM D 412 Tensile Strength	1200 psi (min.)
ASTM D 624 Elongation	300 percent (min.)
ASTM D 624 Tear Resistance	125 lb./inch (min.)

ASTM D 471 Water Absorption 168 hours @ 158 degrees F	plus 2 percent (max.)
ASTM D 1171 Ozone Resistance 50 pphm in air 100 hours @ 104 degrees F	20 percent

2.1.2 Protection Board

Protection board for waterproofing membrane shall be 1/2 inch minimum asphalt plank, 1 inch thick polystyrene foam insulationorpremolded bituminous protection board; 1/8 inch thick for vertical surfaces, and 1/4 inch thick for horizontal surfaces.

2.2 ACCESSORIES

Flashing, counterflashing, expansion joint covers and corner fillets shall be as recommended by the membrane manufacturer.

PART 3 EXECUTION

3.1 PREPARATION

Surfaces to which waterproofing is to be applied shall be clean, smooth, and free from deleterious materials and projections. Holes, honeycomb, cracks, or cavities shall be pointed or filled and finished flush with Portland cement mortar. Top surfaces of projecting masonry or concrete ledges below grade, except footings, shall be beveled. Before waterproofing is applied, the surfaces to be covered shall be swept to remove all dust and foreign matter. Concrete surfaces shall be cured 30 days prior to receiving elastomeric waterproofing and shall not be cured with compounds containing wax or oil.

3.2 APPLICATION

Waterproofing shall not be applied to wet surfaces. The ambient and surface temperatures shall be above 40 degrees F during application. Membrane under slabs shall be carried up abutting vertical surfaces to the level of finish of floor or to within 1/2 inch of the top edge of base where base is shown and cemented solid to the substrate. Membrane shall not be continuous through walls, floors, piers, and columns unless otherwise shown. Concrete surfaces shall be primed to receive the membrane. Membranes shall be handled and installed in accordance with the approved installation instructions. Primers, adhesives, and mastics shall be applied in accordance with the membrane manufacturer's printed instructions. Laps shall be oriented so that water will flow over the lap, and not into them. As soon as the mastic is fully set and dry, joints shall be checked. Where any openings or fishmouths appear, joints shall be resealed and rerolled. Wrinkles and buckles shall be avoided in applying membrane and joint reinforcement. Nonadhering membranes shall be unrolled and allowed to remain flat for at least 2 hours before application. Membranes shall be drawn tight during installation without stretching. Self-adhering membrane shall be installed by removing the release sheets on the back of the membrane and applying the tacky surface onto the primed surface. Laps and splices shall be sealed prior to completion of a day's work.

3.2.1 Butyl Rubber Installation

Each sheet shall be lapped at sides and ends a minimum of 6 inches over the preceding sheet. Lap and splice areas of membrane shall be cleaned with heptane, hexane, or white gasoline. Unvulcanized compounded butyl tape, 6 inch wide shall be applied between lapped splices so that the tape extends approximately 1/4 inch beyond the exposed sheeting edge. The tape shall be

rolled firmly into place as it is applied. Tape backing shall be removed and the lapped sheeting rolled or pressed into place. Splicing adhesive shall be applied to the lapped area 3-1/2 inches on either side of the lapped edge. The splice adhesive shall be allowed to dry thoroughly and the lap reinforced with 6 inch wide unvulcanized compounded butyl tape. Full contact shall be made for all lap areas. Corner splices and flashing overlaps shall be reinforced with a 12 inch wide strip of membrane over one layer of butyl tape or with a prefabricated corner of butyl rubber.

3.3 PROTECTION

Horizontal applications of membrane shall be protected from traffic during installation. No equipment shall be allowed directly on the membrane. Plywood, or similar material, overlayment shall be provided for wheel-ways. Walkways shall be provided where heavy traffic from other trades is expected. Materials shall not be stored on the membrane. A protective covering shall be installed over the membrane immediately after installation or testing. If membrane is to be exposed, a temporary covering shall be applied to protect the membrane until the protection board is installed.

3.3.1 Projections

Projections passing through membrane shall be flashed as recommended by the manufacturer of the waterproofing membrane.

3.3.2 Counterflashing

Waterproofing connecting with work exposed to the weather shall be counterflashed to form a watertight connection. Upper edge of membrane waterproofing and protective covering shall be counterflashed.

3.3.3 Expansion Joints and Fillets

Expansion joints and corner fillets shall be installed as recommended by the manufacturer of the waterproofing membrane.

3.3.4 Vertical Membrane Waterproofing

Waterproofing shall be protected with a 1/2 inch asphalt-impregnated fiberboard 1 inch polystyrene foam insulationor 1/8 inch compatible water-resistant (bitumen type) protection board. Edges of protection shall be butted, and exposed surfaces shall be covered by a coating of bitumen.

-- End of Section --

SECTION TABLE OF CONTENTS

DIVISION 07 - THERMAL & MOISTURE PROTECTION

SECTION 07416

STRUCTURAL STANDING SEAM METAL ROOF (SSSMR) SYSTEM

10/98 (Omaha Update 12/98)

PART 1 GENERAL

1.1 REFERENCES
1.2 GENERAL REQUIREMENTS
1.2.1 Structural Standing Seam Metal Roof (SSSMR) System
1.2.2 Manufacturer
1.2.3 Installer
1.3 DESIGN REQUIREMENTS
1.3.1 Design Criteria
1.3.2 Dead Loads
1.3.3 Live Loads
1.3.3.1 Concentrated Loads
1.3.3.2 Uniform Loads
1.3.4 Roof Snow Loads
1.3.5 Wind Loads
1.3.6 Thermal Loads
1.3.7 Framing Members Supporting the SSSMR System
1.3.8 Roof Panels Design
1.3.9 Accessories and Their Fasteners
1.4 PERFORMANCE REQUIREMENTS
1.5 SUBMITTALS
1.6 DELIVERY AND STORAGE
1.7 WARRANTIES
1.7.1 Contractor's Weathertightness Warranty
1.7.2 Manufacturer's Material Warranties.
1.8 COORDINATION MEETING

PART 2 PRODUCTS

2.1 ROOF PANELS
2.1.1 Steel Panels
2.1.2 Aluminum Panels
2.2 CONCEALED ANCHOR CLIPS
2.3 ACCESSORIES
2.4 FASTENERS
2.4.1 Screws
2.4.2 Bolts
2.4.3 Structural Blind Fasteners
2.5 SUBPURLINS
2.6 FACTORY COLOR FINISH
2.6.1 Salt Spray Test
2.6.2 Formability Test
2.6.3 Accelerated Weathering, Chalking Resistance and Color Change
2.6.4 Humidity Test
2.6.5 Impact Resistance
2.6.6 Abrasion Resistance Test
2.6.7 Specular Gloss
2.6.8 Pollution Resistance
2.7 INSULATION
2.7.1 Polyisocyanurate Rigid Board Insulation for Use Above a Roof Deck

2.7.2 Blanket Insulation
2.8 INSULATION RETAINERS
2.9 SEALANT
2.10 GASKETS AND INSULATING COMPOUNDS
2.11 VAPOR RETARDER
2.11.1 Vapor Retarders Separate from Insulation
2.11.2 Slip Sheet for Use With Vapor Retarder
2.12 EPDM RUBBER BOOTS
2.13 PREFABRICATED CURBS AND EQUIPMENT SUPPORTS

PART 3 EXECUTION

3.1 INSTALLATION
3.1.1 Field Forming of Panels for Unique Area
3.1.2 Subpurlins
3.1.3 Roof Panel Installation
3.1.4 Concealed Anchor Clips
3.2 INSULATION INSTALLATION
3.2.1 Board Insulation with Blanket Insulation
3.2.2 Blanket Insulation
3.3 PROTECTION OF VAPOR RETARDER FROM ROOF DECK
3.4 VAPOR RETARDER INSTALLATION
3.4.1 Polyethylene Vapor Retarder
3.5 SLIP SHEET INSTALLATION
3.6 CLEANING AND TOUCH-UP

-- End of Section Table of Contents --

SECTION 07416

STRUCTURAL STANDING SEAM METAL ROOF (SSSMR) SYSTEM
10/98 (Omaha Update 12/98)

PART 1 GENERAL

1.1 REFERENCES

The publications listed below form a part of this specification to the extent referenced. The publications are referred to in the text by basic designation only.

ALUMINUM ASSOCIATION (AA)

AA Alum Design Mnl	(1994) Aluminum Design Manual: Specification and Guidelines for Aluminum Structures

AMERICAN INSTITUTE OF STEEL CONSTRUCTION (AISC)

AISC ASD Spec	(1989) Specification for Structural Steel Buildings - Allowable Stress Design, Plastic Design

AMERICAN IRON AND STEEL INSTITUTE (AISI)

AISI Cold-Formed Mnl	(1996) Cold-Formed Steel Design Manual

AMERICAN SOCIETY FOR TESTING AND MATERIALS (ASTM)

ASTM A 463/A 463M	(1996a) Steel Sheet, Aluminum-Coated, by the Hot-Dip Process
ASTM A 653/A 653M	(2000) Steel Sheet, Zinc-Coated (Galvanized) or Zinc-Iron Alloy-Coated (Galvannealed) by the Hot-Dip Process
ASTM A 792/A 792M	(1999) Steel Sheet, 55% Aluminum-Zinc Alloy-Coated by the Hot-Dip Process
ASTM B 117	(1997) Operating Salt Spray (Fog) Testing Apparatus
ASTM B 209	(1996) Aluminum and Aluminum-Alloy Sheet and Plate
ASTM C 518	(1998) Steady-State Heat Flux Measurements and Thermal Transmission Properties by Means of the Heat Flow Meter Apparatus
ASTM C 991	(1992) Flexible Glass Fiber Insulation for Pre-Engineered Metal Buildings
ASTM C 1289	(1998) Faced Rigid Cellular Polyisocyanurate Thermal Insulation Board
ASTM D 522	(1993a) Mandrel Bend Test of Attached Organic Coatings

ASTM D 523	(1989; R 1994) Specular Gloss
ASTM D 714	(1987; R 1994) Evaluating Degree of Blistering of Paints
ASTM D 968	(1993) Abrasion Resistance of Organic Coatings by Falling Abrasive
ASTM D 1308	(1987; R 1998) Effect of Household Chemicals on Clear and Pigmented Organic Finishes
ASTM D 1654	(1992) Evaluation of Painted or Coated Specimens Subjected to Corrosive Environments
ASTM D 2244	(1993) Calculation of Color Differences from Instrumentally Measured Color Coordinates
ASTM D 2247	(1994) Testing Water Resistance of Coatings in 100% Relative Humidity
ASTM D 2794	(1993) Resistance of Organic Coatings to the Effects of Rapid Deformation (Impact)
ASTM D 3359	(1995a) Measuring Adhesion by Tape Test
ASTM D 4214	(1997) Evaluating Degree of Chalking of Exterior Paint Films
ASTM D 4397	(1996) Polyethylene Sheeting for Construction, Industrial, and Agricultural Applications
ASTM D 4587	(1991) Conducting Tests on Paint and Related Coatings and Materials Using a Fluorescent UV-Condensation Light- and Water-Exposure Apparatus
ASTM E 84	(2000a) Surface Burning Characteristics of Building Materials
ASTM E 1592	(1995) Structural Performance of Sheet Metal Roof and Siding Systems by Uniform Static Air Pressure Difference

AMERICAN SOCIETY OF CIVIL ENGINEERS (ASCE)

ASCE 7	(1998) Minimum Design Loads for Buildings and Other Structures

STEEL JOIST INSTITUTE (SJI)

SJI Specs & Tables	(1994) Standard Specifications Load Tables and Weight Tables for Steel Joists and Joist Girders

1.2 GENERAL REQUIREMENTS

The Contractor shall furnish a commercially available roofing system which satisfies all requirements contained herein and has been verified by load testing and independent design analyses to meet the specified design requirements.

1.2.1 Structural Standing Seam Metal Roof (SSSMR) System

The SSSMR system covered under this specification shall include the entire

roofing system; the standing seam metal roof panels, fasteners, connectors, roof securement components, and assemblies tested and approved in accordance with ASTM E 1592. In addition, the system shall consist of panel finishes, slip sheet, insulation, vapor retarder, all accessories, components, and trim and all connections with roof panels. This includes roof penetration items such as vents, curbs, skylights; interior or exterior gutters and downspouts; eaves, ridge, hip, valley, rake, gable, wall, or other roof system flashings installed and any other components specified within this contract to provide a weathertight roof system.

1.2.2 Manufacturer

The SSSMR system shall be the product of a manufacturer who has been in the practice of manufacturing and designing SSSMR systems for a period of not less than 3 years and has been involved in at least five projects similar in size and complexity to this project.

1.2.3 Installer

The installer shall be certified by the SSSMR system manufacturer to have experience in installing at least three projects that are of comparable size, scope and complexity as this project for the particular roof system furnished. The installer may be either employed by the manufacturer or be an independent installer.

1.3 DESIGN REQUIREMENTS

The design of the SSSMR system shall be provided by the Contractor as a complete system. Members and connections not indicated on the drawings shall be designed by the Contractor. Roof panels, components, transitions, accessories, and assemblies shall be supplied by the same roofing system manufacturer.

1.3.1 Design Criteria

Design criteria shall be in accordance with ASCE 7 unless otherwise specified.

1.3.2 Dead Loads

The dead load shall be the weight of the SSSMR system. Collateral loads such as sprinklers, mechanical and electrical systems, and ceilings shall not be attached to the panels.

1.3.3 Live Loads

1.3.3.1 Concentrated Loads

The panels and anchor clips shall be capable of supporting a 300 pound concentrated load. The concentrated load shall be applied at the panel midspan and will be resisted by a single standing seam metal roof panel assumed to be acting as a beam. The undeformed shape of the panel shall be used to determine the section properties.

1.3.3.2 Uniform Loads

The panels and concealed anchor clips shall be capable of supporting a minimum uniform live load of 20 psf.

1.3.4 Roof Snow Loads

The design roof snow loads shall be as shown on the contract drawings.

1.3.5 Wind Loads

The design wind uplift pressure for the roof system shall be as shown on the contract drawings. The design uplift force for each connection assembly shall be that pressure given for the area under consideration, multiplied by the tributary load area of the connection assembly. The safety factor listed below shall be applied to the design force and compared against the ultimate capacity. Prying shall be considered when figuring fastener design loads.

a. Single fastener in each connection.....3.0

b. Two or more fasteners in each connection...2.25

1.3.6 Thermal Loads

Roof panels shall be free to move in response to the expansion and contraction forces resulting from a total temperature range of 160 degrees F during the life of the structure.

1.3.7 Framing Members Supporting the SSSMR System

Any additions/revisions to framing members supporting the SSSMR system to accommodate the manufacturer/fabricator's design shall be the Contractor's responsibility and shall be submitted for review and approval. New or revised framing members and their connections shall be designed in accordance with AISC ASD Spec, AISI Cold-Formed Mnl, or SJI Specs & Tables as applicable. Maximum deflection under applied live load, snow, or wind load shall not exceed 1/180 of the span length.

1.3.8 Roof Panels Design

Steel panels shall be designed in accordance with AISI Cold-Formed Mnl. Aluminum panels shall be designed in accordance with AA Alum Design Mnl. The structural section properties used in the design of the panels shall be determined using the unloaded shape of the roof panels. The calculated panel deflection from concentrated loads shall not exceed 1/180 of the span length. The calculated panel deflection under applied live load, snow, or wind load shall not exceed 1/180 times the span length. Deflections shall be based on panels being continuous across three or more supports. Deflection shall be calculated and measured along the major ribs of the panels.

1.3.9 Accessories and Their Fasteners

Accessories and their fasteners shall be capable of resisting the specified design wind uplift forces and shall allow for thermal movement of the roof panel system. Exposed fasteners shall not restrict free movement of the roof panel system resulting from thermal forces. There shall be a minimum of two fasteners per clip. Single fasteners with a minimum diameter of 3/8 inch will be allowed when the supporting structural members are prepunched or predrilled.

1.4 PERFORMANCE REQUIREMENTS

The SSSMR shall be tested for wind uplift resistance in accordance with ASTM E 1592; SSSMR systems previously tested and approved by the Corps of Engineers' STANDARD TEST METHOD FOR STRUCTURAL PERFORMANCE OF SSMRS BY UNIFORM STATIC AIR PRESSURE DIFFERENCE may be acceptable. Two tests shall be performed. Test 1 shall simulate the edge condition with one end having crosswise restraint and other end free of crosswise restraint. The maximum span length for the edge condition shall be 30 inches. Test 2 shall simulate the interior condition with both ends free of crosswise restraint. The maximum span length for the interior condition shall be 5.0 feet. External reinforcement, such as clamps on the ribs, shall notbe installed to improve uplift resistance. Bolts through seams shall not be installed.

1.5 SUBMITTALS

Government approval is required for submittals with a "G" designation; submittals not having a "G" designation are for information only. When used, a designation following the "G" designation identifies the office that will review the submittal for the Government. The following shall be submitted in accordance with Section 01330 SUBMITTAL PROCEDURES:

SD-02 Shop Drawings

Structural Standing Seam Metal Roof System; G-AE.

Metal roofing drawings and specifications and erection drawings; shop coating and finishing specifications; and other data as necessary to clearly describe design, materials, sizes, layouts, standing seam configuration, construction details, provisions for thermal movement, line of panel fixity, fastener sizes and spacings, sealants and erection procedures. Drawings shall reflect the intent of the architectural detailing using the manufacturer's proprietary products and fabricated items as required. The SSSMR system shop drawings shall be provided by the metal roofing manufacturer.

SD-03 Product Data

Design Analysis; G-AE.

Design analysis signed by a Registered Professional Engineer employed by the SSSMR manufacturer. The design analysis shall include a list of the design loads, and complete calculations for the support system (when provided by the Contractor), roofing system and its components; valley designs, gutter/downspout calculations, screw pullout test results, and shall indicate how expected thermal movements are accommodated.

SD-04 Samples

Accessories; G-AE.

One sample of each type of flashing, trim, closure, thermal spacer block, cap and similar items. Size shall be sufficient to show construction and configuration.

Roof Panels; G-AE.

One piece of each type to be used, 9 inches long, full width.

Factory Color Finish; G-AE.

Three 3 by 5 inches samples of each type and color.

Fasteners; G-AE.

Two samples of each type to be used, with statement regarding intended use. If so requested, random samples of bolts, nuts, and washers as delivered to the job site shall be taken in the presence of the Contracting Officer and provided to the Contracting Officer for testing to establish compliance with specified requirements.

Insulation; G-AE.

One piece, 12 by 12 inches, of each type and thickness to be used, with a label indicating the rated permeance (if faced) and R-values. The flame spread, and smoke developed rating shall be shown on the label or provided in a letter of certification.

Gaskets and Insulating Compounds; G-AE.

Two samples of each type to be used and descriptive data.

Sealant; G-AE.

One sample, approximately 1 pound, and descriptive data.

Concealed Anchor Clips; G-AE.

Two samples of each type used.

Subpurlins; G-AE.

One piece, 9 inches long.

EPDM Rubber Boots; G-AE.

One piece of each type.

SD-06 Test Reports

Test Report for Uplift Resistance of the SSSMR; G-AE.

The report shall include the following information:

a. Details of the SSSMR system showing the roof panel cross-section with dimensions and thickness.

b. Details of the anchor clip, dimensions, and thickness.

c. Type of fasteners, size, and the number required for each connection.

d. Purlins/subpurlins size and spacing used in the test.

e. Description of the seaming operation including equipment used.

f. Maximum allowable uplift pressures. These pressures are determined from the ultimate load divided by a factor of safety equal to 1.65.

g. Any additional information required to identify the SSSMR system tested.

h. Signature and seal of an independent registered engineer who witnessed the test.

SD-07 Certificates

Qualifications; .

Qualifications of the manufacturer and installer.

Structural Standing Seam Metal Roof System; G-AE.

a. Certification that the actual thickness of uncoated sheets used in SSSMRS components including roofing panels, subpurlins, and concealed anchor clips complies with specified requirements.

b. Certification that materials used in the installation are mill certified.

c. Previous certification of SSSMR system tested under the Corps of Engineers' Standard Test Method in lieu of ASTM E 1592 testing.

d. Certification that the sheets to be furnished are produced under a

continuing quality control program and that a representative sample consisting of not less than three pieces has been tested and has met the quality standards specified for factory color finish.

e. Certification of installer. Installer certification shall be furnished.

f. Warranty certificate. At the completion of the project the Contractor shall furnish signed copies of the 5-year Warranty for Structural Standing Seam Metal Roof (SSSMR) System, a sample copy of which is attached to this section, the 20-year Manufacturer's Material Warranties, .

Insulation; .

Certificate attesting that the polyurethane or polyisocyanurate insulation furnished for the project contains recovered material, and showing an estimated percent of such recovered material.

1.6 DELIVERY AND STORAGE

Materials shall be delivered to the site in a dry and undamaged condition and stored out of contact with the ground. Materials shall be covered with weathertight coverings and kept dry. Storage conditions shall provide good air circulation and protection from surface staining.

1.7 WARRANTIES

The SSSMR system shall be warranted as outlined below. Any emergency temporary repairs conducted by the owner shall not negate the warranties.

1.7.1 Contractor's Weathertightness Warranty

The SSSMR system shall be warranted by the Contractor on a no penal sum basis for a period of five years against material and workmanship deficiencies; system deterioration caused by exposure to the elements and/or inadequate resistance to specified service design loads, water leaks, and wind uplift damage. The SSSMR system covered under this warranty shall include the entire roofing system including, but not limited to, the standing seam metal roof panels, fasteners, connectors, roof securement components, and assemblies tested and approved in accordance with ASTM E 1592. In addition, the system shall consist of panel finishes, slip sheet, insulation, vapor retarder, all accessories, components, and trim and all connections with roof panels. This includes roof penetration items such as vents, curbs, and skylights; interior or exterior gutters and downspouts; eaves, ridge, hip, valley, rake, gable, wall, or other roof system flashings installed and any other components specified within this contract to provide a weathertight roof system; and items specified in other sections of these specifications that are part of the SSSMR system. All material and workmanship deficiencies, system deterioration caused by exposure to the elements and/or inadequate resistance to specified design loads, water leaks and wind uplift damage shall be repaired as approved by the Contracting Officer. See the attached Contractor's required warranty for issue resolution of warrantable defects. This warranty shall warrant and cover the entire cost of repair or replacement, including all material, labor, and related markups. The Contractor shall supplement this warranty with written warranties from the installer and system manufacturer, which shall be submitted along with Contractor's warranty; however, the Contractor shall be ultimately responsible for this warranty. The Contractor's written warranty shall be as outlined in attached WARRANTY FOR STRUCTURAL STANDING SEAM METAL ROOF (SSSMR) SYSTEM, and shall start upon final acceptance of the facility. It is required that the Contractor provide a separate bond in an amount equal to the installed total roofing system cost in favor of the owner (Government) covering the Contractor's warranty responsibilities effective throughout the five year Contractor's warranty period for the entire SSSMR system as outlined above.

1.7.2 Manufacturer's Material Warranties.

The Contractor shall furnish, in writing, the following manufacturer's material warranties which cover all SSSMR system components such as roof panels, anchor clips and fasteners, flashing, accessories, and trim, fabricated from coil material:

a. A manufacturer's 20 year material warranty warranting that the aluminum, zinc-coated steel, aluminum-zinc alloy coated steel or aluminum-coated steel as specified herein will not rupture, structurally fail, fracture, deteriorate, or become perforated under normal design atmospheric conditions and service design loads. Liability under this warranty shall be limited exclusively to the cost of either repairing or replacing nonconforming, ruptured, perforated, or structurally failed coil material.

b. A manufacturer's 20 year exterior material finish warranty on the factory colored finish warranting that the finish, under normal atmospheric conditions at the site, will not crack, peel, or delaminate; chalk in excess of a numerical rating of eight, as determined by ASTM D 4214 test procedures; or change color in excess of five CIE or Hunter Lab color difference (delta E) units in accordance with ASTM D 2244. Liability under this warranty is exclusively limited to refinishing with an air-drying version of the specified finish or replacing the defective coated material.

c. A roofing system manufacturer's 20 year system weathertightness warranty.

1.8 COORDINATION MEETING

A coordination meeting shall be held within 45 days after contract award for mutual understanding of the Structural Standing Seam Metal Roof (SSSMR) System contract requirements. This meeting shall take place at the building site and shall include representatives from the Contractor, the roof system manufacturer, the roofing supplier, the erector, the designer, and the Contracting Officer. All items required by paragraph SUBMITTALS shall be discussed, including applicable standard manufacturer shop drawings, and the approval process. The Contractor shall coordinate time and arrangements for the meeting.

PART 2 PRODUCTS

2.1 ROOF PANELS

Panels shall be steel or aluminum and shall have a factory color finish. Length of sheets shall be sufficient to cover the entire length of any unbroken roof slope for slope lengths that do not exceed 30 feet. When length of run exceeds 30 feet and panel laps are provided, each sheet in the run shall extend over three or more supports. Sheets longer than 100 feet may be furnished if approved by the Contracting Officer. Width of sheets shall provide not more than 24 inches of coverage in place. SSSMR system with roofing panels greater than 12 inches in width shall have standing seams rolled during installation by an electrically driven seaming machine. Height of standing seams shall be not less than 2-1/2 inches for rolled seam .

2.1.1 Steel Panels

Steel panels shall be zinc-coated steel conforming to ASTM A 653/A 653M; aluminum-zinc alloy coated steel conforming to ASTM A 792/A 792M, AZ 55 coating; or aluminum-coated steel conforming to ASTM A 463/A 463M, Type 2, coating designation T2 65. Uncoated panels shall be 0.0239 inch thick minimum. Panels shall be within 95 percent of nominal thickness. Prior to shipment, mill finish panels shall be treated with a passivating chemical to inhibit the formation of oxide corrosion products. Panels that have become wet during

shipment and have started to oxidize shall be rejected.

2.1.2 Aluminum Panels

Alloy conforming to ASTM B 209, temper as required for the forming operation, minimum 0.032 inch thick.

2.2 CONCEALED ANCHOR CLIPS

Concealed anchor clips shall be the same as the tested roofing system. Clip bases shall have factory punched or drilled holes for attachment. Clips shall be made from multiple pieces with the allowance for the total thermal movement required to take place within the clip. Single piece clips may be acceptable when the manufacturer can substantiate that the system can accommodate the thermal cyclic movement under sustained live or snow loads.

2.3 ACCESSORIES

Flashing, trim, metal closure strips, caps and similar metal accessories shall be the manufacturer's standard products. Exposed metal accessories shall be finished to match the panels furnished. Molded closure strips shall be bituminous-saturated fiber, closed-cell or solid-cell synthetic rubber or neoprene, or polyvinyl chloride premolded to match configuration of the panels and shall not absorb or retain water. Die cast metal closures shall be installed with double bead tape sealant and fasteners that stitch the panel to a 16 gage preformed backer plate to ensure a positive compression of the tape sealant. The use of a continuous angle butted to the panel ends to form a closure will not be allowed.

2.4 FASTENERS

Fasteners for steel roof panels shall be zinc-coated steel, aluminum, corrosion resisting steel, or nylon capped steel, type and size specified below or as otherwise approved for the applicable requirements. Fasteners for aluminum roof panels shall be aluminum or corrosion resisting steel. Fasteners for structural connections shall provide both tensile and shear ultimate strengths of not less than 750 pounds per fastener. Fasteners for accessories shall be the manufacturer's standard. Exposed roof fasteners shall be sealed or have sealed washers on the exterior side of the roof to waterproof the fastener penetration. Washer material shall be compatible with the roofing; have a minimum diameter of 3/8 inch for structural connections; and gasketed portion of fasteners or washers shall be neoprene or other equally durable elastomeric material approximately 1/8 inch thick. Exposed fasteners for factory color finished panels shall be factory finished to match the color of the panels.

2.4.1 Screws

Screws for attaching anchor devices shall be not less than No. 14. Actual screw pull out test results shall be performed for the actual material gage and yield strength of the structural purlins or subpurlins to which the clip is to be anchored/attached. Other screws shall be as recommended by the manufacturer to meet the strength design requirements of the panels.

2.4.2 Bolts

Bolts shall be not less than 1/4 inch diameter, shouldered or plain shank as required, with locking washers and nuts.

2.4.3 Structural Blind Fasteners

Blind screw-type expandable fasteners shall be not less than 1/4 inch diameter. Blind (pop) rivets shall be not less than 9/32 inch minimum diameter.

2.5 SUBPURLINS

Cold formed supporting structural members/subpurlins shall have a minimum thickness of 0.059 inches and a minimum tensile yield strength of 50000 psi. Hot rolled structural members shall have a minimum thickness of 0.25 inches and a minimum tensile yield strength of 36000 psi. Subpurlins shall be shop painted.

2.6 FACTORY COLOR FINISH

Panels shall have a factory applied polyvinylidene fluoride finish on the exposed side. The exterior finish shall consist of a baked-on topcoat with an appropriate prime coat. Color shall match the color indicated in Section 09915 COLOR SCHEDULE. The exterior coating shall be a nominal 2 mil thickness consisting of a topcoat of not less than 0.7 mil dry film thickness and the paint manufacturer's recommended primer of not less than 1 mil thickness. The interior color finish shall consist of a nominal 1 mil thick PVF2 finish otherwise the same as the exterior. The exterior color finish shall meet the test requirements specified below.

2.6.1 Salt Spray Test

A sample of the sheets shall withstand a salt spray test for a minimum of 1000 hours in accordance with ASTM B 117, including the scribe requirement in the test. Immediately upon removal of the panel from the test, the coating shall receive a rating of 10, no blistering, as determined by ASTM D 714; and a rating of 8, 1/32 inch failure at scribe, as determined by ASTM D 1654.

2.6.2 Formability Test

When subjected to testing in accordance with ASTM D 522 Method B, 1/8 inch diameter mandrel, the coating film shall show no evidence of cracking to the naked eye.

2.6.3 Accelerated Weathering, Chalking Resistance and Color Change

A sample of the sheets shall be tested in accordance with ASTM D 4587, test condition B for 5 total hours. The coating shall withstand the weathering test without cracking, peeling, blistering, loss of adhesion of the protective coating, or corrosion of the base metal. Protective coating that can be readily removed from the base metal with tape in accordance with ASTM D 3359, Test Method B, shall be considered as an area indicating loss of adhesion. Following the accelerated weathering test, the coating shall have a chalk rating not less than No. 8 in accordance with ASTM D 4214 test procedures, and the color change shall not exceed 5 CIE or Hunter Lab color difference (delta E) units in accordance with ASTM D 2244. For sheets required to have a low gloss finish, the chalk rating shall be not less than No. 6 and the color difference shall be not greater than 7 units.

2.6.4 Humidity Test

When subjected to a humidity cabinet test in accordance with ASTM D 2247 for 1000 hours, a scored panel shall show no signs of blistering, cracking, creepage or corrosion.

2.6.5 Impact Resistance

Factory-painted sheet shall withstand direct and reverse impact in accordance with ASTM D 2794 0.500 inch diameter hemispherical head indenter, equal to 1.5 times the metal thickness in mils, expressed in inch-pounds, with no cracking.

2.6.6 Abrasion Resistance Test

When subjected to the falling sand test in accordance with ASTM D 968, Method A, the coating system shall withstand a minimum of 80 liters of sand before the appearance of the base metal. The term "appearance of base metal" refers to the metallic coating on steel or the aluminum base metal.

2.6.7 Specular Gloss

Finished roof surfaces shall have a specular gloss value of 30 at 60 degrees when measured in accordance with ASTM D 523.

2.6.8 Pollution Resistance

Coating shall show no visual effects when covered spot tested in a 10 percent hydrochloric acid solution for 24 hours in accordance with ASTM D 1308.

2.7 INSULATION

Thermal resistance of insulation shall be not less than the R-values shown on the contract drawings. R-values shall be determined at a mean temperature of 75 degrees F in accordance with ASTM C 518. Insulation shall be a standard product with the insulation manufacturer, factory marked or identified with insulation manufacturer's name or trademark and R-value. Identification shall be on individual pieces or individual packages. Insulation shall have a flame spread not in excess of 25 and a smoke developed rating not in excess of 50 when tested in accordance with ASTM E 84. The stated R-value of the insulation shall be certified by an independent Registered Professional Engineer if tests are conducted in the insulation manufacturer's laboratory.

2.7.1 Polyisocyanurate Rigid Board Insulation for Use Above a Roof Deck

Polyisocyanurate insulation shall conform to ASTM C 1289, Type II, (having a minimum recovered material content of 9 percent by weight of core material in the polyisocyanurate portion). For polyisocyanurate, the maximum design R-value per 1 inch of insulation used shall be 7.2. Facings shall be non-asphaltic, glass fiber reinforced.

2.7.2 Blanket Insulation

Blanket insulation shall conform to ASTM C 991.

2.8 INSULATION RETAINERS

Insulation retainers shall be type, size, and design necessary to adequately hold the insulation and to provide a neat appearance. Metallic retaining members shall be nonferrous or have a nonferrous coating. Nonmetallic retaining members, including adhesives used in conjunction with mechanical retainers or at insulation seams, shall have a fire resistance classification not less than that permitted for the insulation.

2.9 SEALANT

Sealants shall be elastomeric type containing no oil or asphalt. Exposed sealant shall be clear and shall cure to a rubberlike consistency. Sealant placed in the roof panel standing seam ribs shall be provided in accordance with the manufacturer's recommendations.

2.10 GASKETS AND INSULATING COMPOUNDS

Gaskets and insulating compounds shall be nonabsorptive and suitable for insulating contact points of incompatible materials. Insulating compounds shall be nonrunning after drying.

2.11 VAPOR RETARDER

2.11.1 Vapor Retarders Separate from Insulation

Vapor retarder material shall be a special vapor control laminate consisting of multiple layers of polyethylene sheeting conforming to ASTM D 4397and aluminum or mylar manufactured and marketed specifically for the control of moisture vapor. The laminate product shall have a tested perm rating of 0.0 in a flat condition and less than 0.02 in a creased or folded condition. The product shall also maintain its composition through 10,000 cycles of flexing and provide a tensile strength of at least 2,000 psi. A fully compatible sealing tape which has equal moisture vapor control characteristics than the vapor retarder material shall be provided. A cloth industrial duct tape in a utility grade shall also be provided to use as needed to protect the vapor retarder from puncturing.

2.11.2 Slip Sheet for Use With Vapor Retarder

Slip sheet for use with vapor retarder shall be a 5 lb. per 100 square feet rosin-sized, unsaturated building paper.

2.12 EPDM RUBBER BOOTS

Flashing devices around pipe penetrations shall be flexible, one-piece devices molded from weather-resistant EPDM rubber. Rubber boot material shall be as recommended by the manufacturer. The boots shall have base rings made of aluminum or corrosion resisting steel that conform to the contours of the roof panel to form a weather-tight seal.

2.13 PREFABRICATED CURBS AND EQUIPMENT SUPPORTS

Prefabricated curbs and equipment supports shall be of structural quality, hot-dipped galvanized or galvanized sheet steel, factory primed and prepared for painting with mitered and welded joints. Integral base plates and water diverter crickets shall be provided. Minimum height of curb shall be 8 inches above finish roof. Curbs shall be constructed to match roof slope and to provide a level top surface for mounting of equipment. Curb flange shall be constructed to match configuration of roof panels. Curb size shall be coordinated, prior to curb fabrication, with the mechanical equipment to be supported. Strength requirements for equipment supports shall be coordinated to include all anticipated loads. Flashings shall not be rigidly attached to underline structure.

PART 3 EXECUTION

3.1 INSTALLATION

Installation shall be in accordance with the manufacturer's erection instructions and drawings. Dissimilar materials which are not compatible when contacting each other shall be insulated by means of gaskets or insulating compounds. Molded closure strips shall be installed wherever roofing sheets terminate in open-end configurations, exclusive of flashings. The closure strip installation shall be weather-tight and sealed. Screws shall be installed with a clutching screw gun, to assure screws are not stripped. Field test shall be conducted on each gun prior to starting installation and periodically thereafter to assure it is adjusted properly to install particular type and size of screw as recommended by manufacturer's literature. Improper or mislocated drill holes shall be plugged with an oversize screw fastener and gasketed washer; however, sheets with an excess of such holes or with such holes in critical locations shall not be used. Exposed surfaces and edges shall be kept clean and free from sealant, metal cuttings, hazardous burrs, and other foreign material. Stained, discolored, or damaged sheets shall be removed from the site.

3.1.1 Field Forming of Panels for Unique Area

When roofing panels are formed from factory-color-finished steel coils at the project site, the same care and quality control measures that are taken in shop forming of roofing panels shall be observed. Rollformer shall be operated by the metal roofing manufacturer's representative. In cold weather conditions, preheating of the steel coils to be field formed shall be performed as necessary just prior to the rolling operations.

3.1.2 Subpurlins

Unless otherwise shown, subpurlins shall be anchored through the roof deck to the steel joists, trusses, or beams with bolts or screws. Spacers shall be provided as required between subpurlins and joists to prevent crushing of the roof deck. Attachment to the substrate (when provided) or to the panels is not permitted. The subpurlin spacing shall not exceed 30 inches on centers at the corner, edge and ridge zones, and 5 foot maximum on centers for the remainder of the roof. Corner, edge, and ridge zones are as defined in ASCE 7.

3.1.3 Roof Panel Installation

Roof panels shall be installed with the standing seams in the direction of the roof slope. The side seam connections for installed panels shall be completed at the end of each day's work. Method of applying joint sealant shall conform to the manufacturer's recommendation to achieve a complete weather-tight installation. End laps of panels shall be provided in accordance with the manufacturer's instructions. Closures, flashings, EPDM rubber boots, roof curbs, and related accessories shall be installed according to the manufacturer's drawings. Fasteners shall not puncture roofing sheets except as provided for in the manufacturer's instructions for erection and installation. Expansion joints for the standing seam roof system shall be installed at locations indicated on the contract drawings and other locations indicated on the manufacturer's drawings.

3.1.4 Concealed Anchor Clips

Concealed anchor clips shall be fastened directly to the structural framing members. Attachment to the substrate (when provided) or to the metal deck is not permitted. The maximum distance, parallel to the seams, between clips shall be 30 inches on center at the corner, edge, and ridge zones, and 5 feet maximum on centers for the remainder of the roof.

3.2 INSULATION INSTALLATION

Insulation shall be continuous over entire roof surface. Where expansion joints, terminations, and other connections are made, the cavity shall be filled with batt insulation with vapor retarder providing equivalent R-value and perm rating as remaining insulation. Insulation shall be installed as indicated and in accordance with manufacturer's instructions.

3.2.1 Board Insulation with Blanket Insulation

Rigid or semirigid board insulation shall be laid in close contact. Board shall be attached to the metal roof deck with bearing plates and fasteners, as recommended by the insulation manufacturer, so that the insulation joints are held tight against each other, and shall have a minimum of 1 fastener per 4 square feet. Layout and joint pattern of insulation and fasteners shall be indicated on the shop drawings. If more than one layer of insulation is required, joints in the second layer shall be offset from joints in the first layer. A layer of blanket insulation shall be placed over the rigid or semirigid board insulation to be compressed against the underside of the metal roofing to reduce thermal bridging, dampen noise, and prevent roofing flutter. This layer of blanket insulation shall be compressed a minimum of 50 percent.

3.2.2 Blanket Insulation

Blanket insulation shall be installed between and parallel to the purlins with tabs of a facer lapping on the top face of the purlins. Thermal blocks shall be provided over purlins, between clips. A second layer of unfaced insulation shall be added between purlins to provide full R-value. Blanket insulation shall be supported by an integral facing or other commercially available support system.

3.3 PROTECTION OF VAPOR RETARDER FROM ROOF DECK

A cloth industrial duct tape shall be applied over the seams of metal roof decks, at penetration edges, and at surface areas exhibiting sharp burrs or similar protrusions. For other types of roof decks, cloth industrial duct tape shall be applied over irregularities which could potentially puncture polyethylene membrane.

3.4 VAPOR RETARDER INSTALLATION

3.4.1 Polyethylene Vapor Retarder

The vapor retarder laminate membrane shall be installed over the entire surface of the structural metal deck. A fully compatible tape shall be used to seal the edges as directed by the manufacturer of the product including seams, edges at purlins, and along the perimeter of the roof edges to the steel structure of the sheets to provide a vapor tight membrane. Sheet edges shall be lapped not less than 6 inches. Sufficient material shall be provided to avoid inducing stresses in the sheets due to stretching or binding. All tears or punctures that are visible in the finished surface at any time during the construction process shall be sealed.

3.5 SLIP SHEET INSTALLATION

A slip sheet shall be laid over the blanket insulation facing to prevent the vinyl facing from adhering to the metal roofing.

3.6 CLEANING AND TOUCH-UP

Exposed SSSMR systems shall be cleaned at completion of installation. Debris that could cause discoloration and harm to the panels, flashings, closures and other accessories shall be removed. Grease and oil films, excess sealants, and handling marks shall be removed and the work shall be scrubbed clean. Exposed metal surfaces shall be free of dents, creases, waves, scratch marks, and solder or weld marks. Immediately upon detection, abraded or corroded spots on shop-painted surfaces shall be wire brushed and touched up with the same material used for the shop coat. Factory color finished surfaces shall be touched up with the manufacturer's recommended touch up paint.

CONTRACTOR'S FIVE (5) YEAR NO PENAL SUM WARRANTY
FOR
STRUCTURAL STANDING SEAM METAL ROOF (SSSMR) SYSTEM

FACILITY DESCRIPTION_____

BUILDING NUMBER:_____

CORPS OF ENGINEERS CONTRACT NUMBER:_____

CONTRACTOR

CONTRACTOR:_____

ADDRESS:_____

POINT OF CONTACT:_____

TELEPHONE NUMBER:_____

OWNER

OWNER:_____

ADDRESS:_____

POINT OF CONTACT:_____

TELEPHONE NUMBER:_____

CONSTRUCTION AGENT

CONSTRUCTION AGENT:_____

ADDRESS:_____

POINT OF CONTACT:_____

TELEPHONE NUMBER:_____

CONTRACTOR'S FIVE (5) YEAR NO PENAL SUM WARRANTY
FOR
STRUCTURAL STANDING SEAM METAL ROOF (SSSMR) SYSTEM
(continued)

THE SSSMR SYSTEM INSTALLED ON THE ABOVE NAMED BUILDING IS WARRANTED BY _____ FOR A PERIOD OF FIVE (5) YEARS AGAINST WORKMANSHIP AND MATERIAL DEFICIENCES, WIND DAMAGE, STRUCTURAL FAILURE, AND LEAKAGE. THE SSSMR SYSTEM COVERED UNDER THIS WARRANTY SHALL INCLUDE, BUT SHALL NOT BE LIMITED TO, THE FOLLOWING: THE ENTIRE ROOFING SYSTEM, MANUFACTURER SUPPLIED FRAMING AND STRUCTURAL MEMBERS, METAL ROOF PANELS, FASTENERS, CONNECTORS, ROOF SECUREMENT COMPONENTS, AND ASSEMBLIES TESTED AND APPROVED IN ACCORDANCE WITH ASTM E 1592. IN ADDITION, THE SYSTEM PANEL FINISHES, SLIP SHEET, INSULATION, VAPOR RETARDER, ALL ACCESSORIES, COMPONENTS, AND TRIM AND ALL CONNECTIONS ARE INCLUDED. THIS INCLUDES ROOF PENETRATION ITEMS SUCH AS VENTS, CURBS, SKYLIGHTS; INTERIOR OR EXTERIOR GUTTERS AND DOWNSPOUTS; EAVES, RIDGE, HIP, VALLEY, RAKE, GABLE, WALL, OR OTHER ROOF SYSTEM FLASHINGS INSTALLED AND ANY OTHER COMPONENTS SPECIFIED WITHIN THIS CONTRACT TO PROVIDE A WEATHERTIGHT ROOF SYSTEM; AND ITEMS SPECIFIED IN OTHER SECTIONS OF THE SPECIFICATIONS THAT ARE PART OF THE SSSMR SYSTEM.

ALL MATERIAL DEFICIENCIES, WIND DAMAGE, STRUCTURAL FAILURE, AND LEAKAGE ASSOCIATED WITH THE SSSMR SYSTEM COVERED UNDER THIS WARRANTY SHALL BE REPAIRED AS APPROVED BY THE CONTRACTING OFFICER. THIS WARRANTY SHALL COVER THE ENTIRE COST OF REPAIR OR REPLACEMENT, INCLUDING ALL MATERIAL, LABOR, AND RELATED MARKUPS. THE ABOVE REFERENCED WARRANTY COMMENCED ON THE DATE OF FINAL ACCEPTANCE ON _____ AND WILL REMAIN IN EFFECT FOR STATED DURATION FROM THIS DATE.

SIGNED, DATED, AND NOTARIZED (BY COMPANY PRESIDENT)

_____

(Company President) (Date)

CONTRACTOR'S FIVE (5) YEAR NO PENAL SUM WARRANTY
FOR
STRUCTURAL STANDING SEAM METAL ROOF (SSSMR) SYSTEM
(continued)

THE CONTRACTOR SHALL SUPPLEMENT THIS WARRANTY WITH WRITTEN WARRANTIES FROM THE MANUFACTURER AND/OR INSTALLER OF THE SSSMR SYSTEM, WHICH SHALL BE SUBMITTED ALONG WITH THE CONTRACTOR'S WARRANTY. HOWEVER, THE CONTRACTOR WILL BE ULTIMATELY RESPONSIBLE FOR THIS WARRANTY AS OUTLINED IN THE SPECIFICATIONS AND AS INDICATED IN THIS WARRANTY EXAMPLE.

EXCLUSIONS FROM COVERAGE

1. NATURAL DISASTERS, LIGHTNING, FIRE, EXPLOSIONS, SUSTAINED WIND FORCES IN EXCESS OF THE DESIGN CRITERIA, EARTHQUAKES, AND HAIL.

2. ACTS OF NEGLIGENCE OR ABUSE OR MISUSE BY GOVERNMENT OR OTHER PERSONNEL, INCLUDING ACCIDENTS, VANDALISM, CIVIL DISOBEDIENCE, WAR, OR DAMAGE CAUSED BY FALLING OBJECTS.

3. DAMAGE BY STRUCTURAL FAILURE, SETTLEMENT, MOVEMENT, DISTORTION, WARPAGE, OR DISPLACEMENT OF THE BUILDING STRUCTURE OR ALTERATIONS MADE TO THE BUILDING.

4. CORROSION CAUSED BY EXPOSURE TO CORROSIVE CHEMICALS, ASH OR FUMES GENERATED OR RELEASED INSIDE OR OUTSIDE THE BUILDING FROM CHEMICAL PLANTS, FOUNDRIES, PLATING WORKS, KILNS, FERTILIZER FACTORIES, PAPER PLANTS, AND THE LIKE.

5. FAILURE OF ANY PART OF THE SSSMR SYSTEM DUE TO ACTIONS BY THE OWNER TO INHIBIT FREE DRAINAGE OF WATER FROM THE ROOF AND GUTTERS AND DOWNSPOUTS OR ALLOW PONDING WATER TO COLLECT ON THE ROOF SURFACE. CONTRACTOR'S DESIGN SHALL INSURE FREE DRAINAGE FROM THE ROOF AND NOT ALLOW PONDING WATER.

6. THIS WARRANTY APPLIES TO THE SSSMR SYSTEM. IT DOES NOT INCLUDE ANY CONSEQUENTIAL DAMAGE TO THE BUILDING INTERIOR OR CONTENTS WHICH IS COVERED BY THE WARRANTY OF CONSTRUCTION CLAUSE INCLUDED IN THIS CONTRACT.

7. THIS WARRANTY CANNOT BE TRANSFERRED TO ANOTHER OWNER WITHOUT WRITTEN CONSENT OF THE CONTRACTOR; AND THIS WARRANTY AND THE CONTRACT PROVISIONS WILL TAKE PRECEDENCE OVER ANY CONFLICTS WITH STATE STATUTES.

**

CONTRACTOR'S FIVE (5) YEAR NO PENAL SUM WARRANTY
FOR
STRUCTURAL STANDING SEAM METAL ROOF (SSSMR) SYSTEM
(continued)

**REPORTS OF LEAKS AND SSSMR SYSTEM DEFICIENCIES SHALL BE RESPONDED TO WITHIN 48 HOURS OF RECEIPT OF NOTICE, BY TELEPHONE OR IN WRITING, FROM EITHER THE OWNER OR CONTRACTING OFFICER. EMERGENCY REPAIRS TO PREVENT FURTHER ROOF LEAKS SHALL BE INITIATED IMMEDIATELY; A WRITTEN PLAN SHALL BE SUBMITTED FOR APPROVAL TO REPAIR OR REPLACE THIS SSSMR SYSTEM WITHIN SEVEN (7) CALENDAR DAYS. ACTUAL WORK FOR PERMANENT REPAIRS OR REPLACEMENT SHALL BE STARTED WITHIN 30 DAYS AFTER RECEIPT OF NOTICE, AND COMPLETED WITHIN A REASONABLE TIME FRAME. IF THE CONTRACTOR FAILS TO ADEQUATELY RESPOND TO THE WARRANTY PROVISIONS, AS STATED IN THE CONTRACT AND AS CONTAINED HEREIN, THE CONTRACTING OFFICER MAY HAVE THE SSSMR SYSTEM REPAIRED OR REPLACED BY OTHERS AND CHARGE THE COST TO THE CONTRACTOR.

IN THE EVENT THE CONTRACTOR DISPUTES THE EXISTENCE OF A WARRANTABLE DEFECT, THE CONTRACTOR MAY CHALLENGE THE OWNER'S DEMAND FOR REPAIRS AND/OR REPLACEMENT DIRECTED BY THE OWNER OR CONTRACTING OFFICER EITHER BY REQUESTING A CONTRACTING OFFICER'S DECISION UNDER THE CONTRACT DISPUTES ACT, OR BY REQUESTING THAT AN ARBITRATOR RESOLVE THE ISSUE. THE REQUEST FOR AN ARBITRATOR MUST BE MADE WITHIN 48 HOURS OF BEING NOTIFIED OF THE DISPUTED DEFECTS. UPON BEING INVOKED, THE PARTIES SHALL, WITHIN TEN (10) DAYS, JOINTLY REQUEST A LIST OF FIVE (5) ARBITRATORS FROM THE FEDERAL MEDIATION AND CONCILIATION SERVICE. THE PARTIES SHALL CONFER WITHIN TEN (10) DAYS AFTER RECEIPT OF THE LIST TO SEEK AGREEMENT ON AN ARBITRATOR. IF THE PARTIES CANNOT AGREE ON AN ARBITRATOR, THE CONTRACTING OFFICER AND THE PRESIDENT OF THE CONTRACTOR'S COMPANY WILL STRIKE ONE (1) NAME FROM THE LIST ALTERNATIVELY UNTIL ONE (1) NAME REMAINS. THE REMAINING PERSON SHALL BE THE DULY SELECTED ARBITRATOR. THE COSTS OF THE ARBITRATION, INCLUDING THE ARBITRATOR'S FEE AND EXPENSES, COURT REPORTER, COURTROOM OR SITE SELECTED, ETC., SHALL BE BORNE EQUALLY BETWEEN THE PARTIES. EITHER PARTY DESIRING A COPY OF THE TRANSCRIPT SHALL PAY FOR THE TRANSCRIPT. A HEARING WILL BE HELD AS SOON AS THE PARTIES CAN MUTUALLY AGREE. A WRITTEN ARBITRATOR'S DECISION WILL BE REQUESTED NOT LATER THAN 30 DAYS FOLLOWING THE HEARING. THE DECISION OF THE ARBITRATOR WILL NOT BE BINDING; HOWEVER, IT WILL BE ADMISSIBLE IN ANY SUBSEQUENT APPEAL UNDER THE CONTRACT DISPUTES ACT.

A FRAMED COPY OF THIS WARRANTY SHALL BE POSTED IN THE MECHANICAL ROOM OR OTHER APPROVED LOCATION DURING THE ENTIRE WARRANTY PERIOD.

-- End of Section --

SECTION TABLE OF CONTENTS

DIVISION 07 - THERMAL & MOISTURE PROTECTION

SECTION 07510A

BUILT-UP ROOFING

10/01

PART 1 GENERAL

1.1 REFERENCES
1.2 SUBMITTALS
1.3 STORAGE OF MATERIALS

PART 2 PRODUCTS

2.1 PRIMER
2.2 BITUMEN
2.2.1 Asphalt
2.2.2 Coal-Tar Bitumen
2.3 BITUMINOUS CEMENT
2.4 FELT
2.4.1 Base Sheet
2.4.2 Venting Inorganic Base Sheet
2.4.3 Glass Roofing Felt
2.4.4 Organic Felt Base
2.4.5 Organic Felt
2.5 NAILS AND FASTENERS
2.6 WOVEN GLASS FABRIC
2.7 INSULATION
2.8 GLASS MAT GYPSUM ROOF BOARD
2.9 FLASHINGS

PART 3 EXECUTION

3.1 COORDINATION
3.1.1 Insulation
3.1.2 Sheet Metalwork
3.2 ENVIRONMENTAL CONDITIONS
3.3 PREPARATION REQUIREMENTS
3.4 CONDITION OF SURFACES
3.5 MECHANICAL APPLICATION DEVICES
3.6 PRIMING
3.7 HEATING OF BITUMEN
3.8 BITUMEN STOPS
3.9 BITUMEN APPLICATION
3.10 APPLICATION OF FELTS
3.10.1 On Concrete or Insulation Surfaces
3.11 MECHANICAL FASTENING
3.12 FLASHINGS
3.12.1 Base Flashings
3.12.2 Strip Flashings

-- End of Section Table of Contents --

SECTION 07510A

BUILT-UP ROOFING
10/01

PART 1 GENERAL

1.1 REFERENCES

The publications listed below form a part of this specification to the extent referenced. The publications are referred to in the text by basic designation only.

AMERICAN SOCIETY FOR TESTING AND MATERIALS (ASTM)

ASTM C 1177/C 1177M	(1999) Glass Mat Gypsum Substrate for Use as Sheathing
ASTM D 41	(1994) Asphalt Primer Used in Roofing, Dampproofing, and Waterproofing
ASTM D 43	(2000) Coal Tar Primer Used in Roofing, Dampproofing, and Waterproofing
ASTM D 226	(1997a) Asphalt-Saturated Organic Felt Used in Roofing and Waterproofing
ASTM D 227	(1998) Coal-Tar Saturated Organic Felt Used in Roofing and Waterproofing
ASTM D 312	(2000) Asphalt Used in Roofing
ASTM D 450	(1996) Coal-Tar Pitch Used in Roofing, Dampproofing, and Waterproofing
ASTM D 1668	(1997a) Glass Fabrics (Woven and Treated) for Roofing and Waterproofing
ASTM D 1863	(1993; R 1996) Mineral Aggregate Used on Built-Up Roofs
ASTM D 2178	(1997a) Asphalt Glass Felt Used in Roofing and Waterproofing
ASTM D 2626	(1997b) Asphalt-Saturated and Coated Organic Felt Base Sheet Used in Roofing
ASTM D 4022	(1994) Coal Tar Roof Cement, Asbestos Containing
ASTM D 4586	(1993; R 1999) Asphalt Roof Cement, Asbestos Free
ASTM D 4601	(1998) Asphalt-Coated Glass Fiber Base Sheet Used in Roofing
ASTM D 4897	(1998) Asphalt-Coated Glass-Fiber Venting Base Sheet Used in Roofing

FACTORY MUTUAL ENGINEERING AND RESEARCH (FM)

FM P7825c (1998) Approval Guide Building Materials

1.2 SUBMITTALS

Government approval is required for submittals with a "G" designation; submittals not having a "G" designation are for information only. When used, a designation following the "G" designation identifies the office that will review the submittal for the Government. The following shall be submitted in accordance with Section 01330 SUBMITTAL PROCEDURES:

SD-07 Certificates

Bitumen;
Felt;

1.3 STORAGE OF MATERIALS

Felts, fabrics, and roll roofing shall be kept dry before, during, and after delivery to the site and shall be stored in an enclosed building or in a closed trailer, and stored on end 1 level high. Felt rolls shall be maintained at a temperature above 50 degrees F for 24 hours immediately before laying. Aggregate shall be kept dry as defined by ASTM D 1863.

PART 2 PRODUCTS

2.1 PRIMER

ASTM D 41 for asphalt roofing systems; ASTM D 43 for coal-tar roofing systems.

2.2 BITUMEN

2.2.1 Asphalt

ASTM D 312, Type II on slopes from 1/4 inch per foot up to and including 1/2 inch per foot; Type II or Type III on slopes above1/2 inch per foot up to and including 1 inch per foot; Type III on slopes above 1 inch per foot up to and including 3 inches per foot. Bills of lading shall indicate the flash point and equiviscous temperature (EVT) or this information shall be shown on labels for each container of asphalt.

2.2.2 Coal-Tar Bitumen

ASTM D 450, Type III, for 1/4 inch per foot slope as an option to asphalt.

2.3 BITUMINOUS CEMENT

ASTM D 4586 for use with asphalt roofing systems. ASTM D 4022 for use with coal-tar roofing systems; preference shall be given to cements whose mineral fillers exclude asbestos fibers.

2.4 FELT

2.4.1 Base Sheet

Base sheet shall conform to ASTM D 4601, Type II, with no perforations.

2.4.2 Venting Inorganic Base Sheet

ASTM D 4897, Type II.

2.4.3 Glass Roofing Felt

ASTM D 2178, Type IV or VI, except felts for coal tar systems shall be

impregnated with a bituminous resin coating which is compatible with coal tar bitumen.

2.4.4 Organic Felt Base

ASTM D 2626 for use with asphalt roofing system.

2.4.5 Organic Felt

ASTM D 226 for use with asphalt roofing system and ASTM D 227 for use with coal-tar roofing system. Organic felts may be used for bitumen stops, and edge envelopes.

2.5 NAILS AND FASTENERS

Nails and fasteners shall be an approved type recommended by the roofing felt manufacturer. Fasteners for steel or concrete deck shall conform to FM P7825c for Class I roof deck construction, to withstand an uplift pressure of 90 pounds per square foot.

2.6 WOVEN GLASS FABRIC

ASTM D 1668, Type I for asphalt roofing systems and Type II for coal-tar roofing systems.

2.7 INSULATION

Insulation shall be fiberboard, composite board, expanded perlite, mineral fiber, or polyisocyanurate. Top layer shall be minimum 3/4 inch thick fiberboard, mineral fiber or perlite.

2.8 GLASS MAT GYPSUM ROOF BOARD

Glass mat gypsum roof board shall be in accordance with ASTM C 1177/C 1177M, flame spread - 0, smoke developed - 0, 500 psi Class A non-combustible. The glass mat gypsum roof board shall be a minimum 1/4 inch thickness.

2.9 FLASHINGS

Bituminous flashings in accordance with these specifications shall be used throughout unless otherwise specified or indicated.

PART 3 EXECUTION

3.1 COORDINATION

The entire roofing system, excluding flood coat and aggregate surfacing, shall be finished in 1 operation up to the line of termination at end of day's work. Glaze coating may be considered part of the flood coat as specified in paragraph GLAZE COAT. Phased construction will not be permitted.

3.1.1 Insulation

Application of roofing shall immediately follow application of insulation as a continuous operation. Roofing operations shall be coordinated with insulation work so that all roof insulation applied each day is waterproofed the same day.

3.1.2 Sheet Metalwork

Roofing operations shall be coordinated with sheet metalwork so that sheet metal items are installed to permit continuous roof surfacing operations the same day felts are installed. Sheet metalwork is specified in Section 07600a SHEET METALWORK, GENERAL.

3.2 ENVIRONMENTAL CONDITIONS

Air temperature shall be above 40 degrees F and there shall be no visible ice, frost, or moisture on the roof deck at the time roofing is installed.

3.3 PREPARATION REQUIREMENTS

The substrate construction of a bay or section of the building shall be completed before roofing work is begun thereon. Roofing applied directly on concrete shall not be scheduled until frothing or bubbling does not occur when hot bitumen is applied to the concrete and until the hot bitumen sticks tightly to the concrete. Vents and other items penetrating the roof shall be secured in position and properly prepared for flashing. Nailers, curbs and other items attached to roof surface shall be in place before roofing is begun.

3.4 CONDITION OF SURFACES

Surfaces shall be inspected and approved immediately before application of roofing and flashings. The roofing and flashings shall be applied to a smooth and firm surface free from ice, frost, visible moisture, dirt, projections, and foreign materials. Prior to application of primer on precast concrete decks, joints shall be covered with a 4 inch strip of roofing felt, embedded in and coated with bituminous cement.

3.5 MECHANICAL APPLICATION DEVICES

Mechanical application devices shall be mounted on pneumatic-tired wheels, and shall be designed and maintained to operate without damaging the insulation, roofing membrane, or structural components.

3.6 PRIMING

Concrete surfaces to receive bitumen shall be uniformly coated with primer at a rate of not less than 1 gallon per square and allowed to dry. Primer shall be compatible with the bitumen to be used.

3.7 HEATING OF BITUMEN

Asphalt shall not be heated higher than 75 degrees F above the EVT or 50 degrees below the flash point or 525 degrees F (maximum) whichever is lower. EVT and flash point temperatures of asphalt in the kettle shall be conspicuously posted on the kettle. Coal tar bitumen shall not be heated above as recommended by the roofing manufacturer. Heating kettles shall be provided with automatic thermostatic controls and an accurate thermometer. Kettle operators shall be in attendance at all times during the heating to ensure that the maximum temperature specified is not exceeded. Equipment utilizing flame-heat shall not be placed on the roof.

3.8 BITUMEN STOPS

Bitumen stops shall be installed at roof edges, openings and vertical projections before application of roofing plies unless otherwise recommended by the manufacturer's printed instructions. Bitumen stops shall be formed of two 18 inch wide strips of organic felt. Nine inches of the width shall be attached to the roof surface with 9 inches extending beyond the edge. The first strip shall be applied in a 9 inch wide layer of bituminous roofing cement and nailed 1/2 inch from the roof edge at 6 inch spacing. The second strip shall be applied to the first in a 9 inch wide mopping of bitumen. The free portion of each strip shall be protected from damage throughout the roofing period. After the roofing plies are in place, the free portion of each strip shall be folded back over the roofing membrane and embedded in a continuous coating of bituminous cement and secured with roofing nails spaced 3 inches on centers.

3.9 BITUMEN APPLICATION

Asphalt shall be applied within a range of 25 degrees F below to 25 degrees F above the EVT. Temperature of coal-tar bitumen at the time it is applied shall be in accordance with the bitumen manufacturer's recommendations. Application temperatures shall be measured at the mop bucket or mechanical applicator. Bitumen at a temperature below the recommended temperature shall be returned to the kettle. Each layer of felt shall be laid in not less than 20 pounds nor more than 35 pounds of asphalt per square or not less than 30 pounds nor more than 35 pounds of coal-tar bitumen per square. Where solid moppings are required, the following requirements as evidenced in any one roof cut-out sample shall apply:

a. Overlapping voids between two or more plies are not acceptable.

b. The maximum length of any individual void that is encapsulated in bitumen shall be 2 inches.

c. The total length of all voids encapsulated in bitumen shall not exceed 4 inches between any two plies.

d. Dry voids (the absence of bitumen between plies) are not acceptable.

e. Voids continuous through the specimen are not acceptable.

f. Visual interply moisture in voids is not acceptable.

3.10 APPLICATION OF FELTS

Felt plies shall be laid at right angles to the slope of the deck with minimum 6 inch end-laps staggered at least 12 inches. Felts shall be applied in 36 inch widths with 24 2/3 inch side laps and starter sheets 12, 24 and 36 inches wide along eaves to maintain 4 full plies including the base sheet when used. The full 36 inch width of each ply shall be placed in hot bitumen immediately behind the applicator. A broom or follow through tool shall be used to eliminate air pockets and obtain complete adhesion between plies. Bitumen shall be visible beyond all edges of each ply as it is being installed. Plies shall be laid free of wrinkles, creases or fishmouths. Each layer of roofing felt shall be carried up to the top of the cant. Workers shall not walk on mopped surfaces when the bitumen is fluid. For slopes exceeding 1/2 inch per foot, each felt ply, other than venting base sheet, shall be nailed 2 inches and 6 inches from upper edge with nails spaced 12 inches on centers in each row.

3.10.1 On Concrete or Insulation Surfaces

Four plies of 36 inch wide glass roofing felts shall be placed shingle-fashion in solid mopped bitumen.

3.11 MECHANICAL FASTENING

Nails and fasteners for securing roofing shall be flush driven through flat metal disks of not less than 1 inch diameter. Metal disks may be omitted where heads of fasteners are equivalent in size to the 1 inch diameter disks. Fasteners, when required, shall be spaced within 20 percent of the indicated spacing dimensions. There shall be no less than the total number of indicated fasteners in any 100 square feet area. Fastener pull-out resistance shall be not less than 40 pounds each.

3.12 FLASHINGS

Flashings shall be provided in the angles formed at walls and other vertical surfaces and where required to make the work watertight. Bituminous flashings

described below shall be used, except where metal flashings are specified in other sections of the specifications. Flashings shall be provided and installed immediately after the top ply of felt is placed and before the flood coat and aggregate are placed, adjacent to the flashing. Modified bituminous flashing may be used when it is specified in the roofing manufacturer's instructions.

3.12.1 Base Flashings

Base Flashings shall be a 3-ply system using woven glass fabric, laid in roofing cement, with mineral surfaced roll roofing as the outer ply. The top of the base flashing shall be at least 8 inches above the roof membrane surface. Mineral surfaced roofing strips shall be cut from the width of the rolls, and shall extend from the reglet or top of curb onto the roof at least 2 inches beyond the widest flashing ply. Laps shall be well cemented, and where possible, shall be shingled in a direction down slope or away from the prevailing wind. The top edge of base flashing systems shall be nailed a maximum of 8 inches on center.

3.12.2 Strip Flashings

Sheet metal flashings, bitumen stops and gravel stops installed over the roofing top ply shall be strip flashed with 2 layers of roofing felt, 9 inches and 12 inches wide and successively cemented in place.

-- End of Section --

SECTION TABLE OF CONTENTS

DIVISION 07 - THERMAL & MOISTURE PROTECTION

SECTION 07600A

SHEET METALWORK, GENERAL

04/00

PART 1 GENERAL

1.1 REFERENCES
1.2 GENERAL REQUIREMENTS
1.3 SUBMITTALS
1.4 DELIVERY, STORAGE, AND HANDLING

PART 2 PRODUCTS

2.1 MATERIALS
2.1.1 Accessories
2.1.2 Aluminum Extrusions
2.1.3 Bituminous Cement
2.1.4 Sealant
2.1.5 Fasteners
2.1.6 Felt
2.1.7 Aluminum Alloy Sheet and Plate
2.1.8 Copper
2.1.9 Stainless Steel
2.1.10 Solder
2.1.11 Through-Wall Flashing
2.1.12 Louver Screen

PART 3 EXECUTION

3.1 GENERAL REQUIREMENTS
3.2 EXPANSION JOINTS
3.3 PROTECTION OF ALUMINUM
3.3.1 Paint
3.3.2 Nonabsorptive Tape or Gasket
3.4 CONNECTIONS AND JOINTING
3.4.1 Soldering
3.4.2 Riveting
3.4.3 Seaming
3.5 CLEATS
3.6 GUTTERS AND DOWNSPOUTS
3.7 FLASHINGS
3.7.1 Through-Wall Flashing
3.7.1.1 Lintel Flashing
3.7.1.2 Sill Flashing
3.8 INSTALLATION OF LOUVERS
3.9 CONTRACTOR QUALITY CONTROL

-- End of Section Table of Contents --

SECTION 07600A

SHEET METALWORK, GENERAL
04/00

PART 1 GENERAL

1.1 REFERENCES

The publications listed below form a part of this specification to the extent referenced. The publications are referred to in the text by basic designation only.

AMERICAN SOCIETY FOR TESTING AND MATERIALS (ASTM)

ASTM A 167	(1999) Stainless and Heat-Resisting Chromium-Nickel Steel Plate, Sheet, and Strip
ASTM B 32	(1996) Solder Metal
ASTM B 209	(1996) Aluminum and Aluminum-Alloy Sheet and Plate
ASTM B 221	(1996) Aluminum and Aluminum-Alloy Extruded Bars, Rods, Wire, Profiles, and Tubes
ASTM B 370	(1998) Copper Sheet and Strip for Building Construction
ASTM D 226	(1997a) Asphalt-Saturated Organic Felt Used in Roofing and Waterproofing
ASTM D 543	(1995) Evaluating the Resistance of Plastics to Chemical Reagents
ASTM D 822	(1996) Conducting Tests on Paint and Related Coatings and Materials Using Filtered Open-Flame Carbon-Arc Exposure Apparatus
ASTM D 828	(1997) Tensile Properties of Paper and Paperboard Using Constant-Rate-of-Elongation-Apparatus
ASTM D 2822	(1991; R 1997el) Asphalt Roof Cement
ASTM D 4022	(1994) Coal Tar Roof Cement, Asbestos Containing
ASTM D 4586	(1993) Asphalt Roof Cement, Asbestos Free
ASTM E 96	(1995) Water Vapor Transmission of Materials

INSECT SCREENING WEAVERS ASSOCIATION (ISWA)

ISWA IWS 089	(1990) Recommended Standards and Specifications for Insect Wire Screening (Wire Fabric)

SHEET METAL & AIR CONDITIONING CONTRACTORS' NATIONAL ASSOCIATION (SMACNA)

SMACNA Arch. Manual (1993; Errata; Addenda Oct 1997) Architectural Sheet Metal Manual

1.2 GENERAL REQUIREMENTS

Sheet metalwork shall be accomplished to form weathertight construction without waves, warps, buckles, fastening stresses or distortion, and shall allow for expansion and contraction. Cutting, fitting, drilling, and other operations in connection with sheet metal required to accommodate the work of other trades shall be performed by sheet metal mechanics. Installation of sheet metal items used in conjunction with roofing shall be coordinated with roofing work to permit continuous roofing operations.

1.3 SUBMITTALS

Government approval is required for submittals with a "G" designation; submittals not having a "G" designation are for information only. When used, a designation following the "G" designation identifies the office that will review the submittal for the Government. The following shall be submitted in accordance with Section 01330 SUBMITTAL PROCEDURES:

SD-02 Shop Drawings

Materials; G-RE

Drawings of sheet metal items showing weights, gauges or thicknesses; types of materials; expansion-joint spacing; fabrication details; and installation procedures.

1.4 DELIVERY, STORAGE, AND HANDLING

Materials shall be adequately packaged and protected during shipment and shall be inspected for damage, dampness, and wet-storage stains upon delivery to the jobsite. Materials shall be clearly labeled as to type and manufacturer. Sheet metal items shall be carefully handled to avoid damage. Materials shall be stored in dry, ventilated areas until immediately before installation.

PART 2 PRODUCTS

2.1 MATERIALS

Lead, lead-coated metal, and galvanized steel shall not be used. Any metal listed by SMACNA Arch. Manual for a particular item may be used, unless otherwise specified or indicated. Materials shall conform to the requirements specified below and to the thicknesses and configurations established in SMACNA Arch. Manual. Different items need not be of the same metal, except that if copper is selected for any exposed item, all exposed items shall be copper.

2.1.1 Accessories

Accessories and other items essential to complete the sheet metal installation, though not specifically indicated or specified, shall be provided.

2.1.2 Aluminum Extrusions

ASTM B 221, Alloy 6063, Temper T5.

2.1.3 Bituminous Cement

Type I asphalt cement conforming to ASTM D 2822 or ASTM D 4586. For coal tar roofing; coal tar cement conforming to ASTM D 4022.

2.1.4 Sealant

Unless otherwise specified, sealant shall be an elastomeric weather resistant sealant as specified in Section 07900a JOINT SEALING.

2.1.5 Fasteners

Fasteners shall be compatible with the fastened material and shall be the type best suited for the application.

2.1.6 Felt

ASTM D 226, Type I.

2.1.7 Aluminum Alloy Sheet and Plate

ASTM B 209, anodized clear clad, form, alloy, and temper appropriate for use.

2.1.8 Copper

ASTM B 370, Temper H 00.

2.1.9 Stainless Steel

ASTM A 167, Type 302 or 304; fully annealed, dead soft temper.

2.1.10 Solder

ASTM B 32, 95-5 tin-antimony.

2.1.11 Through-Wall Flashing

a. Electro-sheet copper not less than 5 ounces, factory coated both sides with acid- and alkali-resistant bituminous compound not less than 6 ounces per square foot or factory covered both sides with asphalt-saturated cotton fabric, asphalt saturated glass-fiber fabric, or with 40 pound reinforced kraft paper bonded with asphalt.

b. Stainless steel, Type 304, not less than 0.003 inch thick, completely encased by and permanently bonded on both sides to 50 pound high strength bituminized crepe kraft paper, using hot asphalt, heat, and pressure.

c. Nonreinforced, waterproof, impermeable extruded elastomeric single ply sheeting not less than 30 mils thick.

d. Three ounce copper sheet, with 2 mils of dense, clear, polyethylene sheet bonded to each side of the copper.

e. Other through-wall flashing material may be used provided the following performance criteria are met.

(1) No cracking or flaking when bent 180 degrees over a 1/32 inch mandrel and rebent at the same point over the same mandrel in an opposite direction at 32 degrees F.

(2) Water vapor permeability not more than 2 perms when tested in accordance with ASTM E 96.

(3) Minimum breaking strength of 90 pounds per inch width in the weakest direction when tested in accordance with ASTM D 828.

(4) No visible deterioration after being subjected to a 400-hour direct weathering test in accordance with ASTM D 822.

(5) No shrinkage in length or width and less than 5 percent loss of breaking strength after a 10-day immersion, per ASTM D 543, in 5 percent (by weight) solutions, respectively, of sulfuric acid, hydrochloric acid, sodium hydroxide or saturated lime (calcium hydroxide).

2.1.12 Louver Screen

Type I commercial bronzeorType III aluminum alloy insect screening conforming to ISWA IWS 089.

PART 3 EXECUTION

3.1 GENERAL REQUIREMENTS

Louvers shall be fabricated in conformance with SMACNA Arch. Manual and as indicated. Unless otherwise specified or indicated, exposed edges shall be folded back to form a 1/2 inch hem on the concealed side, and bottom edges of exposed vertical surfaces shall be angled to form drips. Bituminous cement shall not be placed in contact with roofing membranes other than built-up roofing.

3.2 EXPANSION JOINTS

Expansion joints shall be provided as specified in SMACNA Arch. Manual. Expansion joints in continuous sheet metal shall be provided at 40 foot intervals for copper and stainless steel and at 32 foot intervals for aluminum, . Joints shall be evenly spaced. An additional joint shall be provided where the distance between the last expansion joint and the end of the continuous run is more than half the required interval spacing.

3.3 PROTECTION OF ALUMINUM

Aluminum shall not be used where it will be in contact with copper or where it will contact water which flows over copper surfaces. Aluminum that will be in contact with wet or pressure-treated wood, mortar, concrete, masonry, or ferrous metals shall be protected against galvanic or corrosive action by one of the following methods:

3.3.1 Paint

Aluminum surfaces shall be solvent cleaned and given one coat of zinc-molybdate primer and one coat of aluminum paint as specified in Section 09900 PAINTS AND COATINGS.

3.3.2 Nonabsorptive Tape or Gasket

Nonabsorptive tape or gasket shall be placed between the adjoining surfaces and cemented to the aluminum surface using a cement compatible with aluminum.

3.4 CONNECTIONS AND JOINTING

3.4.1 Soldering

Soldering shall apply to copper, and stainless steel items. Edges of sheet metal shall be pretinned before soldering is begun. Soldering shall be done slowly with well heated soldering irons so as to thoroughly heat the seams and completely sweat the solder through the full width of the seam. Edges of stainless steel to be pretinned shall be treated with soldering acid flux. Soldering shall follow immediately after application of the flux. Upon completion of soldering, the acid flux residue shall be thoroughly cleaned from the sheet metal with a water solution of washing soda and rinsed with clean

water.

3.4.2 Riveting

Joints in aluminum sheets 0.040 inch or less in thickness shall be mechanically made.

3.4.3 Seaming

Flat-lock and soldered-lap seams shall finish not less than 1 inch wide. Unsoldered plain-lap seams shall lap not less than 3 inches unless otherwise specified. Flat seams shall be made in the direction of the flow.

3.5 CLEATS

A continuous cleat shall be provided where indicated or specified to secure loose edges of the sheet metalwork. Butt joints of cleats shall be spaced approximately 1/8 inch apart. The cleat shall be fastened to supporting wood construction with nails evenly spaced not over 12 inches on centers. Where the fastening is to be made to concrete or masonry, screws shall be used and shall be driven in expansion shields set in concrete or masonry.

3.6 GUTTERS AND DOWNSPOUTS

Gutters and downspouts shall be installed as indicated. Gutters shall be supported by continuous cleats or by cleats spaced not less than 36 inches apart. Downspouts shall be rigidly attached to the building. Supports for downspouts shall be spaced according to manufacturer's recommendations.

3.7 FLASHINGS

Flashings shall be installed at locations indicated and as specified below. Sealing shall be according to the flashing manufacturer's recommendations. Flashings shall be installed at intersections of roof with vertical surfaces and at projections through roof, except that flashing for heating and plumbing, including piping, roof, and floor drains, and for electrical conduit projections through roof or walls are specified in other sections. Except as otherwise indicated, counter flashings shall be provided over base flashings. Perforations in flashings made by masonry anchors shall be covered up by an application of bituminous plastic cement at the perforation. Flashing shall be installed on top of joint reinforcement. Flashing shall be formed to direct water to the outside of the system.

3.7.1 Through-Wall Flashing

Through-wall flashing includes sill, lintel, and spandrel flashing. The flashing shall be laid with a layer of mortar above and below the flashing so that the total thickness of the two layers of the mortar and flashing are the same thickness as the regular mortar joints. Flashing shall not extend further into the masonry backup wall than the first mortar joint. Joints in flashing shall be lapped and sealed. Flashing shall be one piece for lintels and sills.

3.7.1.1 Lintel Flashing

Lintel flashing shall extend the full length of lintel. Flashing shall extend through the wall one masonry course above the lintels and shall be bent down over the vertical leg of the outer steel lintel angle not less than 2 inches, or shall be applied over top of masonry and precast concrete lintels. Bedjoints of lintels at control joints shall be underlaid with sheet metal bond breaker.

3.7.1.2 Sill Flashing

Sill flashing shall extend the full width of the sill and not less than 4 inches

beyond ends of sill except at control joint where the flashing shall be terminated at the end of the sill.

3.8 INSTALLATION OF LOUVERS

Louvers shall be rigidly attached to the supporting construction. The installation shall be rain-tight. Louver screen shall be installed as indicated.

3.9 CONTRACTOR QUALITY CONTROL

The Contractor shall establish and maintain a quality control procedure for sheet metal used in conjunction with roofing to assure compliance of the installed sheet metalwork with the contract requirements. Any work found not to be in compliance with the contract shall be promptly removed and replaced or corrected in an approved manner. Quality control shall include, but not be limited to, the following:

a. Observation of environmental conditions; number and skill level of sheet metal workers; condition of substrate.

b. Verification of compliance of materials before, during, and after installation.

c. Inspection of sheet metalwork for proper size and thickness, fastening and joining, and proper installation.

The actual quality control observations and inspections shall be documented and a copy of the documentation furnished to the Contracting Officer at the end of each day.

-- End of Section --

SECTION TABLE OF CONTENTS

DIVISION 07 - THERMAL & MOISTURE PROTECTION

SECTION 07840A

FIRESTOPPING

08/00

PART 1 GENERAL

1.1 REFERENCES
1.2 SUBMITTALS
1.3 GENERAL REQUIREMENTS
1.4 STORAGE AND DELIVERY
1.5 INSTALLER QUALIFICATIONS
1.6 COORDINATION

PART 2 PRODUCTS

2.1 FIRESTOPPING MATERIALS
2.1.1 Fire Hazard Classification
2.1.2 Toxicity
2.1.3 Fire Resistance Rating
2.1.3.1 Through-Penetrations
2.1.3.2 Construction Joints and Gaps

PART 3 EXECUTION

3.1 PREPARATION
3.2 INSTALLATION
3.2.1 Insulated Pipes and Ducts
3.2.2 Fire Dampers
3.3 INSPECTION

-- End of Section Table of Contents --

SECTION 07840A

FIRESTOPPING
08/00

PART 1 GENERAL

1.1 REFERENCES

The publications listed below form a part of this specification to the extent referenced. The publications are referred to in the text by basic designation only.

AMERICAN SOCIETY FOR TESTING AND MATERIALS (ASTM)

ASTM E 84	(1999) Surface Burning Characteristics of Building Materials
ASTM E 119	(1998) Fire Tests of Building Construction and Materials
ASTM E 814	(1997) Fire Tests of Through-Penetration Fire Stops
ASTM E 1399	(1997) Cyclic Movement and Measuring the Minimum and Maximum Joint Widths of Architectural Joint Systems

UNDERWRITERS LABORATORIES (UL)

UL 723	(1996; Rev thru Dec 1998) Test for Surface Burning Characteristics of Building Materials
UL 1479	(1994; Rev thru Feb 1998) Fire Tests of Through-Penetration Firestops
UL 2079	(1998) Tests for Fire Resistance of Building Joint Systems
UL Fire Resist Dir	(1999) Fire Resistance Directory (2 Vol.)

1.2 SUBMITTALS

Government approval is required for submittals with a "G" designation; submittals not having a "G" designation are for information only. When used, a designation following the "G" designation identifies the office that will review the submittal for the Government. The following shall be submitted in accordance with Section 01330 SUBMITTAL PROCEDURES:

SD-02 Shop Drawings

Firestopping Materials; .

Detail drawings including manufacturer's descriptive data, typical details conforming to UL Fire Resist Dir or other details certified by another nationally recognized testing laboratory, installation instructions or UL listing details for a firestopping assembly in lieu of fire-test data or report. For those firestop applications for which

no UL tested system is available through a manufacturer, a manufacturer's engineering judgement, derived from similar UL system designs or other tests, shall be submitted for review and approval prior to installation. Submittal shall indicate the firestopping material to be provided for each type of application. When more than 5 penetrations or construction joints are to receive firestopping, drawings shall indicate location and type of application.

SD-07 Certificates

Firestopping Materials; .

Certificates attesting that firestopping material complies with the specified requirements. In lieu of certificates, drawings showing UL classified materials as part of a tested assembly may be provided. Drawings showing evidence of testing by an alternate nationally recognized independent laboratory may be substituted.

Installer Qualifications; .

Documentation of training and experience.

Inspection; .

Manufacturer's representative certification stating that firestopping work has been inspected and found to be applied according to the manufacturer's recommendations and the specified requirements.

1.3 GENERAL REQUIREMENTS

Firestopping shall consist of furnishing and installing tested and listed firestop systems, combination of materials, or devices to form an effective barrier against the spread of flame, smoke and gases, and maintain the integrity of fire resistance rated walls, partitions, floors, and ceiling-floor assemblies, including through-penetrations and construction joints and gaps. Through-penetrations include the annular space around pipes, tubes, conduit, wires, cables and vents. Construction joints include those used to accommodate expansion, contraction, wind, or seismic movement; firestopping material shall not interfere with the required movement of the joint. Gaps requiring firestopping include gaps between the curtain wall and the floor slab and between the top of the fire-rated walls and the roof or floor deck above.

1.4 STORAGE AND DELIVERY

Materials shall be delivered in the original unopened packages or containers showing name of the manufacturer and the brand name. Materials shall be stored off the ground and shall be protected from damage and exposure to elements. Damaged or deteriorated materials shall be removed from the site.

1.5 INSTALLER QUALIFICATIONS

The Contractor shall engage an experienced Installer who is certified, licensed, or otherwise qualified by the firestopping manufacturer as having the necessary staff, training, and a minimum of 3 years experience in the installation of manufacturer's products per specified requirements. A manufacturer's willingness to sell its firestopping products to the Contractor or to an installer engaged by the Contractor does not in itself confer qualification on the buyer. The Installer shall have been trained by a direct representative of the manufacturer (not distributor or agent) in the proper selection and installation procedures.

1.6 COORDINATION

The specified work shall be coordinated with other trades. Firestopping materials, at penetrations of pipes and ducts, shall be applied prior to insulating, unless insulation meets requirements specified for firestopping. Firestopping materials at building joints and construction gaps shall be applied prior to completion of enclosing walls or assemblies. Cast-in-place firestop devices shall be located and installed in place before concrete placement. Pipe, conduit or cable bundles shall be installed through cast-in-place device after concrete placement but before area is concealed or made inaccessible.

PART 2 PRODUCTS

2.1 FIRESTOPPING MATERIALS

Firestopping materials shall consist of commercially manufactured, asbestos-free products complying with the following minimum requirements:

2.1.1 Fire Hazard Classification

Material shall have a flame spread of 25 or less, and a smoke developed rating of 50 or less, when tested in accordance with ASTM E 84 or UL 723. Material shall be an approved firestopping material as listed in UL Fire Resist Dir or by a nationally recognized testing laboratory.

2.1.2 Toxicity

Material shall be nontoxic to humans at all stages of application.

2.1.3 Fire Resistance Rating

Firestopping will not be required to have a greater fire resistance rating than that of the assembly in which it is being placed.

2.1.3.1 Through-Penetrations

Firestopping materials for through-penetrations, as described in paragraph GENERAL REQUIREMENTS, shall provide "F" and "T" fire resistance ratings in accordance with ASTM E 814 or UL 1479. Fire resistance ratings shall be as follows:

a. Penetrations of Fire Resistance Rated Walls and Partitions: F Rating = Rating of wall or partition being penetrated.

b. Penetrations of Fire Resistance Rated Ceiling Assemblies : F Rating = 1 hour, T Rating = 1 hour.

2.1.3.2 Construction Joints and Gaps

Fire resistance ratings of construction joints, as described in paragraph GENERAL REQUIREMENTS, and gaps such as those between floor slabs or roof decks and curtain walls shall be the same as the construction in which they occur. Construction joints and gaps shall be provided with firestopping materials and systems that have been tested per ASTM E 119 or UL 2079 to meet the required fire resistance rating. Systems installed at construction joints shall meet the cycling requirements of ASTM E 1399 or UL 2079.

PART 3 EXECUTION

3.1 PREPARATION

Areas to receive firestopping shall be free of dirt, grease, oil, or loose materials which may affect the fitting or fire resistance of the firestopping system. For cast-in-place firestop devices, formwork or metal deck to receive

device prior to concrete placement shall be sound and capable of supporting device.

3.2 INSTALLATION

Firestopping material shall completely fill void spaces regardless of geometric configuration, subject to tolerance established by the manufacturer. Firestopping systems for filling floor voids 4 inches or more in any direction shall be capable of supporting the same load as the floor is designed to support or shall be protected by a permanent barrier to prevent loading or traffic in the firestopped area. Firestopping shall be installed in accordance with manufacturer's written instructions. Tested and listed firestop systems shall be provided in the following locations, except in floor slabs on grade:

a. Penetrations of duct, conduit, tubing, cable and pipe through through fire-resistance rated walls, partitions, and ceiling assemblies.

d. Gaps at perimeter of fire-resistance rated walls and partitions, such as between the top of the walls and the bottom of roof decks.

e. Construction joints in fire rated walls and partitions.

f. Other locations where required to maintain fire resistance rating of the construction.

3.2.1 Insulated Pipes and Ducts

Thermal insulation shall be cut and removed where pipes or ducts pass through firestopping, unless insulation meets requirements specified for firestopping. Thermal insulation shall be replaced with a material having equal thermal insulating and firestopping characteristics.

3.2.2 Fire Dampers

Fire dampers shall be installed and firestopped in accordance with Section 15895A AIR SUPPLY, DISTRIBUTION, VENTILATION, AND EXHAUST SYSTEM.

3.3 INSPECTION

Firestopped areas shall not be covered or enclosed until inspection is complete and approved. A manufacturer's representative shall inspect the applications initially to ensure adequate preparations (clean surfaces suitable for application, etc.) and periodically during the work to assure that the completed work has been accomplished according to the manufacturer's written instructions and the specified requirements.

-- End of Section --

SECTION TABLE OF CONTENTS

DIVISION 07 - THERMAL & MOISTURE PROTECTION

SECTION 07900A

JOINT SEALING

06/97

PART 1 GENERAL

1.1 REFERENCES
1.2 SUBMITTALS
1.3 ENVIRONMENTAL REQUIREMENTS
1.4 DELIVERY AND STORAGE

PART 2 PRODUCTS

2.1 BACKING
2.1.1 Rubber
2.1.2 Synthetic Rubber
2.2 BOND-BREAKER
2.3 PRIMER
2.4 CAULKING
2.5 SEALANT
2.5.1 LATEX
2.5.2 ELASTOMERIC
2.6 SOLVENTS AND CLEANING AGENTS

PART 3 EXECUTION

3.1 GENERAL
3.1.1 Surface Preparation
3.1.2 Concrete and Masonry Surfaces
3.1.3 Steel Surfaces
3.1.4 Aluminum Surfaces
3.1.5 Wood Surfaces
3.2 APPLICATION
3.2.1 Masking Tape
3.2.2 Backing
3.2.3 Bond-Breaker
3.2.4 Primer
3.2.5 Sealant
3.3 CLEANING

-- End of Section Table of Contents --

SECTION 07900A

JOINT SEALING
06/97

PART 1 GENERAL

1.1 REFERENCES

The publications listed below form a part of this specification to the extent referenced. The publications are referred to in the text by basic designation only.

AMERICAN SOCIETY FOR TESTING AND MATERIALS (ASTM)

ASTM C 509	(1994) Elastomeric Cellular Preformed Gasket and Sealing Material
ASTM C 570	(1995) Oil- and Resin-Base Caulking Compound for Building Construction
ASTM C 834	(1995) Latex Sealants
ASTM C 920	(1998) Elastomeric Joint Sealants
ASTM D 1056	(1998) Flexible Cellular Materials - Sponge or Expanded Rubber

1.2 SUBMITTALS

Government approval is required for submittals with a "G" designation; submittals not having a "G" designation are for information only. When used, a designation following the "G" designation identifies the office that will review the submittal for the Government. The following shall be submitted in accordance with Section 01330 SUBMITTAL PROCEDURES:

SD-03 Product Data

Backing; G-RE.

Bond-Breaker; G-RE.

Sealant; G-RE.

Manufacturer's descriptive data including storage requirements, shelf life, curing time, instructions for mixing and application, and primer data (if required). A copy of the Material Safety Data Sheet shall be provided for each solvent, primer or sealant material.

SD-07 Certificates

Sealant; .

Certificates of compliance stating that the materials conform to the specified requirements.

1.3 ENVIRONMENTAL REQUIREMENTS

The ambient temperature shall be within the limits of 40 to 90 degrees F when

the sealants are applied.

1.4 DELIVERY AND STORAGE

Materials shall be delivered to the job in the manufacturer's original unopened containers. The container label or accompanying data sheet shall include the following information as applicable: manufacturer, name of material, formula or specification number, lot number, color, date of manufacture, mixing instructions, shelf life, and curing time at the standard conditions for laboratory tests. Materials shall be handled and stored to prevent inclusion of foreign materials. Materials shall be stored at temperatures between40 and 90 degrees F unless otherwise specified by the manufacturer.

PART 2 PRODUCTS

2.1 BACKING

Backing shall be 25 to 33 percent oversize for closed cell and 40 to 50 percent oversize for open cell material, unless otherwise indicated.

2.1.1 Rubber

Cellular rubber sponge backing shall be ASTM D 1056,Type 1, open cell, Class B, Grade 0, round cross section.

2.1.2 Synthetic Rubber

Synthetic rubber backing shall be ASTM C 509, Option I, Type I preformed rods ortubes.

2.2 BOND-BREAKER

Bond-breaker shall be as recommended by the sealant manufacturer to prevent adhesion of the sealant to backing or to bottom of the joint.

2.3 PRIMER

Primer shall be non-staining type as recommended by sealant manufacturer for the application.

2.4 CAULKING

Oil- and resin-based caulking shall be ASTM C 570, Type 1, Use .

2.5 SEALANT

2.5.1 LATEX

Latex Sealant shall be ASTM C 834.

2.5.2 ELASTOMERIC

Elastomeric sealants shall conform to ASTM C 920 and the following:

a. Polyurethane sealant: Grade NS, Class 25, Use NT.

b. Silicone sealant: Type S, Grade NS, Class 25, Use NT, .

2.6 SOLVENTS AND CLEANING AGENTS

Solvents, cleaning agents, and accessory materials shall be provided as

recommended by the manufacturer.

PART 3 EXECUTION

3.1 GENERAL

3.1.1 Surface Preparation

The surfaces of joints to receive sealant or caulk shall be free of all frost, condensation and moisture. Oil, grease, dirt, chalk, particles of mortar, dust, loose rust, loose mill scale, and other foreign substances shall be removed from surfaces of joints to be in contact with the sealant. Oil and grease shall be removed with solvent and surfaces shall be wiped dry with clean cloths. For surface types not listed below, the sealant manufacturer shall be contacted for specific recommendations.

3.1.2 Concrete and Masonry Surfaces

Where surfaces have been treated with curing compounds, oil, or other such materials, the materials shall be removed by sandblasting or wire brushing. Laitance, efflorescence and loose mortar shall be removed from the joint cavity.

3.1.3 Steel Surfaces

Steel surfaces to be in contact with sealant shall be sandblasted or, if sandblasting would not be practical or would damage adjacent finish work, the metal shall be scraped and wire brushed to remove loose mill scale. Protective coatings on steel surfaces shall be removed by sandblasting or by a solvent that leaves no residue.

3.1.4 Aluminum Surfaces

Aluminum surfaces to be in contact with sealants shall be cleaned of temporary protective coatings. When masking tape is used for a protective cover, the tape and any residual adhesive shall be removed just prior to applying the sealant. Solvents used to remove protective coating shall be as recommended by the manufacturer of the aluminum work and shall be non-staining.

3.1.5 Wood Surfaces

Wood surfaces to be in contact with sealants shall be free of splinters and sawdust or other loose particles.

3.2 APPLICATION

3.2.1 Masking Tape

Masking tape shall be placed on the finish surface on one or both sides of a joint cavity to protect adjacent finish surfaces from primer or sealant smears. Masking tape shall be removed within 10 minutes after joint has been filled and tooled.

3.2.2 Backing

Backing shall be installed to provide the indicated sealant depth. The installation tool shall be shaped to avoid puncturing the backing.

3.2.3 Bond-Breaker

Bond-breaker shall be applied to fully cover the bottom of the joint without contaminating the sides where sealant adhesion is required.

3.2.4 Primer

Primer shall be used on concrete masonry units, wood, or other porous surfaces in accordance with instructions furnished with the sealant. Primer shall be applied to the joint surfaces to be sealed. Surfaces adjacent to joints shall not be primed.

3.2.5 Sealant

Sealant shall be used before expiration of shelf life. Multi-component sealants shall be mixed according to manufacturer's printed instructions. Sealant in guns shall be applied with a nozzle of proper size to fit the width of joint. Joints shall be sealed as detailed in the drawings. Sealant shall be forced into joints with sufficient pressure to expel air and fill the groove solidly. Sealant shall be installed to the indicated depth without displacing the backing. Unless otherwise indicated, specified, or recommended by the manufacturer, the installed sealant shall be dry tooled to produce a uniformly smooth surface free of wrinkles and to ensure full adhesion to the sides of the joint; the use of solvents, soapy water, etc., will not be allowed. Sealants shall be installed free of air pockets, foreign embedded matter, ridges and sags. Sealer shall be applied over the sealant when and as specified by the sealant manufacturer.

3.3 CLEANING

The surfaces adjoining the sealed joints shall be cleaned of smears and other soiling resulting from the sealant application as work progresses.

-- End of Section --

SECTION TABLE OF CONTENTS

DIVISION 08 - DOORS & WINDOWS

SECTION 08110

STEEL DOORS AND FRAMES

05/01

PART 1 GENERAL

1.1 REFERENCES
1.2 SUBMITTALS
1.3 DELIVERY, STORAGE, AND HANDLING

PART 2 PRODUCTS

2.1 STANDARD STEEL DOORS
2.1.1 Classification - Level, Performance, Model
2.1.1.1 Extra Heavy Duty Doors
2.2 INSULATION CORES
2.3 STANDARD STEEL FRAMES
2.3.1 Welded Frames
2.3.2 Knock-Down Frames
2.3.3 Stops and Beads
2.3.4 Anchors
2.3.4.1 Wall Anchors
2.3.4.2 Floor Anchors
2.4 FIRE DOORS AND FRAMES
2.4.1 Labels
2.5 WEATHERSTRIPPING
2.6 HARDWARE PREPARATION
2.7 FINISHES
2.7.1 Hot-Dip Zinc-Coated and Factory-Primed Finish
2.8 FABRICATION AND WORKMANSHIP
2.8.1 Grouted Frames

PART 3 EXECUTION

3.1 INSTALLATION
3.1.1 Frames
3.1.2 Doors
3.1.3 Fire Doors and Frames
3.2 PROTECTION
3.3 CLEANING

-- End of Section Table of Contents --

SECTION 08110

STEEL DOORS AND FRAMES

05/01

PART 1 GENERAL

1.1 REFERENCES

The publications listed below form a part of this specification to the extent referenced. The publications are referred to in the text by the basic designation only.

AMERICAN NATIONAL STANDARDS INSTITUTE (ANSI)

ANSI A250.6	(1997) Hardware on Standard Steel Doors (Reinforcement - Application)
ANSI A250.8	(1998) SDI-100 Recommended Specifications for Standard Steel Doors and Frames

AMERICAN SOCIETY FOR TESTING AND MATERIALS (ASTM)

ASTM A 653/A 653M	(2000) Steel Sheet, Zinc-Coated (Galvanized) or Zinc-Iron Alloy-Coated (Galvannealed) by the Hot-Dip Process
ASTM A 924/A 924M	(1999) General Requirements for Steel Sheet, Metallic-Coated by the Hot-Dip Process
ASTM C 578	(1995) Rigid, Cellular Polystyrene Thermal Insulation
ASTM C 591	(1994) Unfaced Preformed Rigid Cellular Polyisocyanurate Thermal Insulation
ASTM C 612	(1993) Mineral Fiber Block and Board Thermal Insulation
ASTM D 2863	(1997) Measuring the Minimum Oxygen Concentration to Support Candle-Like Combustion of Plastics (Oxygen Index)

DOOR AND HARDWARE INSTITUTE (DHI)

DHI A115	(1991) Steel Door Preparation Standards (Consisting of A115.1 through A115.6 and A115.12 through A115.18)

NATIONAL FIRE PROTECTION ASSOCIATION (NFPA)

NFPA 80	(1999) Fire Doors and Fire Windows
NFPA 252	(1999) Standard Methods of Fire Tests of Door Assemblies

STEEL DOOR INSTITUTE (SDOI)

SDI 105	(1998) Recommended Erection Instructions for Steel Frames
SDI 111-F	Recommended Existing Wall Anchors for Standard Steel Doors and Frames
SDI 113	(1979) Apparent Thermal Performance of STEEL DOOR and FRAME ASSEMBLIES

UNDERWRITERS LABORATORIES (UL)

UL 10B	(1997) Fire Tests of Door Assemblies

1.2 SUBMITTALS

Submit the following in accordance with Section 01330, "Submittal Procedures."

SD-02 Shop Drawings

Doors;

Frames;

Accessories

Weatherstripping

Show elevations, construction details, metal gages, hardware provisions, method of glazing, and installation details.

Schedule of doors;

Schedule of frames;

Submit door and frame locations.

SD-03 Product Data

Doors;

Frames;

Accessories

Weatherstripping

Submit manufacturer's descriptive literature for doors, frames, and accessories. Include data and details on door construction, panel (internal) reinforcement, insulation, and door edge construction. When "custom hollow metal doors" are provided in lieu of "standard steel doors," provide additional details and data sufficient for comparison to ANSI A250.8 requirements.

1.3 DELIVERY, STORAGE, AND HANDLING

Deliver doors, frames, and accessories undamaged and with protective wrappings or packaging. Strap knock-down frames in bundles. Provide temporary steel spreaders securely fastened to the bottom of each welded frame. Store doors and frames on platforms under cover in clean, dry, ventilated, and accessible locations, with 1/4 inch airspace between doors. Remove damp or wet packaging immediately and wipe affected surfaces dry. Replace damaged materials with new.

PART 2 PRODUCTS

2.1 STANDARD STEEL DOORS

ANSI A250.8, except as specified otherwise. Prepare doors to receive hardware specified in Section 08700, "Builders' Hardware." Undercut where indicated. Exterior doors shall have top edge closed flush and sealed to prevent water intrusion. Doors shall be 1 3/4 inches thick, unless otherwise indicated.

2.1.1 Classification - Level, Performance, Model

2.1.1.1 Extra Heavy Duty Doors

ANSI A250.8, Level 3, physical performance Level A, Model 1 with core construction as required by the manufacturer for interior doors and for indicated exterior doors, of size(s) and design(s) indicated. Where vertical stiffenercores are required, the space between the stiffeners shall be filled with mineral board insulation.

2.2 INSULATION CORES

Insulated cores shall be of type specified, and provide an apparent U-factor of .48 in accordance with SDI 113 and shall conform to:

a. Rigid Polyurethane Foam: ASTM C 591, Type 1 or 2, foamed-in-place or in board form, with oxygen index of not less than 22 percent when tested in accordance with ASTM D 2863; or

b. Rigid Polystyrene Foam Board: ASTM C 578, Type I or II; or

c. Mineral board: ASTM C 612, Type I.

2.3 STANDARD STEEL FRAMES

ANSI A250.8, except as otherwise specified. Form frames to sizes and shapes indicated, with welded corners or knock-down field-assembled corners. Provide steel frames for doors, cased openings, and interior glazed panels, unless otherwise indicated.

2.3.1 Welded Frames

Continuously weld frame faces at corner joints. Mechanically interlock or continuously weld stops and rabbets. Grind welds smooth.

2.3.2 Knock-Down Frames

Design corners for simple field assembly by concealed tenons, splice plates, or interlocking joints that produce square, rigid corners and a tight fit and maintain the alignment of adjoining members. Provide locknuts for bolted connections.

2.3.3 Stops and Beads

Form stops and beads from 20 gage steel. Provide for glazed and other openings in standard steel frames. Secure beads to frames with oval-head, countersunk Phillips self-tapping sheet metal screws or concealed clips and fasteners. Space fasteners approximately 12 to 16 inches on centers. Miter molded shapes at corners. Butt or miter square or rectangular beads at corners.

2.3.4 Anchors

Provide anchors to secure the frame to adjoining construction. Provide steel anchors, zinc-coated or painted with rust-inhibitive paint, not lighter than 18

gage.

2.3.4.1 Wall Anchors

Provide at least three anchors for each jamb. For frames which are more than 7.5 feet in height, provide one additional anchor for each jamb for each additional 2.5 feet or fraction thereof.

a. Masonry: Provide anchors of corrugated or perforated steel straps or 3/16 inch diameter steel wire, adjustable or T-shaped;

b. Stud partitions: Weld or otherwise securely fasten anchors to backs of frames. Design anchors to be fastened to closed steel studs with sheet metal screws, and to open steel studs by wiring or welding;

c. Completed openings: Secure frames to previously placed concrete or masonry with expansion bolts in accordance with SDI 111-F; and

2.3.4.2 Floor Anchors

Provide floor anchors drilled for 3/8 inch anchor bolts at bottom of each jamb member. Where floor fill occurs, terminate bottom of frames at the indicated finished floor levels and support by adjustable extension clips resting on and anchored to the structural slabs.

2.4 FIRE DOORS AND FRAMES

NFPA 80 and this specification. The requirements of NFPA 80 shall take precedence over details indicated or specified.

2.4.1 Labels

Fire doors and frames shall bear the label of Underwriters Laboratories (UL), Factory Mutual Engineering and Research (FM), or Warnock Hersey International (WHI) attesting to the rating required. Testing shall be in accordance with NFPA 252 or UL 10B. Labels shall be metal with raised letters, and shall bear the name or file number of the door and frame manufacturer. Labels shall be permanently affixed at the factory to frames and to the hinge edge of the door. Door labels shall not be painted.

2.5 WEATHERSTRIPPING

As specified in Section 08700, "Builders' Hardware."

2.6 HARDWARE PREPARATION

Provide minimum hardware reinforcing gages as specified in ANSI A250.6. Drill and tap doors and frames to receive finish hardware. Prepare doors and frames for hardware in accordance with the applicable requirements of ANSI A250.8 and ANSI A250.6. For additional requirements refer to DHI A115. Drill and tap for surface-applied hardware at the project site. Build additional reinforcing for surface-applied hardware into the door at the factory. Locate hardware in accordance with the requirements of ANSI A250.8, as applicable. Punch door frames , with the exception of frames that will have weatherstripping gasketing, to receive a minimum of two rubber or vinyl door silencers on lock side of single doors and one silencer for each leaf at heads of double doors. Set lock strikes out to provide clearance for silencers.

2.7 FINISHES

2.7.1 Hot-Dip Zinc-Coated and Factory-Primed Finish

Fabricate exterior doors and frames from hot dipped zinc coated steel, alloyed type, that complies with ASTM A 924/A 924M and ASTM A 653/A 653M. The Coating weight shall meet or exceed the minimum requirements for coatings having 0.4 ounces per square foot, total both sides, i.e., A40. Repair damaged zinc-coated surfaces by the application of zinc dust paint. Thoroughly clean and chemically treat to insure maximum paint adhesion. Factory prime as specified in ANSI A250.8. Provide for exterior doors .

2.8 FABRICATION AND WORKMANSHIP

Finished doors and frames shall be strong and rigid, neat in appearance, and free from defects, waves, scratches, cuts, dents, ridges, holes, warp, and buckle. Molded members shall be clean cut, straight, and true, with joints coped or mitered, well formed, and in true alignment. Dress exposed welded and soldered joints smooth. Design door frame sections for use with the wall construction indicated. Corner joints shall be well formed and in true alignment. Conceal fastenings where practicable. Design frames in exposed masonry walls or partitions to allow sufficient space between the inside back of trim and masonry to receive calking compound.

2.8.1 Grouted Frames

For frames to be installed in exterior walls and to be filled with mortar or grout, fill the stops with strips of rigid insulation to keep the grout out of the stops and to facilitate installation of stop-applied head and jamb seals.

PART 3 EXECUTION

3.1 INSTALLATION

3.1.1 Frames

Set frames in accordance with SDI 105. Plumb, align, and brace securely until permanent anchors are set. Anchor bottoms of frames with expansion bolts or powder-actuated fasteners. Build in or secure wall anchors to adjoining construction.

3.1.2 Doors

Hang doors in accordance with clearances specified in ANSI A250.8. After erection and glazing, clean and adjust hardware.

3.1.3 Fire Doors and Frames

Install fire doors and frames, including hardware, in accordance with NFPA 80.

3.2 PROTECTION

Protect doors and frames from damage. Repair damaged doors and frames prior to completion and acceptance of the project or replace with new, as directed. Wire brush rusted frames until rust is removed. Clean thoroughly. Apply an all-over coat of rust-inhibitive paint of the same type used for shop coat.

3.3 CLEANING

Upon completion, clean exposed surfaces of doors and frames thoroughly. Remove mastic smears and other unsightly marks.

-- End of Section --

SECTION TABLE OF CONTENTS

DIVISION 08 - DOORS & WINDOWS

SECTION 08210

WOOD DOORS

08/00

PART 1 GENERAL

1.1 REFERENCES
1.2 GENERAL REQUIREMENTS
1.2.1 Standard Products
1.2.2 Marking
1.3 SUBMITTALS
1.4 STORAGE
1.5 HARDWARE
1.6 GLAZING
1.7 WARRANTY

PART 2 PRODUCTS

2.1 GENERAL FABRICATION REQUIREMENTS
2.1.1 Edge Sealing
2.1.2 Adhesives
2.1.3 Prefitting
2.2 FLUSH DOORS
2.2.1 Core Construction
2.2.1.1 Solid Cores
2.2.2 Face Panels
2.2.2.1 Wood Veneer Doors
2.2.3 Sliding Closet Doors
2.3 FIRE RATED DOORS
2.3.1 Reinforcement Blocking
2.3.2 Stile Edges

PART 3 EXECUTION

3.1 INSTALLATION OF DOORS
3.1.1 General Use Doors
3.1.2 Fire Doors
3.2 FIELD FINISHING

-- End of Section Table of Contents --

SECTION 08210

WOOD DOORS
08/00

PART 1 GENERAL

1.1 REFERENCES

The publications listed below form a part of this specification to the extent referenced. The publications are referred to in the text by basic designation only.

NATIONAL FIRE PROTECTION ASSOCIATION (NFPA)

NFPA 80	(1999) Fire Doors and Fire Windows
NFPA 101	(2000) Life Safety Code
NFPA 252	(1999) Fire Tests of Door Assemblies

NATIONAL WOOD WINDOW & DOOR ASSOCIATION (NWWDA)

NWWDA I.S. 1-A	(1997) Architectural Wood Flush Doors

1.2 GENERAL REQUIREMENTS

1.2.1 Standard Products

Doors shall be of the type, size, and design indicated on the drawings, and shall be the standard products of manufacturers regularly engaged in the manufacture of wood doors.

1.2.2 Marking

Each door shall bear a stamp, brand, or other identifying mark indicating quality and construction of the door. The identifying mark or a separate certification shall include identification of the standard on which construction of the door is based, identity of the manufacturing plant, identification of the standard under which preservative treatment, if used, was made, and identification of the doors having a Type I glue bond.

1.3 SUBMITTALS

Government approval is required for submittals with a "G" designation; submittals not having a "G" designation are for information only. When used, a designation following the "G" designation identifies the office that will review the submittal for the Government. The following shall be submitted in accordance with Section 01330 SUBMITTAL PROCEDURES:

SD-02 Shop Drawings

Wood Doors and Frames.

Drawings indicating the location of each door, elevation of each

type of door, details of construction, marks to be used to identify the doors, and location and extent of hardware blocking. Drawings shall include catalog cuts or descriptive data for doors, weatherstripping, flashing, and thresholds to be used.

Fire Doors.

Manufacturers preprinted installation and touch-up instructions.

SD-04 Samples

Field Finishing; G-AE

Three samples of field applied finish.

SD-07 Certificates

Fire Rated Doors.
Adhesives.

Certificates for oversize fire doors and/or door/frame assemblies stating that the doors are identical in design, materials, and construction to a door that has been tested and meets the requirements for the class indicated. Certificate stating that adhesives used for proposed doors do not contain any formaldehyde.

1.4 STORAGE

Doors shall be stored in fully covered areas and protected from damage and from extremes in temperature and humidity. Doors shall be stored on supports to prevent warping or twisting, and to provide ventilation. Factory cartons or wrappers shall be kept intact until installation.

1.5 HARDWARE

Hardware, including weatherstripping and thresholds, is specified in Section 08700 BUILDERS' HARDWARE.

1.6 GLAZING

Glazing is specified in Section 08810a GLASS AND GLAZING.

1.7 WARRANTY

Manufacturer's standard performance guarantees or warranties that extend beyond a 1 year period shall be provided.

PART 2 PRODUCTS

2.1 GENERAL FABRICATION REQUIREMENTS

2.1.1 Edge Sealing

Wood end-grain exposed at edges of doors shall be sealed prior to shipment.

2.1.2 Adhesives

Adhesives shall be in accordance with NWWDA I.S. 1-A, requirements for Type

I Bond Doors (waterproof) for exterior doors and requirements for Type II Bond Doors (water-repellent) for interior doors. Adhesive for doors to receive a transparent finish shall be nonstaining. Adhesives shall contain no formaldehydes.

2.1.3 Prefitting

Doors shall be furnished prefitted or unfitted at the option of the Contractor.

2.2 FLUSH DOORS

Flush doors shall be solid core and shall conform to NWWDA I.S. 1-A, except for the one year acclimatization requirement in paragraph T-2, which shall not apply. Wood doors shall be 5-ply or 7-ply construction with faces, stiles, and rails bonded to the cores.

2.2.1 Core Construction

2.2.1.1 Solid Cores

Door construction shall be glued wood block core

2.2.2 Face Panels

2.2.2.1 Wood Veneer Doors

Veneer doors to receive finish shall be Premium Grade, book matched red oak veneer in accordance with NWWDA I.S. 1-A. Vertical stile strips shall be selected to provide edges of the same species and/or color as the face veneer. Door finish shall be in accordance with paragraph FINISHING.

2.2.3 Sliding Closet Doors

Flush doors shall conform to NWWDA I.S. 1-A. Doors shall be 1-3/8 inch thick. Doors shall be equipped with the manufacturer's standard hardware.

2.3 FIRE RATED DOORS

Fire rated door assemblies shall bear the listing identification label of a nationally recognized testing laboratory qualified to perform tests of fire door assemblies in accordance with NFPA 252 and having a listing for the tested assemblies. The specific time interval rating on the labels shall be as shown. Door assemblies shall be in accordance with NFPA 80. Listing identification on labels shall be constructed and permanently applied by a method which results in their destruction should they be removed. Fire rated doors shall be mineral core.

2.3.1 Reinforcement Blocking

Fire rated doors shall be provided, as required, with hardware reinforcement blocking, and top, bottom, and intermediate rail blocking. Lock blocks shall be manufacturer's standard. Reinforcement blocking shall be in compliance with the manufacturer's labeling requirements. Reinforcement blocking shall not be of mineral material.

2.3.2 Stile Edges

Composite fire rated doors shall be provided with vertical stile edges that

do not contain fire retardant salts. Vertical stiles shall be of the same species and/or color as the face veneer.

PART 3 EXECUTION

3.1 INSTALLATION OF DOORS

3.1.1 General Use Doors

Doors shall be fit, hung, and trimmed as required. Door shall have a clearance of 1/8 inch at the sides and top and shall have a bottom clearance of 1/4 inch over thresholds and 1/2 inch at other locations unless otherwise shown. The lock edge or both edges of doors shall be beveled at the rate of 1/8 inch in 2 inches. Cuts made on the job shall be sealed immediately after cutting, using a clear varnish or sealer. Bottom of doors shall be undercut to allow clear door swing over carpeted areas. Vertical edges of doors which have not been rounded or beveled at the factory shall be eased when the doors are installed.

3.1.2 Fire Doors

Installation, hardware, and operational characteristics shall conform to NFPA 80 and NFPA 101 and shall be in strict conformance with the manufacturer's printed instructions. Properly sized pilot holes shall be drilled for screws in door edges. Factory applied labels shall remain intact where installed. Labeled hinge stile edge and top edge of door shall not be trimmed. Lockstile edge and bottom edge may be trimmed only to the extent recommended by the door manufacturer.

3.2 FIELD FINISHING

Doors to receive field finishing shall be factory primed or sealed, as required, and then shall be finished in accordance with Section 09900 PAINTS AND COATINGS. Factory applied sealer shall not prevent doors from accepting field stain and finish. Color shall be in accordance with Section 09915 COLOR SCHEDULE. Field touch-up of factory finishes shall be in accordance with manufacturers instructions.

-- End of Section --

SECTION TABLE OF CONTENTS

DIVISION 08 - DOORS & WINDOWS

SECTION 08520A

ALUMINUM AND ENVIRONMENTAL CONTROL ALUMINUM WINDOWS

03/00

PART 1 GENERAL

1.1 REFERENCES
1.2 WINDOW PERFORMANCE
1.2.1 Structural Performance
1.2.2 Air Infiltration
1.2.3 Water Penetration
1.2.4 Thermal Performance
1.2.5 Condensation Index Rating
1.2.6 Life Safety Criteria
1.3 SUBMITTALS
1.4 QUALIFICATION
1.5 MOCK-UPS
1.6 DELIVERY AND STORAGE
1.7 WARRANTY

PART 2 PRODUCTS

2.1 ALUMINUM WINDOW TYPES
2.1.1 Casement Windows
2.1.2 Fixed Windows
2.2 WEATHERSTRIPPING
2.3 INSECT SCREENS
2.4 ACCESSORIES
2.4.1 Fasteners
2.4.2 Hardware
2.4.3 Window Anchors
2.5 GLASS AND GLAZING
2.6 FINISH
2.6.1 Anodized Aluminum Finish

PART 3 EXECUTION

3.1 INSTALLATION
3.2 ADJUSTMENTS AND CLEANING
3.2.1 Hardware Adjustments
3.2.2 Cleaning

-- End of Section Table of Contents --

SECTION 08520A

ALUMINUM AND ENVIRONMENTAL CONTROL ALUMINUM WINDOWS
03/00

PART 1 GENERAL

1.1 REFERENCES

The publications listed below form a part of this specification to the extent referenced. The publications are referred to in the text by basic designation only.

ALUMINUM ASSOCIATION (AA)

AA DAF-45	(1997) Designation System for Aluminum Finishes

AMERICAN ARCHITECTURAL MANUFACTURERS ASSOCIATION (AAMA)

AAMA 101	(1997) Voluntary Specifications for Aluminum, Vinyl (PVC) and Wood Windows and Glass Doors

AMERICAN SOCIETY FOR TESTING AND MATERIALS (ASTM)

ASTM E 283	(1991) Determining the Rate of Air Leakage Through Exterior Windows, Curtain Walls, and Doors Under Specified Pressure Differences Across the Specimen
ASTM E 330	(1997el) Structural Performance of Exterior Windows, Curtain Walls, and Doors by Uniform Static Air Pressure Difference
ASTM E 547	(1996) Water Penetration of Exterior Windows, Curtain Walls, and Doors by Cyclic Static Air Pressure Differential

INSECT SCREENING WEAVERS ASSOCIATION (ISWA)

ISWA IWS 089	(1990) Recommended Standards and Specifications for Insect Wire Screening (Wire Fabric)

NATIONAL FENESTRATION RATING COUNCIL (NFRC)

NFRC 100	(1997) Procedure for Determing Fenestration Product U-factors
NFRC 200	(1997) Procedure for Determining Fenestration Product Solar Heat Gain Coefficients at Normal Incidence

NATIONAL FIRE PROTECTION ASSOCIATION (NFPA)

NFPA 101	(1997; Errata 97-1; TIA-97-1) Life Safety Code

SCREEN MANUFACTURERS ASSOCIATION (SMA)

SMA ANSI/SMA 1004 (1987) Aluminum Tubular Frame Screens for Windows

1.2 WINDOW PERFORMANCE

Aluminum windows shall meet the following performance requirements. Testing requirements shall be performed by an independent testing laboratory or agency.

1.2.1 Structural Performance

Structural test pressures on window units shall be for positive load (inward) and negative load (outward) in accordance with ASTM E 330. After testing, there shall be no glass breakage, permanent damage to fasteners, hardware parts, support arms or actuating mechanisms or any other damage which could cause window to be inoperable. There shall be no permanent deformation of any main frame, sash or ventilator member in excess of the requirements established by AAMA 101 for the window types and classification specified in this section.

1.2.2 Air Infiltration

Air infiltration shall not exceed the amount established by AAMA 101 for each window type when tested in accordance with ASTM E 283.

1.2.3 Water Penetration

Water penetration shall not exceed the amount established by AAMA 101 for each window type when tested in accordance with ASTM E 547.

1.2.4 Thermal Performance

Thermal transmittance for thermally broken aluminum windows with insulating glass shall not exceed a U-factor of 0.75 Btu/hr-ft^2-F determined according to NFRC 100, and a solar heat gain coefficient (SHGC) of 0.40 Btu/hr-ft^2-F determined according to NFRC 200. Window units shall comply with the U.S. Department of Energy, Energy Star Window Program for the Southern Climate Zone. 0.40 Btu/hr-ft^2-F determined according to NFRC 100, and a solar heat gain coefficient (SHGC) of0.55 Btu/hr-ft^2-F determined according to NFRC 200. Window units shall comply with the U.S. Department of Energy, Energy Star Window Program for the Central Climate Zone.

1.2.5 Condensation Index Rating

The condensation index rating shall be 85 as determined using NFRC approved software THERM.

1.2.6 Life Safety Criteria

Windows shall conform to NFPA 101 Life Safety Code when rescue and/or second means of escape are indicated.

1.3 SUBMITTALS

Government approval is required for submittals with a "G" designation; submittals not having a "G" designation are for information only. When used, a designation following the "G" designation identifies the office that will review the submittal for the Government. The following shall be submitted in accordance with Section 01330 SUBMITTAL PROCEDURES:

SD-02 Shop Drawings

Aluminum Windows; G-AE

Insect Screens; G-AE

Drawings indicating elevations of window, rough-opening dimensions for each type and size of window, full-size sections, thicknesses of metal, fastenings, methods of installation and anchorage, connections with other work, type of wall construction, size and spacing of anchors, method of glazing, types and locations of operating hardware, mullion details, weatherstripping details, screen details including method of attachment, and window schedules showing locations of each window type.

SD-03 Product Data

Aluminum Windows; G-AE

Manufacturer's descriptive data and catalog cut sheets.

Manufacturer's preprinted installation instructions and cleaning instructions.

SD-04 Samples

Aluminum Windows; G-AE

Manufacturer's standard color samples of the specified finishes.

SD-06 Test Reports

Aluminum Windows; G-AE

Reports for each type of aluminum window attesting that identical windows have been tested and meet all performance requirements established under paragraph WINDOW PERFORMANCE.

SD-07 Certificates

Aluminum Windows;

Certificates stating that the aluminum windows are AAMA certified conforming to requirements of this section. Labels or markings permanently affixed to the window will be accepted in lieu of certificates. Product ratings determined using NFRC 100 and NFRC 200 shall be authorized for certification and properly labeled by the manufacturer.

1.4 QUALIFICATION

Window manufacturer shall specialize in designing and manufacturing the type of aluminum windows specified in this section, and shall have a minimum of 5 years of documented successful experience. Manufacturer shall have the facilities capable of meeting contract requirements, single-source responsibility and warranty.

1.5 MOCK-UPS

Before fabrication, full-size mock-up of each type of aluminum window complete with glass and AAMA certification label for structural purposes and NFRC Temporary and Permanent Label for certification of thermal performance raiting will be required for review of window construction and quality of hardware operation.

1.6 DELIVERY AND STORAGE

Aluminum windows shall be delivered to project site and stored in accordance with manufacturer's recommendations. Damaged windows shall be replaced with new windows.

1.7 WARRANTY

Manufacturer's standard performance guarantees or warranties that extend beyond a 1 year period shall be provided.

PART 2 PRODUCTS

2.1 ALUMINUM WINDOW TYPES

Aluminum windows shall consist of complete units including sash, glass, frame, weatherstripping, screens, and hardware. Windows shall conform to AAMA 101. Windows shall be thermal break type double-glazed. Thermal barrier shall be neoprene, rigid vinyl, or polyurethane and shall be resistant to weather. Window members shall be heli-arc welded or angle-reinforced and mechanically joined and sealed. Exposed welded joints shall be dressed and finished. Joints shall be permanent and weathertight. Frames shall be constructed to provide a minimum 1/4 inch thermal break between the exterior and interior frame surfaces. Sash corners shall be internally sealed to prevent air and water leaks. Inner sash shall be key-controlled to swing to the interior to allow maintenance and replacement of the glass. Not less than 2control keys shall be furnished. Operable windows shall permit cleaning the outside glass from inside the building.

2.1.1 Casement Windows

Aluminum casement (C) windows shall conform to AAMA 101 Designation C-HC40 type with ventilators which swing on side jamb. Hinges shall be butt (close-up) type. Operators shall be as required for hinge type. Keyed locking devices shall be provided to secure ventilators tightly in the frame in the closed position.

2.1.2 Fixed Windows

Aluminum fixed (F) windows shall conform to AAMA 101 F-HC40 type, non-operable glazed frame, complete with provisions for reglazing in the field.

2.2 WEATHERSTRIPPING

Weatherstripping for ventilating sections shall be of type designed to meet water penetration and air infiltration requirements specified in this section in accordance with AAMA 101, and shall be manufactured of material compatible with aluminum and resistant to weather. Weatherstrips shall be factory-applied and easily replaced in the field. Neoprene or polyvinylchloride weatherstripping are not acceptable where exposed to direct sunlight.

2.3 INSECT SCREENS

Insect screens shall be aluminum window manufacturer's standard design, and shall be provided where scheduled on drawings. Insect screens shall be fabricated of roll-formed tubular-shaped. Roll-formed tubular shaped stainless steel frames conforming to SMA ANSI/SMA 1004 and (18 x 16) bronze mesh screening conforming with ISWA IWS 089, Type I.

2.4 ACCESSORIES

2.4.1 Fasteners

Fastening devices shall be window manufacturer's standard design made from

aluminum, non-magnetic stainless steel, cadmium-plated steel, nickel/chrome-plated steel in compliance with AAMA 101. Self-tapping sheet metal screws will not be acceptable for material thicker than 1/16 inch.

2.4.2 Hardware

Hardware shall be as specified for each window type and shall be fabricated of aluminum, stainless steel, cadmium-plated steel, zinc-plated steel or nickel/chrome-plated steel in accordance with requirements established by AAMA 101.

2.4.3 Window Anchors

Anchoring devices for installing windows shall be made of aluminum, cadmium-plated steel, stainless steel, or zinc-plated steel conforming to AAMA 101.

2.5 GLASS AND GLAZING

Aluminum windows shall be designed for inside glazing, field glazing, and for glass types scheduled on drawings and specified in Section 08810a GLASS AND GLAZING. Units shall be complete with glass and glazing provisions to meet AAMA 101. Glazing material shall be compatible with aluminum, and shall not require painting.

2.6 FINISH

2.6.1 Anodized Aluminum Finish

Exposed surfaces of aluminum windows shall be finished with anodic coating conforming to AA DAF-45: Architectural Class II, AA-M10-C22-A31, clear anodic coating, 0.4 to 0.7 mil thick, 204-R1 Natural ColorArchitectural Class I, AA-M10-C22-A44, color anodic coating, 0.7 mil or thicker. Finish shall be free of scratches and other blemishes.

PART 3 EXECUTION

3.1 INSTALLATION

Aluminum windows shall be installed in accordance with approved shop drawings and manufacturer's published instructions. Aluminum surfaces in contact with masonry, concrete, wood and dissimilar metals other than stainless steel, zinc, cadmium or small areas of white bronze, shall be protected from direct contact using protective materials recommended by AAMA 101. The completed window installation shall be watertight in accordance with Section 07900a JOINT SEALING. Glass and glazing shall be installed in accordance with requirements of this section and Section 08810a GLASS AND GLAZING.

3.2 ADJUSTMENTS AND CLEANING

3.2.1 Hardware Adjustments

Final operating adjustments shall be made after glazing work is complete. Operating sash or ventilators shall operate smoothly and shall be weathertight when in locked position.

3.2.2 Cleaning

Aluminum window finish and glass shall be cleaned on exterior and interior sides in accordance with window manufacturer's recommendations. Alkaline or abrasive agents shall not be used. Precautions shall be taken to avoid scratching or marring window finish and glass surfaces.

-- End of Section --

SECTION TABLE OF CONTENTS

DIVISION 08 - DOORS & WINDOWS

SECTION 08700

BUILDERS' HARDWARE

03/96

PART 1 GENERAL

1.1 REFERENCES
1.2 SUBMITTALS
1.3 PREDELIVERY CONFERENCE
1.4 DELIVERY, STORAGE, AND HANDLING
1.5 SPECIAL TOOLS
1.6 WARRANTY
1.7 OPERATION AND MAINTENANCE MANUALS

PART 2 PRODUCTS

2.1 GENERAL HARDWARE REQUIREMENTS
2.2 TEMPLATES
2.3 HINGES
2.3.1 Hinges for Reverse Bevel Doors with Locks
2.3.2 Contractor's Option
2.4 LOCKS AND LATCHES
2.4.1 Mortise Lock and Latchsets
2.4.2 Electro-Mechanical Locks
2.4.3 Auxiliary Locks and Associated Products
2.4.4 Lock Cylinders (Mortise)
2.4.5 Push/Pull Latches
2.4.6 Lock Trim
2.4.7 Electromagnetic Locks
2.5 EXIT DEVICES AND EXIT DEVICE ACCESSORIES
2.5.1 Exit Devices and Auxiliary Items
2.6 KEYING
2.7 DOOR CLOSING DEVICES
2.7.1 Surface Type Closers
2.8 DOOR CONTROLS - OVERHEAD HOLDERS
2.9 ARCHITECTURAL DOOR TRIM
2.9.1 Door Protection Plates
2.9.2 Push Plates
2.9.2.1 Flat Plates
2.9.3 Door Pulls
2.10 AUXILIARY HARDWARE
2.11 MISCELLANEOUS
2.11.1 Automatic Door Bottoms
2.11.2 Metal Thresholds
2.11.3 Aluminum Housed Type Weatherseals
2.11.4 Door Stops
2.12 FASTENINGS
2.13 FINISHES
2.14 HARDWARE FOR FIRE DOORS

PART 3 EXECUTION

3.1 APPLICATION
3.1.1 Hardware for Fire Doors Assemblies

3.1.2 Door-Closing Devices
3.1.3 Auxiliary Hardware
3.1.4 Thresholds
3.1.5 Weatherseals
3.1.6 Gasketing
3.2 OPERATIONAL TESTS
3.3 FIELD QUALITY CONTROL
3.4 HARDWARE SETS

-- End of Section Table of Contents --

SECTION 08700

BUILDERS' HARDWARE
03/96

PART 1 GENERAL

1.1 REFERENCES

The publications listed below form a part of this specification to the extent referenced. The publications are referred to in the text by basic designation only.

AMERICAN SOCIETY FOR TESTING AND MATERIALS (ASTM)

ASTM E 283	(1991) Determining the Rate of Air Leakage Through Exterior Windows, Curtain Walls and Doors Under Specified Pressure Differences Across the Specimen

BUILDERS HARDWARE MANUFACTURERS ASSOCIATION (BHMA)

BHMA L & R Directory	(Effective thru Jun 1999) Directory of Certified Locks & Latches
BHMA Closer Directory	(Effective thru Jul (1999) Directory of Certified Door Closers
BHMA Exit Devices Directory	(Effective thru Aug 1998) Directory of Certified Exit Devices
BHMA A156.1	(1997) Butts and Hinges
BHMA A156.2	(1996) Bored and Preassembled Locks and Latches
BHMA A156.3	(1994) Exit Devices
BHMA A156.4	(1992) Door Controls - Closers
BHMA A156.5	(1992) Auxiliary Locks & Associated Products
BHMA A156.6	(1994) Architectural Door Trim
BHMA A156.7	(1997) Template Hinge Dimensions
BHMA A156.8	(1994) Door Controls - Overhead Stops and Holders
BHMA A156.13	(1994) Mortise Locks & Latches
BHMA A156.16	(1989) Auxiliary Hardware
BHMA A156.18	(1993) Materials and Finishes
BHMA A156.21	(1996) Thresholds
BHMA A156.23	(1992) Electromagnetic Locks

DOOR AND HARDWARE INSTITUTE (DHI)

DHI Keying Systems	(1989) Keying Systems and Nomenclature
DHI Locations for CSD	(1997) Recommended Locations for Builders' Hardware for Custom Steel Doors and Frames
DHI Locations for SSD	(1990) Recommended Locations for Architectural Hardware for Standard Steel Doors and Frames
DHI ANSI/DHI A115.1G	(1994) Installation Guide for Doors and Hardware
DHI ANSI/DHI A115-W	(Varies) Wood Door Hardware Standards (Incl All5-W1 thru A115-W9)

NATIONAL FIRE PROTECTION ASSOCIATION (NFPA)

NFPA 80	(1999) Fire Doors and Fire Windows
NFPA 101	(1997; Errata 97-1; TIA-97-1) Life Safety Code

1.2 SUBMITTALS

Government approval is required for submittals with a "G" designation; submittals not having a "G" designation are for information only. When used, a designation following the "G" designation identifies the office that will review the submittal for the Government. The following shall be submitted in accordance with Section 01330 SUBMITTAL PROCEDURES:

SD-02 Shop Drawings

Exit Devices;
Drawings;

Detail drawings for hardware devices for computerized keying systems, magnetic cards, keyless push button access control systems, and other electrical hardware devices showing complete wiring and schematic diagrams and other details required to demonstrate proper function of units.

Detail drawings for hardware devices for computerized keying systems, magnetic cards, keyless push button access control systems, and other electrical hardware devices showing complete wiring and schematic diagrams and other details required to demonstrate proper function of units.

SD-03 Product Data

Exit Device Accessories;

Manufacturer's descriptive data, technical literature, catalog cuts, and installation instructions. Spare parts data for locksets, exit devices, closers, after approval of the detail drawings, and not later than 3 month(s) prior to the date of beneficial occupancy. The data shall include a complete list of parts and supplies, with current unit prices and source of supply.

Hardware Schedule;

Hardware schedule listing all items to be furnished. The schedule shall include for each item: the quantities; manufacturer's name and

catalog numbers; the ANSI number specified, sizes; detail information or catalog cuts; finishes; door and frame size and materials; location and hardware set identification cross-references to drawings; corresponding reference standard type number or function number from manufacturer's catalog if not covered by ANSI or BHMA; and list of abbreviations and template numbers.

Keying;

Keying schedule developed in accordance with DHI Keying Systems, after the keying meeting with the user.

SD-07 Certificates

Hardware and Accessories;

The hardware manufacturer's certificates of compliance stating that the supplied material or hardware item meets specified requirements. Each certificate shall be signed by an official authorized to certify in behalf of the product manufacturer and shall identify quantity and date or dates of shipment or delivery to which the certificates apply. A statement that the proposed hardware items appear in BHMA L & R Directory, BHMA Closer Directory and BHMA Exit Devices Directory directories of certified products may be submitted in lieu of certificates.

1.3 PREDELIVERY CONFERENCE

Upon approval of the Hardware Schedule, the construction Contractor shall arrange a conference with the hardware supplier, Contracting Officer and the using agency to determine keying system requirements. Location of the key control storage system, set-up and key identification labeling will also be determined.

1.4 DELIVERY, STORAGE, AND HANDLING

Hardware shall be delivered to the project site in the manufacturer's original packages. Each article of hardware shall be individually packaged in the manufacturer's standard commercial carton or container, and shall be properly marked or labeled to be readily identifiable with the approved hardware schedule. Each change key shall be tagged or otherwise identified with the door for which its cylinder is intended. Where double cylinder functions are used or where it is not obvious which is the key side of a door, appropriate instructions shall be included with the lock and on the hardware schedule. Manufacturer's printed installation instructions, fasteners, and special tools shall be included in each package.

1.5 SPECIAL TOOLS

Special tools, such as those supplied by the manufacturer, unique wrenches, and dogging keys, shall be provided as required to adjust hardware items.

1.6 WARRANTY

Manufacturer's standard performance guarantees or warranties that extend beyond a one year period shall be provided.

1.7 OPERATION AND MAINTENANCE MANUALS

Six complete copies of maintenance instructions listing routine maintenance procedures, possible breakdowns and repairs, and troubleshooting guides shall be provided. The instructions for electric locks, electric strikes, electro-magnetic closer holder release devices, and electric exit devices shall

include simplified diagrams as installed.

PART 2 PRODUCTS

2.1 GENERAL HARDWARE REQUIREMENTS

Hardware shall conform to the requirements specified herein and the HARDWARE SETS listing at the end of this section. Hardware set numbers correspond to the set numbers shown on the drawings.

2.2 TEMPLATES

Requirements for hardware to be mounted on metal doors or metal frames shall be coordinated between hardware manufacturer and door or frame manufacturer by use of templates and other information to establish location, reinforcement required, size of holes, and similar details. Templates of hinges shall conform to BHMA A156.7.

2.3 HINGES

Hinges shall conform to BHMA A156.1. Hinges used on metal doors and frames shall also conform to BHMA A156.7. Except as otherwise specified, hinge sizes shall conform to the hinge manufacturer's printed recommendations.

2.3.1 Hinges for Reverse Bevel Doors with Locks

Hinges for reverse bevel doors with locks shall have pins that are made nonremovable by means such as a set screw in the barrel, or safety stud, when the door is in the closed position.

2.3.2 Contractor's Option

Hinges with antifriction bearings may be furnished in lieu of ball bearing hinges, except where prohibited for fire doors by the requirements of NFPA 80.

2.4 LOCKS AND LATCHES

To the maximum extent possible, locksets, latchsets and deadlocks, and all components thereof, including cylinders and removable cores, shall be the products of a single manufacturer. Lock fronts for double-acting doors shall be rounded. Strikes for wood frames and pairs of wood doors shall be furnished with wrought boxes.

2.4.1 Mortise Lock and Latchsets

Mortise lock, latchsets, and strikes shall be series 1000 and shall conform to BHMA A156.13, operational Grade 1. Mortise type locks and latches for doors 1-3/4 inches thick and over shall have adjustable bevel fronts or otherwise conform to the shape of the door. Mortise locks shall have armored fronts.

2.4.2 Electro-Mechanical Locks

Electro-mechanical locks shall allow for unlocking of doors from a remote location by means of push buttons. Locks shall be fail safe mode (unlocked when power is off). Locks shall be mortise series conforming to BHMA A156.13 and bored series conforming to BHMA A156.2 with factory installed electric lock modification or manufactured electro-mechanical locks conforming to BHMA A156.13 or BHMA A156.2 test standards.

2.4.3 Auxiliary Locks and Associated Products

Mortise dead locks and dead latches, narrow style dead locks and dead latches, rim latches, dead latches, and dead bolts, and electric strikes shall conform

to BHMA A156.5. Strike boxes shall be furnished with dead bolt and latch strikes for Grade 1. Electric strikes shall be locked from a remote location in fail safe mode. Electric strike for rated openings shall be fail secured.

2.4.4 Lock Cylinders (Mortise)

Lock cylinders shall comply with BHMA A156.5. Lock cylinder shall have not less than seven pins. Cylinders shall have key removable type cores. locks shall be an extension of the existing keying system. The existing locks were manufactured by Best and have interchangeable cores and has a N type keyway. Disassembly of the knob or lockset shall not be required to remove cores from the lockset. All locksets sall accept same interchangeable cores. Competitive manufacturer's "equal" locking systems are acceptable. To be considered "egual" the key lock cylinders or interchangeable cores must be provided to match the existing Keyway designated system that is described above. Provide 8 spare cores. Provide 2 key blanks for each core. A construction master keying system shall be provided.All locksets, lockable exit devices, and padlocks shall accept same interchangeable cores.

2.4.5 Push/Pull Latches

2.4.6 Lock Trim

Lock trim shall be cast, forged, or heavy wrought construction of commercial plain design. In addition to meeting the test requirement of BHMA A156.2 or BHMA A156.13, knobs, lever handles, roses, and escutcheons shall be 0.050 inch thick, if unreinforced. If reinforced, the outer shell shall be 0.035 inch thick and the combined thickness shall be 0.070 inch except that knob shanks shall be 0.060 inchthick. Knob diameter shall be 2-1/8 to 2-1/4 inches.Lever handles shall be of plain design with ends returned to no more than 1/2 inch from the door face.

2.4.7 Electromagnetic Locks

Electromagnetic locks shall allow for unlocking of doors from a remote location by means of push buttons. Electromagnetic locks shall be fail safe (unlocked when power is off) and shall conform to BHMA A156.23.

2.5 EXIT DEVICES AND EXIT DEVICE ACCESSORIES

Exit devices and exit device accessories shall conform to BHMA A156.3, Grade 1.

2.5.1 Exit Devices and Auxiliary Items

Trim shall be of wrought construction and commercial plain design with straight, beveled, or smoothly rounded sides, corners, and edges. Adjustable strikes shall be provided for rim type and vertical rod devices. Open back strikes shall be provided for pairs of doors with mortise and vertical rod devices; except open back strikes shall be used on labeled doors only where specifically provided for in the published listings. Touch bars shall be provided in lieu of conventional crossbars and arms. Escutcheons shall be provided not less than 7 by 2-1/4 inches. Escutcheons shall be cut to suit cylinders and operating trim.

2.6 KEYING

Locks shall be keyed in sets or subsets as scheduled. Manufacturer must coordinate with base locksmith in reference to keying codes for the interchangeable cores and keying requirements. Change keys for locks shall be stamped with change number and the inscription "U.S. Property - Do Not Duplicate." Keys shall be supplied as follows:

Locks: 3 change keys each lock.

Construction keys: 5 total.

The keys shall be furnished to the Contracting Officer arranged in a container for key control system storage in sets or subsets as scheduled.

2.7 DOOR CLOSING DEVICES

Door closing devices shall conform to BHMA A156.4, Grade 1. Closing devices shall be products of one manufacturer for each type specified. The opening resistance of closing devices shall not exceed 15 1bf applied at the latch stile or exceed 5 1bfwhere low opening resistance is scheduled.

2.7.1 Surface Type Closers

Surface type closers shall be Grade 1, Series C02000 Standard Cover with options PT-4H, Size 1 or 2 through Size 6, and PT-4D with back check position valve. Except as otherwise specified, sizes shall conform to the manufacturer's published recommendations. Closers for outswinging exterior doors shall have parallel arms or shall be top jamb mounted. Closers for doors close to a wall shall be of narrow projection so as not to strike the wall at the 90-degree open position.

2.8 DOOR CONTROLS - OVERHEAD HOLDERS

Door controls - overhead holders shall conform to BHMA A156.8.

2.9 ARCHITECTURAL DOOR TRIM

Architectural door trim shall conform to BHMA A156.6.

2.9.1 Door Protection Plates

2.9.2 Push Plates

2.9.2.1 Flat Plates

Flat plates shall be Type J301 0.50 inch thick bronze. Edges of metal plates shall be square.

2.9.3 Door Pulls

Door pulls shall be Category J400 brass of plain modern design. Pulls for hollow metal, mineral core wood or kalamein doors shall be Type J405 thru-bolted to Type J301 flat push plates.

2.10 AUXILIARY HARDWARE

Auxiliary hardware, consisting of Lever extension flush bolts shall be Type L14081. Dust-proof strikes shall be Type L04011 for doors that are not fire rated. Dust-proof strikes shall be Type L04021 for fire rated doors.

2.11 MISCELLANEOUS

2.11.1 Automatic Door Bottoms

Automatic door bottoms shall be mortised type with aluminum housing cover. Door bottom shall have a wool, felt, rubber, vinyl, or neoprene seal and shall be actuated by the opening and closing of the door. The door bottom shall exclude light when the door is in the closed position and shall inhibit the flow of air through the unit.

2.11.2 Metal Thresholds

Thresholds shall conform to BHMA A156.21. Thresholds for exterior doors shall be extruded aluminum of the type indicated and shall provide proper clearance and an effective seal with specified weather stripping. Where required, thresholds shall be modified to receive projecting bolts of flush bolts and exit devices. Thresholds for doors accessible to the handicapped shall be beveled with slopes not exceeding 1:2 and with heights not exceeding 1/2 inch. Air leakage rate of weatherstripping shall not exceed 0.5 cubic feet per minute per lineal foot of crack when tested in accordance with ASTM E 283 at standard test conditions.

2.11.3 Aluminum Housed Type Weatherseals

Weatherseals of the type indicated shall consist of extruded aluminum retainers not less than 0.07 inch wall thickness with vinyl, neoprene, silicone rubber, polyurethane or vinyl brush inserts. Aluminum shall be clear (natural) anodized. Weatherseal material shall be of an industrial/commercial grade. Seals shall remain functional through all weather and temperature conditions. Air leakage rate of weatherstripping shall not exceed 0.5 cubic feet per minute per lineal foot of crack when tested in accordance with ASTM E 283 at standard test conditions.

2.11.4 Door Stops

Wall stops shall conform to BHMA A156.16.

2.12 FASTENINGS

Fastenings of proper type, size, quantity, and finish shall be supplied with each article of hardware. Machine screws and expansion shields shall be used for attaching hardware to concrete or masonry. Fastenings exposed to the weather in the finished work shall be of brass, bronze, or stainless steel. Sex bolts, through bolts, or machine screws and grommet nuts, where used on reverse-bevel exterior doors equipped with half-surface or full-surface hinges, shall employ one-way screws or other approved tamperproof screws. Screws for the jamb leaf of half-mortise and full-surface hinges attached to structural steel frames shall be one-way or other approved tamperproof type.

2.13 FINISHES

Unless otherwise specified, finishes shall conform to those identified in BHMA A156.18. Where painting of primed surfaces is required, painting is specified in Section 09900 PAINTS AND COATINGS.

2.14 HARDWARE FOR FIRE DOORS

Hardware for fire doors shall conform to the requirements of NFPA 80and NFPA 101.

PART 3 EXECUTION

3.1 APPLICATION

Hardware shall be located in accordance with DHI Locations for CSD and DHI Locations for SSD, except that deadlocks shall be mounted 48 inches above finish floor. When approved, slight variations in locations or dimensions will be permitted. Application shall be in accordance with DHI ANSI/DHI A115.1G or DHI ANSI/DHI A115-W. Door control devices for exterior doors such as closers and holders, shall be attached to doors with thru bolts and nuts or sex bolts. Alternate fastening methods may be approved by the Contracting Officer when manufacturers' documentation is submitted to verify that the fastening devices and door reinforcements are adequate to resist wind induced stresses. Electric hardware items and access control devices shall be installed in accordance with manufacturer's printed installation procedures.

3.1.1 Hardware for Fire Doors Assemblies

Hardware for fire doors shall be installed in accordance with the requirements of NFPA 80. Exit devices installed on fire doors shall have a visible label bearing the marking "Fire Exit Hardware". Other hardware installed on fire doors, such as locksets, closers, and hinges shall have a visible label or stamp indicating that the hardware items have been approved by an approved testing agency for installation on fire-rated doors.

3.1.2 Door-Closing Devices

Door-closing devices shall be installed and adjusted in accordance with the templates and printed instructions supplied by the manufacturer of the devices. Insofar as practicable, doors opening to or from halls and corridors shall have the closer mounted on the room side of the door.

3.1.3 Auxiliary Hardware

Lever extension flush bolts shall be installed at the top and bottom of the inactive leaf of pairs of doors. The bottom bolt shall operate into a dust-proof floor strike or threshold.

3.1.4 Thresholds

Thresholds shall be secured with a minimum of three fasteners per single door width and six fasteners per double door width with a maximum spacing of 12 inches. Exterior thresholds shall be installed in a bed of sealant with expansion anchors and stainless steel screws, except that bronze or anodized bronze thresholds shall be installed with expansion anchors with brass screws. Minimum screw size shall be No. 10 length, dependent on job conditions, with a minimum of 3/4 inchthread engagement into the floor or anchoring device used.

3.1.5 Weatherseals

Weatherseals shall be located as indicated, snug to door face and fastened in place with color matched metal screws after door and frames have been finish painted. Screw spacing shall be as recommended by manufacturer.

3.1.6 Gasketing

Gasketing shall be installed at the inside edge of the hinge and head and latch sides of door frame. Frames shall be toleranced for a 1/8 inch clearance between door and frame. Frames shall be treated with tape primer prior to installation.

3.2 OPERATIONAL TESTS

Prior to acceptance of any electrical hardware system, an operational test shall be performed to determine if devices are operating as intended by the specifications. Wiring shall be tested for correct voltage, current carrying capacity, and proper grounding. Stray voltages in lock wiring shall be eliminated to prevent locking devices from releasing in critical situations.

3.3 FIELD QUALITY CONTROL

Supplier shall inspect the completed installation and certify that the hardware has been furnished and installed in accordance with the manufacturers' instructions . The inspection report shall identify any malfunctioning items and recommend adjustment or replacement as appropriate.

3.4 HARDWARE SETS

HW-1

3	pr.	Butts	A5112 NRP
2	ea.	Exit Device	Type 8 FO7
2	ea.	Closer	CO2021
1	set	Weatherstripping	
1	ea.	Threshold	J32190

HW-2

1 1/2	pr.	Butts	A5111
1	ea.	Exit Device	Type 1 FO7
1	ea.	Closer	CO2021
1	set	Weatherstripping	
1	ea.	Threshold	J32190

HW-3

1 1/2	pr.	Butts	A2111
1	ea.	Lockset	FO5
1	ea.	Wallstop	LO2251

HW-4

1 1/2	pr.	Butts	A2111
1	ea.	Closer	CO2021
1	ea.	Push Plate	J305
1	ea.	Pull	J405
1	ea.	Wallstop	LO2251

HW-5

1 1/2	pr.	Butts	A2111
1	ea.	Lockset	FO7

HW-6

1 1/2	pr.	Butts	A2111
1	ea.	Electo-Mechanical lock	

similar or equal to Sargent & Greenleaf
Digital Control shall include the following

* control panel
* Rocker switch input panel with visitor announce button and remote by-pass
* Emergency power rechargeable battery
* All required accessories

HW-7 Bifold Door Hardware

* Extruded Aluminum track
* Spring Loaded hangers with 4 wheel designed to support and align door planels
* Top and Bottom pivots and Jamb brackets
* Door pulls

HW-8 By-passing Doors

* Exteruded Aluminum double channel track
* Heavy duty 4-wheel hangers
* Floor Guides
* Flush cup pulls

HW-9

3	pr.	Butts	A5112 NRP

1	ea.	Lockset	FO7
1	set	Flush Bolts	LO4081
1	set	Weatherstripping	
1	ea.	Threshold	J32190

HW-10

1 1/2	pr.	Butts	A5111
1	ea.	Lockset	FO4
1	ea.	Closer	CO2021
1	ea.	Wallstop	LO2251

-- End of Section --

SECTION TABLE OF CONTENTS

DIVISION 08 - DOORS & WINDOWS

SECTION 08810A

GLASS AND GLAZING

05/97

PART 1 GENERAL

1.1 REFERENCES
1.2 SUBMITTALS
1.3 SYSTEM DESCRIPTION
1.4 DELIVERY, STORAGE AND HANDLING
1.5 PROJECT/SITE CONDITIONS
1.6 WARRANTY
1.6.1 Insulating Glass

PART 2 PRODUCTS

2.1 INSULATING GLASS
2.1.1 Clear Insulating Glass
2.1.2 Low-E Insulating Glass
2.2 ONE-WAY VISION GLASS
2.3 HEAT-TREATED GLASS
2.3.1 Tempered Glass
2.4 LAMINATED GLAZINGS
2.4.1 Laminated Glass
2.5 GLAZING ACCESSORIES
2.5.1 Preformed Tape
2.5.2 Sealant
2.5.3 Glazing Gaskets
2.5.3.1 Fixed Glazing Gaskets
2.5.3.2 Wedge Glazing Gaskets
2.5.3.3 Aluminum Framing Glazing Gaskets
2.5.4 Putty and Glazing Compound
2.5.5 Setting and Edge Blocking

PART 3 EXECUTION

3.1 PREPARATION
3.2 INSTALLATION
3.3 CLEANING
3.4 PROTECTION

-- End of Section Table of Contents --

SECTION 08810A

GLASS AND GLAZING
05/97

PART 1 GENERAL

1.1 REFERENCES

The publications listed below form a part of this specification to the extent referenced. The publications are referred to in the text by basic designation only.

AMERICAN NATIONAL STANDARDS INSTITUTE (ANSI)

ANSI Z97.1	(1984; R 1994) Safety Performance Specifications and Methods of Test for Safety Glazing Materials Used in Buildings

AMERICAN SOCIETY FOR TESTING AND MATERIALS (ASTM)

ASTM C 509	(1994) Elastomeric Cellular Preformed Gasket and Sealing Material
ASTM C 669	(1995) Glazing Compounds for Back Bedding and Face Glazing of Metal Sash
ASTM C 864	(1999) Dense Elastomeric Compression Seal Gaskets, Setting Blocks, and Spacers
ASTM C 920	(1998) Elastomeric Joint Sealants
ASTM C 1036	(1991; R 1997) Flat Glass
ASTM C 1048	(1997b) Heat-Treated Flat Glass - Kind HS, Kind FT Coated and Uncoated Glass
ASTM C 1172	(1996el) Laminated Architectural Flat Glass
ASTM D 395	(1998) Rubber Property - Compression Set
ASTM E 773	(1997) Accelerated Weathering of Sealed Insulating Glass Units
ASTM E 774	(1997) Classification of the Durability of Sealed Insulating Glass Units
ASTM E 1300	(1998) Determining the Minimum Thickness and Type of Glass Required to Resist a Specified Load

U.S. NATIONAL ARCHIVES AND RECORDS ADMINISTRATION (NARA)

16 CFR 1201	Safety Standard for Architectural Glazing Materials

U.S. GENERAL SERVICES ADMINISTRATION (GSA)

CID A-A-378	(Basic) Putty Linseed Oil Type, (for

Wood-Sash-Glazing)

GLASS ASSOCIATION OF NORTH AMERICA (GANA)

GANA Glazing Manual (1997) Glazing Manual

GANA Standards Manual (1995) Engineering Standards Manual

NATIONAL FIRE PROTECTION ASSOCIATION (NFPA)

NFPA 80 (1999) Fire Doors and Fire Windows

1.2 SUBMITTALS

Government approval is required for submittals with a "G" designation; submittals not having a "G" designation are for information only. When used, a designation following the "G" designation identifies the office that will review the submittal for the Government. The following shall be submitted in accordance with Section 01330 SUBMITTAL PROCEDURES:

SD-02 Shop Drawings

Installation;

Drawings showing complete details of the proposed setting methods, mullion details, edge blocking, size of openings, frame details, materials, and types and thickness of glass.

SD-03 Product Data

Insulating Glass;
Glazing Accessories;

Manufacturer's descriptive product data, handling and storage recommendations, installation instructions, and cleaning instructions.

SD-04 Samples

Insulating Glass;

Two 8 x 10 inch samples of each of the following: tinted glass, and insulating glass units.

SD-07 Certificates

Insulating Glass;

Certificates stating that the glass meets the specified requirements. Labels or manufacturers marking affixed to the glass will be accepted in lieu of certificates.

1.3 SYSTEM DESCRIPTION

Glazing systems shall be fabricated and installed watertight and airtight to withstand thermal movement and wind loading without glass breakage, gasket failure, deterioration of glazing accessories, and defects in the work. Glazed panels shall comply with the safety standards, as indicated in accordance with ANSI Z97.1. Glazed panels shall comply with indicated wind/snow loading in accordance with ASTM E 1300.

1.4 DELIVERY, STORAGE AND HANDLING

Glazing compounds shall be delivered to the site in the manufacturer's unopened

containers. Glass shall be stored indoors in a safe, well ventilated dry location in accordance with manufacturer's instructions, and shall not be unpacked until needed for installation. Glass shall not be stored on site over 1 month.

1.5 PROJECT/SITE CONDITIONS

Glazing work shall not be started until outdoor temperature is above 40 degrees F and rising, unless procedures recommended by glass manufacturer and approved by Contracting Officer are made to warm the glass and rabbet surfaces. Ventilation shall be provided to prevent condensation of moisture on glazing work during installation. Glazing work shall not be performed during damp or raining weather.

1.6 WARRANTY

1.6.1 Insulating Glass

Manufacturer shall warrant the insulating glass to be free of fogging or film formation on the internal glass surfaces caused by failure of the hermetic seal for a period of 10 years from Date of Substantial Completion. Warranty shall be signed by manufacturer.

PART 2 PRODUCTS

2.1 INSULATING GLASS

Insulating glass shall be Class A preassembled units of dual-seal construction consisting of lites of glass separated by an aluminum, steel, or stainless steel, spacer and dehydrated space conforming to ASTM E 773 and ASTM E 774. Spacer shall be roll-formed, with bent or tightly welded or keyed and sealed joints to completely seal the spacer periphery and eliminate moisture and hydrocarbon vapor transmission into airspace through the corners. Primary seal shall be compressed polyisobutylene and the secondary seal shall be a specially formulated silicone. Glass types shall be as follows:

2.1.1 Clear Insulating Glass

Glass for two-pane insulating units shall be Type I annealed glass, Class 1 - clear, Quality q3 - glazing select, conforming to ASTM C 1036. Glass performance shall be R-Value/Winter Nighttime 2.1 to 2.8.

2.1.2 Low-E Insulating Glass

Interior glass panes for Low-E insulating units shall be Type I annealed flat glass, Class 1-clear with anti-reflective low-emissivity coating on No. 2 surface (inside surface of exterior pane), Quality q3 - glazing select, conforming to ASTM C 1036.

2.2 ONE-WAY VISION GLASS

TypeI, Class1, QQuality q1, 1/4 inch thick, coated one face with a hard adherent film of chromium or other approved coating of proven equivalent durability. The glass shall transmit not less than 5 percent or more than 11 percent of total incident light in the visible region and shall reflect from the front surface of the coating not less than 45 percent of the total incident light in the visible region.

2.3 HEAT-TREATED GLASS

Heat-treated glass shall conform to the following requirements.

2.3.1 Tempered Glass

Tempered glass shall be kind FT fully tempered transparent flat type, Class 1-clear, Condition A uncoated surface, Quality q3 - glazing select, ASTM C 1048 and GANA Standards Manual. Color shall be clear.

2.4 LAMINATED GLAZINGS

2.4.1 Laminated Glass

Laminated glass shall consist of one layers of Type I transparent floatglassand one layer of Low-E insulating glass, , Class 1-clear Quality q3 - glazing select, conforming to ASTM C 1036. Glass shall be bonded together with 0.030 inchthick PVB interlayer under pressure, or alternatives such as resin laminates, conforming to requirements of 16 CFR 1201 and ASTM C 1172.

2.5 GLAZING ACCESSORIES

2.5.1 Preformed Tape

Preformed tape shall be elastomeric rubber extruded into a ribbon of a width and thickness suitable for specific application. Tape shall be of type which will remain resilient, have excellent adhesion, and be chemically compatible to glass, metal, or wood.

2.5.2 Sealant

Sealant shall be elastomeric conforming to ASTM C 920, Type S or M, Grade NS, Class 12.5, Use G, of type chemically compatible with setting blocks, preformed sealing tape and sealants used in manufacturing insulating glass. Color of sealant shall be as selected.

2.5.3 Glazing Gaskets

Glazing gaskets shall be extruded with continuous integral locking projection designed to engage into metal glass holding members to provide a watertight seal during dynamic loading, building movements and thermal movements. Glazing gaskets for a single glazed opening shall be continuous one-piece units with factory-fabricated injection-molded corners free of flashing and burrs. Glazing gaskets shall be in lengths or units recommended by manufacturer to ensure against pull-back at corners. Glazing gasket profiles shall be as indicated on drawings.

2.5.3.1 Fixed Glazing Gaskets

Fixed glazing gaskets shall be closed-cell (sponge) smooth extruded compression gaskets of cured elastomeric virgin neoprene compounds conforming to ASTM C 509, Type 2, Option 1.

2.5.3.2 Wedge Glazing Gaskets

Wedge glazing gaskets shall be high-quality extrusions of cured elastomeric virgin neoprene compounds, ozone resistant, conforming to ASTM C 864, Option 1, Shore A durometer between 65 and 75.

2.5.3.3 Aluminum Framing Glazing Gaskets

Glazing gaskets for aluminum framing shall be permanent, elastic, non-shrinking, non-migrating, watertight and weathertight.

2.5.4 Putty and Glazing Compound

Glazing compound shall conform to ASTM C 669 for face-glazing metal sash. Putty shall be linseed oil type conforming to CID A-A-378 for face-glazing primed wood

sash. Putty and glazing compounds shall not be used with insulating glass or laminated glass.

2.5.5 Setting and Edge Blocking

Neoprene setting blocks shall be dense extruded type conforming to ASTM D 395, Method B, Shore A durometer between 70 and 90. Edge blocking shall be Shore A durometer of 50 (+ or - 5). Silicone setting blocks shall be required when blocks are in contact with silicone sealant. Profiles, lengths and locations shall be as required and recommended in writing by glass manufacturer.

PART 3 EXECUTION

3.1 PREPARATION

Openings and framing systems scheduled to receive glass shall be examined for compliance with approved shop drawings, GANA Glazing Manual and glass manufacturer's recommendations including size, squareness, offsets at corners, presence and function of weep system, face and edge clearance requirements and effective sealing between joints of glass-framing members. Detrimental materials shall be removed from glazing rabbet and glass surfaces and wiped dry with solvent. Glazing surfaces shall be dry and free of frost.

3.2 INSTALLATION

Glass and glazing work shall be performed in accordance with approved shop drawings, GANA Glazing Manual, glass manufacturer's instructions and warranty requirements. Glass shall be installed with factory labels intact and removed only when instructed. Wired glass and shall be installed in accordance with NFPA 80. Edges and corners shall not be ground, nipped or cut after leaving factory. Springing, forcing or twisting of units during installation will not be permitted.

3.3 CLEANING

Upon completion of project, outside surfaces of glass shall be washed clean and the inside surfaces of glass shall be washed and polished in accordance with glass manufacturer's recommendations.

3.4 PROTECTION

Glass work shall be protected immediately after installation. Glazed openings shall be identified with suitable warning tapes, cloth or paper flags, attached with non-staining adhesives. Reflective glass shall be protected with a protective material to eliminate any contamination of the reflective coating. Protective material shall be placed far enough away from the coated glass to allow air to circulate to reduce heat buildup and moisture accumulation on the glass. Glass units which are broken, chipped, cracked, abraded, or otherwise damaged during construction activities shall be removed and replaced with new units.

-- End of Section --

SECTION TABLE OF CONTENTS

DIVISION 09 - FINISHES

SECTION 09250A

GYPSUM WALLBOARD

04/01

PART 1 GENERAL

1.1 REFERENCES
1.2 SYSTEM DESCRIPTION
1.2.1 Fire-Rated Construction
1.3 SUBMITTALS
1.4 QUALIFICATIONS
1.5 DELIVERY, STORAGE AND HANDLING
1.6 ENVIRONMENTAL CONDITIONS

PART 2 MATERIALS

2.1 NON-LOADBEARING STUD WALLS
2.1.1 Studs
2.1.2 Runner Tracks
2.2 SUSPENDED CEILING FRAMING
2.3 GYPSUM BOARD
2.3.1 Standard Gypsum Board
2.3.2 Fire-Rated Gypsum Board
2.4 TRIM, MOLDINGS, AND ACCESSORIES
2.4.1 Taping and Embedding Compound
2.4.2 Finishing or Topping Compound
2.4.3 All-Purpose Compound
2.4.4 Joint Tape
2.4.5 Trim, Control Joints, Beads, Stops and Nosings
2.5 FASTENINGS AND ADHESIVES
2.5.1 Nails
2.5.2 Screws
2.5.3 Adhesives
2.5.4 Hangers
2.5.5 Wire and Clip Type Fastenings
2.5.5.1 Tie Wire
2.5.5.2 Clips
2.6 CEMENTITIOUS BACKER UNITS

PART 3 EXECUTION

3.1 INTERIOR WALL FRAMING
3.1.1 Wall Openings
3.1.2 Wall Control Joints
3.1.3 Blocking
3.2 SUSPENDED CEILING FRAMING
3.2.1 Hangers
3.2.2 Main Runners
3.2.3 Furring Channels
3.2.4 Ceiling Openings
3.2.5 Light Fixtures and Air Diffusers
3.2.6 Control Joints
3.2.6.1 Interior Ceilings With Perimeter Relief
3.2.6.2 Interior Ceilings Without Perimeter Relief

3.3 APPLICATION OF GYPSUM BOARD
3.3.1 Adhesively-Applied Gypsum Board
3.4 TRIM, MOLDINGS, AND ACCESSORIES INSTALLATION
3.5 GYPSUM BOARD FINISH
3.6 APPLICATION OF CEMENTITIOUS BACKER UNITS
3.7 FIRE-RESISTANT ASSEMBLIES
3.8 PATCHING

-- End of Section Table of Contents --

SECTION 09250A

GYPSUM WALLBOARD
04/01

PART 1 GENERAL

1.1 REFERENCES

The publications listed below form a part of this specification to the extent referenced. The publications are referred to in the text by basic designation only.

AMERICAN NATIONAL STANDARDS INSTITUTE (ANSI)

ANSI A108.11	(1992) Interior Installation of Cementitious Backup Units
ANSI A118.9	(1992) Test Methods and Specifications for Cementitious Backer Units

AMERICAN SOCIETY FOR TESTING AND MATERIALS (ASTM)

ASTM A 853	(1993; R 1998) Steel Wire, Carbon, for General Use
ASTM C 36/C 36M	(1999) Gypsum Wallboard
ASTM C 475	(1994) Joint Compound and Joint Tape for Finishing Gypsum Board
ASTM C 514	(1996) Nails for the Application of Gypsum Board
ASTM C 557	(1999) Adhesive for Fastening Gypsum Wallboard to Wood Framing
ASTM C 630/C 630M	(2000) Water-Resistant Gypsum Backing Board
ASTM C 645	(2000) Nonstructural Steel Framing Members
ASTM C 754	(1999a) Installation of Steel Framing Members to Receive Screw-Attached Gypsum Panel Products
ASTM C 840	(1999) Application and Finishing of Gypsum Board
ASTM C 1002	(2000) Steel Drill Screws for the Application of Gypsum Panel Products or Metal Plaster Bases
ASTM C 1047	(1999) Accessories for Gypsum Wallboard and Gypsum Veneer Base

GYPSUM ASSOCIATION (GA)

GA 214	(1996) Recommended Levels of Gypsum Board Finish
GA 216	(1996) Application and Finishing of Gypsum Board
GA 600	(1997) Fire Resistance Design Manual

UNDERWRITERS LABORATORIES (UL)

UL Fire Resist Dir (1999) Fire Resistance Directory (2 Vol.)

1.2 SYSTEM DESCRIPTION

1.2.1 Fire-Rated Construction

Joints of fire-rated gypsum board enclosures shall be closed and sealed in accordance with UL test requirements or GA requirements, and as required to meet pressurization requirements. Penetrations through rated partitions and ceilings shall be sealed tight in accordance with tested systems. Fire ratings shall be as indicated.

1.3 SUBMITTALS

Government approval is required for submittals with a "G" designation; submittals not having a "G" designation are for information only. When used, a designation following the "G" designation identifies the office that will review the submittal for the Government. The following shall be submitted in accordance with Section 01330 SUBMITTAL PROCEDURES:

SD-02 Shop Drawings

Steel Framing; G-RE
Control Joints; G-RE
Fire-Resistant Assemblies; G-RE

Drawings and installation details for ceiling framing, furring, special wall framing, and framed openings in walls and ceilings.

SD-07 Certificates

Gypsum Board;
Steel Framing;
Fire-Rated Gypsum Board;
Cementitious Backer Units;

Certificates stating that the steel framing and gypsum wallboard meet the specified requirements.

1.4 QUALIFICATIONS

Manufacturer shall specialize in manufacturing the types of material specified and shall have a minimum of 5 years of documented successful experience. Installer shall specialize in the type of gypsum board work required and shall have a minimum of 3 years of documented successful experience.

1.5 DELIVERY, STORAGE AND HANDLING

Materials shall be delivered in original containers bearing the name of manufacturer, contents, and brand name. Materials shall be stored off the ground in a weathertight structure for protection. Gypsum boards shall be stacked flat, off floor and supported to prevent sagging and warpage. Adhesives and joint materials shall be stored in accordance with manufacturer's printed instructions. Damaged or deteriorated materials shall be removed from jobsite.

1.6 ENVIRONMENTAL CONDITIONS

Environmental conditions for application and finishing of gypsum board shall be in accordance with ASTM C 840. During the application of gypsum board without adhesive, a room temperature of not less than 40 degrees F shall be maintained.

During the application of gypsum board with adhesive, a room temperature of not less than 50 degrees F shall be maintained for 48 hours prior to application and continuously afterwards until completely dry. Building spaces shall be ventilated to remove water not required for drying joint treatment materials. Drafts shall be avoided during dry hot weather to prevent materials from drying too rapidly.

PART 2 MATERIALS

2.1 NON-LOADBEARING STUD WALLS

2.1.1 Studs

Studs for non-loadbearing walls shall conform to ASTM C 645. Studs shall be C-shaped, roll formed steel with minimum uncoated design thickness of 0.0284 in made from G40 hot-dip galvanized coated sheet.

2.1.2 Runner Tracks

Floor and ceiling runner tracks shall conform to ASTM C 645. Tracks shall be prefabricated, U-shaped with minimum 1 inch flanges, unpunched web, thickness to match studs, made from G40 hot-dip galvanized coated sheet.

2.2 SUSPENDED CEILING FRAMING

Suspended ceiling framing system shall have the capability to support the finished ceiling, light fixtures, air diffusers, and accessories, as shown. The suspension system shall have a maximum deflection of L/240. Carrying channels shall be formed from minimum 0.0548 in thick cold-rolled steel, 1-1/2 x 3/4 inch. Furring members shall be formed from cold-rolled steel, 7/8 x 2-9/16 inch. Carrying channels and furring members shall be made from hot-dip galvanized coated sheet.

2.3 GYPSUM BOARD

Gypsum board shall be asbestos-free. Gypsum board shall have square-cut ends, tapered or beveled edges and shall be maximum possible length. Gypsum board thickness shall be as shown.

2.3.1 Standard Gypsum Board

Regular gypsum board shall conform to ASTM C 36/C 36M, and shall be 48 inches wide.

2.3.2 Fire-Rated Gypsum Board

Fire-rated gypsum board shall conform to ASTM C 36/C 36M, and shall be Type X as required, 48 inches wide.

2.4 TRIM, MOLDINGS, AND ACCESSORIES

2.4.1 Taping and Embedding Compound

Taping and embedding compound shall conform to ASTM C 475. Compound shall be specifically formulated and manufactured for use in embedding tape at gypsum wallboard joints and fastener heads, and shall be compatible with tape and substrate.

2.4.2 Finishing or Topping Compound

Finishing or topping compound shall conform to ASTM C 475. Compound shall be specifically formulated and manufactured for use as a finishing compound for gypsum board.

2.4.3 All-Purpose Compound

All-purpose compound shall be specifically formulated and manufactured to use as a taping and finishing compound, and shall be compatible with tape and substrate.

2.4.4 Joint Tape

Joint tape shall conform to ASTM C 475 and shall be as recommended by gypsum board manufacturer.

2.4.5 Trim, Control Joints, Beads, Stops and Nosings

Items used to protect edges, corners, and to provide architectural features shall be in accordance with ASTM C 1047.

2.5 FASTENINGS AND ADHESIVES

2.5.1 Nails

Nails shall conform to ASTM C 514. Nails shall be hard-drawn low or medium-low carbon steel, suitable for intended use. Special nails for predecorated gypsum board shall be as recommended by predecorated gypsum board manufacturer.

2.5.2 Screws

Screws shall conform to ASTM C 1002. Screws shall be self-drilling and self-tapping steel, Type G for gypsum board to gypsum board Type S for wood or light-gauge steel framing.

2.5.3 Adhesives

Adhesives shall conform to ASTM C 557. Adhesives shall be formulated to bond gypsum board to wood framing members. For securing gypsum board to metal framing, adhesive shall be as recommended by gypsum board manufacturer.

2.5.4 Hangers

Suspended ceiling runner channel hangers shall be soft, annealed steel wire not less than No. 8 SWG, conforming to ASTM A 853 or flat iron or steel straps, at least 3/32 x 7/8 inch size, coated with zinc, cadmium, or rust-inhibiting paint.

2.5.5 Wire and Clip Type Fastenings

Tie wire, clips, rings, and other fastenings shall be except that walls, partitions, and other vertical surfaces not incorporated in ceiling construction may be erected with soft, annealed steel conforming to ASTM A 853.

2.5.5.1 Tie Wire

Tie wire for constructing partitions and vertical furring, for securing metal lath to supports, and for lacing shall be not less than No. 18 SWG. Tie wire for other applications shall be not less than No. 16 SWG.

2.5.5.2 Clips

Clips used in lieu of tie wire for securing the furring channels to the runner channels in ceiling construction shall be made from strip not less than 1/8 inch thick or shall be hairpin clip, formed of wire not less than 0.01620 inch nominal diameter. Other clips and rings or fastenings of similar materials shall be equivalent in holding power to that provided by tie wire for the specific application.

2.6 CEMENTITIOUS BACKER UNITS

Cementitious backer units shall comply with ANSI A118.9.

PART 3 EXECUTION

3.1 INTERIOR WALL FRAMING

Steel framing and furring members shall be installed in accordance with ASTM C 754. Members shall be in alignment with spacings not to exceed the maximum spacings indicated on drawings. Runners shall be aligned accurately at the floor and ceiling and securely anchored.

3.1.1 Wall Openings

The framing system shall provide for the installation and anchorage of the required subframes or finish frames for wall openings at doors, pass-through openings, and access panels. Partitions abutting continuous suspended ceilings shall be strengthened for rigidity at rough openings of more than 30 inches wide. Studs at openings shall be 0.0329 in minimum bare metal thickness and spot grouted at jamb anchor inserts. Double studs shall be fastened together with screws and secured to floor and overhead runners. Two studs shall be used for framing solid-core doors, doors over 36 inches wide and extra-heavy doors such as X-ray room doors.

3.1.2 Wall Control Joints

Control joints for expansion and contraction in the walls shall be constructed with double studs installed 1/2 inch apart in interior walls or wall furrings where indicated on drawings. Control joint spacing shall not exceed 30 feet. Ceiling-height door frames may be used as vertical control joints. Door frames of less than ceiling height may be used as control joints only if standard control joints extend to ceiling from both corners of top of door frame. Control joints between studs shall be filled with firesafing insulation in fire rated partitions.

3.1.3 Blocking

Blocking shall be provided as necessary for mounted equipment. Blocking shall be metal or wood and shall be cut to fit between framing members. Blocking shall be rigidly anchored to the framing members. Under no circumstances will accessories or other wall mounted equipment be anchored directly to gypsum wallboard.

3.2 SUSPENDED CEILING FRAMING

Suspended ceiling system framing shall be installed in accordance with ASTM C 754.

3.2.1 Hangers

Hangers shall be spaced not more than 48 inches along runner channels and 36 inches in the other direction or 42 inches in both directions unless otherwise indicated. Locations of hanger wires shall be coordinated with other work. Hangers at ends of runner channels shall be located not more than 6 inches from wall. Hanger wire shall be looped around bottom chord of open-web steel joists, or secured to structural elements with suitable fasteners. Sags or twists which develop in the suspended system shall be adjusted. Damaged or faulty parts shall be replaced.

3.2.2 Main Runners

Main runner channels shall be installed in accordance with ASTM C 754. Hanger wires shall be double strand saddle-tied to runner channels and the ends of hanger wire shall be twisted three times around itself. Main runners shall be located to within 6 inches of the paralleling wall to support the ends of cross furring. Main runners shall not come in contact with abutting masonry or concrete walls. Where main runners are spliced, ends shall be overlapped 12 inches with flanges of channels interlocked, and shall be securely tied at each end of splice with wire looped twice around the channels.

3.2.3 Furring Channels

Furring channels shall be spaced in accordance with ASTM C 754. Furring channels shall be secured to the runner channels and to structural supports at each crossing with tie wire, hairpin clips, or equivalent fastenings. Furring channels shall be located within 2 inches of parallel walls and beams, and shall be cut 1/2 inch short of abutting walls.

3.2.4 Ceiling Openings

Support members shall be provided as required at ceiling openings for access panels, recessed light fixtures, and air supply or exhaust. Support members shall be not less than 1-1/2 inch main runner channels and vertically installed suspension wires or straps shall be located to provide at least the minimum support specified herein for furring and wallboard attachment. Intermediate structural members not a part of the structural system, shall be provided for attachment or suspension of support members.

3.2.5 Light Fixtures and Air Diffusers

Light fixtures and air diffusers shall be supported directly from suspended ceiling runners. Wires shall be provided at appropriate locations to carry the weight of recessed or surface mounted light fixtures and air diffusers.

3.2.6 Control Joints

Ceiling control joints for expansion and contraction shall be located where indicated on drawings. A control joint or intermediate blocking shall be installed where ceiling framing members change direction.

3.2.6.1 Interior Ceilings With Perimeter Relief

Control joints shall be installed so that linear dimensions between control joints shall not exceed 50 feet in either direction nor more than 2500 square feet.

3.2.6.2 Interior Ceilings Without Perimeter Relief

Control joints shall be installed so that linear dimensions between control joints shall not exceed 30 feet in either direction nor more than 900 square feet.

3.3 APPLICATION OF GYPSUM BOARD

Gypsum board shall be installed in accordance with ASTM C 840, GA 214 and GA 216 and as specified. Paragraph 17.3.1 GENERAL of ASTM C 840 which permits usage of water resistant gypsum board as a base for adhesive application of ceramic or plastic tile on ceilings, does not apply. Edges and ends of gypsum boards shall be cut to obtain neat fitting joints. End joints of adjoining boards shall be staggered, and shall be staggered on opposite sides of wall. Boards shall be applied with moderate contact without forcing in place. Holes for pipes, fixtures or other small openings shall be cut with a tool which will provide a neat fit. Screws shall be driven so that the heads are slightly below the plane of paper face. Fracturing the paper face or damaging the core shall be avoided.

Trim shall be installed at external and internal angles formed by the intersecting gypsum board surfaces with other surfaces. Corner beads shall be installed to vertical and horizontal corners in accordance with manufacturer's published instructions. Boards of maximum practical length shall be used so that an absolute minimum number of end joints occur. Gypsum board partitions in rooms with ceiling heights less than 10 feet shall have full height boards installed vertically with no end joints in the gypsum installation.

3.3.1 Adhesively-Applied Gypsum Board

Walls scheduled to receive adhesively-applied gypsum board shall be dry, free of dust, oil, or form release agents, protrusions or voids, or foreign matter that would affect a proper bond.

3.4 TRIM, MOLDINGS, AND ACCESSORIES INSTALLATION

Trim, moldings and accessories shall be installed in accordance with GA 216.

3.5 GYPSUM BOARD FINISH

Gypsum board shall be finished in accordance with ASTM C 840, GA 214 and GA 216. Plenum areas above ceilings shall be finished to Level 1 in accordance with GA 214. Water resistant gypsum backing board, ASTM C 630/C 630M, to receive ceramic tile shall be finished to Level 2 in accordance with GA 214. Walls and ceilings to receive a heavy-grade wall covering or heave textured finish before painting shall be finished to Level 3 in accordance with GA 214. Walls and ceilings without critical lighting to receive flat paints, light textures, or wall coverings shall be finished to Level 4 in accordance with GA 214. Unless otherwise specified, all gypsum board walls, partitions and ceilings shall be finished to Level 5 in accordance with GA 214.

3.6 APPLICATION OF CEMENTITIOUS BACKER UNITS

Cementitious backer units shall be installed in accordance with ANSI A108.11. Fasteners shall be the type designed for cement board application.

3.7 FIRE-RESISTANT ASSEMBLIES

Gypsum wallboard construction for fire-rated assemblies shall be in accordance with UL Fire Resist Dir, or GA 600 for the design number indicated on drawings.

3.8 PATCHING

Surface defects and damage shall be corrected as required to leave gypsum board smooth, uniform in appearance, and ready to receive finish as specified.

-- End of Section --

SECTION TABLE OF CONTENTS

DIVISION 09 - FINISHES

SECTION 09310A

CERAMIC TILE

07/98

PART 1 GENERAL

1.1 REFERENCES
1.2 SUBMITTALS
1.3 DELIVERY AND STORAGE
1.4 ENVIRONMENTAL REQUIREMENTS
1.5 WARRANTY

PART 2 PRODUCTS

2.1 TILE
2.1.1 Porcelain Tile
2.1.2 Glazed Wall Tile
2.1.3 Accessories
2.2 SETTING-BED
2.2.1 Aggregate for Concrete Fill
2.2.2 Portland Cement
2.2.3 Sand
2.2.4 Hydrated Lime
2.2.5 Reinforcing Wire Fabric
2.3 WATER
2.4 MORTAR, GROUT, AND ADHESIVE
2.4.1 Dry-Set Portland Cement Mortar
2.4.2 Latex-Portland Cement Mortar
2.4.3 Ceramic Tile Grout
2.4.4 Organic Adhesive
2.4.5 Epoxy Resin Grout
2.4.6 Furan Resin Grout
2.4.7 Cementitious Backer Board

PART 3 EXECUTION

3.1 PREPARATORY WORK AND WORKMANSHIP
3.2 GENERAL INSTALLATION REQUIREMENTS
3.3 INSTALLATION OF WALL TILE
3.3.1 Dry-Set Mortar and Latex-Portland Cement Mortar
3.3.2 Organic Adhesive
3.3.3 Furan Mortar and Grout
3.4 EXPANSION JOINTS
3.4.1 Walls
3.4.2 Floors
3.5 CLEANING AND PROTECTING

-- End of Section Table of Contents --

SECTION 09310A

CERAMIC TILE
07/98

PART 1 GENERAL

1.1 REFERENCES

The publications listed below form a part of this specification to the extent referenced. The publications are referred to in the text by basic designation only.

AMERICAN NATIONAL STANDARDS INSTITUTE (ANSI)

ANSI A108.1A	(1992) Installation of Ceramic Tile in the Wet-Set Method, with Portland Cement Mortar
ANSI A108.1B	(1992) Installation of Ceramic Tile on a Cured Portland Cement Mortar Setting Bed with Dry-Set or Latex Portland Cement Mortar
ANSI A108.4	(1992) Installation of Ceramic Tile with Organic Adhesives or Water Cleanable Tile Setting Epoxy Adhesive
ANSI A108.5	(1992) Installation of Ceramic Tile with Dry-Set Portland Cement Mortar or Latex-Portland Cement Mortar
ANSI A108.8	(1992) Installation of Ceramic Tile with Chemical Resistant Furan Mortar and Grout
ANSI A118.1	(1992) Dry-Set Portland Cement Mortar
ANSI A118.3	(1992) Chemical Resistant, Water Cleanable Tile Setting and Grouting Epoxy and Water Cleanable Tile Setting Epoxy Adhesive
ANSI A118.4	(1992) Latex-Portland Cement Mortar
ANSI A118.5	(1992) Chemical Resistant Furan Mortars and Grouts for Tile
ANSI A118.6	(1992) Ceramic Tile Grouts
ANSI A118.9	(1992) Cementitious Backer Units
ANSI A136.1	(1992) Organic Adhesives for Installation of Ceramic Tile
ANSI A137.1	(1988) Ceramic Tile

AMERICAN SOCIETY FOR TESTING AND MATERIALS (ASTM)

ASTM A 185	(1997) Steel Welded Wire Fabric, Plain, for Concrete Reinforcement
ASTM C 33	(1997) Concrete Aggregates

ASTM C 144	(1997) Aggregate for Masonry Mortar
ASTM C 150	(1997) Portland Cement
ASTM C 206	(1984; R 1997) Finishing Hydrated Lime
ASTM C 207	(1991; R 1997) Hydrated Lime for Masonry Purposes
ASTM C 373	(1988; R 1994) Water Absorption, Bulk Density, Apparent Porosity, and Apparent Specific Gravity of Fired Whiteware Products
ASTM C 482	(1992) Test Medhod for Bond Strength of Ceramic Tile to Portland Cement
ASTM C 501	(1992) Test Method for Relative Resistance to Wear of Unglazed Ceramic Tile by the Taber Abraser
ASTM C 648	(1998) Breaking Strength of Ceramic Tile
ASTM C 1026	(1987; R 1996) Measuring the Resistance of Ceramic Tile to Freeze-Thaw Cycling
ASTM C 1027	(1984; R 1990) Determining Visible Abrasion Resistance of Glazed Ceramic Tile
ASTM C 1028	(1996) Determining the Static Coefficient of Friction of Ceramic Tile and Other Like Surfaces by the Horizontal Dynamometer Pull-Meter Method

CODE OF FEDERAL REGULATIONS (CFR)

36 CFR 1191	Americans with Disaabilities Act (ADA) Accessibility Guidelines for Buildings and Facilities

TILE COUNCIL OF AMERICA (TCA)

TCA Hdbk	(1997) Handbook for Ceramic Tile Installation

1.2 SUBMITTALS

Government approval is required for submittals with a "G" designation; submittals not having a "G" designation are for information only. When used, a designation following the "G" designation identifies the office that will review the submittal for the Government. The following shall be submitted in accordance with Section 01330 SUBMITTAL PROCEDURES:

SD-03 Product Data

Tile;
Setting-Bed;
Mortar, Grout, and Adhesive;

Manufacturer's catalog data.

Tile;
Mortar and Grout;

Manufacturers preprinted installation and cleaning instructions.

SD-04 Samples

Tile and Grout; G-AE
Accessories; G-RE

Three actual samples of sufficient size to show color range, pattern, type and joints.

SD-07 Certificates

Tile;
Mortar, Grout, and Adhesive;

Certificates indicating conformance with specified requirements. A master grade certificate shall be furnished for tile.

1.3 DELIVERY AND STORAGE

Materials shall be delivered to the project site in manufacturer's original unopened containers with seals unbroken and labels and hallmarks intact. Materials shall be kept dry, protected from weather, and stored under cover in accordance with manufacturer's instructions.

1.4 ENVIRONMENTAL REQUIREMENTS

Ceramic tile work shall not be performed unless the substrate and ambient temperature is at least 50 degrees F and rising. Temperature shall be maintained above 50 degrees F while the work is being performed and for at least 7 days after completion of the work. When temporary heaters are used they shall be vented to the outside to avoid carbon dioxide damage to new tilework.

1.5 WARRANTY

Manufacturer's standard performance guarantees or warranties that extend beyond a 1-year period shall be provided.

PART 2 PRODUCTS

2.1 TILE

Tile shall be standard grade conforming to ANSI A137.1. Containers shall be grade sealed. Seals shall be marked to correspond with the marks on the signed master grade certificate. Tile shall be impact resistant with a minimum breaking strength for wall tile of 90 lbs and 250 lbs for floor tile in accordance with ASTM C 648. Tile for cold climate projects shall be rated frost resistant by the manufacturer as determined by ASTM C 1026. Water absorption shall be 0.50 maximum percent in accordance with ASTM C 373. Floor tile shall have a minimum coefficient of friction of 0.50 wet and dry in accordance with ASTM C 1028. Floor tile shall be Class IV-Heavy Traffic, durability classification as rated by the manufacturer when tested in accordance with ASTM C 1027 for abrasion resistance as related to foot traffic. Color shall be in accordance with Section 09915 Color Schedule.

2.1.1 Porcelain Tile

Porcelain tile and trim shall be unglazed with the color extending uniformly through the body of the tile. Tile size shall be nominal 12 by 12 inches and 6 inches by 6 inches by 5/16 inch thick. See specification 09915 COLOR SCHEDULE for pattern details and color. Tile shall meet or exceed the following criteria: Abrasive Wear in accordance with ASTM C 501 and Bonding Strength in

accordance with ASTM C 482. Tile shall comply with 36 CFR 1191 for Coefficient of Friction for interior floors.

2.1.2 Glazed Wall Tile

Glazed wall tile and trim shall be cushion edged with bright glaze. Tile shall be 4-1/4 x 4-1/4 inches.

2.1.3 Accessories

Accessories shall be the built-in type of the same materials and finish as the wall tile.

2.2 SETTING-BED

The setting-bed shall be composed of the following:

2.2.1 Aggregate for Concrete Fill

Aggregate shall conform to ASTM C 33. Maximum size of coarse aggregate shall not be greater than one-half the thickness of concrete fill.

2.2.2 Portland Cement

Cement shall conform to ASTM C 150, Type I, white for wall mortar and gray for other uses.

2.2.3 Sand

Sand shall conform to ASTM C 144.

2.2.4 Hydrated Lime

Hydrated lime shall conform to ASTM C 206, Type S or ASTM C 207, Type S.

2.2.5 Reinforcing Wire Fabric

Wire fabric shall conform to ASTM A 185. Wire shall be either 2 x 2 inch mesh, 16/16 wire or 1-1/2 x 2 inch mesh, 16/13 wire.

2.3 WATER

Water shall be potable.

2.4 MORTAR, GROUT, AND ADHESIVE

Mortar, grout, and adhesive shall conform to the following:

2.4.1 Dry-Set Portland Cement Mortar

ANSI A118.1.

2.4.2 Latex-Portland Cement Mortar

ANSI A118.4.

2.4.3 Ceramic Tile Grout

ANSI A118.6; sand portland cement grout dry-set groutlatex-portland cement grout. Color shall be in accordance with Section 09915 Color Schedule.

2.4.4 Organic Adhesive

ANSI A136.1, Type I.

2.4.5 Epoxy Resin Grout

ANSI A118.3.

2.4.6 Furan Resin Grout

ANSI A118.5 and consist of an intimate mixture of furfuryl-alcohol resin with carbon filler and catalyst.

2.4.7 Cementitious Backer Board

Cementitious backer units, for use as title substrate over wood sub-floors, shall be in accordance with ANSI A118.9. Cementitious backer units shall be 1/2inch thick.

PART 3 EXECUTION

3.1 PREPARATORY WORK AND WORKMANSHIP

Surface to receive tile shall be inspected and shall conform to the requirements of ANSI A108.1A or ANSI A108.1B for surface conditions for the type setting bed specified and for workmanship. Variations of surface to be tiled shall fall within maximum values shown below:

TYPE	WALLS	FLOORS
Dry-Set Mortar	1/8 inch in 8 ft.	1/8 inch in 10 ft.
Organic Adhesives	1/8 inch in 8 ft.	1/16 inch in 3 ft.
Latex portland cement mortar	1/8 inch in 8 ft.	1/8 inch in 10 ft.
Epoxy	1/8 inch in 8 ft.	1/8 inch in 10 ft.

3.2 GENERAL INSTALLATION REQUIREMENTS

Tile work shall not be started until roughing in for mechanical and electrical work has been completed and tested, and built-in items requiring membrane waterproofing have been installed and tested. Floor tile installation shall not be started in spaces requiring wall tile until after wall tile has been installed. Tile in colors and patterns indicated shall be applied in the area shown on the drawings. Tile shall be installed with the respective surfaces in true even planes to the elevations and grades shown. Special shapes shall be provided as required for sills, jambs, recesses, offsets, external corners, and other conditions to provide a complete and neatly finished installation. Tile bases and coves shall be solidly backed with mortar.

3.3 INSTALLATION OF WALL TILE

Wall tile shall be installed in accordance with the TCA Hdbk, method W-202. **Install tile around switch plates and toilet fixtures.**

3.3.1 Dry-Set Mortar and Latex-Portland Cement Mortar

Dry-set or Latex-portland cement shall be used to install tile in accordance with ANSI A108.5. Latex portland cement shall be used when installing porcelain ceramic tile.

3.3.2 Organic Adhesive

Organic adhesive installation of ceramic tile shall conform to ANSI A108.4.

3.3.3 Furan Mortar and Grout

Furan mortar and grout installation shall conform to ANSI A108.8.

3.4 EXPANSION JOINTS

Joints shall be formed as indicated and sealed as specified in Section 07900a JOINT SEALING.

3.4.1 Walls

Expansion joints shall be provided at control joints in backing material. Wherever backing material changes, an expansion joint shall be installed to separate the different materials.

3.4.2 Floors

Expansion joints shall be provided over construction joints, control joints, and expansion joints in concrete slabs. Expansion joints shall be provided where tile abuts restraining surfaces such as perimeter walls, curbs and columns and at intervals of 24 to 36 feet each way in large interior floor areas and 12 to 16 feet each way in large exterior areas or areas exposed to direct sunlight or moisture. Expansion joints shall extend through setting-beds and fill.

3.5 CLEANING AND PROTECTING

Upon completion, tile surfaces shall be thoroughly cleaned in accordance with manufacturer's approved cleaning instructions. Acid shall not be used for cleaning glazed tile. Floor tile with resinous grout or with factory mixed grout shall be cleaned in accordance with instructions of the grout manufacturer. After the grout has set, tile wall surfaces shall be given a protective coat of a noncorrosive soap or other approved method of protection. Tiled floor areas shall be covered with building paper before foot traffic is permitted over the finished tile floors. Board walkways shall be laid on tiled floors that are to be continuously used as passageways by workmen. Damaged or defective tiles shall be replaced.

-- End of Section --

SECTION TABLE OF CONTENTS

DIVISION 09 - FINISHES

SECTION 09510A

ACOUSTICAL CEILINGS

04/01

PART 1 GENERAL

1.1 REFERENCES
1.2 SUBMITTALS
1.3 GENERAL REQUIREMENTS
1.4 DELIVERY AND STORAGE
1.5 ENVIRONMENTAL REQUIREMENTS
1.6 SCHEDULING
1.7 WARRANTY
1.8 EXTRA MATERIALS

PART 2 PRODUCTS

2.1 ACOUSTICAL UNITS
2.1.1 Units for Exposed-Grid System
2.2 SUSPENSION SYSTEM
2.3 HANGERS
2.4 FINISHES
2.5 COLORS AND PATTERNS
2.6 CEILING ATTENUATION CLASS AND TEST

PART 3 EXECUTION

3.1 INSTALLATION
3.1.1 Suspension System
3.1.1.1 Plumb Hangers
3.1.1.2 Splayed Hangers
3.1.2 Wall Molding
3.1.3 Acoustical Units
3.2 CLEANING
3.4 RECLAMATION PROCEDURES

-- End of Section Table of Contents --

SECTION 09510A

ACOUSTICAL CEILINGS
04/01

PART 1 GENERAL

1.1 REFERENCES

The publications listed below form a part of this specification to the extent referenced. The publications are referred to in the text by basic designation only.

AMERICAN SOCIETY FOR TESTING AND MATERIALS (ASTM)

ASTM C 635	(2000) Manufacture, Performance, and Testing of Metal Suspension Systems for Acoustical Tile and Lay-In Panel Ceilings
ASTM C 636	(1996) Installation of Metal Ceiling Suspension Systems for Acoustical Tile and Lay-In Panels
ASTM E 580	(2000) Application of Ceiling Suspension Systems for Acoustical Tile and Lay-In Panels in Areas Requiring Seismic Restraint
ASTM E 1264	(1998) Standard Classification for Acoustical Ceiling Products
ASTM E 1414	(2000) Standard Test for Airborne Sound Attenuation Between Rooms Sharing a Common Ceiling Plenum

U.S. ARMY CORPS OF ENGINEERS (USACE)

TI 809-04	(1998) Seismic Design for Buildings

UNDERWRITERS LABORATORIES (UL)

UL Fire Resist Dir	(1999) Fire Resistance Directory (2 Vol.)

1.2 SUBMITTALS

Government approval is required for submittals with a "G" designation; submittals not having a "G" designation are for information only. When used, a designation following the "G" designation identifies the office that will review the submittal for the Government. The following shall be submitted in accordance with Section 01330 SUBMITTAL PROCEDURES:

SD-02 Shop Drawings

Approved Detail Drawings;

Drawings showing suspension system, method of anchoring and fastening, details, and reflected ceiling plan.

SD-03 Product Data

Acoustical Ceiling Systems;

Manufacturer's descriptive data, catalog cuts, and installation instructions. Submittals which do not provide adequate data for the product evaluation will be rejected.

SD-04 Samples

Acoustical Units;

Two samples of each type of acoustical unit and each type of suspension grid tee section showing texture, finish, and color.

SD-06 Test Reports

Ceiling Attenuation Class and Test;

Reports by an independent testing laboratory attesting that acoustical ceiling systems meet specified requirements. Data attesting to conformance of the proposed system to Underwriters Laboratories requirements for the fire endurance rating listed in UL Fire Resist Dir may be submitted in lieu of test reports.

SD-07 Certificates

Acoustical Units;

Certificate attesting that the mineral based acoustical units furnished for the project contains recycled material and showing an estimated percent of such material.

1.3 GENERAL REQUIREMENTS

Acoustical treatment shall consist of sound controlling units mechanically mounted on a ceiling suspension system. The unit size, texture, finish, and color shall be as specified. The location and extent of acoustical treatment shall be as shown on the approved detail drawings. Reclamation of mineral fiber acoustical ceiling panels to be removed from the job site shall be in accordance with paragraph RECLAMATION PROCEDURES.

1.4 DELIVERY AND STORAGE

Materials shall be delivered to the site in the manufacturer's original unopened containers with brand name and type clearly marked. Materials shall be carefully handled and stored in dry, watertight enclosures. Immediately before installation, acoustical units shall be stored for not less than 24 hours at the same temperature and relative humidity as the space where they will be installed in order to assure proper temperature and moisture acclimation.

1.5 ENVIRONMENTAL REQUIREMENTS

A uniform temperature of not less than 60 degrees F nor more than 85 degrees F and a relative humidity of not more than 70 percent shall be maintained before, during, and after installation of acoustical units.

1.6 SCHEDULING

Interior finish work such as plastering, concrete and terrazzo work shall be complete and dry before installation. Mechanical, electrical, and other work above the ceiling line shall be completed and heating, ventilating, and air conditioning systems shall be installed and operating in order to maintain temperature and humidity requirements.

1.7 WARRANTY

Manufacturer's standard performance guarantees or warranties that extend beyond a one year period shall be provided. Standard performance guarantee or warranty shall contain an agreement to repair or replace acoustical panels that fail within the warranty period. Failures include, but are not limited to, sagging and warping of panels; rusting and manufacturers defects of grid system.

1.8 EXTRA MATERIALS

Spare tiles of each color shall be furnished at the rate of 20 tiles for each 1000 tiles installed. Tiles shall be from the same lot as those installed.

PART 2 PRODUCTS

2.1 ACOUSTICAL UNITS

Acoustical units shall conform to EPA requirements in accordance with Section 01670 RECYCLED / RECOVERED MATERIALS. Acoustical units shall conform to ASTM E 1264, Class A, and the following requirements:

2.1.1 Units for Exposed-Grid System

Type: III (mineral fiber with painted finish). Type III acoustical units shall have a minimum recycled material content of 18 percent.

Minimum NRC: 0.55 when tested on mounting No. E-400

Pattern: E.

Nominal size: 24 BY 24 inches.

Edge detail: Tegular trim.

Finish: Factory-applied standard finish.

Minimum CAC: 40.

2.2 SUSPENSION SYSTEM

Suspension system shall be standard , and shall conform to ASTM C 635 for intermediate-duty systems. Surfaces exposed to view shall be aluminum or steel with a factory-applied white baked-enamel finish. Wall molding shall have a flange of not less than 15/16 inch. Inside and outside corner capsMitered corners shall be provided. Suspended ceiling framing system shall have the capability to support the finished ceiling, light fixtures, air diffusers, and accessories, as shown. The suspension system shall have a maximum deflection of 1/360 of span length. Suspension shall comply with force protection requirements by incorporating seismic details and guidance in TI 809-04 and ASTM E 580 and as shown on the drawings.

2.3 HANGERS

Hangers shall be galvanized steel wire. Hangers and attachment shall support a minimum 300 pound ultimate vertical load without failure of supporting material or attachment.

2.4 FINISHES

Acoustical units and suspension system members shall have manufacturer's standard textures, patterns and finishes as specified. Ceiling suspension system components shall be treated to inhibit corrosion.

2.5 COLORS AND PATTERNS

Colors and patterns for acoustical units and suspension system components shall be as specified in Section 09915 COLOR SCHEDULE.

2.6 CEILING ATTENUATION CLASS AND TEST

Ceiling attenuation class (CAC) range of acoustical units, when required, shall be determined in accordance with ASTM E 1414. Test ceiling shall be continuous at the partition and shall be assembled in the suspension system in the same manner that the ceiling will be installed on the project. System shall be tested with all acoustical units installed.

PART 3 EXECUTION

3.1 INSTALLATION

Acoustical work shall be provided complete with necessary fastenings, clips, and other accessories required for a complete installation. Mechanical fastenings shall not be exposed in the finished work. Hangers shall be laid out for each individual room or space. Hangers shall be placed to support framing around beams, ducts, columns, grilles, and other penetrations through ceilings. Main runners and carrying channels shall be kept clear of abutting walls and partitions. At least two main runners shall be provided for each ceiling span. Wherever required to bypass an object with the hanger wires, a subsuspension system shall be installed, so that all hanger wires will be plumb.

3.1.1 Suspension System

Suspension system shall be installed in accordance with ASTM C 636 and as specified herein. There shall be no hanger wires or other loads suspended from underside of steel decking.

3.1.1.1 Plumb Hangers

Hangers shall be plumb and shall not press against insulation covering ducts and pipes.

3.1.1.2 Splayed Hangers

Where hangers must be splayed (sloped or slanted) around obstructions, the resulting horizontal force shall be offset by bracing, countersplaying, or other acceptable means.

3.1.2 Wall Molding

Wall molding shall be provided where ceilings abut vertical surfaces. Wall molding shall be secured not more than 3 inches from ends of each length and not more than 16 inches on centers between end fastenings. Wall molding springs shall be provided at each acoustical unit in semi-exposed or concealed systems.

3.1.3 Acoustical Units

Acoustical units shall be installed in accordance with the approved installation instructions of the manufacturer. Edges of acoustical units shall be in close contact with metal supports, with each other, and in true alignment. Acoustical units shall be arranged so that units less than one-half width are minimized. Units in exposed-grid system shall be held in place with manufacturer's standard hold-down clips, if units weigh less than 1 psf or if required for fire resistance rating.

3.2 CLEANING

Following installation, dirty or discolored surfaces of acoustical units shall be cleaned and left free from defects. Units that are damaged or improperly installed shall be removed and new units provided as directed.

3.4 RECLAMATION PROCEDURES

Ceiling tile, designated for recycling by the Contracting Officer, shall be neatly stacked on 4 by 4 foot pallets not higher than 4 foot. Panels shall be completely dry. Pallets shall then be shrink wrapped and symmetrically stacked on top of each other without falling over. Disposal shall be in accordance with Section 02013 ENVIRONMENTAL PROTECTION DURING CONSTRUCTION.

-- End of Section --

SECTION TABLE OF CONTENTS

DIVISION 09 - FINISHES

SECTION 09650A

RESILIENT FLOORING

07/96

PART 1 GENERAL

1.1 REFERENCES
1.2 FIRE RESISTANCE REQUIREMENTS
1.3 SUBMITTALS
1.4 DELIVERY AND STORAGE
1.5 ENVIRONMENTAL REQUIREMENTS
1.6 SCHEDULING
1.7 WARRANTY
1.8 EXTRA MATERIALS

PART 2 PRODUCTS

2.1 VINYL-COMPOSITION TILE
2.2 RESILIENT BASE
2.3 ADHESIVE
2.4 POLISH
2.5 CAULKING AND SEALANTS
2.6 MANUFACTURER'S COLOR AND TEXTURE

PART 3 EXECUTION

3.1 EXAMINATION/VERIFICATION OF CONDITIONS
3.2 SURFACE PREPARATION
3.3 MOISTURE TEST
3.4 INSTALLATION OF VINYL-COMPOSITION
3.5 INSTALLATION OF RESILIENT BASE
3.6 CLEANING
3.7 PROTECTION

-- End of Section Table of Contents --

SECTION 09650A

RESILIENT FLOORING
07/96

PART 1 GENERAL

1.1 REFERENCES

The publications listed below form a part of this specification to the extent referenced. The publications are referred to in the text by basic designation only.

AMERICAN SOCIETY FOR TESTING AND MATERIALS (ASTM)

ASTM D 4078	(1992; R 1996) Water Emulsion Floor Polish
ASTM E 662	(1997) Specific Optical Density of Smoke Generated by Solid Materials
ASTM F 1066	(1999) Vinyl Composition Floor Tile

1.2 FIRE RESISTANCE REQUIREMENTS

The smoke density rating shall be less than 450 when tested in accordance with ASTM E 662.

1.3 SUBMITTALS

Government approval is required for submittals with a "G" designation; submittals not having a "G" designation are for information only. When used, a designation following the "G" designation identifies the office that will review the submittal for the Government. The following shall be submitted in accordance with Section 01330 SUBMITTAL PROCEDURES:

SD-03 Product Data

Resilient Flooring and Accessories; G-AE

Manufacturer's descriptive data and installation instructions including cleaning and maintenance instructions.

SD-04 Samples

Flooring; G-AE

Three samples of each indicated color and type of flooring and base. Sample size shall be minimum 2-1/2 x 4 inches.

SD-06 Test Reports

Moisture Test

Copies of test reports showing that representative product samples of the flooring proposed for use have been tested by an independent testing laboratory within the past three years or when formulation change occurred and conforms to the requirements specified.

1.4 DELIVERY AND STORAGE

Materials shall be delivered to the building site in original unopened containers bearing the manufacturer's name, project identification, and handling instructions. Materials shall be stored in a clean dry area with temperature maintained above 70 degrees F for 2 days prior to installation, and shall be stacked according to manufacturer's recommendations. Materials shall be protected from the direct flow of heat from hot-air registers, radiators and other heating fixtures and appliances.

1.5 ENVIRONMENTAL REQUIREMENTS

Areas to receive resilient flooring shall be maintained at a temperature above 70 degrees F and below 100 degrees F for 2 days before application, during application and 2 days after application. A minimum temperature of 55 degrees F shall be maintained thereafter.

1.6 SCHEDULING

Resilient flooring application shall be scheduled after the completion of other work which would damage the finished surface of the flooring.

1.7 WARRANTY

Manufacturer's standard performance guarantees or warranties that extend beyond a one year period shall be provided.

1.8 EXTRA MATERIALS

Extra flooring material of each color and pattern shall be furnished at the rate of 5 tiles for each 1000 tiles installed. Extra materials shall be from the same lot as those installed. Extra base material composed of 20 linear feet of each color shall be furnished.

PART 2 PRODUCTS

2.1 VINYL-COMPOSITION TILE

Vinyl-composition tile shall conform to ASTM F 1066, Class 2,(through pattern tile), Composition 1, asbestos-free, and shall be 12 inches square and 1/8 inch thick. Tile shall have the color and pattern uniformly distributed throughout the thickness of the tile. Flooring in any one continuous area shall be from the same lot and shall have the same shade and pattern.

2.2 RESILIENT BASE

Base shall be manufacturers standard rubber or vinyl, straight style (installed with carpet) coved style (installed with resilient flooring). Base shall be 4 inches high and a minimum 1/8 inch thick. Job Formed corners shall be furnished.

2.3 ADHESIVE

Adhesive for flooring and wall base shall be as recommended by the flooring manufacturer.

2.4 POLISH

Polish shall conform to ASTM D 4078.

2.5 CAULKING AND SEALANTS

Caulking and sealants shall be in accordance with Section 07900a JOINT SEALING.

2.6 MANUFACTURER'S COLOR AND TEXTURE

Color and texture shall be in accordance with Section 09915 COLOR SCHEDULE.

PART 3 EXECUTION

3.1 EXAMINATION/VERIFICATION OF CONDITIONS

The Contractor shall examine and verify that site conditions are in agreement with the design package and shall report all conditions that will prevent a proper installation. The Contractor shall not take any corrective action without written permission from the Government.

3.2 SURFACE PREPARATION

Flooring shall be in a smooth, true, level plane, except where indicated as sloped. Before any work under this section is begun, all defects such as rough or scaling concrete, low spots, high spots, and uneven surfaces shall have been corrected, and all damaged portions of concrete slabs shall have been repaired as recommended by the flooring manufacturer. Concrete curing compounds, other than the type that does not adversely affect adhesion, shall be entirely removed from the slabs. Paint, varnish, oils, release agents, sealers, waxers, and adhesives shall be removed, as recommended by the flooring manufacturer.

3.3 MOISTURE TEST

The suitability of the concrete subfloor for receiving the resilient flooring with regard to moisture content shall be determined by a moisture test as recommended by the flooring manufacturer.

3.4 INSTALLATION OF VINYL-COMPOSITION

Tile flooring shall be installed with adhesive in accordance with the manufacturer's installation instructions. Tile lines and joints shall be kept square, symmetrical, tight, and even. Edge width shall vary as necessary to maintain full-size tiles in the field, but no edge tile shall be less than one-half the field tile size, except where irregular shaped rooms make it impossible. Flooring shall be cut to, and fitted around, all permanent fixtures, built-in furniture and cabinets, pipes, and outlets. Edge tile shall be cut, fitted, and scribed to walls and partitions after field flooring has been applied.

3.5 INSTALLATION OF RESILIENT BASE

Wall base shall be installed with adhesive in accordance with the manufacturer's written instructions. Base joints shall be tight and base shall be even with adjacent resilient flooring. Voids along the top edge of base at masonry walls shall be filled with caulk.

3.6 CLEANING

Immediately upon completion of installation of tile in a room or an area, flooring and adjacent surfaces shall be cleaned to remove all surplus adhesive. After installation, flooring shall be washed with a cleaning solution, rinsed thoroughly with clear cold water, and given two coats of polish in accordance with manufacturers written instructions. After each polish coat, floors shall be buffed to an even luster with an electric polishing machine.

3.7 PROTECTION

From the time of laying until acceptance, flooring shall be protected from damage as recommended by the flooring manufacturer. Flooring which becomes damaged, loose, broken, or curled shall be removed and replaced.

-- End of Section --

SECTION TABLE OF CONTENTS

DIVISION 09 - FINISHES

SECTION 09670A

INDUSTRIAL RESIN-BASED FLOORING

04/01

PART 1 GENERAL

1.1 REFERENCES
1.2 SUBMITTALS
1.3 QUALIFICATION OF APPLICATOR
1.4 DELIVERY AND STORAGE
1.5 ENVIRONMENTAL REQUIREMENTS

PART 2 PRODUCTS

2.1 CONDUCTIVE SPARKPROOF INDUSTRIAL RESIN-BASED FLOORING
2.2 CHEMICAL RESISTANCE
2.3 PRIMER
2.4 RESIN
2.5 FILLERS
2.6 SEALER
2.7 ANTIMICROBIAL
2.8 WALL BASE
2.8.1 Self-Coving
2.9 COLOR

PART 3 EXECUTION

3.1 PREPARATION OF CONCRETE SUBFLOOR
3.2 MIXING, PROPORTIONING, AND INSTALLING
3.3 TESTING
3.3.1 Electrical Resistance
3.3.2 Spark Resistance
3.4 PROTECTION

-- End of Section Table of Contents --

SECTION 09670A

INDUSTRIAL RESIN-BASED FLOORING
04/01

PART 1 GENERAL

1.1 REFERENCES

The publications listed below form a part of this specification to the extent referenced. The publications are referred to in the text by basic designation only.

AMERICAN SOCIETY FOR TESTING AND MATERIALS (ASTM)

ASTM C 722 (1994) Chemical-Resistant Resin Monolithic Surfacings

NATIONAL FIRE PROTECTION ASSOCIATION (NFPA)

NFPA 99 (1999) Health Care Facilities

1.2 SUBMITTALS

Government approval is required for submittals with a "G" designation; submittals not having a "G" designation are for information only. When used, a designation following the "G" designation identifies the office that will review the submittal for the Government. The following shall be submitted in accordance with Section 01330 SUBMITTAL PROCEDURES:

SD-02 Shop Drawings

Industrial Resin-Based Flooring; G-AE

Drawings indicating the type and layout of the floor system.

SD-03 Product Data

Resin Manufacturer's Instructions; G-AE
Installation; G-AE

Industrial resin-based flooring manufacturer's descriptive data, mixing, proportioning, and installation instructions. Maintenance literature for resinous flooring shall be included.

SD-04 Samples

Industrial Resin-Based Flooring; G-AE

Three 6 x 6 inches, (minimum) samples of industrial resinous flooring.

SD-06 Test Reports

Testing;

Reports of tests for conductive sparkproof flooring, including analysis and interpretation of test results. Each report shall be properly identified. The test methods used shall be identified and the

test results shall be recorded.

SD-07 Certificates

Industrial Resin-Based Flooring;
Qualification of Applicator;

Certificates indicating conformance with specified requirements and flooring manufacturer's approval of the flooring applicator. Certificate from an approved laboratory showing that the resinous floor coating has been tested and meets the requirements specified.

1.3 QUALIFICATION OF APPLICATOR

Applicator shall be approved by the flooring manufacturer and shall have a minimum of 5 years experience in the application of the materials to be used.

1.4 DELIVERY AND STORAGE

Materials shall be delivered to the project site in manufacturer's original unopened containers. Materials shall be kept in a clean, dry, area with temperatures controlled between 50 to 90 degrees F.

1.5 ENVIRONMENTAL REQUIREMENTS

Areas to receive industrial resin-based flooring shall have the slab and atmosphere maintained at a temperature above 50 degrees F for 2 days prior to installation and for 7 days following installation.

PART 2 PRODUCTS

2.1 CONDUCTIVE SPARKPROOF INDUSTRIAL RESIN-BASED FLOORING

Conductive sparkproof industrial resin-based flooring system shall be trowel or spray applied 1/4 inch thick, epoxy, polyester, or other resinous material conforming to ASTM C 722with Type A surfacings (chemical resistance and moderate to heavy traffic resistance). Chemical resistance shall be as indicated.

2.2 CHEMICAL RESISTANCE

Industrial resin-based flooring shall be chemically resistant based on a 7 day total immersion test for the following chemicals: Sulfuric acid at 70 percent solution.

2.3 PRIMER

Primer shall be a material recommended by the industrial resin-based flooring manufacturer which will penetrate the pores of the substrate and bond with the topping to form a permanent monolithic bond between the substrate and the topping.

2.4 RESIN

Resin shall be suitable for the type application indicated.

2.5 FILLERS

Fillers, if required, shall be inert silica, quartz or other hard aggregate material as recommended by the flooring manufacturer. Fillers shall be furnished in the quantity necessary to impart the required color and physical characteristics. The filler shall contain sufficient fines to provide an even-textured, nonslip type of surface on the finished topping.

2.6 SEALER

Sealer shall be a product recommended by the industrial resin-based flooring manufacturer. When applied to the resin topping and dry, it shall be nonslip and resistant to staining.

2.7 ANTIMICROBIAL

Industrial resin-based flooring shall be treated to be resistant to fungi and bacteria.

2.8 WALL BASE

2.8.1 Self-Coving

Self-coving shall consist of industrial resin-based flooring coved up at the base 6 inches high. Coved base shall be the same thickness as the flooring.

2.9 COLOR

Color shall be in accordance with Section 09915 COLOR SCHEDULE.

PART 3 EXECUTION

3.1 PREPARATION OF CONCRETE SUBFLOOR

Installation of the floor topping shall not commence until the concrete substrate is at least 28 days old. The concrete surfaces shall be prepared in accordance with the resin manufacturer's instructions.

3.2 MIXING, PROPORTIONING, AND INSTALLING

Mixing, proportioning, and installing shall be in accordance with the approved instructions of the manufacturer.

3.3 TESTING

3.3.1 Electrical Resistance

Between 30 and 45 days after flooring installation is completed, and prior to its use, the flooring shall be tested in accordance with paragraph 12-4.1.3.8(b)(7) of NFPA 99. The resistance of the floor at any one location shall be more than 5,000 ohms in areas with 110 volts service, more than 10,000 ohms in areas with 220 volt service, and average less than 1,000,000 ohms and more than 25,000 ohms in all areas. Tests shall be made by a technician experienced in such work.

3.3.2 Spark Resistance

The floor shall be tested for spark resistance by stroking the floor vigorously with a 12 inch hardened steel file in a 3 foot arc. The test shall be performed for each 80 square feet of floor area. Tests shall be made in a darkened space and only when the relative humidity of the atmosphere within the space does not exceed 50 percent. The floor shall not produce a spark when tested under these conditions.

3.4 PROTECTION

The resinous flooring shall be covered and protected from damage until completion of the work of all other trades.

-- End of Section --

SECTION TABLE OF CONTENTS

DIVISION 09 - FINISHES

SECTION 09680A

CARPET

05/01

PART 1 GENERAL

1.1 REFERENCES
1.2 SUBMITTALS
1.3 REGULATORY REQUIREMENTS
1.4 DELIVERY AND STORAGE
1.5 ENVIRONMENTAL REQUIREMENTS
1.6 WARRANTY
1.7 EXTRA MATERIAL

PART 2 PRODUCTS

2.1 CARPET TYPE
2.1.1 Physical Characteristics
2.1.2 Performance Requirements
2.2 ADHESIVES AND CONCRETE PRIMER
2.3 MOLDING
2.4 TAPE
2.5 COLOR, TEXTURE, AND PATTERN

PART 3 EXECUTION

3.1 SURFACE PREPARATION
3.2 MOISTURE AND ALKALINITY TESTS
3.3 PREPARATION OF CONCRETE SUBFLOOR
3.4 INSTALLATION
3.4.1 Broadloom Installation
3.5 CLEANING AND PROTECTION
3.5.1 Cleaning
3.5.2 Protection
3.6 REMNANTS

-- End of Section Table of Contents --

SECTION 09680A

CARPET
05/01

PART 1 GENERAL

1.1 REFERENCES

The publications listed below form a part of this specification to the extent referenced. The publications are referred to in the text by basic designation only.

AMERICAN ASSOCIATION OF TEXTILE CHEMISTS AND COLORISTS (AATCC)

AATCC TM 16	(1998) Test Method: Colorfastness to Light
AATCC TM 134	(1996) Test Method: Electrostatic Propensity of Carpets
AATCC TM 165	(1999) Test Method: Colorfastness to Crocking: Carpets - AATCC Crockmeter Method

AMERICAN SOCIETY FOR TESTING AND MATERIALS (ASTM)

ASTM D 418	(1993; R 1997) Pile Yarn Floor Covering Construction
ASTM E 648	(2000) Critical Radiant Flux of Floor-Covering Systems Using a Radiant Heat Energy Source

CARPET AND RUG INSTITUTE (CRI)

CRI 104	(1996) Commercial Carpet Installation Standard

CODE OF FEDERAL REGULATIONS (CFR)

16 CFR 1630	Standard for the Surface Flammability of Carpet and Rugs (FF 1-70)

1.2 SUBMITTALS

Government approval is required for submittals with a "G" designation; submittals not having a "G" designation are for information only. When used, a designation following the "G" designation identifies the office that will review the submittal for the Government. The following shall be submitted in accordance with Section 01330 SUBMITTAL PROCEDURES:

SD-02 Shop Drawings

Installation; G-RE
Molding; G-AE

Three copies of drawings indicating areas receiving carpet, carpet types, textures and patterns, direction of pile, location of seams, and locations of edge molding.

SD-03 Product Data

Carpet; G-AE

Manufacturer's catalog data and printed documentation stating physical characteristics, durability, resistance to fading, and flame resistance characteristics for each type of carpet material and installation accessory.

Surface Preparation; G-RE
Installation; G-RE

Three copies of the manufacturer's printed installation instructions for the carpet, including preparation of substrate, seaming techniques, and recommended adhesives and tapes.

SD-04 Samples

Carpet; G-AE
Molding; G-AE

a. Carpet: Three "Production Quality" samples 18 x 18 inches of each carpet proposed for use, showing quality, pattern, and color specified.

b. Vinyl or Aluminum Moldings: Two pieces of each type at least 12 inches long.

SD-06 Test Reports

Moisture and Alkalinity Tests; G-RE

Three copies of test reports of moisture and alkalinity content of concrete slab stating date of test, person conducting the test, and the area tested.

SD-07 Certificates

Carpet

Certificates of compliance from a laboratory accredited by the National Laboratory Accreditation Program of the National Institute of Standards and Technology attesting that each type of carpet and carpet with cushion material conforms to the standards specified.

SD-10 Operation and Maintenance Data

Carpet
Cleaning and Protection

Three copies of carpet manufacturer's maintenance instructions describing recommended type of cleaning equipment and material, spotting and cleaning methods, and cleaning cycles.

1.3 REGULATORY REQUIREMENTS

Carpet and adhesives shall bear the Carpet and Rug Institute (CRI) Indoor Air Quality (IAQ) label or demonstrate compliance with testing criteria and frequencies through independent laboratory test results. Carpet type bearing the label will indicate that the carpet has been tested and meets the criteria of the CRI IAQ Carpet Testing Program, and minimizes the impact on indoor air quality. Where possible, product shall be purchased locally to reduce emissions of fossil fuels from transporting.

1.4 DELIVERY AND STORAGE

Materials shall be delivered to the site in the manufacturer's original wrappings and packages clearly labeled with the manufacturer's name, brand name, size, dye lot number, and related information. Materials shall be stored in a clean, dry, well ventilated area, protected from damage and soiling, and shall be maintained at a temperature above 60 degrees F for 2 days prior to installation.

1.5 ENVIRONMENTAL REQUIREMENTS

Areas in which carpeting is to be installed shall be maintained at a temperature above 60 degrees F for 2 days before installation, during installation, and for 2 days after installation. A minimum temperature of 55 degrees F shall be maintained thereafter for the duration of the contract. Traffic or movement of furniture or equipment in carpeted area shall not be permitted for 24 hours after installation. Other work which would damage the carpet shall be completed prior to installation of carpet.

1.6 WARRANTY

Manufacturer's standard performance guarantees or warranties including minimum ten (10) year wear warranty, two (2) year material and workmanship and ten (10) year tuft bind and delamination.

1.7 EXTRA MATERIAL

Extra material from same dye lot consisting of full width continuous broadloom and shall be provided for future maintenance. A minimum of 3 percent of total square yards of carpet shall be provided.

PART 2 PRODUCTS

2.1 CARPET TYPE

Carpet shall be first quality; free of visual blemishes, streaks, poorly dyed areas, fuzzing of pile yarn, spots or stains, and other physical and manufacturing defects. Carpet materials and treatments shall be reasonably nonallergenic and free of other recognized health hazards. All grade carpets shall have a static control construction which gives adequate durability and performance.

2.1.1 Physical Characteristics

Carpet shall comply with the following:

a. Carpet Construction: Tufted.

b. Type: Broadloom 12 feet minimum usable carpet width.

c. Pile Type: Multilevel loop.

d. Pile Fiber: Commercial 100% branded (federally registered trademark) nylon continuous filament.

e. Pile or Wire Height: Minimum .156 average inch in accordance with ASTM D 418.

f. Gauge or Pitch: Minimum 5/64 inch in accordance with ASTM D 418.

g. Stitches or Rows/Wires: Minimum 10 per square inch.

h. Finished Pile Yarn Weight: Minimum 30 ounces per square yard. This

does not include weight of backings. Weight shall be determined in accordance with ASTM D 418.

i. Pile Density: Minimum 6920.

j. Dye Method: Solution dyed/Space dyed.

k. Backing Materials: Primary backing materials shall be those customarily used and accepted by the trade for each type of carpet. Secondary backing to suit project requirements shall be those customarily used and accepted by the trade for each type of carpet, except when a special unitary back designed for gluedown is provided.

2.1.2 Performance Requirements

a. Static Control: Static control shall be provided to permanently control static buildup to less than 3.5 kV when tested at 20 percent relative humidity and 70 degrees F in accordance with AATCC TM 134.

b. Flammability and Critical Radiant Flux Requirements: Carpet shall comply with 16 CFR 1630. Carpet in corridors and exits shall have a minimum average critical radiant flux of 0.22 watts per square centimeter when tested in accordance with ASTM E 648.

c. Tuft Bind: Tuft bind force required to pull a tuft or loop free from carpet backing shall be a minimum 10 pound average force for loop pile.

d. Colorfastness to Crocking: Dry and wet crocking shall comply with AATCC TM 165 and shall have a Class 4 minimum rating on the AATCC Color Transference Chart for all colors.

e. Colorfastness to Light: Colorfastness to light shall comply with AATCC TM 16, Test Option E "Water-Cooled Xenon-Arc Lamp, Continuous Light" and shall have a minimum 4 grey scale rating after 40 hours.

f. Delamination Strength: Delamination strength for tufted carpet with a secondary back shall be minimum of 2.5 lbs./inch.

2.2 ADHESIVES AND CONCRETE PRIMER

Adhesives and concrete primers for installation of carpet shall be waterproof, nonflammable, meet local air-quality standards, and shall be as required by the carpet manufacturer. Seam adhesive shall be waterproof, nonflammable, and nonstaining as recommended by the carpet manufacturer.

2.3 MOLDING

Vinyl molding shall be heavy-duty and designed for the type of carpet being installed. Floor flange shall be a minimum 2 inches wide. Color shall be same as base color.

2.4 TAPE

Tape for seams shall be as recommended by the carpet manufacturer for the type of seam used in installation.

2.5 COLOR, TEXTURE, AND PATTERN

Color, texture, and pattern shall be in accordance with Section 09915 COLOR SCHEDULE.

PART 3 EXECUTION

3.1 SURFACE PREPARATION

Carpet shall not be installed on surfaces that are unsuitable and will prevent a proper installation. Holes, cracks, depressions, or rough areas shall be repaired using material recommended by the carpet or adhesive manufacturer. Floor shall be free of any foreign materials and swept broom clean. Before beginning work, subfloor shall be tested with glue and carpet to determine "open time" and bond.

3.2 MOISTURE AND ALKALINITY TESTS

Concrete slab shall be tested for moisture content and excessive alkalinity in accordance with CRI 104.

3.3 PREPARATION OF CONCRETE SUBFLOOR

Installation of the carpeting shall not commence until concrete substrate is at least 90 days old. The concrete surfaces shall be prepared in accordance with instructions of the carpet manufacturer. Type of concrete sealer, when required, shall be compatible with the carpet.

3.4 INSTALLATION

All work shall be performed by installers who are CFI certified (International Certified Floorcovering Installer Association), or manufacturer's approved installers. Installation shall be in accordance with the manufacturer's instructions and CRI 104. Edges of carpet meeting hard surface flooring shall be protected with molding; installation shall be in accordance with the molding manufacturer's instructions.

3.4.1 Broadloom Installation

Broadloom carpet shall be installed direct glue down and shall be smooth, uniform, and secure, with a minimum of seams. Seams shall be uniform, unnoticeable, and treated with a seam adhesive. Side seams shall be run toward the light where practical and where such layout does not increase the number of seams. Breadths shall be installed parallel, with carpet pile in the same direction. Patterns shall be accurately matched. Cutouts, as at door jambs, columns and ducts shall be neatly cut and fitted securely. Seams at doorways shall be located parallel to and centered directly under doors. Seams shall not be made perpendicular to doors or at pivot points. Seams at changes in directions of corridors shall follow the wall line parallel to the carpet direction. Corridors with widths less than 6 feet shall have the carpet laid lengthwise down the corridors.

3.5 CLEANING AND PROTECTION

3.5.1 Cleaning

After installation of the carpet, debris, scraps, and other foreign matter shall be removed. Soiled spots and adhesive shall be removed from the face of the carpet with appropriate spot remover. Protruding face yarn shall be cut off and removed. Carpet shall be vacuumed clean.

3.5.2 Protection

The installed carpet shall be protected from soiling and damage with heavy, reinforced, nonstaining kraft paper, plywood, or hardboard sheets. Edges of kraft paper protection shall be lapped and secured to provide a continuous cover. Traffic shall be restricted for at least 45 hours. Protective covering shall be removed when directed by the Contracting Officer.

3.6 REMNANTS

Remnants remaining from the installation, consisting of scrap pieces more than 2 feet in dimension with more than 6 square feet total, shall be provided. Non-retained scraps shall be removed from site and recycled appropriately.

-- End of Section --

SECTION TABLE OF CONTENTS

DIVISION 09 - FINISHES

SECTION 09720

WALLCOVERINGS

07/02

PART 1 GENERAL

1.1 REFERENCES
1.2 SUBMITTALS
1.3 DELIVERY AND STORAGE
1.4 ENVIRONMENTAL REQUIREMENTS
1.5 WARRANTY
1.6 EXTRA MATERIALS

PART 2 PRODUCTS

2.1 WALLCOVERINGS
2.1.1 Wallcovering
2.2 CORNER GUARDS
2.3 PRIMER AND ADHESIVE
2.4 COLOR, TEXTURE, AND PATTERN

PART 3 EXECUTION

3.1 EXAMINATION
3.2 SURFACE PREPARATION
3.3 INSTALLATION
3.3.1 Vinyl Wallcovering
3.3.2 Corner Guards
3.4 CLEAN-UP

-- End of Section Table of Contents --

SECTION 09720

WALLCOVERINGS
07/02

PART 1 GENERAL

1.1 REFERENCES

The publications listed below form a part of this specification to the extent referenced. The publications are referred to in the text by basic designation only.

AMERICAN SOCIETY FOR TESTING AND MATERIALS (ASTM)

ASTM E 84	(2001) Surface Burning Characteristics of Building Materials

CHEMICAL FABRICS & FILM ASSOCIATION (CFFA)

CFFA-W-101-B	(1995) Vinyl Coated Fabric Wallcovering

1.2 SUBMITTALS

Government approval is required for submittals with a "G" designation; submittals not having a "G" designation are for information only or as otherwise designated. When used, a designation following the "G" designation identifies the office that will review the submittal for the Government. The following shall be submitted in accordance with Section 01330 SUBMITTAL PROCEDURES:

SD-03 Product Data

Wallcoverings; G-AE

Manufacturer's descriptive data, documentation stating physical characteristics, flame resistance, mildew and germicidal characteristics.

Installation; G-RE

Preprinted installation instructions for wallcovering and accessories.

Maintenance; G-RE
Clean-Up; G-RE

Preprinted cleaning and maintenance instructions for wallcovering and accessories.

SD-04 Samples

Wallcoverings; G-AE

Three samples of each indicated type, pattern, and color of wallcovering. Samples of wall covering shall be minimum 5 x 7 inches and of sufficient size to show pattern repeat. Three samples of each indicated type corner guard and wainscot cap.

SD-07 Certificates

Wallcoverings;

Manufacturer's statement attesting that the product furnished meets or exceeds specification requirements. The statement must; be dated after the award of the contract, state Contractor's name and address, name the project and location, and list the requirements being certified.

SD-08 Manufacturer's Instructions

Wallcoverings;

Submit complete procedures for an expert installation, including preparation of the substrate. Submit Material Safety Data Sheets (MSDS) for all primers, sealers, and adhesives to the Contracting Officer.

SD-10 Operation and Maintenance Data

Wallcoverings, Data Package 1;

Submit operation and maintenance data in accordance with Section 01781 OPERATION AND MAINTENANCE DATA.

1.3 DELIVERY AND STORAGE

Deliver the material to the site in manufacturer's original wrappings and packages and clearly labeled with the manufacturer's name, brand name, size, and other related information. Store in a safe, dry, clean, and well-ventilated area at temperatures not less than 50 degrees F and within a relative humidity range of 30 to 60 percent. Store wall covering material in a flat position and protect from damage, soiling, and moisture. Do not open containers until needed for installation, unless verification inspection is required.

1.4 ENVIRONMENTAL REQUIREMENTS

Minimum temperature of area to receive wall covering, before, during, and after installation, and requirements for conditioning adhesive and wall covering shall comply with the wall covering manufacturer's printed instructions. However, in no case shall the area temperature be less than 50 degrees F, 72 hours prior to, during installation, and until the adhesive is dry. Observe ventilation and safety procedures specified in the MSDS.

1.5 WARRANTY

Manufacturer's standard performance guarantees or warranties that extend beyond a one-year period shall be provided.

1.6 EXTRA MATERIALS

Provide one linear foot of full-width wall covering of each pattern and color for each 100 linear feet of wall covering installed. Extra stock shall be of the same manufacture, type, pattern, color, and lot number as the installed wall covering. Provide full rolls, packed for storage and marked with content, pattern, and color. Leave extra stock at the site at a location as directed.

PART 2 PRODUCTS

2.1 WALLCOVERINGS

Wallcoverings shall be material designed specifically for the specified use. The wallcovering shall contain a non-mercury based mildewcide. The wallcovering shall be type made without the use of cadmium based stabilizers.

Wallcovering shall have a Class A flame spread rating of 0-25 and smoke development rating of 0-50 when tested in accordance with ASTM E 84.

2.1.1 Wallcovering

Vinyl wallcovering shall meet Type II (Medium Duty - 13 to 21 ounces/sq. yd.) as per CFFA-W-101-B (minimum 20 ounces/lineal yd). Width of wallcovering shall be 52/54".

2.2 CORNER GUARDS

Corner guards shall be 3/32 inch thick and shall cover 3/4 inch each side of corner at right angles. Corner guards shall be clear from the same lot and color.

2.3 PRIMER AND ADHESIVE

Primer and adhesive shall be of a type recommended by the wallcovering manufacturer and shall contain a non-mercury based mildewcide. When substrate color variations show through vinyl wallcovering, a white pigmented primer as recommended by the wallcovering manufacturer shall be used to conceal the variations. Adhesive shall be strippable type. Adhesive to install cap shall be of a type recommended by the manufacturer of the wainscot cap.

2.4 COLOR, TEXTURE, AND PATTERN

Color, texture, and pattern shall be in accordance with Section 09915 COLOR SCHEDULE.

PART 3 EXECUTION

3.1 EXAMINATION

Contractor shall inspect all areas and conditions under which wallcoverings are to be installed. Contractor shall notify in writing of any conditions detrimental to the proper and timely completion of the installation. Work will proceed only when conditions have been corrected and accepted by the installer.

3.2 SURFACE PREPARATION

Wallcovering shall not be applied to surfaces that are rough, that contain stains that will bleed through the wallcovering, or that are otherwise unsuitable for proper installation. Cracks and holes shall be filled and rough spots shall be sanded smooth. Surfaces to receive wallcovering shall be thoroughly dry. Plaster surfaces shall age at least 30 days prior to installation of vinyl wallcoverings. Interior surfaces of new and existing gypsum wallboard shall be primed with a wallcovering primer in accordance with the manufacturer's instructions. As required, white primer shall be used when substrate color variations are visible through thin or light color wallcovering. Surface of walls shall be primed as required by manufacturer's instructions to permit ultimate removal of wallcovering from the wall surface. Primer shall be allowed to completely dry before adhesive application.

3.3 INSTALLATION

3.3.1 Vinyl Wallcovering

Wallcovering shall be installed in accordance with the manufacturer's installation instructions. Glue and adhesive spillage shall be immediately removed from wallcovering face and seams with a remover recommended by the manufacturer.

3.3.2 Corner Guards

Corner guards shall be installed on all exposed corners and in accordance with the manufacturer's printed instructions. Corner guards shall run from top of base to ceiling in a continuous length.

3.4 CLEAN-UP

Upon completion of the work, wallcovering shall be left clean and free of dirt, soiling, stain, or residual film. Surplus materials, rubbish, and debris resulting from the wallcovering installation shall be removed and area shall be left clean.

-- End of Section --

SECTION TABLE OF CONTENTS

DIVISION 09 - FINISHES

SECTION 09900

PAINTS AND COATINGS

02/02

PART 1 GENERAL

1.1 REFERENCES
1.2 SUBMITTALS
1.3 APPLICATOR'S QUALIFICATIONS
1.3.1 Contractor Qualification
1.4 QUALITY ASSURANCE
1.4.1 Field Samples and Tests
1.4.1.1 Sampling Procedure
1.4.1.2 Testing Procedure
1.5 REGULATORY REQUIREMENTS
1.5.1 Environmental Protection
1.5.2 Lead Content
1.5.3 Chromate Content
1.5.4 Asbestos Content
1.5.5 Mercury Content
1.5.6 Human Carcinogens
1.6 PACKAGING, LABELING, AND STORAGE
1.7 SAFETY AND HEALTH
1.7.1 Safety Methods Used During Coating Application
1.7.2 Toxic Materials
1.8 ENVIRONMENTAL CONDITIONS
1.8.1 Coatings
1.9 COLOR SELECTION
1.10 LOCATION AND SURFACE TYPE TO BE PAINTED
1.10.1 Painting Included
1.10.1.1 Exterior Painting
1.10.1.2 Interior Painting
1.10.2 Painting Excluded
1.10.3 Mechanical and Electrical Painting
1.10.3.1 Fire Extinguishing Sprinkler Systems
1.10.4 Definitions and Abbreviations
1.10.4.1 Qualification Testing
1.10.4.2 Batch Quality Conformance Testing
1.10.4.3 Coating
1.10.4.4 DFT or dft
1.10.4.5 DSD
1.10.4.6 EPP
1.10.4.7 EXT
1.10.4.8 INT
1.10.4.9 micron / microns
1.10.4.10 mil / mils
1.10.4.11 mm
1.10.4.12 MPI Gloss Levels
1.10.4.13 MPI System Number
1.10.4.14 Paint

1.10.4.15 REX
1.10.4.16 RIN

PART 2 PRODUCTS

2.1 MATERIALS

PART 3 EXECUTION

3.1 PROTECTION OF AREAS AND SPACES NOT TO BE PAINTED
3.2 SURFACE PREPARATION
3.3 PREPARATION OF METAL SURFACES
3.3.1 New Ferrous Surfaces
3.3.2 Final Ferrous Surface Condition:
3.3.3 Galvanized Surfaces
3.3.4 Non-Ferrous Metallic Surfaces
3.3.5 Terne-Coated Metal Surfaces
3.3.6 Existing Surfaces with a Bituminous or Mastic-Type Coating
3.4 PREPARATION OF CONCRETE AND CEMENTITIOUS SURFACE
3.4.1 Concrete and Masonry
3.4.2 Gypsum Board
3.5 PREPARATION OF WOOD AND PLYWOOD SURFACES
3.5.1 New Plywood and Wood Surfaces, Except Floors:
3.5.2 Interior Wood Surfaces, Stain Finish
3.6 APPLICATION
3.6.1 Coating Application
3.6.2 Mixing and Thinning of Paints
3.6.3 Coating Systems
3.7 COATING SYSTEMS FOR METAL
3.8 COATING SYSTEMS FOR CONCRETE AND CEMENTITIOUS SUBSTRATES
3.9 COATING SYSTEMS FOR WOOD AND PLYWOOD
3.10 PIPING IDENTIFICATION
3.11 INSPECTION AND ACCEPTANCE
3.12 PAINT TABLES
3.12.1 EXTERIOR PAINT TABLES
3.12.2 INTERIOR PAINT TABLES

-- End of Section Table of Contents --

SECTION 09900

PAINTS AND COATINGS
02/02

PART 1 GENERAL

1.1 REFERENCES

The publications listed below form a part of this specification to the extent referenced. The publications are referred to within the text by the basic designation only.

AMERICAN CONFERENCE OF GOVERNMENTAL INDUSTRIAL HYGIENISTS (ACGIH)

ACGIH Limit Values	(1991-1992) Threshold Limit Values (TLVs) for Chemical Substances and Physical Agents and Biological Exposure Indices (BEIs)
ACGIH TLV-DOC	Documentation of Threshold Limit Values and Biological Exposure Indices

AMERICAN SOCIETY FOR TESTING AND MATERIALS (ASTM)

ASTM D 235	Standard Specification for Mineral Spirits (Petroleum Spirits) (Hydrocarbon Dry Cleaning Solvent)
ASTM D 523	(1999) Standard Test Method for Specular Gloss
ASTM D 2092	(1995) Preparation of Zinc-Coated (Galvanized) Steel Surfaces for Painting
ASTM D 4263	(1983; R 1999) Indicating Moisture in Concrete by the Plastic Sheet Method
ASTM D 4444	(1998) Standard Test Methods for Use and Calibration of Hand-Held Moisture Meters
ASTM F 1869	(1998) Measuring Moisture Vapor Emission Rate of Concrete Subfloor Using Anhydrous Calcium Chloride

CODE OF FEDERAL REGULATIONS (CFR)

29 CFR 1910.1000	Air Contaminants

FEDERAL STANDARDS (FED-STD)

FED-STD-313	(Rev. C) Material Safety Data, Transportation Data and Disposal Data for Hazardous Materials Furnished to Government Activities

MASTER PAINTERS INSTITUTE (MPI)

MPI 1	(2001) Aluminum Paint
MPI 4	(2001) Interior/Exterior Latex Block Filler
MPI 11	(2001) Exterior Latex, Semi-Gloss
MPI 23	(2001) Surface Tolerant Metal Primer
MPI 26	(2001) Cementitious Galvanized Metal Primer
MPI 39	(2001) Interior Latex-based Wood Primer
MPI 42	(2001) Latex Stucco and Masonry Textured Coating
MPI 50	(2001) Interior Latex Primer Sealer
MPI 54	(2001) Interior Latex, Semi-Gloss
MPI 57	(2001) Interior Oil Modified Clear Urethane, Satin
MPI 77	(2001) Epoxy Cold Cured, Gloss
MPI 79	(2001) Marine Alkyd Metal Primer
MPI 90	(2001) Interior Wood Stain, Semi-Transparent
MPI 94	(2001) Exterior Alkyd, Semi-Gloss
MPI 95	(2001) Fast Drying Metal Primer
MPI 107	(2001) Rust Inhibitive Primer (Water-Based)
MPI 141	(2001) High Performance Semigloss Latex, White and Tints - Gloss Level 5

U.S. DEPARTMENT OF DEFENSE (DOD)

MIL-STD-101	(Rev. B) Color Code for Pipelines and for Compressed Gas Cylinders

SCIENTIFIC CERTIFICATION SYSTEMS (SCS)

SCS-EPP-SP01-01	(2001) Environmentally Preferable Product Specification for Architectural and Anti-Corrosive Paints

STEEL STRUCTURES PAINTING COUNCIL (SSPC)

SSPC PA 1	(2000) Shop, Field, and Maintenance Painting
SSPC PA 3	(1995) Safety in Paint Application
SSPC VIS 3	(1993) Visual Standard for Power- and Hand-Tool Cleaned Steel (Standard

	Reference Photographs)
SSPC SP 1	(1982) Solvent Cleaning
SSPC SP 2	(1995) Hand Tool Cleaning
SSPC SP 3	(1995) Power Tool Cleaning

1.2 SUBMITTALS

Government approval is required for submittals with a "G" designation; submittals not having a "G" designation are for information only or as otherwise designated. When used, a designation following the "G" designation identifies the office that will review the submittal for the Government. The following shall be submitted in accordance with Section 01330 SUBMITTAL PROCEDURES:

The current MPI, "Approved Product List" which lists paint by brand, label, product name and product code as of the date of contract award, will be used to determine compliance with the submittal requirements of this specification. The Contractor may choose to use a subsequent MPI "Approved Product List", however, only one list may be used for the entire contract and each coating system is to be from a single manufacturer. All coats on a particular substrate must be from a single manufacturer. No variation from the MPI Approved Products List is acceptable.

Samples of specified materials may be taken and tested for compliance with specification requirements.

In keeping with the intent of Executive Order 13101, "Greening the Government through Waste Prevention, Recycling, and Federal Acquisition", products certified by SCS as meeting SCS-EPP-SP01-01 shall be given preferential consideration over registered products. Products that are registered shall be given preferential consideration over products not carrying any EPP designation.

SD-02 Shop Drawings

Piping identification

Submit color stencil codes

SD-03 Product Data

Coating;

Manufacturer's Technical Data Sheets

SD-04 Samples

Color; G-AE

Submit paint samples, minimum 8" x 10".

SD-07 Certificates

Applicator's qualifications

Qualification Testing laboratory for coatings

SD-08 Manufacturer's Instructions

Application instructions

Mixing

Detailed mixing instructions, minimum and maximum application temperature and humidity, potlife, and curing and drying times between coats.

Manufacturer's Material Safety Data Sheets

Submit manufacturer's Material Safety Data Sheets for coatings, solvents, and other potentially hazardous materials, as defined in FED-STD-313.

SD-10 Operation and Maintenance Data

Coatings; G-RE

Preprinted cleaning and maintenance instructions for all coating systems shall be provided.

1.3 APPLICATOR'S QUALIFICATIONS

1.3.1 Contractor Qualification

Submit the name, address, telephone number, FAX number, and e-mail address of the contractor that will be performing all surface preparation and coating application. Submit evidence that key personnel have successfully performed surface preparation and application of coatings on a minimum of three similar projects within the past three years. List information by individual and include the following:

a. Name of individual and proposed position for this work.

b. Information about each previous assignment including:

Position or responsibility

Employer (if other than the Contractor)

Name of facility owner

Mailing address, telephone number, and telex number (if non-US) of facility owner

Name of individual in facility owner's organization who can be contacted as a reference

Location, size and description of structure

Dates work was carried out

Description of work carried out on structure

1.4 QUALITY ASSURANCE

1.4.1 Field Samples and Tests

The Contracting Officer may choose up to two coatings that have been delivered to the site to be tested at no cost to the Government. Take samples of each chosen product as specified in the paragraph "Sampling Procedures." Test each chosen product as specified in the paragraph "Testing Procedure." Products which do not conform, shall be removed from the job site and replaced with new products that confrom to the referenced specification. Testing of replacement products that failed initial testing shall be at no cost to the Government.

1.4.1.1 Sampling Procedure

The Contracting Officer will select paint at random from the products that have been delivered to the job site for sample testing. The Contractor shall provide one quart samples of the selected paint materials. The samples shall be taken in the presence of the Contracting Officer, and labeled, identifying each sample. Provide labels in accordance with the paragraph "Packaging, Labeling, and Storage" of this specification.

1.4.1.2 Testing Procedure

Provide Batch Quality Conformance Testing for specified products, as defined by and performed by MPI. As an alternative to Batch Quality Conformance Testing, the Contractor may provide Qualification Testing for specified products above to the appropriate MPI product specification, using the third-party laboratory approved under the paragraph "Qualification Testing" laboratory for coatings. The qualification testing lab report shall include the backup data and summary of the test results. The summary shall list all of the reference specification requirements and the result of each test. The summary shall clearly indicate whether the tested paint meets each test requirement. Note that Qualification Testing may take 4 to 6 weeks to perform, due to the extent of testing required.

Submit name, address, telephone number, FAX number, and e-mail address of the independent third party laboratory selected to perform testing of coating samples for compliance with specification requirements. Submit documentation that laboratory is regularly engaged in testing of paint samples for conformance with specifications, and that employees performing testing are qualified. If the Contractor chooses MPI to perform the Batch Quality Conformance testing, the above submittal information is not required, only a letter is required from the Contractor stating that MPI will perform the testing.

1.5 REGULATORY REQUIREMENTS

1.5.1 Environmental Protection

In addition to requirements specified elsewhere for environmental protection, provide coating materials that conform to the restrictions of the local Air Pollution Control District and regional jurisdiction. Notify Contracting Officer of any paint specified herein which fails to conform.

1.5.2 Lead Content

Do not use coatings having a lead content over 0.06 percent by weight of nonvolatile content.

1.5.3 Chromate Content

Do not use coatings containing zinc-chromate or strontium-chromate.

1.5.4 Asbestos Content

Materials shall not contain asbestos.

1.5.5 Mercury Content

Materials shall not contain mercury or mercury compounds.

1.5.6 Human Carcinogens

Materials shall not contain ACGIH Limit Values and ACGIH TLV-DOC confirmed human carcinogens (A1) or suspected human carcinogens (A2).

1.6 PACKAGING, LABELING, AND STORAGE

Paints shall be in sealed containers that legibly show the contract specification number, designation name, formula or specification number, batch number, color, quantity, date of manufacture, manufacturer's formulation number, manufacturer's directions including any warnings and special precautions, and name and address of manufacturer. Pigmented paints shall be furnished in containers not larger than 5 gallons. Paints and thinners shall be stored in accordance with the manufacturer's written directions, and as a minimum, stored off the ground, under cover, with sufficient ventilation to prevent the buildup of flammable vapors, and at temperatures between 40 to 95 degrees F.

1.7 SAFETY AND HEALTH

Apply coating materials using safety methods and equipment in accordance with the following:

Work shall comply with applicable Federal, State, and local laws and regulations, and with the ACCIDENT PREVENTION PLAN, including the Activity Hazard Analysis as specified in Section 01525,"Safety Requirements" and in Appendix A of EM 385-1-1. The Activity Hazard Analysis shall include analyses of the potential impact of painting operations on painting personnel and on others involved in and adjacent to the work zone.

1.7.1 Safety Methods Used During Coating Application

Comply with the requirements of SSPC PA 3.

1.7.2 Toxic Materials

To protect personnel from overexposure to toxic materials, conform to the most stringent guidance of:

a. The applicable manufacturer's Material Safety Data Sheets (MSDS) or local regulation.

b. 29 CFR 1910.1000.

c. ACGIH Limit Values, threshold limit values.

1.8 ENVIRONMENTAL CONDITIONS

1.8.1 Coatings

Do not apply coating when air or substrate conditions are:

a. Less than 5 degrees F above dew point;

b. Below 50 degrees F or over 95 degrees F, unless specifically pre-approved by the Contracting Officer and the product manufacturer. Under no circumstances shall application conditions exceed manufacturer recommendations.

1.9 COLOR SELECTION

Colors of finish coats shall be as specified in Section 09915 COLOR SCHEDULE. Manufacturers' names and color identification are used for the purpose of color identification only.

Tint each coat progressively darker to enable confirmation of the number of coats.

Color, texture, and pattern of wall coating systems shall be in accordance with Section 09915 COLOR SCHEDULE.

1.10 LOCATION AND SURFACE TYPE TO BE PAINTED

1.10.1 Painting Included

Where a space or surface is indicated to be painted, include the following unless indicated otherwise.

a. Surfaces behind portable objects and surface mounted articles readily detachable by removal of fasteners, such as screws and bolts.

b. New factory finished surfaces that require identification or color coding and factory finished surfaces that are damaged during performance of the work.

c. Existing coated surfaces that are damaged during performance of the work.

1.10.1.1 Exterior Painting

Includes new surfaces of the buildings and appurtenances as indicated.

1.10.1.2 Interior Painting

Includes new surfaces of the buildings and appurtenances as indicated. Where a space or surface is indicated to be painted, include the following items, unless indicated otherwise.

a. Exposed columns, girders, beams, joists, and metal deck; and

b. Other contiguous surfaces.

1.10.2 Painting Excluded

Do not paint the following unless indicated otherwise.

a. Surfaces concealed and made inaccessible by panelboards, fixed ductwork, machinery, and equipment fixed in place.

b. Surfaces in concealed spaces. Concealed spaces are defined as enclosed spaces above suspended ceilings, furred spaces, attic spaces, crawl spaces, elevator shafts and chases.

c. Steel to be embedded in concrete.

d. Copper, stainless steel, aluminum, brass, and lead except existing coated surfaces.

e. Hardware, fittings, and other factory finished items.

1.10.3 Mechanical and Electrical Painting

Includes field coating of interior and exterior new surfaces.

a. Where a space or surface is indicated to be painted, include the following items unless indicated otherwise.

(1) Exposed piping, conduit, and ductwork;

(2) Supports, hangers, air grilles, and registers;

(3) Miscellaneous metalwork and insulation coverings.

b. Do not paint the following, unless indicated otherwise:

(1) New zinc-coated, aluminum, and copper surfaces under insulation

(2) New aluminum jacket on piping

(3) New interior ferrous piping under insulation.

(4) Aluminum surfaces of louvers, door frames, and window frames.

1.10.3.1 Fire Extinguishing Sprinkler Systems

Clean, pretreat, prime, and paint new fire extinguishing sprinkler systems including valves, piping, conduit, hangers, supports, miscellaneous metalwork, and accessories. Apply coatings to clean, dry surfaces, using clean brushes. Clean the surfaces to remove dust, dirt, rust, and loose mill scale. Immediately after cleaning, provide the metal surfaces with one coat primer per schedules. Shield sprinkler heads with protective covering while painting is in progress. Upon completion of painting, remove protective covering from sprinkler heads. Remove sprinkler heads which have been painted and replace with new sprinkler heads. Provide primed surfaces with the following:

a. Piping in Unfinished Areas: Provide primed surfaces with one coat of red alkyd gloss enamel applied to a minimum dry film thickness of 1.0 mil in attic spaces, spaces above suspended ceilings, crawl spaces, pipe chases, mechanical equipment room, and spaces where walls or ceiling are not painted or not constructed of a

prefinished material. In lieu of red enamel finish coat, provide piping with 2 inch wide red enamel bands or self-adhering red plastic bands spaced at maximum of 20 foot intervals.

b. Piping in Finished Areas: Provide primed surfaces with two coats of paint to match adjacent surfaces, except provide valves and operating accessories with one coat of red alkyd gloss enamel applied to a minimum dry film thickness of 1.0 mil. Provide piping with 2 inch wide red enamel bands or self-adhering red plastic bands spaced at maximum of 20 foot intervals throughout the piping systems.

1.10.4 Definitions and Abbreviations

1.10.4.1 Qualification Testing

Qualification testing is the performance of all test requirements listed in the product specification. This testing is accomplished by MPI to qualify each product for the MPI Approved Product List, and may also be accomplished by Contractor's third party testing lab if an alternative to Batch Quality Conformance Testing by MPI is desired.

1.10.4.2 Batch Quality Conformance Testing

Batch quality conformance testing determines that the product provided is the same as the product qualified to the appropriate product specification. This testing shall only be accomplished by MPI testing lab.

1.10.4.3 Coating

A film or thin layer applied to a base material called a substrate. A coating may be a metal, alloy, paint, or solid/liquid suspensions on various substrates (metals, plastics, wood, paper, leather, cloth, etc.). They may be applied by electrolysis, vapor deposition, vacuum, or mechanical means such as brushing, spraying, calendering, and roller coating. A coating may be applied for aesthetic or protective purposes or both. The term "coating" as used herein includes emulsions, enamels, stains, varnishes, sealers, epoxies, and other coatings, whether used as primer, intermediate, or finish coat. The terms paint and coating are used interchangeably.

1.10.4.4 DFT or dft

Dry film thickness, the film thickness of the fully cured, dry paint or coating.

1.10.4.5 DSD

Degree of Surface Degradation, the MPI system of defining degree of surface degradation. Five (5) levels are generically defined under the Assessment sections in the MPI Maintenance Repainting Manual.

1.10.4.6 EPP

Environmentally Preferred Products, a standard for determining environmental preferability in support of Executive Order 13101.

1.10.4.7 EXT

MPI short term designation for an exterior coating system.

1.10.4.8 INT

MPI short term designation for an interior coating system.

1.10.4.9 micron / microns

The metric measurement for 0.001 mm or one/one-thousandth of a millimeter.

1.10.4.10 mil / mils

The English measurement for 0.001 in or one/one-thousandth of an inch, equal to 25.4 microns or 0.0254 mm.

1.10.4.11 mm

The metric measurement for millimeter, 0.001 meter or one/one-thousandth of a meter.

1.10.4.12 MPI Gloss Levels

MPI system of defining gloss. Seven (7) gloss levels (G1 to G7) are generically defined under the Evaluation sections of the MPI Manuals. Traditionally, Flat refers to G1/G2, Eggshell refers to G3, Semigloss refers to G5, and Gloss refers to G6.

Gloss levels are defined by MPI as follows:

Gloss Level	Description	Units @ 60 degrees	Units @ 85 degrees
G1	Matte or Flat	0 to 5	10 max
G2	Velvet	0 to 10	10 to 35
G3	Eggshell	10 to 25	10 to 35
G4	Satin	20 to 35	35 min
G5	Semi-Gloss	35 to 70	
G6	Gloss	70 to 85	
G7	High Gloss		

Gloss is tested in accordance with ASTM D 523. Historically, the Government has used Flat (G1 / G2), Eggshell (G3), Semi-Gloss (G5), and Gloss (G6).

1.10.4.13 MPI System Number

The MPI coating system number in each Division found in either the MPI Architectural Painting Specification Manual or the Maintenance Repainting Manual and defined as an exterior (EXT/REX) or interior system (INT/RIN). The Division number follows the CSI Master Format.

1.10.4.14 Paint

See Coating definition.

1.10.4.15 REX

MPI short term designation for an exterior coating system used in repainting projects or over existing coating systems.

1.10.4.16 RIN

MPI short term designation for an interior coating system used in repainting projects or over existing coating systems.

PART 2 PRODUCTS

2.1 MATERIALS

Conform to the coating specifications and standards referenced in PART 3. Submit manufacturer's technical data sheets for specified coatings and solvents.

PART 3 EXECUTION

3.1 PROTECTION OF AREAS AND SPACES NOT TO BE PAINTED

Prior to surface preparation and coating applications, remove, mask, or otherwise protect, hardware, hardware accessories, machined surfaces, radiator covers, plates, lighting fixtures, public and private property, and other such items not to be coated that are in contact with surfaces to be coated. Following completion of painting, workmen skilled in the trades involved shall reinstall removed items. Restore surfaces contaminated by coating materials, to original condition and repair damaged items.

3.2 SURFACE PREPARATION

Remove dirt, splinters, loose particles, grease, oil, disintegrated coatings, and other foreign matter and substances deleterious to coating performance as specified for each substrate before application of paint or surface treatments. Oil and grease shall be removed prior to mechanical cleaning. Cleaning shall be programmed so that dust and other contaminants will not fall on wet, newly painted surfaces. Exposed ferrous metals such as nail heads on or in contact with surfaces to be painted with water-thinned paints, shall be spot-primmed with a suitable corrosion-inhibitive primer capable of preventing flash rusting and compatible with the coating specified for the adjacent areas.

3.3 PREPARATION OF METAL SURFACES

3.3.1 New Ferrous Surfaces

a. Ferrous Surfaces including Shop-coated Surfaces and Small Areas That Contain Rust, Mill Scale and Other Foreign Substances: Solvent clean or detergent wash in accordance with SSPC SP 1 to remove oil and grease. Where shop coat is missing or damaged, clean according to SSPC SP 2 or SSPC SP 3. Shop-coated ferrous surfaces shall be protected from corrosion by treating and touching up corroded areas immediately upon detection.

(1) New interior ferrous piping under insulation.

3.3.2 Final Ferrous Surface Condition:

For tool cleaned surfaces, the requirements are stated in SSPC SP 2 and SSPC SP 3. As a visual reference, cleaned surfaces shall be similar to photographs in SSPC VIS 3.

3.3.3 Galvanized Surfaces

a. New Galvanized Surfaces With Only Dirt and Zinc Oxidation Products: Clean with solvent, steam, or non-alkaline detergent solution in accordance with SSPC SP 1. If the galvanized metal has been passivated or stabilized, the coating shall be completely removed by brush-off abrasive blast. New galvanized steel to be coated shall not be "passivated" or "stabilized" If the absence of hexavalent stain inhibitors is not documented, test as described in ASTM D 2092, Appendix X2, and remove by one of the methods described therein.

b. Galvanized with Slight Coating Deterioration or with Little or No Rusting: Water jetting to SSPC SP 12 WJ3 to remove loose coating from surfaces with less than 20 percent coating deterioration and no blistering, peeling, or cracking. Use inhibitor as recommended by the coating manufacturer to prevent rusting.

3.3.4 Non-Ferrous Metallic Surfaces

Aluminum and aluminum-alloy, lead, copper, and other nonferrous metal surfaces.

a. Surface Cleaning: Solvent clean in accordance with SSPC SP 1 and wash with mild non-alkaline detergent to remove dirt and water soluble contaminants.

3.3.5 Terne-Coated Metal Surfaces

Solvent clean surfaces with mineral spirits, ASTM D 235. Wipe dry with clean, dry cloths.

3.3.6 Existing Surfaces with a Bituminous or Mastic-Type Coating

Remove chalk, mildew, and other loose material by washing with a solution of 1/2 cup trisodium phosphate, 1/4 cup household detergent, one quart 5 percent sodium hypochlorite solution and 3 quarts of warm water.

3.4 PREPARATION OF CONCRETE AND CEMENTITIOUS SURFACE

3.4.1 Concrete and Masonry

a. Curing: Concrete and masonry surfaces shall be allowed to cure at least 30 days before painting, except concrete slab on grade, which shall be allowed to cure 90 days before painting.

b. Surface Cleaning: Remove the following deleterious substances.

(1) Dirt, Chalking, Grease, and Oil: Wash new surfaces with a solution composed of 1/2 cup trisodium phosphate, 1/4 cuphousehold detergent, and 4 quarts of warm water. Then rinse thoroughly with fresh water. For large areas, water blasting may be used.

(2) Fungus and Mold: Wash new surfaces with a solution composed of 1/2 cup trisodium phosphate, 1/4 cup household detergent, 1 quart 5 percent sodium hypochlorite solution and 3 quarts of warm water. Rinse thoroughly with fresh water.

(3) New interior ferrous piping under insulation.

(4) Paint and Loose Particles: Remove by wire brushing.

(5) Efflorescence: Remove by scraping or wire brushing followed by washing with a 5 to 10 percent by weight aqueous solution of hydrochloric (muriatic) acid. Do not allow acid to remain on the surface for more than five minutes before rinsing with fresh water. Do not acid clean more than 4 square feet of surface, per workman, at one time.

c. Cosmetic Repair of Minor Defects: Repair or fill mortar joints and minor defects, including but not limited to spalls, in accordance with manufacturer's recommendations and prior to coating application.

d. Allowable Moisture Content: Latex coatings may be applied to damp surfaces, but not to surfaces with droplets of water. Do not apply epoxies to damp vertical surfaces as determined by ASTM D 4263 or horizontal surfaces that exceed 3 lbs of moisture per 1000 square feet in 24 hours as determined by ASTM F 1869. In all cases follow manufacturers recommendations. Allow surfaces to cure a minimum of 30 days before painting.

3.4.2 Gypsum Board

a. Surface Cleaning: Gypsum board shall be dry. Remove loose dirt and dust by brushing with a soft brush, rubbing with a dry cloth, or vacuum-cleaning prior to application of the first coat material. A damp cloth or sponge may be used if paint will be water-based.

b. Repair of Minor Defects: Prior to painting, repair joints, cracks, holes, surface irregularities, and other minor defects with patching plaster or spackling compound and sand smooth.

c. Allowable Moisture Content: Latex coatings may be applied to damp surfaces, but not surfaces with droplets of water. Do not apply epoxies to damp surfaces as determined by ASTM D 4263. New plaster to be coated shall have a maximum moisture content of 8 percent, when measured in accordance with ASTM D 4444, Method A, unless otherwise authorized. In addition to moisture content requirements, allow new plaster to age a minimum of 30 days before preparation for painting.

3.5 PREPARATION OF WOOD AND PLYWOOD SURFACES

3.5.1 New Plywood and Wood Surfaces, Except Floors:

a. Wood surfaces shall be cleaned of foreign matter.

Surface Cleaning: Surfaces shall be free from dust and other deleterious substances and in a condition approved by the Contracting Officer prior to receiving paint or other finish. Do not use water to clean uncoated wood.

b. Removal of Fungus and Mold: Wash existing coated surfaces with a solution composed of 3 ounces (2/3 cup) trisodium phosphate, 1 ounce (1/3 cup) household detergent, 1 quart 5 percent sodium

hypochlorite solution and 3 quarts of warm water. Rinse thoroughly with fresh water.

c. Moisture content of the wood shall not exceed 12 percent as measured by a moisture meter in accordance with ASTM D 4444, Method A, unless otherwise authorized.

d. Wood surfaces adjacent to surfaces to receive water-thinned paints shall be primed and/or touched up before applying water-thinned paints.

e. Cracks and Nailheads: Set and putty stop nailheads and putty cracks after the prime coat has dried.

f. Cosmetic Repair of Minor Defects:

(1) Knots and Resinous Wood : Prior to application of coating, cover knots and stains with two or more coats of 3-pound-cut shellac varnish, plasticized with 5 ounces of castor oil per gallon. Scrape away existing coatings from knotty areas, and sand before treating. Prime before applying any putty over shellacked area.

(2) Open Joints and Other Openings: Fill with whiting putty, linseed oil putty. Sand smooth after putty has dried.

(3) Checking: Where checking of the wood is present, sand the surface, wipe and apply a coat of pigmented orange shellac. Allow to dry before paint is applied.

3.5.2 Interior Wood Surfaces, Stain Finish

Interior wood surfaces to receive stain shall be sanded. Oak and other open-grain wood to receive stain shall be given a coat of wood filler not less than 8 hours before the application of stain; excess filler shall be removed and the surface sanded smooth.

3.6 APPLICATION

3.6.1 Coating Application

Painting practices shall comply with applicable federal, state and local laws enacted to insure compliance with Federal Clean Air Standards. Apply coating materials in accordance with SSPC PA 1. SSPC PA 1 methods are applicable to all substrates, except as modified herein.

At the time of application, paint shall show no signs of deterioration. Uniform suspension of pigments shall be maintained during application.

Unless otherwise specified or recommended by the paint manufacturer, paint may be applied by brush, roller, or spray. Rollers for applying paints and enamels shall be of a type designed for the coating to be applied and the surface to be coated.

Paints, except water-thinned types, shall be applied only to surfaces that are completely free of moisture as determined by sight or touch.

Thoroughly work coating materials into joints, crevices, and open spaces. Special attention shall be given to insure that all edges, corners, crevices, welds, and rivets receive a film thickness equal to that of

adjacent painted surfaces.

Each coat of paint shall be applied so dry film shall be of uniform thickness and free from runs, drops, ridges, waves, pinholes or other voids, laps, brush marks, and variations in color, texture, and finish. Hiding shall be complete.

Touch up damaged coatings before applying subsequent coats.Interior areas shall be broom clean and dust free before and during the application of coating material.

Apply paint to new fire extinguishing sprinkler systems including valves, piping, conduit, hangers, supports, miscellaneous metal work, and accessories. Shield sprinkler heads with protective coverings while painting is in progress. Remove sprinkler heads which have been painted and replace with new sprinkler heads. For piping in unfinished spaces, provide primed surfaces with one coat of red alkyd gloss enamel to a minimum dry film thickness of 1.0 mil. Unfinished spaces include attic spaces, spaces above suspended ceilings, crawl spaces, pipe chases, mechanical equipment room, and space where walls or ceiling are not painted or not constructed of a prefinished material. For piping in finished areas, provide prime surfaces with two coats of paint to match adjacent surfaces, except provide valves and operating accessories with one coat of red alkyd gloss enamel. Upon completion of painting, remove protective covering from sprinkler heads.

a. Drying Time: Allow time between coats, as recommended by the coating manufacturer, to permit thorough drying, but not to present topcoat adhesion problems. Provide each coat in specified condition to receive next coat.

b. Primers, and Intermediate Coats: Do not allow primers or intermediate coats to dry more than 30 days, or longer than recommended by manufacturer, before applying subsequent coats. Follow manufacturer's recommendations for surface preparation if primers or intermediate coats are allowed to dry longer than recommended by manufacturers of subsequent coatings. Each coat shall cover surface of preceding coat or surface completely, and there shall be a visually perceptible difference in shades of successive coats.

c. Finished Surfaces: Provide finished surfaces free from runs, drops, ridges, waves, laps, brush marks, and variations in colors.

d. Thermosetting Paints: Topcoats over thermosetting paints (epoxies and urethanes) should be applied within the overcoating window recommended by the manufacturer.

3.6.2 Mixing and Thinning of Paints

Reduce paints to proper consistency by adding fresh paint, except when thinning is mandatory to suit surface, temperature, weather conditions, application methods, or for the type of paint being used. Obtain written permission from the Contracting Officer to use thinners. The written permission shall include quantities and types of thinners to use.

When thinning is allowed, paints shall be thinned immediately prior to application with not more than 1 pint of suitable thinner per gallon. The use of thinner shall not relieve the Contractor from obtaining complete

hiding, full film thickness, or required gloss. Thinning shall not cause the paint to exceed limits on volatile organic compounds. Paints of different manufacturers shall not be mixed.

3.6.3 Coating Systems

a. Minimum Dry Film Thickness (DFT): Apply paints, primers, varnishes, enamels, undercoats, and other coatings to a minimum dry film thickness of 1.5 mil each coat unless specified otherwise in the Tables. Coating thickness where specified, refers to the minimum dry film thickness.

b. Coatings for Surfaces Not Specified Otherwise: Coat surfaces which have not been specified, the same as surfaces having similar conditions of exposure.

c. Existing Surfaces Damaged During Performance of the Work, Including New Patches In Existing Surfaces: Coat surfaces with the following:

(1) One coat of primer.

(2) One coat of undercoat or intermediate coat.

(3) One topcoat to match adjacent surfaces.

3.7 COATING SYSTEMS FOR METAL

Apply coatings of Tables in Division 5 for Exterior and Interior.

a. Apply specified ferrous metal primer on the same day that surface is cleaned, to surfaces that meet all specified surface preparation requirements at time of application.

b. Inaccessible Surfaces: Prior to erection, use one coat of specified primer on metal surfaces that will be inaccessible after erection.

c. Shop-primed Surfaces: Touch up exposed substrates and damaged coatings to protect from rusting prior to applying field primer.

d. Surface Previously Coated with Epoxy or Urethane: Apply MPI 101, 1.5 mils DFT immediately prior to application of epoxy or urethane coatings.

e. Pipes and Tubing: The semitransparent film applied to some pipes and tubing at the mill is not to be considered a shop coat, but shall be overcoated with the specified ferrous-metal primer prior to application of finish coats.

f. Exposed Nails, Screws, Fasteners, and Miscellaneous Ferrous Surfaces. On surfaces to be coated with water thinned coatings, spot prime exposed nails and other ferrous metal with latex primer MPI 107.

3.8 COATING SYSTEMS FOR CONCRETE AND CEMENTITIOUS SUBSTRATES

Apply coatings of Tables in Division 3, 4 and 9 for Exterior and Interior.

3.9 COATING SYSTEMS FOR WOOD AND PLYWOOD

a. Apply coatings of Tables in Division 6 for Exterior and Interior.

b. Prior to erection, apply two coats of specified primer to treat and prime wood and plywood surfaces which will be inaccessible after erection.

c. Apply stains in accordance with manufacturer's printed instructions.

3.10 PIPING IDENTIFICATION

Piping Identification, Including Surfaces In Concealed Spaces: Provide in accordance with MIL-STD-101. Place stenciling in clearly visible locations. On piping not covered by MIL-STD-101, stencil approved names or code letters, in letters a minimum of 1/2 inch high for piping and a minimum of 2 inches high elsewhere. Stencil arrow-shaped markings on piping to indicate direction of flow using black stencil paint.

3.11 INSPECTION AND ACCEPTANCE

In addition to meeting previously specified requirements, demonstrate mobility of moving components, including swinging and sliding doors, cabinets, and windows with operable sash, for inspection by the Contracting Officer. Perform this demonstration after appropriate curing and drying times of coatings have elapsed and prior to invoicing for final payment.

3.12 PAINT TABLES

All DFT's are minimum values.

3.12.1 EXTERIOR PAINT TABLES

DIVISION 5: EXTERIOR METAL, FERROUS AND NON-FERROUS PAINT TABLE

STEEL / FERROUS SURFACES

A. New Steel that has been hand or power tool cleaned to SSPC SP 2 or SSPC SP 3

1. Alkyd
   New; MPI EXT 5.1Q-G5 (Semigloss) Existing; MPI REX 5.1D-G5

Primer:	Intermediate:	Topcoat:
MPI 23	MPI 94	MPI 94

   System DFT: 5.25 mils

EXTERIOR GALVANIZED SURFACES

B. New Galvanized surfaces:

1. MPI EXT 5.3A-G5 (Semigloss)

Primer:	Intermediate:	Topcoat:
MPI 26	MPI 11	MPI 11

   System DFT: 4.5 mils

EXTERIOR SURFACES, OTHER METALS (NON-FERROUS)

C. Aluminum, aluminum alloy and other miscellaneous non-ferrous metal items not otherwise specified except hot metal surfaces, roof surfaces, and new

EXTERIOR SURFACES, OTHER METALS (NON-FERROUS)
prefinished equipment. Match surrounding finish:

1. MPI EXT 5.4F-G5 (Semigloss)
   Primer: Intermediate: Topcoat:
   MPI 95 MPI 94 MPI 94
   System DFT: 5 mils

D. Surfaces adjacent to painted surfaces; Mechanical, Electrical, and miscellaneous metal items not
otherwise specified except new prefinished
equipment. Match surrounding finish:

1. MPI EXT 5.1D-G5 (Semigloss)
   Primer: Intermediate: Topcoat:
   MPI 79 MPI 94 MPI 94
   System DFT: 5.25 mils

3.12.2 INTERIOR PAINT TABLES

DIVISION 3: INTERIOR CONCRETE PAINT TABLE

A. New Concrete, vertical surfaces, not specified otherwise:

1. New; MPI INT 3.1C-G5 (Semigloss) / Existing; MPI RIN 3.1J-G5 (Semigloss)
   Primer: Intermediate: Topcoat:
   MPI 50 MPI 141 MPI 141
   System DFT: 4 mils

B. Concrete ceilings, uncoated:

1. Latex Aggregate
   MPI INT 3.1N
   Primer: Intermediate: Topcoat:
   N/A N/A MPI 42
   System DFT: Per Manufacturer

   Texture - Fine. Surface preparation, number of
   coats, and primer in accordance with manufacturer's instructions.
   Topcoat: Coating to match adjacent surfaces.

C. New concrete
walls in filter building and pumphouse:

1. Epoxy
   New; MPI INT 3.1F / Existing; MPI RIN 3.1E
   Primer: Intermediate: Topcoat:
   MPI 77 MPI 77 MPI 77
   System DFT: 4 mils

   Note: Primer may be reduced for penetration per manufacturer's
   instructions.

DIVISION 4: INTERIOR CONCRETE MASONRY UNITS PAINT TABLE

A. New Concrete masonry:

DIVISION 4: INTERIOR CONCRETE MASONRY UNITS PAINT TABLE

1. MPI INT 4.2D-G5 (Semigloss)

Filler	Primer:	Intermediate:	Topcoat:
MPI 4	N/A	MPI 141	MPI 141

System DFT: 11 mils

Fill all holes in masonry surface

DIVISION 5: INTERIOR METAL, FERROUS AND NON-FERROUS PAINT TABLE

INTERIOR STEEL / FERROUS SURFACES

A. Metal, Mechanical, Electrical, Fire extinguishing sprinkler systems including valves, conduit, hangers, supports,Surfaces adjacent to painted surfaces (Match surrounding finish),and miscellaneous metal items not otherwise specified except new prefinished equipment:

1. MPI INT 5.1R-G5 (Semigloss)

Primer:	Intermediate:	Topcoat:
MPI 79	MPI 141	MPI 141

System DFT: 5 mils

B. Ferrous metal in concealed damp spaces or in exposed areas

1. Aluminum Paint
MPI INT 5.1M

Primer:	Intermediate:	Topcoat:
MPI 79	MPI 1	MPI 1

System DFT: 4.25 mils

C. Miscellaneous non-ferrous metal items not otherwise specified except new prefinished equipment. Match surrounding finish:

1.MPI INT 5.4F-G5 (Semigloss)

Primer:	Intermediate:	Topcoat:
MPI 95	MPI 141	MPI 141

System DFT: 5 mils

DIVISION 6: INTERIOR WOOD PAINT TABLE

A. New Wood and plywood not otherwise specified: panel boards

1. MPI INT 6.4S-G5 (Semigloss)

Primer:	Intermediate:	Topcoat:
MPI 39	MPI 141	MPI 141

System DFT: 4.5 mils

B. New Wood Doors; Finish or Stained:

1. Stained, oil-modified polyurethane
New; MPI INT 6.3E-G4

Stain:	Primer:	Intermediate:	Topcoat:

DIVISION 6: INTERIOR WOOD PAINT TABLE

MPI 90	MPI 57	MPI 57	MPI 57

System DFT: 4 mils

Note: Sand between all coats per manufacturers recommendations.

DIVISION 9: INTERIOR GYPSUM BOARD, TEXTURED SURFACES PAINT TABLE

A. New Wallboard not otherwise specified:

1. New; MPI INT 9.2A-G5 (Semigloss) / Existing; RIN 9.2A-G5 (Semigloss)

Primer:	Intermediate:	Topcoat:
MPI 50	MPI 54	MPI 54

System DFT: 4 mils

-- End of Section --

SECTION TABLE OF CONTENTS

DIVISION 09 - FINISHES

SECTION 09915

COLOR SCHEDULE

06/93

PART 1 GENERAL

1.1 GENERAL

PART 2 PRODUCTS

2.1 REFERENCE TO MANUFACTURER'S COLOR
2.2 COLOR SCHEDULE
2.2.1 Exterior Walls
2.2.2 Exterior Trim
2.2.3 Exterior Roof
2.2.4 Interior Floor Finishes
2.2.5 Interior Base Finishes
2.2.6 Interior Wall Finishes
2.2.7 Interior Ceiling Finishes
2.2.8 Interior Trim
2.2.9 Interior Window Treatment
2.2.10 Interior Miscellaneous

PART 3 EXECUTION (Not Applicable)

-- End of Section Table of Contents --

SECTION 09915

COLOR SCHEDULE
06/93

PART 1 GENERAL

Attachments: Porcelain Floor Tile Patterns

1.1 GENERAL

This section covers only the color of the exterior and interior materials and products that are exposed to view in the finished construction. The word "color" as used herein includes surface color and pattern. Requirements for quality and method of installation are covered in other appropriate sections of the specifications. Specific locations where the various materials are required are shown on the drawings. Items not designated for color in this section may be specified in other sections. When color is not designated for items, the Contractor shall propose a color for approval.

PART 2 PRODUCTS

2.1 REFERENCE TO MANUFACTURER'S COLOR

Where color is shown as being specific to one manufacturer, an equivalent color by another manufacturer may be submitted for approval. Manufacturers and materials specified are not intended to limit the selection of equal colors from other manufacturers.

2.2 COLOR SCHEDULE

The color schedule lists the colors, patterns and textures required for exterior and interior finishes, including both factory applied and field applied colors. **The following schedule applies to the POL Operations Bldg., Pumphouse, and Filter Bldg. unless indicated otherwise. The finishes of the Canopies shall match the existing Wing Tank Maintenance Facility.**

2.2.1 Exterior Walls

Exterior wall colors shall apply to exterior wall surfaces including recesses at entrances and projecting vestibules. Conduit shall be painted to closely match the adjacent surface color. Wall color shall be provided to match the colors listed below.

a. Mortar: Custom Match Corp., Color: C-126, PO Box 2855, W. Durham Station, Durham, NC 27705.

b. Split-Face Concrete Masonry Units (Integrally Colored): Adams Products, color A807W Tiger Yellow.

c. Double Half Concrete Masonry Units (Integrally Colored): Adams Products, color 417M Tiger Stripe.

e. Electrical Transformer: Sherwin Williams SW 2035 Chicory.

2.2.2 Exterior Trim

Exterior trim shall be provided to match the colors listed below.

a. Main Entry Doors and All Door Frames: Sherwin Williams SW 2035 Chicory. Secondary Doors: Sherwin Williams SW 2045 Boulevard Beige.

b. Windows (mullion, muntin, sash, trim, and sill): Medium Bronze.

c. Fascia and Gutter: Sherwin Williams SW 2035 Chicory

d. Downspouts: Sherwin Williams SW-2045 Boulevard Beige.

e. Wall Louvers: Match adjacent wall color.

f. Pumphouse Railing, Handrail and Ladder: Sherwin Williams SW-2045 Boulevard Beige.

g. Overhangs: Match Roof color.

h. Caulking and Sealants: Match adjacent surface.

2.2.3 Exterior Roof

Roof color shall apply to exterior roof surfaces including sheet metal flashings and copings, mechanical units, roof trim, pipes, conduits, electrical appurtenances, and similar items. Roof color shall be provided to match the colors listed below.

a. Metal: Lilly Industries, Inc., Formula #626D4184, T-Stratford Brown Satin Nubelar; Morton Industrial Coatings, Formula #836T62, Stratford Brown; Valspar Stratford Brown; or Drexel Metals Inc. Stratford Brown.

2.2.4 Interior Floor Finishes

Flooring materials shall be provided to match the colors listed below.

a. Carpet: Patcraft "Perception" 18443, Color 304 Awareness.

b. Vinyl Composition Tile: Mannington Inspirations 417 Cream Tones.

c. Porcelain Tile Pattern in Toilets/Locker Areas: Crossville Ceramics AV31 Cascade (PT-1) 12" 80% and AV35 Smoky (PT-2) 6" 20%, Pattern Idea #20
SEE ATTACHMENTS.

d. Porcelain Tile in Corridor 102: Crossville Ceramics AV35 Smoky 12" Pattern Idea #1 (tile installed at 90 degree angle)
SEE ATACHMENTS.

e. Porcelain Tile Grout: Hydroment Mobe Pearl S123/U209.

f. Sparkproof Flooring in Laboratory: Selby 011 Tan.

2.2.5 Interior Base Finishes

Base materials shall be provided to match the colors listed below.

a. Resilient Base and Edge Strips: Roppe P193 Black-Brown.

b. Sparkproof Flooring: Selby 011 Tan.

c. Porcelain Tile: Crossville Ceramics AV31 Cascade, 6".

d. Porcelain Tile Grout: Hydroment Mobe Pearl S123/U209.

2.2.6 Interior Wall Finishes

Interior wall color shall apply to the entire wall surface, including reveals, vertical furred spaces, grilles, diffusers, electrical and access panels, and piping and conduit adjacent to wall surfaces unless otherwise specified. Items not specified in other paragraphs shall be painted to match adjacent wall surface. Wall materials shall be provided to match the colors listed below.

a. Paint: Sherwin Williams SW1023 Ermine.

b. Vinyl Wall Covering in Ready Room 115 and Corridor 102 (VWC-1): Versa Wallcovering "Breccia" A45-517 Sasso distributed by National Wallcovering.

c. Vinyl Wall Covering below Chair Rail in 108 Conference Room (VWC-2): Versa "Osaka" A52-523 Sandalwood distributed by National Wallcovering.

d. Porcelain Tile:
Top Course: Crossville Ceramics AV35 Smoky, 6"
Remaining Courses: Crossville Ceramics AV31 Cascade, 6".

e. Porcelain Tile Grout: Hydroment Mobe Pearl S123/U209.

f. Ceramic Tile in Showers: American Olean, 25 Ice White.

g. Ceramic Tile Grout: White.

2.2.7 Interior Ceiling Finishes

Ceiling colors shall apply to ceiling surfaces including soffits, furred down areas, grilles, diffusers, registers, and access panels. Ceiling color shall also apply to joist, underside of roof deck, and conduit and piping where joists and deck are exposed and required to be painted. Ceiling materials shall be provided to match the colors listed below.

a. Acoustical Tile and Grid: Armstrong, Beveled Tegular Cirrus, White #538.

b. Paint: Sherwin Williams Pure White SW 100.

c. Structural Framing: Valspar Standard White.

d. Metal Deck: Sherwin Williams Pure White SW 100.

2.2.8 Interior Trim

Interior trim shall be provided to match the colors listed below.

a. Doors: Hollow Metal: Sherwin Williams SW2140 Sealskin.
Wood: Match Wilsonart Formica 7759 Select Cherry Stain.

b. Door Frames: Sherwin Williams SW2140 Sealskin.

c. Windows (mullion, muntin, sash, trim, and stool): Sherwin Williams SW2140 Sealskin.

d. Window Sills: Corian Sandstone (C).

e. Fire Extinguisher Cabinets: Match adjacent wall surface.

f. Handrail at Steps (Rm. 125): Sherwin Williams SW2140 Sealskin.

g. Wood Stain on Chair Rail, Bench in Toilet and other Wood Items: Match Wilsonart Formica 7759 Select Cherry Stain.

2.2.9 Interior Window Treatment

Window treatments shall be provided to match the colors listed below.

a. Horizontal Blinds **(in POL Ops Bldg. only)**: Hunter Douglas 795 Surf.

2.2.10 Interior Miscellaneous

Miscellaneous items shall be provided to match the colors listed below.

a. Toilet Partitions and Urinal Screen: Metpar Terra Cotta 680.

b. Plastic Laminate in **POL Ops Bldg.**:
Toilets - Countertop and Backsplash: (PL-1) Wilsonart 4761-60 Mystique Mount.
Front Panel: (PL-2) Wilsonart 4818-60 Copper EV.
Room 125 (FCC) - Countertop and Backsplash: (PL-3) Wilsonart 1787-60 Oxide.
Wood to match Formica 7759 Select Cherry Stain.
Room 118 (Break Area) - Countertops and Backsplash: (PL-4) Wilsonart 4738-60 Ochre Roletta.
Cabinetry Fronts: (PL-5) Wilsonart 4580-07 Mesa Gold (Premium).
Room 122 (Janitor) - Shelving: (PL-1) Wilsonart 4761-60 Mystique Mount.

Plastic Laminate in **Filter Bldg.**:
Toilets - Countertop, Backsplash and Cabinet Fronts: (PL-1) Wilsonart 4761-60 Mystique Mount.

c. Signage Message Color (excluding handicapped signage): Match Sherwin Williams SW1023 Ermine.

d. Signage Background Color (excluding handicapped signage): Match Sherwin Williams SW2140 Sealskin.

e. Lockers: Penco 073 Champagne.

f. Wall Switch Handles and Standard Receptacle Bodies: Black.

g. Electrical Device Cover Plates and Panels: Black.

h. Shower Curtain: Off-White.

PART 3 EXECUTION (Not Applicable)

-- End of Section --

PORCELAIN FLOOR TILE PATTERN

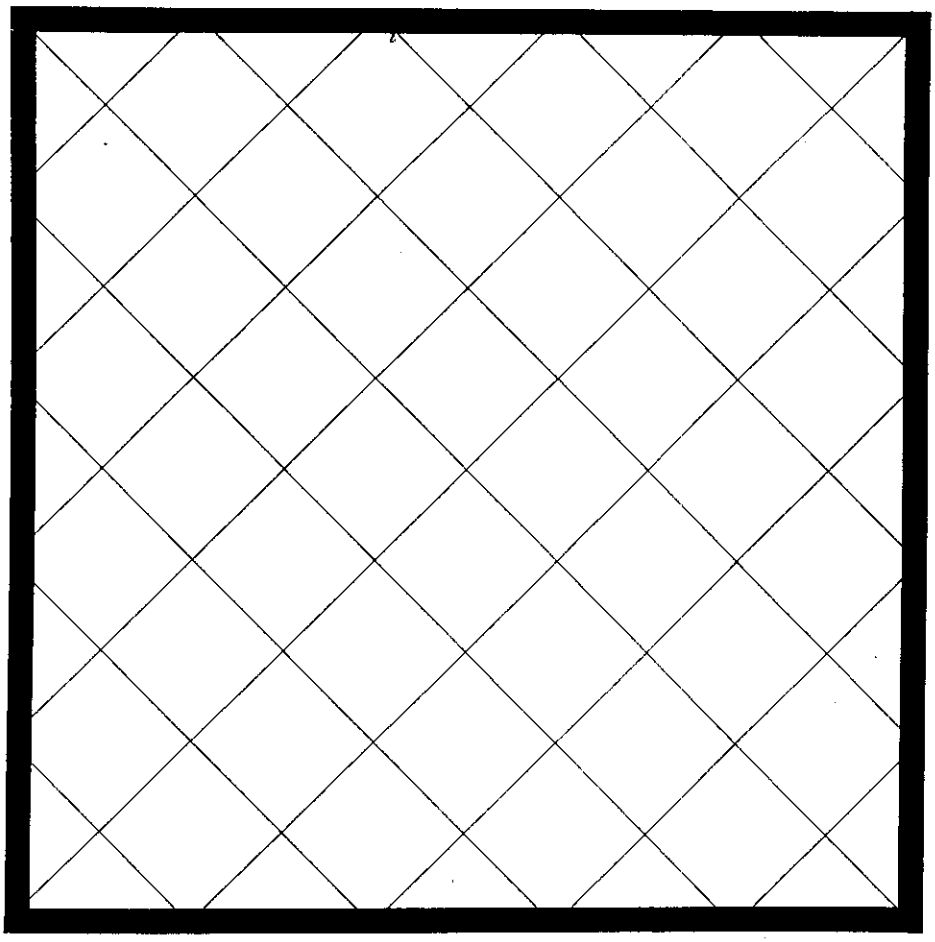

IDEA 1

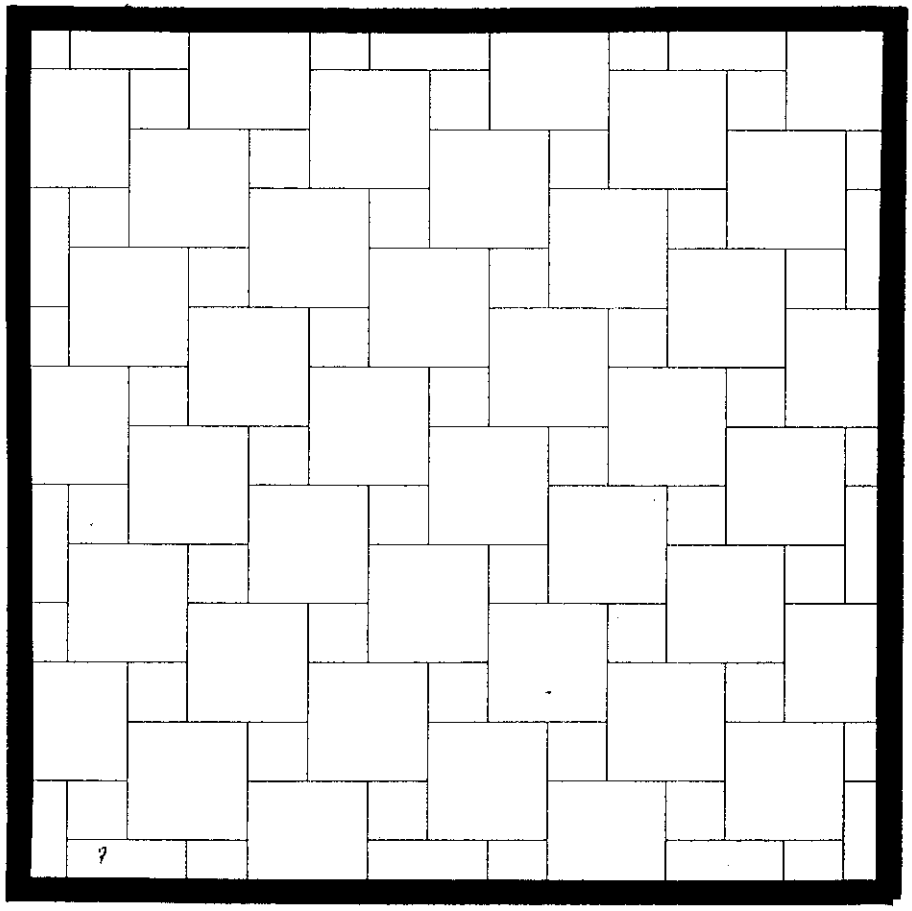

IDEA 20

SECTION TABLE OF CONTENTS

DIVISION 09 - FINISHES

SECTION 09965A

PAINTING: SECONDARY CONTAINMENT (CONCRETE SLAB)

04/01

PART 1 GENERAL

1.1 REFERENCES
1.2 LUMP SUM PRICE
1.2.1 Painting: Secondary Containment
1.2.1.1 Unit of Measure
1.3 SUBMITTALS
1.4 QUALIFICATIONS
1.4.1 Certified Professional
1.4.2 Certified Laboratory
1.4.3 Qualified Paint Applicator
1.4.3.1 Certification Test Procedure
1.4.3.2 Certification Criteria
1.4.4 Coating Thickness Gage Qualification
1.5 SAMPLING AND TESTING
1.6 SAFETY AND HEALTH PROVISIONS
1.6.1 Abrasive Blasting
1.6.1.1 Hoses And Nozzles
1.6.1.2 Workers Other Than Blasters
1.6.2 Cleaning with Compressed Air
1.6.3 Cleaning with Solvents
1.6.3.1 Ventilation
1.6.3.2 Personal Protective Equipment
1.6.4 Pretreatment of Metals and Concrete with Acids
1.6.4.1 Personal Protective Equipment
1.6.4.2 Emergency Equipment
1.6.5 Mixing Epoxy
1.6.5.1 Exhaust Ventilation
1.6.5.2 Personal Protective Equipment
1.6.5.3 Medical Precautions
1.6.5.4 Emergency Equipment
1.6.6 Paint Application
1.6.6.1 Ventilation
1.6.6.2 Explosion Proof Equipment
1.6.6.3 Further Precautions
1.6.6.4 Ignition Sources
1.6.7 Health Protection
1.6.7.1 Air Sampling
1.6.7.2 Respirators
1.6.7.3 Protective Clothing and Equipment
1.7 MEDICAL STATUS
1.8 CHANGE IN MEDICAL STATUS
1.9 ENVIRONMENTAL PROTECTION
1.9.1 Waste Classification, Handling, and Disposal
1.10 PAINT PACKAGING, DELIVERY, AND STORAGE

PART 2 PRODUCTS

2.1 SPECIAL PAINT FORMULAS
2.2 NOT USED
2.3 INGREDIENTS FOR SPECIAL PAINT FORMULAS
2.3.1 Thinners

2.3.1.1 Methanol
2.3.1.2 Methyl Ethyl Ketone
2.3.1.3 Methyl Isobutyl Ketone
2.3.1.4 Methyl Isoamyl Ketone
2.3.1.5 Toluene

PART 3 EXECUTION

3.1 CLEANING AND PREPARATION OF SURFACES TO BE PAINTED
3.1.1 General Requirements
3.1.2 Concrete Surfaces
3.2 PAINT APPLICATION
3.2.1 General
3.2.2 Mixing and Thinning
3.2.3 Atmospheric and Surface Conditions
3.2.4 Time Between Surface Preparation and Painting
3.2.5 Method of Paint Application
3.2.6 Coverage and Film Thickness
3.2.7 Progress of Painting Work
3.2.8 Drying Time Prior to Immersion
3.2.9 Protection of Painted Surfaces
3.3 PAINT SYSTEMS
3.3.1 Surface Preparation
3.3.2 System No. 21
3.3.3 Protection of Nonpainted Items and Cleanup
3.4 INSPECTION
3.5 PAINTING SCHEDULES

-- End of Section Table of Contents --

SECTION 09965A

PAINTING: SECONDARY CONTAINMENT (CONCRETE SLAB)
04/01

PART 1 GENERAL

Contractor shall coat secondary concrete containment.

1.1 REFERENCES

The publications listed below form a part of this specification to the extent referenced. The publications are referred to in the text by basic designation only.

AMERICAN NATIONAL STANDARDS INSTITUTE (ANSI)

ANSI Z87.1	(1989; Errata; Z87.1a) Occupational and Educational Eye and Face Protection
ANSI Z358.1	(1990) Emergency Eyewash and Shower Equipment

AMERICAN SOCIETY FOR TESTING AND MATERIALS (ASTM)

ASTM D 740	(1994; R 1997) Methyl Ethyl Ketone
ASTM D 841	(1997) Nitration Grade Toluene
ASTM D 1152	(1989; R 1997) Methanol (Methyl Alcohol)
ASTM D 1153	(1994; R 1997) Methyl Isobutyl Ketone
ASTM D 1400	(1994) Nondestructive Measurement of Dry Film Thickness of Nonconductive Coatings Applied to a Nonferrous Metal Base
ASTM D 2917	(1991; R 1998) Methyl Isoamyl Ketone

U.S. NATIONAL ARCHIVES AND RECORDS ADMINISTRATION (NARA)

29 CFR 1910	Occupational Safety and Health Standards
29 CFR 1910.20	Access to Employee Exposure and Medical Records
29 CFR 1910.94	Ventilation
29 CFR 1910.134	Respiratory Protection
29 CFR 1910.146	Permit Required Confined Spaces
29 CFR 1910, Subpart I	Personal Protective Equipment
29 CFR 1926	Safety and Health Regulations for Construction
29 CFR 1926.62	Lead
40 CFR 261, App II, Mtd 1311	Toxicity Characteristic Leaching Procedure (TCLP)
40 CFR 262.22	Number of Copies

40 CFR 263	Standards Applicable to Transporters of Hazardous Waste
49 CFR 171, Subchapter C	Hazardous Materials Regulations

U.S. ARMY CORPS OF ENGINEERS (USACE)

EM 385-1-1	(1996) U.S. Army Corps of Engineers Safety and Health Requirements Manual

U.S. DEPARTMENT OF DEFENSE (DOD)

MS MIL-DTL-24441	(Rev C, Supplement 1) Paint, Epoxy-Polyamide, General Specification for

NATIONAL FIRE PROTECTION ASSOCIATION (NFPA)

NFPA 70	(2002) National Electrical Code

THE SOCIETY FOR PROTECTIVE COATINGS (SSPC)

SSPC SP 1	(1982) Solvent Cleaning

1.2 LUMP SUM PRICE

1.2.1 Painting: Secondary Containment

1.2.1.1 Unit of Measure

Unit of measure: lump sum.

1.3 SUBMITTALS

Government approval is required for submittals with a "G" designation; submittals not having a "G" designation are for information only. When used, a designation following the "G" designation identifies the office that will review the submittal for the Government. The following shall be submitted in accordance with Section 01330 SUBMITTAL PROCEDURES:

SD-03 Product Data

Accident Prevention Plan; G-RE

The Contractor shall submit an Accident Prevention Plan in accordance with the requirements of Section 01 of EM 385-1-1. The plan shall include, but is not limited to, each of the topic areas listed in Appendix A therein and the requirements of paragraph SAFETY AND HEALTH PROVISIONS; each topic shall be developed in a concise manner to include management and operational aspects.

Respiratory Protection Program; G-RE

The Contractor shall submit a comprehensive written respiratory protection program in accordance with 29 CFR 1910.134, 29 CFR 1926.62, and Section 05.E of EM 385-1-1.

Ventilation Assessment; G-RE

The contractor shall submit a plan to provide ventilation assessment as required by paragraph PAINT APPLICATION, subparagraph VENTILATION.

Medical Surveillance Plan; G-RE

The Contractor shall submit a Medical Surveillance Plan as required in paragraph MEDICAL STATUS and provide a statement from the examining physician indicating the name of each employee evaluated and any limitations which will preclude the employee from performing the work required. The statement shall include the date of the medical evaluation, the physician's name, signature, and telephone number.

Worker Protection Plan; G-RE

The Contractor shall submit a Worker Protection Plan in accordance with the requirements of 29 CFR 1926.62. The plan shall address all necessary aspects of worker protection and shall include activities emitting lead, means to achieve compliance, alternative technologies considered, air monitoring program, implementation schedule, work practice program, administrative controls, multicontractor site arrangements, and jobsite inspections.

SD-04 Samples

Specification and Proprietary Paints; G-RE,

The Contractor shall submit samples of all special paint formula, Military, Master Painter Institute, Commercial Item Description, and SSPC paints. For products that are specified to be applied in accordance with the manufacturer's recommendations the Contractor shall submit the paint producers product data sheet or other written instructions for those products. When the required quantity of any type is 50 gallons or less, the Contractor shall submit in lieu of the liquid paint sample:

a. A certified test report showing the results of required tests made on the material and a statement that it meets all of the specification requirements.

b. A certified test report showing the results of required tests made on a previous batch of paint produced by the same firm using the same ingredients and formulation except for minor differences necessitated by a color change and a statement that the previous batch met all of the specification requirements. A report of tests on the proposed batch showing the following properties applicable to the material specifications shall be furnished: color, gloss, drying time, opacity, viscosity, weight per gallon (liter), and fineness of grind.

Thinners; G-RE,

Samples shall be submitted of the thinners which are those solvents used to reduce the viscosity of the paint.

Inspection and Operation Records; G-RE,

The Contractor shall submit records of inspections and operations performed in accordance with paragraph INSPECTION. Submittals shall be made on a daily basis.

SD-07 Certificates

Qualifications and Experience; G-RE

The Contractor shall submit certification pursuant to paragraph QUALIFICATIONS for all job sites. Submittal of the qualifications and

experience of any additional qualified and competent persons employed to provide on-site environmental, safety, and health shall also be provided. Acceptance of this submission must be obtained prior to the submission of other required environmental, safety, and health submittal items.

Qualified Coating Thickness Gages; G-RE

Documentation of manufacturer's certification shall be submitted for all coating thickness gages.

1.4 QUALIFICATIONS

Qualifications and experience shall comply with the following.

1.4.1 Certified Professional

The Contractor shall utilize a qualified and competent person as defined in Section 01 of EM 385-1-1 to develop the required safety and health submittal and to provide on-site safety and health services during the contract period. The person shall be a Certified Industrial Hygienist (CIH), an Industrial Hygienist (IH), or a Certified Safety Professional (CSP) with a minimum of 3 years of demonstrated experience in similar related work. The Contractor shall certify that the Certified Industrial Hygienist (CIH) holds current and valid certification from the American Board of Industrial Hygiene (ABIH), that the IH is considered board eligible by written confirmation from the ABIH, or that the CSP holds current and valid certification from the American Board of Certified Safety Professionals. The CIH, IH, or CSP may utilize other qualified and competent persons, as defined in EM 385-1-1, to conduct on-site safety and health activities as long as these persons have a minimum of 2 years of demonstrated experience in similar related work and are under the direct supervision of the CIH, IH, or CSP. For lead containing jobsites, the competent and qualified person shall have successfully completed an EPA or state accredited lead-based paint abatement Supervisor course specific to the work to be performed and shall possess current and valid state and/or local government certification, as required.

1.4.2 Certified Laboratory

The Contractor shall provide documentation which includes the name, address, and telephone number of the laboratories to be providing services. In addition, the documentation shall indicate that each laboratory is an EPA National Lead Laboratory Accreditation Program (NLLAP) accredited laboratory and that each is rated proficient in the NIOSH/EPA Environmental Lead Proficiency Analytical Testing Program (ELPAT)and will document the date of current accreditation. Certification shall include accreditation for heavy metal analysis, list of experience relevant to analysis of lead in air, and a Quality Assurance and Quality Control Program.

1.4.3 Qualified Paint Applicator

Documentation of certification shall be submitted for all paint applicators. Prior to the initiation of any work all paint applicators shall be tested and certified as meeting the requirements of the qualified paint applicator. Certification shall be administered by the government approved independent third party Test Agency. Applicators failing the certification test shall not be permitted to apply any paint on the project.

1.4.3.1 Certification Test Procedure

Certification testing of paint applicators shall be conducted at the job site in coordination with the Contracting Officer. The Contractor shall supply the fabricated test plates to be used for the tests and shall provide crane service,

rigging, and any other work necessary to provide accessibility for the certification testing and inspection. In preparation, the Contractor shall clean and prepare the test plates in accordance with the requirements of the contracted work. Abrasive blasting shall be performed with the blast media to be used in the contract. The paints to be applied shall be the Contractor supplied materials and shall be those previously tested and approved for use on the contract. Paints shall be applied as specified in the contract. The painter being tested shall mix and thin the paints to be used in the test and shall set up and adjust the application equipment for use. Each painter shall apply each of the types of paint comprising the specified system. The test plate shall be painted in a near vertical position.

1.4.3.2 Certification Criteria

The paint applicator shall be evaluated based on the conformance of the applied paint system to the requirements of the specifications. Deficiencies in the coatings, improper mixing or improper application methods are basis for failure. The Test Agency shall be the sole judge as to the acceptability of each paint applicators performance.

1.4.4 Coating Thickness Gage Qualification

Documentation of certification shall be submitted for all coating thickness gages. Magnetic flux thickness gages as described in ASTM D 1186 shall be used to make all coating thickness measurements on ferrous metal substrates. Eddy current thickness gages as described in ASTM D 1400 shall be used to measure coating thickness on all nonferrous metal substrates. Gages shall have an accuracy of +/- 3 percent or better. Gages to be used on the job shall be certified by the manufacturer as meeting these requirements.

1.5 SAMPLING AND TESTING

The Contractor shall allow at least 30 days for sampling and testing. Sampling may be at the jobsite or source of supply. The Contractor shall notify the Contracting Officer when the paint and thinner are available for sampling. Sampling of each batch shall be witnessed by the Contracting Officer unless otherwise specified or directed. A 1-quart sample of paint and thinner shall be submitted for each batch proposed for use. The sample shall be labeled to indicate formula or specification number and nomenclature, batch number, batch quantity, color, date made, and applicable project contract number. Testing will be performed by the Government. Costs for retesting rejected material will be deducted from payments to the Contractor at the rate of $500 dollars for each paint sample retested and $200 dollars for each thinner retested.

1.6 SAFETY AND HEALTH PROVISIONS

Work shall be performed in accordance with the requirements of 29 CFR 1910, 29 CFR 1926, EM 385-1-1, and other references as listed herein. Matters of interpretation of the standards shall be submitted to the Contracting Officer for resolution before starting work. Where the regulations conflict, the most stringent requirements shall apply. Paragraph SAFETY AND HEALTH PROVISIONS supplements the requirements of EM 385-1-1, paragraph (1). In any conflict between Section 01 of EM 385-1-1 and this paragraph, the provisions herein shall govern.

1.6.1 Abrasive Blasting

The Contractor shall comply with the requirements in Section 06.H of EM 385-1-1.

1.6.1.1 Hoses And Nozzles

In addition to the requirements in Section 20 of EM 385-1-1, hoses and hose connections of a type to prevent shock from static electricity shall be used.

Hose lengths shall be joined together by approved couplings of a material and type designed to prevent erosion and weakening of the couplings. The couplings and nozzle attachments shall fit on the outside of the hose and shall be designed to prevent accidental disengagement.

1.6.1.2 Workers Other Than Blasters

Workers other than blasting operators working in close proximity to abrasive blasting operations shall be protected by utilizing MSHA/NIOSH-approved half-face or full-face air purifying respirators equipped with high-efficiency particulate air (HEPA) filters, eye protection meeting or exceeding ANSI Z87.1 and hearing protectors (ear plugs and/or ear muffs) providing a noise reduction rating of at least 20 dBA or as needed to provide adequate protection.

1.6.2 Cleaning with Compressed Air

Cleaning with compressed air shall be in accordance with Section 20.B.5 of EM 385-1-1 and personnel shall be protected as specified in 29 CFR 1910.134.

1.6.3 Cleaning with Solvents

1.6.3.1 Ventilation

Ventilation shall be provided where required by 29 CFR 1910.146 or where the concentration of solvent vapors exceeds 10 percent of the Lower Explosive Limit (LEL). Ventilation shall be in accordance with 29 CFR 1910.94, paragraph (c)(5).

1.6.3.2 Personal Protective Equipment

Personal protective equipment shall be provided where required by 29 CFR 1910.146 and in accordance with 29 CFR 1910, Subpart I.

1.6.4 Pretreatment of Metals and Concrete with Acids

1.6.4.1 Personal Protective Equipment

Personnel shall be protected in accordance with 29 CFR 1910, Subpart I.

1.6.4.2 Emergency Equipment

In addition to the requirements of Section 05 of EM 385-1-1, the Contractor shall provide an eyewash in accordance with ANSI Z358.1, paragraph (6).

1.6.5 Mixing Epoxy

1.6.5.1 Exhaust Ventilation

Local exhaust ventilation shall be provided in the area where the curing agent and resin are mixed. This ventilation system shall be capable of providing at least 100 linear fpm of capture velocity measured at the point where the curing agent and resin contact during mixing.

1.6.5.2 Personal Protective Equipment

Exposure of skin and eyes to epoxy resin components shall be avoided by wearing appropriate chemically resistant gloves, apron, safety goggles, and face shields meeting or exceeding the requirements of ANSI Z87.1.

1.6.5.3 Medical Precautions

Individuals who have a history of sensitivity to epoxy or polyurethane resin systems shall be medically evaluated before any exposure can occur. Individuals who are medically evaluated as exhibiting a sensitivity to epoxy

resins shall not conduct work tasks or otherwise be exposed to such chemicals. Individuals who develop a sensitivity shall be immediately removed from further exposure and medically evaluated.

1.6.5.4 Emergency Equipment

A combination unit, comprised of an eyewash and deluge shower, within close proximity to the epoxy or polyurethane resin mixing operation shall be provided in accordance with ANSI Z358.1, paragraph (9).

1.6.6 Paint Application

1.6.6.1 Ventilation

When using solvent-based paint in confined spaces, ventilation shall be provided to exchange air in the space at a minimum rate of 5,000 cubic feet per minute per spray gun in operation. It may be necessary to install both a mechanical supply and exhaust ventilation system to effect adequate air changes within the confined space. All air-moving devices shall be located and affixed to an opening of the confined space in a manner that assures that the airflow is not restricted or short circuited and is supplied in the proper direction. Means of egress shall not be blocked. Ventilation shall be continued after completion of painting and through the drying phase of the operation. If the ventilation system fails or the concentration of volatiles exceeds 10 percent of the LEL (except in the zone immediately adjacent to the spray nozzle), painting shall be stopped and spaces evacuated until such time that adequate ventilation is provided. An audible alarm that signals system failure shall be an integral part of the ventilation system. The effectiveness of the ventilation shall be checked by using ventilation smoke tubes and making frequent oxygen and combustible gas readings during painting operations. Exhaust ducts shall discharge clear of the working areas and away from possible sources of ignition.

1.6.6.2 Explosion Proof Equipment

Electrical wiring, lights, and other equipment located in the paint spraying area shall be of the explosion proof type designed for operation in Class I, Division 1, Group D, hazardous locations as required by the NFPA 70. Electrical wiring, motors, and other equipment, outside of but within 20 feet of any spraying area, shall not spark and shall conform to the provisions for Class I, Division 2, Group D, hazardous locations. Electric motors used to drive exhaust fans shall not be placed inside spraying areas or ducts. Fan blades and portable air ducts shall be constructed of nonferrous materials. Motors and associated control equipment shall be properly maintained and grounded. The metallic parts of air-moving devices, spray guns, connecting tubing, and duct work shall be electrically bonded and the bonded assembly shall be grounded.

1.6.6.3 Further Precautions

a. Workers shall wear nonsparking safety shoes.

b. Solvent drums taken into the spraying area shall be placed on nonferrous surfaces and shall be grounded. Metallic bonding shall be maintained between containers and drums when materials are being transferred.

c. Insulation on all power and lighting cables shall be inspected to ensure that the insulation is in excellent working condition and is free of all cracks and worn spots. Cables shall be further inspected to ensure that no connections are within 50 feet of the operation, that lines are not overloaded, and that they are suspended with sufficient slack to prevent undue stress or chafing.

1.6.6.4 Ignition Sources

Ignition sources, to include lighted cigarettes, cigars, pipes, matches, or cigarette lighters shall be prohibited in area of solvent cleaning, paint storage, paint mixing, or paint application.

1.6.7 Health Protection

1.6.7.1 Air Sampling

The Contractor shall perform air sampling and testing as needed to assure that workers are not exposed to contaminants above the permissible exposure limit. In addition, the Contractor shall provide the Contracting Officer with a copy of the test results from the laboratory within five working days of the sampling date and shall provide results from direct-reading instrumentation on the same day the samples are collected.

1.6.7.2 Respirators

During all spray painting operations, spray painters shall use approved SCBA or SAR (air line) respirators, unless valid air sampling has demonstrated contaminant levels to be consistently within concentrations that are compatible with air-purifying respirator Assigned Protection Factor (APF). Persons with facial hair that interferes with the sealing surface of the facepiece to faceseal or interferes with respirator valve function shall not be allowed to perform work requiring respiratory protection. Air-purifying chemical cartridge/canister half- or full-facepiece respirators that have a particulate prefilter and are suitable for the specific type(s) of gas/vapor and particulate contaminant(s) may be used for nonconfined space painting, mixing, and cleaning (using solvents). These respirators may be used provided the measured or anticipated concentration of the contaminant(s) in the breathing zone of the exposed worker does not exceed the APF for the respirator and the gas/vapor has good warning properties or the respirator assembly is equipped with a NIOSH-approved end of service life indicator for the gas(es)/vapor anticipated or encountered. Where paint contains toxic elements such as lead, cadmium, chromium, or other toxic particulates that may become airborne during painting in nonconfined spaces, air-purifying half- and full-facepiece respirators or powered air-purifying respirators equipped with appropriate gas vapor cartridges, in combination with a high-efficiency filter, or an appropriate canister incorporating a high-efficiency filter, shall be used.

1.6.7.3 Protective Clothing and Equipment

All workers shall wear safety shoes or boots, appropriate gloves to protect against the chemical to be encountered, and breathable, protective, full-body covering during spray-painting applications. Where necessary for emergencies, protective equipment such as life lines, body harnesses, or other means of personnel removal shall be used during confined-space work.

1.7 MEDICAL STATUS

Prior to the start of work and annually thereafter, all Contractor employees working with or around paint systems, thinners, blast media, those required to wear respiratory protective equipment, and those who will be exposed to high noise levels shall be medically evaluated for the particular type of exposure they may encounter. Medical records shall be maintained as required by 29 CFR 1910.20. The evaluation shall include:

a. Audiometric testing and evaluation of employees who will work in a noise environment with a time weighted average greater than or equal to 90 dBA.

b. Vision screening (employees who use full-facepiece respirators shall

not wear contact lenses).

c. Medical evaluation shall include, but shall not be limited to, the following:

(1) Medical history including, but not limited to, alcohol use, with emphasis on liver, kidney, and pulmonary systems, and sensitivity to chemicals to be used on the job.

(2) General physical examination with emphasis on liver, kidney, and pulmonary system.

(3) Determination of the employee's physical and psychological ability to wear respiratory protective equipment and to perform job-related tasks.

(4) Determination of baseline values of biological indices for later comparison to changes associated with exposure to paint systems and thinners or blast media, which include: liver function tests to include SGOT, SGPT, GGPT, alkaline phosphates, bilirubin, complete urinalysis, EKG (employees over age 40), blood urea nitrogen (bun), serum creatinine, pulmonary function test, FVC, and FEV, chest x-ray (if medically indicated), blood lead and ZPP (for individuals where it is known there will be an exposure to materials containing lead), other criteria that may be deemed necessary by the Contractor's physician, and Physician's statements for individual employees that medical status would permit specific task performance.

(5) For lead-based paint removal, the medical requirements of 29 CFR 1926.62 shall also be included.

1.8 CHANGE IN MEDICAL STATUS

Any employee whose medical status has changed negatively due to work related chemical and/or physical agent exposure while working with or around paint systems and thinners, blast media, or other chemicals shall be evaluated by a physician, and the Contractor shall obtain a physicians statement as described in paragraph MEDICAL STATUS prior to allowing the employee to return to those work tasks. The Contractor shall notify the Contracting Officer in writing of any negative changes in employee medical status and the results of the physicians reevaluation statement.

1.9 ENVIRONMENTAL PROTECTION

In addition to the requirements of section 01354 the Contractor shall comply with the following environmental protection criteria.

1.9.1 Waste Classification, Handling, and Disposal

The Contractor shall be responsible for assuring the proper disposal of all hazardous and nonhazardous waste generated during the project. Waste generated from abrasive blasting lead-containing paints with recyclable steel or iron abrasives shall be disposed of as a hazardous waste or shall be stabilized with proprietary pre-blast additives regardless of the results of 40 CFR 261, App II, Mtd 1311. Where stabilization is preferred, the contractor shall employ a proprietary blast additive, that has been blended with the blast media prior to use. Hazardous waste shall be placed in properly labeled closed containers and shall be shielded adequately to prevent dispersion of the waste by wind or water. Any evidence of improper storage shall be cause for immediate shutdown of the project until corrective action is taken. Nonhazardous waste shall be stored in closed containers separate from hazardous waste storage areas. All hazardous waste shall be transported by a licensed transporter in accordance with 40 CFR 263 and 49 CFR 171, Subchapter C. All nonhazardous waste shall be

transported in accordance with local regulations regarding waste transportation. In addition to the number of manifest copies required by 40 CFR 262.22, one copy of each manifest will be supplied to the Contracting Officer prior to transportation.

1.10 PAINT PACKAGING, DELIVERY, AND STORAGE

Paints shall be processed and packaged to ensure that within a period of one year from date of manufacture, they will not gel, liver, or thicken deleteriously, or form gas in the closed container. Paints, unless otherwise specified or permitted, shall be packaged in standard containers not larger than 5 gallons, with removable friction or lug-type covers. Each container of paint or separately packaged component thereof shall be labeled to indicate the purchaser's order number, date of manufacture, manufacturer's batch number, quantity, color, component identification and designated name, and formula or specification number of the paint together with special labeling instructions, when specified. Paint shall be delivered to the job in unbroken containers. Paints that can be harmed by exposure to cold weather shall be stored in ventilated, heated shelters. All paints shall be stored under cover from the elements and in locations free from sparks and flames.

PART 2 PRODUCTS

2.1 SPECIAL PAINT FORMULAS

Special paints shall have the composition as indicated in the formulas listed herein. Where so specified, certain components of a paint formulation shall be packaged in separate containers for mixing on the job. If not specified or otherwise prescribed, the color shall be that naturally obtained from the required pigmentation.

2.2 NOT USED

2.3 INGREDIENTS FOR SPECIAL PAINT FORMULAS

The following ingredient materials and thinners apply only to those special paints whose formulas are shown above in detail.

2.3.1 Thinners

2.3.1.1 Methanol

Methanol (methyl alcohol) shall conform to ASTM D 1152.

2.3.1.2 Methyl Ethyl Ketone

Methyl ethyl ketone (MEK) shall conform to ASTM D 740.

2.3.1.3 Methyl Isobutyl Ketone

Methyl isobutyl ketone (MIBK) shall conform to ASTM D 1153.

2.3.1.4 Methyl Isoamyl Ketone

Methyl isoamyl ketone (MIAK) shall conform to ASTM D 2917.

2.3.1.5 Toluene

Toluene shall conform to ASTM D 841.

PART 3 EXECUTION

3.1 CLEANING AND PREPARATION OF SURFACES TO BE PAINTED

3.1.1 General Requirements

Surfaces to be painted shall be cleaned before applying paint or surface treatments. Deposits of grease or oil shall be removed in accordance with SSPC SP 1, prior to mechanical cleaning. Solvent cleaning shall be accomplished with mineral spirits or other low toxicity solvents having a flash point above 100 degrees F. Clean cloths and clean fluids shall be used to avoid leaving a thin film of greasy residue on the surfaces being cleaned. Items not to be prepared or coated shall be protected from damage by the surface preparation methods. Machinery shall be protected against entry of blast abrasive and dust into working parts. Cleaning and painting shall be so programmed that dust or other contaminants from the cleaning process do not fall on wet, newly painted surfaces, and surfaces not intended to be painted shall be suitably protected from the effects of cleaning and painting operations. Welding of, or in the vicinity of, previously painted surfaces shall be conducted in a manner to prevent weld spatter from striking the paint and to otherwise reduce coating damage to a minimum; paint damaged by welding operations shall be restored to original condition. Surfaces to be painted that will be inaccessible after construction, erection, or installation operations are completed shall be painted before they become inaccessible.

3.1.2 Concrete Surfaces

New concrete surfaces, including concrete floors, shall be permitted to age for a minimum of 30 days prior to painting. Grease and oil removal shall be accomplished by solvent cleaning and/or detergent washing followed by rinsing. Loosely adherent materials such as dirt, dust, laitance, efflorescence, bleed water residues, or other foreign substances shall be removed by wire or fiber brushing, scrapers, light sandblasting or brushoff blasting, or other approved means. For interior walls and floors, sandblasting, unless otherwise specifically authorized, shall be restricted to the wet or vacuum type. Surface glaze, if present, shall be removed by light blasting or by scrubbing with a 5-percent solution of phosphoric acid. The texture of the surface after etching shall be roughly equivalent to the texture of an 80-120 grit sandpaper. If acid etching is used, the surface shall be thoroughly rinsed with clean water to remove all traces of the acid. Prior to painting, the concrete shall be dry. Adequate dryness shall be determined visually at the time of application by performing the following test. Tape 2-foot by 2-foot squares of polyethylene to the surface at random locations. The test patches shall remain in place overnight. Coatings shall only be applied if there are no traces of moisture and surfaces are dry beneath the polyethylene the following day.

3.2 PAINT APPLICATION

3.2.1 General

The finished coating shall be free from holidays, pinholes, bubbles, runs, drops, ridges, waves, laps, excessive or unsightly brush marks, and variations in color, texture, and gloss. Application of initial or subsequent coatings shall not commence until the Contracting Officer has verified that atmospheric conditions and the surfaces to be coated are satisfactory. Each paint coat shall be applied in a manner that will produce an even, continuous film of uniform thickness. Edges, corners, crevices, seams, joints, welds, rivets, corrosion pits, and other surface irregularities shall receive special attention to ensure that they receive an adequate thickness of paint. Spray equipment shall be equipped with traps and separators and where appropriate, mechanical agitators, pressure gauges, pressure regulators, and screens or filters. Air caps, nozzles, and needles shall be as recommended by the spray equipment manufacturer for the material being applied. Airless-type spray equipment may be used only on broad, flat, or otherwise simply configured surfaces, except that it may be employed for general painting if the spray gun is equipped with dual or adjustable tips of proper types and orifice sizes.

3.2.2 Mixing and Thinning

Paints shall be thoroughly mixed, strained where necessary, and kept at a uniform composition and consistency during application. Paste or dry-powder pigments specified to be added at the time of use shall, with the aid of powered stirrers, be incorporated into the vehicle or base paint in a manner that will produce a smooth, homogeneous mixture free of lumps and dry particles. Where necessary to suit conditions of the surface temperature, weather, and method of application, the paint may be thinned immediately prior to use. Thinning shall generally be limited to the addition of not more than 1 pint per gallon of the proper thinner; this general limitation shall not apply when more specific thinning instructions are provided. Paint that has been stored at low temperature, shall be brought up to at least 70 degrees F before being mixed and thinned, and its temperature in the spray tank or other working container shall not fall below 60 degrees F during the application. Paint that has deteriorated in any manner to a degree that it cannot be restored to essentially its original condition by customary field-mixing methods shall not be used and shall be removed from the project site. Paint and thinner that is more than 1 year old shall be resampled and resubmitted for testing to determine its suitability for application.

3.2.3 Atmospheric and Surface Conditions

Paint shall be applied only to surfaces that are above the dew point temperature and that are completely free of moisture as determined by sight and touch. Paint shall not be applied to surfaces upon which there is detectable frost or ice. Except as otherwise specified, the temperature of the surfaces to be painted and of air in contact therewith shall be not less than 45 degrees F during paint application nor shall paint be applied if the surfaces can be expected to drop to 32 degrees F or lower before the film has dried to a reasonably firm condition. During periods of inclement weather, painting may be continued by enclosing the surfaces and applying artificial heat, provided the minimum temperatures and surface dryness requirements prescribed previously are maintained. Paint shall not be applied to surfaces heated by direct sunlight or other sources to temperatures that will cause detrimental blistering, pinholing, or porosity of the film.

3.2.4 Time Between Surface Preparation and Painting

Surfaces that have been cleaned and/or otherwise prepared for painting shall be primed as soon as practicable after such preparation has been completed but, in any event, prior to any deterioration of the prepared surface.

3.2.5 Method of Paint Application

Unless otherwise specified, paint shall be applied by brush or spray to ferrous and nonferrous metal surfaces. Special attention shall be directed toward ensuring adequate coverage of edges, corners, crevices, pits, rivets, bolts, welds, and similar surface irregularities. Other methods of application to metal surfaces shall be subject to the specific approval of the Contracting Officer. Paint on plaster, concrete, or other nonmetallic surfaces shall be applied by brush, roller, and/or spray.

3.2.6 Coverage and Film Thickness

Film thickness or spreading rates shall be as specified hereinafter. Where no spreading rate is specified, the paint shall be applied at a rate normal for the type of material being used. In any event, the combined coats of a specified paint system shall completely hide base surface and the finish coats shall completely hide undercoats of dissimilar color.

3.2.7 Progress of Painting Work

Where field painting on any type of surface has commenced, the complete painting operation, including priming and finishing coats, on that portion of the work shall be completed as soon as practicable, without prolonged delays. Sufficient time shall elapse between successive coats to permit them to dry properly for recoating, and this period shall be modified as necessary to suit adverse weather conditions. Paint shall be considered dry for recoating when it feels firm, does not deform or feel sticky under moderate pressure of the finger, and the application of another coat of paint does not cause film irregularities such as lifting or loss of adhesion of the undercoat. All coats of all painted surfaces shall be unscarred and completely integral at the time of application of succeeding coats. At the time of application of each successive coat, undercoats shall be cleaned of dust, grease, overspray, or foreign matter by means of airblast, solvent cleaning, or other suitable means. Cement and mortar deposits on painted steel surfaces, not satisfactorily removed by ordinary cleaning methods, shall be brush-off blast cleaned and completely repainted as required. Undercoats of high gloss shall, if necessary for establishment of good adhesion, be scuff sanded, solvent wiped, or otherwise treated prior to application of a succeeding coat. Field coats on metal shall be applied after erection except as otherwise specified and except for surfaces to be painted that will become inaccessible after erection.

3.2.8 Drying Time Prior to Immersion

Minimum drying periods after final coat prior to immersion shall be: epoxy systems at least 5 days. Minimum drying periods shall be increased twofold if the drying temperature is below 65 degrees F and/or if the immersion exposure involves considerable abrasion.

3.2.9 Protection of Painted Surfaces

Where shelter and/or heat are provided for painted surfaces during inclement weather, such protective measures shall be maintained until the paint film has dried and discontinuance of the measures is authorized. Items that have been painted shall not be handled, worked on, or otherwise disturbed until the paint coat is fully dry and hard. All metalwork coated in the shop or field prior to final erection shall be stored out of contact with the ground in a manner and location that will minimize the formation of water-holding pockets; soiling, contamination, and deterioration of the paint film, and damaged areas of paint on such metalwork shall be cleaned and touched up without delay. The first field coat of paint shall be applied within a reasonable period of time after the shop coat and in any event before weathering of the shop coat becomes extensive.

3.3 PAINT SYSTEMS

3.3.1 Surface Preparation

The method of surface preparation and pretreatment shown in the tabulation of paint systems is for identification purposes only. Cleaning and pretreatment of surfaces prior to painting shall be accomplished in accordance with detailed requirements previously described.

3.3.2 System No. 21

Paint shall be applied with a minimum of three single coats to produce an average dry film thickness totaling 9.0 mils. When applying MS MIL-DTL-24441, the type of thinner, amount of thinning, and required induction time shall be as recommended by the manufacturer. The drying time between coats shall not be less than 8 hours nor more than 96 hours.

3.3.3 Protection of Nonpainted Items and Cleanup

Walls, equipment, fixtures and all other items in the vicinity of the surfaces being painted shall be maintained free from damage by paint or painting activities. Paint spillage and painting activity damage shall be promptly repaired.

3.4 INSPECTION

The Contractor shall inspect, document, and report all work phases and operations on a daily basis. As a minimum the daily report shall contain the following:

a. Inspections performed, including the area of the structure involved and the results of the inspection.

b. Surface preparation operations performed, including the area of the structure involved, the mode of preparation, the kinds of solvent, abrasive, or power tools employed, and whether contract requirements were met.

c. Thinning operations performed, including thinners used, batch numbers, and thinner/paint volume ratios.

d. Application operations performed, including the area of the structure involved, mode of application employed, ambient temperature, substrate temperature, dew point, relative humidity, type of paint with batch numbers, elapsed time between surface preparation and application, elapsed time for recoat, condition of underlying coat, number of coats applied, and if specified, measured dry film thickness or spreading rate of each new coating.

3.5 PAINTING SCHEDULES

SYSTEM NO. 21 Modified

Items or surfaces to be coated: Concrete Secondary Alignment

SURFACE PREPARATION	1st COAT	2nd COAT	3rd COAT
Clean of all debris, dirt Brushoff-Blast Clean	MS MIL-DTL-24441, Formula 152, Type III White	MS MIL-DTL-24441, Formula 150 Type III Green	MS MIL-DTL-24441, Formula 152, Type III White

Note: Color/Formula is for quality assurance to assure complete coverage of each coat. The 3rd coat is specified white so sediment and debris is easly visibile.

-- End of Section --

SECTION TABLE OF CONTENTS

DIVISION 09 - FINISHES

SECTION 09971

EXTERIOR COATING OF STEEL STRUCTURES

09/01

PART 1 GENERAL

1.1 REFERENCES
1.2 DEFINITIONS
1.3 SUBMITTALS
1.4 QUALITY ASSURANCE
1.4.1 Design Data
1.4.1.1 Containment System
1.4.2 Test Reports
1.4.2.1 Coatings Qualification Test Reports
1.4.2.2 Recycled Metallic Abrasive Field Test Reports (Daily and Weekly)
1.4.3 Certificates
1.4.3.1 Work Plan
1.4.3.2 Qualifications of Certified Industrial Hygienist (CIH)
1.4.3.3 Qualifications of Testing Laboratory for Coatings
1.4.3.4 Qualifications of Testing Laboratory for Abrasive
1.4.3.5 Qualifications of Coating Contractors
1.4.3.6 Qualifications of Coating Manufacturer's Representative
1.4.3.7 Coating Materials
1.4.3.8 Coating System Component Compatibility
1.4.3.9 Non-metallic Abrasive
1.4.3.10 Metallic Abrasive
1.4.4 Product Data
1.4.4.1 Coating System Instructions
1.5 DELIVERY AND STORAGE
1.6 COATING HAZARDS
1.7 JOB SITE REFERENCES
1.8 PRE-APPLICATION MEETING

PART 2 PRODUCTS

2.1 COATING SYSTEM
2.1.1 Zinc-Rich Epoxy Primer Coat
2.1.2 Epoxy Intermediate Coat
2.2 COATING SAMPLE COLLECTION AND SHIPPING KIT
2.3 ABRASIVE SAMPLE COLLECTION AND SHIPPING KIT
2.4 SOLUBLE SALTS TEST KITS
2.4.1 Test Kit for Measuring Chlorides on Steel Surfaces
2.5 ABRASIVE
2.5.1 Non-metallic Abrasive
2.5.2 Metallic Abrasive
2.5.2.1 New and Remanufactured Steel Grit
2.5.2.2 Recycled Steel Grit

PART 3 EXECUTION

3.1 COATING AND ABRASIVE SAMPLE COLLECTION AND TESTING
3.1.1 Coating Sample Collection
3.1.2 Abrasive Sample Collection
3.1.3 Coating Sample Test Reports
3.1.4 Abrasive Sample Test Reports
3.2 SURFACES TO BE COATED

3.3 LIGHTING
3.4 Containment
3.5 SURFACE PREPARATION
3.5.1 Abrasive Blasting Equipment
3.5.2 Surface Standard
3.5.3 Pre-Preparation Testing for Surface Contamination
3.5.3.1 Pre-Preparation Testing for Oil and Grease Contamination
3.5.3.2 Pre-Preparation Testing for Soluble Salts Contamination
3.5.4 Abrasive Blasting
3.5.5 Disposal of Used Abrasive
3.5.6 Pre-Application Testing For Surface Contamination
3.5.6.1 Pre-Application Testing for Oil and Grease Contamination
3.5.6.2 Pre-Application Testing for Soluble Salts Contamination
3.5.6.3 Pre-Application Testing for Surface Cleanliness
3.6 MIXING AND APPLICATION OF COATING SYSTEM
3.6.1 Preparation of Coating Materials for Application
3.6.1.1 Mixing Primer and Intermediate Coat Materials
3.6.1.2 Pot Life
3.6.1.3 Application Conditions and Recoat Windows
3.6.2 Application of Coating System
3.6.2.1 Application of Primer
3.6.2.2 Application of Stripe Coat
3.6.2.3 Application of Intermediate Coat
3.6.2.4 Application of Topcoat
3.6.2.5 Procedure for Holiday and Spot Repairs of Newly Applied Coating
3.6.2.6 Structure Occupancy After Coating Application
3.7 FIELD TESTS AND INSPECTION
3.7.1 Coating Inspector
3.7.2 Field Inspection
3.7.2.1 Inspection Requirements
3.7.2.2 Daily Inspection Reports
3.7.2.3 Inspection Logbook
3.7.2.4 Inspection Equipment
3.7.3 Hold Points for Quality Control Inspections
3.8 FINAL CLEANUP

-- End of Section Table of Contents --

SECTION 09971

EXTERIOR COATING OF STEEL STRUCTURES
09/01

PART 1 GENERAL

Contractor shall coat the exterior top and sides of the following tanks and subitems:

two (2) each 10,000 BBL fuel tanks
Tanks diameter is 55'-6" and height is 24'-1"
three (3) each 36 inch roof manholes
three (3) each 32 inch roof nozzles
48 inch nozzle
12 inch nozzle.

Note: The contractor shall not coat tanks until after the fill test. Contractor shall coat the exterior of the tank after the tanks are filled for the leakage test but before the geosynthetic drainage layer is installed and the concrete is placed.

1.1 REFERENCES

The following publications of the issues listed below, but referred to thereafter by basic designation only, form a part of this specification to the extent indicated by the references thereto:

AMERICAN SOCIETY FOR TESTING AND MATERIALS (ASTM)

ASTM D3276	(1996) Standard Guide for Painting Inspectors (Metal Substrates)
ASTM D3925	(1991) Sampling Liquid Paints and Related Pigmented Coatings
ASTM D4285	(1999) Indicating Oil or Water in Compressed Air
ASTM D4417	(1993) Field Measurement of Surface Profile of Blast Cleaned Steel

U.S. NATIONAL ARCHIVES AND RECORDS ADMINISTRATION (NARA)

29 CFR 1910.134	Respiratory Protection
29 CFR 1910.1000	Air Contaminants
29 CFR 1910-SUBPART Z	Toxic and Hazardous Substances
29 CFR 1926.59	Hazard Communication

U.S. GENERAL SERVICES ADMINISTRATION (GSA)

FED-STD-595	(Rev. B) Colors Used in Government Procurement

U.S. DEPARTMENT OF DEFENSE (DOD)

MIL-A-22262	(Rev. B) Abrasive Blasting Media Ship Hull Blast

	Cleaning
MIL-DTL-24441	(Rev. C; Supp. 1) Paint, Epoxy-Polyamide
MIL-DTL-24441/19	(Rev. B) Paint, Epoxy-Polyamide, Zinc Primer, Formula 159, Type III
MIL-DTL-24441/31	(Rev. A) Paint, Epoxy-Polyamide, White, Formula 152, Type IV

THE SOCIETY FOR PROTECTIVE COATINGS (SSPC)

SSPC AB 2	(1999) Cleanliness of Recycled Ferrous Metallic Abrasives
SSPC AB 3	(1997) Newly Manufactured or Re-Manufactured Steel Abrasives
SSPC Guide to VIS 1	(1989) Guide to Visual Standard for Abrasive Blast Cleaned Steel
SSPC VIS 1	(1989) Visual Standard for Abrasive Blast Cleaned Steel (Standard Reference Photographs)
SSPC SP COM	(2000) Surface Preparation Commentary
SSPC SP 1	(1982) Solvent Cleaning
SSPC SP 7	(1994) Brush-Off Blast Cleaning
SSPC SP 10	(1994) Near-White Blast Cleaning
SSPC PA 1	(2000) Shop, Field, and Maintenance Painting
SSPC PA 2	(1997) Measurement of Dry Paint Thickness with Magnetic Gages
SSPC Guide 6	(1995) Guide for Containing Debris Generated During Paint Removal Operations
SSPC Guide 12	(1998) Guide for Illumination of Industrial Painting Projects

1.2 DEFINITIONS

Definitions are provided throughout this Section, generally in the Article where used, and denoted by capital letters.

1.3 SUBMITTALS

Submit the following in accordance with Section 01330, "Submittal Procedures."

SD-05 Design Data

Containment System

SD-06 Test Reports

Coatings Qualification Test Reports; G-RE

Coating Sample Test Reports; G-RE

Abrasive Sample Test Reports; G-RE

Daily Inspection Reports; G-RE

Recycled Metallic Abrasive Field Test Reports (Daily and Weekly); G-RE

SD-07 Certificates

Work Plan; G-RE

Qualifications of Certified Industrial Hygienist (CIH); G-RE

Qualifications of Testing Laboratory for Coatings; G-RE

Qualifications of Testing Laboratory for Abrasive; G-RE

Qualifications of Coating Contractors; G-RE

Qualifications of Coating Manufacturer's Representative; G-RE

Coating Materials; G-RE

Coating System Component Compatibility; G-RE

Non-metallic Abrasive; G-RE

Metallic Abrasive; G-RE

SD-08 Manufacturer's Instructions

Coating System Instructions; G-RE

SD-11 Closeout Submittals

Disposal of Used Abrasive; G-RE

Inspection Logbook; G-RE

1.4 QUALITY ASSURANCE

1.4.1 Design Data

1.4.1.1 Containment System

Submit complete design drawings and calculations for the scaffolding and containment system, including an analysis of the loads which will be added to the structure by the containment system and waste materials. A registered engineer shall approve calculations and scaffold system design.

1.4.2 Test Reports

1.4.2.1 Coatings Qualification Test Reports

Submit test results from independent laboratory of representative samples of each coating material. U.S. Department of Defense laboratories are considered to be independent laboratories for purposes of compliance with "QUALIFICATION INSPECTION" requirements herein. Samples must have been tested within the last three years. Submit results for epoxy materials as required in article entitled "QUALIFICATION INSPECTION" of MIL-DTL-24441, and as revised by article entitled "Coating System" herein. Note that requirement for "QUALIFICATION INSPECTION" is a pre-qualification requirement, and involves the same testing required for listing in the Qualified Products List of the respective material. See appropriate Military Specification for specific test requirements.

1.4.2.2 Recycled Metallic Abrasive Field Test Reports (Daily and Weekly)

Submit test results from independent laboratory of daily and weekly Quality Control testing required by SSPC AB 2.

1.4.3 Certificates

1.4.3.1 Work Plan

Submit a written plan describing in detail all phases of coating operations. Address work sequencing, surface preparation, coating application, recoat and cure time projections, as well as how each step will be controlled, tested, and evaluated. Describe process of determining the existing surface profile under paint, and procedures for ensuring that the profile is not increased beyond the maximum profile specified herein. Describe equipment and methods used to measure and monitor weather conditions, including but not limited to temperature, relative humidity, and dew point. Provide detailed procedures, including manufacturer's instructions, for repairing defects in the coating film such as runs, drips, sags, holidays, overspray, etc. Address safety measures, work scheduling around weather, and record keeping. Generally, the Epoxy Coating on the Concrete base shall be coated first. Steel tank and piping erected, Exterior and Interior Epoxy coating systems applied. Then

1.4.3.2 Qualifications of Certified Industrial Hygienist (CIH)

Submit name, address, telephone number, FAX number, and e-mail address of the independent third party CIH. Submit documentation that hygienist is certified by the American Board of Industrial Hygiene in comprehensive practice, including certification number and date of certification/recertification. Provide evidence of experience with hazards involved in industrial coating application work.

1.4.3.3 Qualifications of Testing Laboratory for Coatings

Submit name, address, telephone number, FAX number, and e-mail address of the independent third party laboratory selected to perform testing of coating samples for compliance with specification requirements. Submit documentation that laboratory is regularly engaged in testing of paint samples for conformance with specifications, and that persons performing analyses are qualified.

1.4.3.4 Qualifications of Testing Laboratory for Abrasive

Submit name, address, telephone number, FAX number, and e-mail address of the independent third party laboratory selected to perform testing of abrasive for compliance with specification requirements. Submit documentation that laboratory has experience in testing samples of abrasive for conformance with specifications, and that persons performing analyses are qualified.

1.4.3.5 Qualifications of Coating Contractors

Submit the name, address, telephone number, FAX number, and e-mail address of the contractor that will be performing all surface preparation and coating application. Submit evidence that key personnel have successfully performed surface preparation and application of coatings on industrial steel structures on a minimum of three separate projects within the past three years. List information by individual and include the following:

a. Name of individual and proposed position for this work.

b. Information about each previous assignment including:

Position or responsibility
Employer (if other than the Contractor)
Name of facility owner
Mailing address, telephone number, and telex number (if non-US) of facility owner
Name of individual in facility owner's organization who can be contacted as a reference
Location, size and description of structure
Dates work was carried out
Description of work carried out on structure

1.4.3.6 Qualifications of Coating Manufacturer's Representative

Evidence of experience and training of the Coating Manufacturer’s Representative(s), including name, phone number and address, a statement from the coating manufacturer certifying that the representative has successfully completed all of the manufacturer’s training for material storage, mixing, application, and testing, has been directly involved in evaluation and application of industrial coatings for not less than 10 steel structures within the last 5 years, and is not an employee of the Contractor. The manufacturer's representative shall advise on surface preparation, inspections, surface repair materials and methods, material handling, batching and mixing, application, curing, and testing.

1.4.3.7 Coating Materials

Provide manufacturer's certification of conformance to contract requirements.

1.4.3.8 Coating System Component Compatibility

Provide certification from each manufacturer of components of the coating system, epoxy primer and epoxy intermediate coat that the supplied coating material is suitable for use in the specified coating system. Each manufacturer shall identify the specific products, including manufacturer's name, which their product may be used with. The certification shall provide the name of the manufacturer that will provide technical support for the entire system. When all coating materials are manufactured by one manufacturer, this certification is not required.

1.4.3.9 Non-metallic Abrasive

Provide manufacturer's certification of conformance to contract requirements and provide copies of test results.

1.4.3.10 Metallic Abrasive

Provide manufacturer's certification of conformance to contract requirements and provide copies of test results.

1.4.4 Product Data

1.4.4.1 Coating System Instructions

Submit manufacturer's printed instructions including detailed mixing and application procedures, number and types of coats required, minimum and maximum application temperatures, and curing procedures. Include materials safety data sheets (MSDS) for materials to be used at the job site in accordance with 29 CFR 1926.59.

1.5 DELIVERY AND STORAGE

Ship, store, and handle materials in accordance with SSPC PA 1, and as modified

in this Section. Maintain temperature in storage spaces between 40 and 75 degrees F, and air temperature more than 5 degrees F above the dew-point at all times. Inspect materials for damage prior to use and return non-compliant materials to manufacturer. Remove materials with expired shelf life from base property immediately and notify the Contracting Officer. Expired materials may be returned to manufacturer, tested, and if compliant, issued a shelf life extension.

1.6 COATING HAZARDS

Ensure that employees are trained in all aspects of the safety plan. Specified coatings may have potential health hazards if ingested or improperly handled. The coating manufacturer's written safety precautions shall be followed throughout mixing, application, and curing of the coatings. During all cleaning, cleanup, surface preparation, and paint application phases, ensure that employees are protected from toxic and hazardous chemical agents which exceed concentrations in 29 CFR 1910.1000. Comply with respiratory protection requirements in 29 CFR 1910.134. The CIH shall approve work procedures and personal protective equipment.

1.7 JOB SITE REFERENCES

Make available to the Contracting Officer at least one copy each of ASTM D3276, ASTM D3925, ASTM D4285, ASTM D4417, SSPC SP COM, SSPC SP 1, SSPC SP 7, SSPC SP 10, SSPC PA 1, SSPC PA 2, SSPC Guide 6, SSPC Guide 12, SSPC Guide to VIS 1, SSPC VIS 1, and an SSPC Certified Contractor Evaluation Form at the job site.

1.8 PRE-APPLICATION MEETING

After approval of submittals but prior to the initiation of coating work, Contractor representatives, including at a minimum, project superintendent and QC manager, paint foreman, Contracting Officer representatives, coating inspector, and coating systems manufacturer's representative shall have a pre-application coating preparatory meeting. This meeting shall be in addition to the pre-construction conference. Specific items addressed shall include: work plan, safety plan, inspection standards, inspector qualifications and tools, test procedures, environmental control system, safety plan, and test logs. Notify Contracting Officer at least ten days prior to meeting.

PART 2 PRODUCTS

2.1 COATING SYSTEM

Alternate systems or products will not be considered. All primer and intermediate coat materials shall be supplied by one supplier. The entire coating system is intended to be applied in the field. Alternatively, surface preparation may be accomplished in the shop, following all temperature, humidity, and testing requirements listed herein, followed by an application of a hold-primer. Remove all shop-applied primer prior to final field surface preparation and coating system application. Adjust all shop preparation to avoid conflicts with final surface preparation requirements.

The Military specification epoxy products specified in this Section do not require approval for listing on the QPL prior to contract award, as indicated in paragraph 3.2 of MIL-DTL-24441. Testing of products by an independent laboratory to the "QUALIFICATION INSPECTION" requirements of MIL-DTL-24441 prior to contract award is required. See specific submittal requirements in Article entitled "Quality Assurance."

2.1.1 Zinc-Rich Epoxy Primer Coat

Epoxy polyamide, MIL-DTL-24441/19 (Formula 159, Type III).

2.1.2 Epoxy Intermediate Coat

Epoxy polyamide, MIL-DTL-24441/31 (Formula 152, Type IV, White (Tinted)). Tint to approximately FED-STD-595 color number 27778 parchment using pigment dispersions prepared for epoxy paint tinting. Manufacturer shall tint material and appropriately label. All other requirements of this Military Specification apply.

2.2 COATING SAMPLE COLLECTION AND SHIPPING KIT

Provide a kit that contains one quart can for the base of each coating material, an appropriately sized can for each activator, dipping cups for each component to be sampled, a shipping box sized for the samples to to be shipped, and packing material. Mark cans for the appropriate component. Provide shipping documents, including either pre-paid shipping or a shipper number that can be used by the Contracting Officer to arrange pickup, addressed to the approved coating testing laboratory.

2.3 ABRASIVE SAMPLE COLLECTION AND SHIPPING KIT

Provide a kit that contains one suitable plastic bag or container for each sample to be collected. Mark containers for the appropriate component. Provide shipping documents, including either pre-paid shipping or a shipper number that can be used by the Contracting Officer to arrange pickup, addressed to the approved coating testing laboratory.

2.4 SOLUBLE SALTS TEST KITS

2.4.1 Test Kit for Measuring Chlorides on Steel Surfaces

Provide test kits called CHLOR*TEST, as manufactured by CHLOR*RID International Inc. of Chandler, Arizona (www.chlor-rid.com) or equal. An "equal" test kit shall meet the following requirements:

a. Kit contains all materials,supplies, tools and instructions for field testing and on-site quantitative evaluation;

b. Kit extract solution is acidic, factory pre-measured, pre-packaged, and of uniform concentration;

c. Kit components and solutions are mercury free and environmentally friendly;

d. Kit contains a factory sealed titration device;

e. Kit contains new materials and solutions for each test;

f. Test container (vessel, sleeve, cell. etc.) creates a sealed, encapsulated environment during chloride ion extraction;

g. Test container is suitable for testing the following steel surfaces: horizontal (up/down configuration), vertical, flat, curved, smooth, pitted, and rough;

h. Kit uses test container, with resulting chloride ion extract solution, as the titration container;

i. Chloride ion concentration is directly measured in micrograms per square centimeter without using either conversion charts or tables.

2.5 ABRASIVE

The referenced abrasive specifications have maximum limits for soluble salts

contamination, however, this maximum level of contamination does not guarantee that contamination will not be transferred to the steel surface during abrasive blasting. Other factors such as on-site handling and recycling can allow contamination of abrasive. Contractors are cautioned to verify that the chosen abrasive, along with work and storage processes, allow the final surface cleanliness requirements to be achieved. Successful testing of chlorides in abrasive does not negate the final acceptance testing of steel surfaces.

Interpret MIL-A-22262 to include the meaning that abrasive material contains a maximum one percent by weight of any toxic substance listed in either Table Z-1, Z-2, or Z-3 or 29 CFR 1910-SUBPART Z, with the exception of inert or nuisance dust materials, arsenic, beryllium, cadmium, cobalt, lead, mercury, rhodium, silver, tellurium, thallium, and uranium.

2.5.1 Non-metallic Abrasive

Conform to MIL-A-22262, Type I (Inorganic materials) except that the gross gamma radioactivity shall not exceed 5 picocuries per gram. Use sampling procedures and testing frequencies as prescribed in MIL-A-22262. Use abrasive that is specifically selected and graded to provide a sharp, angular profile to the specified depth. Do not use ungraded abrasive. Make adjustments to processes or abrasive gradation to achieve specified surface profile. Recycled non-metallic abrasive shall meet all requirements of the specification each time that it is placed in the blast pot.

2.5.2 Metallic Abrasive

2.5.2.1 New and Remanufactured Steel Grit

Conform to the chemical and physical properties of SSPC AB 3 except that the gross gamma radioactivity shall not exceed 5 picocuries per gram.

2.5.2.2 Recycled Steel Grit

Conform to the chemical and physical properties of SSPC AB 2

PART 3 EXECUTION

3.1 COATING AND ABRASIVE SAMPLE COLLECTION AND TESTING

3.1.1 Coating Sample Collection

Notify Contracting Officer three days in advance of sampling. The Contracting Officer and either the QC Manager shall witness all sampling. Provide a sample collection kit as required in Article entitled "Coating Sample Collection and Shipping Kit." Obtain a one quart sample of each batch of each base material, and proportional samples of each activator based on mix ratio, by random selection from sealed containers in accordance with ASTM D3925. Prior to sampling, mix contents of each sealed container to ensure uniformity. A batch is defined as that quantity of material processed by the manufacturer at one time and identified by number on the label. Identify samples by designated name, specification number, batch number, project contract number, sample date, intended use, and quantity involved. The Contracting Officer will take possession of the packaged samples, contact the shipping company to arrange for pickup, and relinquish the samples only to the shipping representative for shipment to the approved laboratory for testing as required by the paragraph entitled "Coating Sample Testing."

3.1.2 Abrasive Sample Collection

Notify Contracting Officer three days in advance of sampling. The Contracting Officer and either the QC Manager shall witness all sampling. Provide suitably sized containers for each sample to be taken. Provide a sample

collection kit as required in Article entitled "Abrasive Sample Collection and Shipping Kit." For purposes of quality conformance inspection, a lot shall consist of all abrasive materials of the same type from a single, uniform batch produced and offered for delivery at one time. Obtain samples of each abrasive lot using the sampling techniques and schedule of MIL-A-22262. The addition of any substance to a batch shall constitute a new lot. Identify samples by designated name, specification number, lot number, project contract number, sample date, intended use, and quantity involved. The Contracting Officer will take possession of the packaged samples, contact the shipping company to arrange for pickup, and relinquish the samples only to the shipping representative for shipment to the approved laboratory for testing as required by the Article entitled "Abrasive Sample Testing."

3.1.3 Coating Sample Test Reports

Test samples of all primer and intermediate materials for compliance with requirements of Table I. Reject entire batch represented by samples that fail one or more tests, reselect, and retest samples.

3.1.4 Abrasive Sample Test Reports

Test samples of abrasive materials for compliance with the appropriate abrasive specification. Reject entire lot represented by samples that fail one or more tests, reselect, and retest samples.

3.2 SURFACES TO BE COATED

Coat exterior surfaces of tank including steel roof, shell, and Leakage Test Pipe.

3.3 LIGHTING

Provide lighting for all work areas as prescribed in SSPC Guide 12.

3.4 Containment

The contractor shall design and provide a containment system for the capture, containment, collection, storage and disposal of the waste materials generated by the work under this specification Section, to meet the requirements of SSPC Guide 6, Class 3. Waste materials covered by this paragraph shall not include any material or residue from removal of coatings containing lead, chromium, cadmium, PCB, or any other hazardous material. It is the contractors responsibility to insure the feasibility and workability of the containment system. The contractor shall perform his operations and work schedule in a manner as to minimize leakage of the containment system. The containment system shall be properly maintained and shall not deviate from the approved drawings, without the Contracting Officers approval. If at any time during the execution of the work, the containment system fails to function satisfactory in the opinion of the Contracting Officer, the contractor shall suspend all operations, except those required to minimize adverse impact on the environment or government property. Operations shall not resume until modifications have been made to correct the cause of the failure. Modifications shall be approved by the Contracting Officer.

3.5 SURFACE PREPARATION

3.5.1 Abrasive Blasting Equipment

Use abrasive blasting equipment of conventional air, force-feed, or pressure type. Maintain a minimum pressure of 95 psig at nozzle. Confirm that air supply for abrasive blasting is free of oil and moisture when tested in accordance with ASTM D4285. Test air quality at each startup, but in no case less often than every five operating hours.

3.5.2 Surface Standard

Inspect surfaces to be coated, and select plate with similar properties and surface characteristics for use as a surface standard. Blast clean one or more 1 foot square steel panels as specified in Article entitled "Surface Preparation." Record blast nozzle type and size, air pressure at nozzle and compressor, distance of nozzle from panel, and angle of blast to establish procedures for blast cleaning. Measure surface profile in accordance with ASTM D4417. When the surface standard complies with all specified requirements, seal with a clearcoat protectant. Use the surface standard for comparison to abrasive blasted surfaces throughout the course of work.

3.5.3 Pre-Preparation Testing for Surface Contamination

Perform testing, abrasive blasting, and testing in the prescribed order.

3.5.3.1 Pre-Preparation Testing for Oil and Grease Contamination

Inspect all surfaces for oil and/or grease contamination using two or more of the following inspection techniques: 1) Visual inspection, 2) WATER BREAK TEST, 3) CLOTH RUB TEST. Reject oil and/or grease contaminated surfaces, clean using a water based pH neutral degreaser in accordance with SSPC SP 1, and recheck for contamination until surfaces are free of oil and grease.

WATER BREAK TEST - Spray atomized mist of distilled water onto surface, and observe for water beading. If water "wets" surface rather than beading up, surface can be considered free of oil or grease contamination. Beading of water (water forms droplets) is evidence of oil or grease contamination.

CLOTH RUB TEST - Rub a clean, white, lint free, cotton cloth onto surface and observe for discoloration. To confirm oil or grease contamination in lightly stained areas, a non-staining solvent may be used to aid in oil or grease extraction. Any visible discoloration is evidence of oil or grease contamination.

3.5.3.2 Pre-Preparation Testing for Soluble Salts Contamination

Test surfaces for soluble salts, and wash as required, prior to abrasive blasting. Soluble salt testing is also required in Article entitled "Pre-Application Testing for Soluble Salts Contamination" as a final acceptance test of prepared surfaces after abrasive blasting, and successful completion of this phase does not negate that requirement. This phase is recommended since pre-preparation testing and washing are generally more advantageous than attempting to remove soluble salt contamination after abrasive blasting. Effective removal of soluble salts will require removal of any barrier to the steel surface, including rust. This procedure may necessitate combinations of wet abrasive blasting, high pressure water rinsing, and cleaning using a solution of water washing and soluble salts remover. The soluble salts remover shall be acidic, biodegradable, nontoxic, noncorrosive, and after application, will not interfere with primer adhesion. Delays between testing and preparation, or testing and coating application, may allow for the formation of new contamination. Use potable water, or potable water modified with soluble salt remover, for all washing or wet abrasive blasting. Test methods and equipment used in this phase are selected at the Contractor's discretion.

3.5.4 Abrasive Blasting

Abrasive blast steel surfaces to near-white metal in accordance with SSPC SP 10. Prepared surfaces shall conform to SSPC VIS 1 and SSPC Guide to VIS 1 and shall match the prepared test-panels. Provide a 2 to 3 mil surface profile. Reject profile greater than 3 mils, discontinue abrasive blasting, and modify processes and materials to provide the specified profile. Measure surface

profile in accordance with ASTM D4417. Measure profile at rate of three tests for the first 1000 square feet plus one test for each additional 1000 square feet or part thereof. Provide two additional measurements for each non-compliant measurement. When surfaces are reblasted for any reason, retest profile as specified. If Method C of ASTM D4417 is used to measure profile, attach test tapes to Daily Inspection Reports. Following abrasive blasting, remove dust and debris by brushing, blowing with oil-free and moisture-free compressed air, or vacuum cleaning. Time interval between abrasive blasting and application of primer shall not exceed eight hours.

3.5.5 Disposal of Used Abrasive

Dispose of used abrasive off Government property in accordance with Federal, State, and Local mandated regulations.

3.5.6 Pre-Application Testing For Surface Contamination

3.5.6.1 Pre-Application Testing for Oil and Grease Contamination

Ensure tank surfaces are free of contamination as described in Article entitled "Pre-Preparation Testing for Oil and Grease Contamination," except that only questionable areas need be checked for beading of water misted onto surface.

3.5.6.2 Pre-Application Testing for Soluble Salts Contamination

Test surfaces for chloride contamination using the Test Kit described in article entitled "Test Kit for Measuring Chlorides on Steel Surfaces." Test all surfaces at rate of three tests for the first 1000 square feet plus one test for each additional 2000 square feet or part thereof. Perform 30% of tests on bare steel at welds, divided equally between horizontal and vertical welds. One or more readings greater than 5 micrograms per square centimeter of chlorides is evidence of chloride contamination. Reject contaminated surfaces, wash as discussed in article entitled "Pre-Preparation Testing for Soluble Salts Contamination," allow to dry, and re-test until all required tests show allowable results. Reblast tested and cleaned areas as required. Label all test tubes and retain for test verification.

3.5.6.3 Pre-Application Testing for Surface Cleanliness

Apply coatings to dust free surfaces. To test surfaces, apply strip of clear adhesive tape to surface and rub onto surface with finger. When removed, the tape should show little or no dust, blast abrasive, or other contaminant. Reject contaminated surfaces and retest. Test surfaces at rate of three tests for the first 1000 square feet plus one test for each additional 1000 square feet or part thereof. Provide two additional tests for each failed test or questionable test. Attach test tapes to Daily Inspection Reports.

3.6 MIXING AND APPLICATION OF COATING SYSTEM

3.6.1 Preparation of Coating Materials for Application

Each of the primer and intermediate materials is a two-component material supplied in separate containers.

3.6.1.1 Mixing Primer and Intermediate Coat Materials

Mix in accordance with manufacturer's instructions, which may differ for each product. Do not mix partial kits, or alter mix ratios. Mix materials in same temperature and humidity conditions specified in article entitled "Delivery and Storage." Allow mixed material to stand for the required induction time based on its temperature.

3.6.1.2 Pot Life

Apply mixed products within stated pot life for each product. Stop applying when material becomes difficult to apply in a smooth, uniform wet film. Add all required solvent at time of mixing. Do not add solvent to extend pot life. Pot life is based on standard conditions at 70 degrees F and 50 percent relative humidity. For every 18 degrees F rise in temperature, pot life is reduced by approximately half, and for every 18 degrees F drop it is approximately doubled. Usable pot life depends on the temperature of the material at the time of mixing and the sustained temperature at the time of application. Other factors such as the shape of the container and volume of mixed material may also affect pot life. Precooling or exterior icing of components for at least 24 hours to a minimum of 50 degrees F in hot climates will extend pot life. Following are approximate pot life times:

Epoxy primer and intermediate and top coats materials 4 hours

3.6.1.3 Application Conditions and Recoat Windows

The application condition requirements for the coating system are very time and temperature sensitive, and are intended to avoid the delamination problems frequently found on industrial structures. Plan coating application to ensure that specified temperature, humidity, and condensation conditions are met. If conditions do not allow for orderly application of primer, stripe coat and intermediate coat use appropriate means of controlling air and surface temperatures, as required. Partial or total enclosures may be required, as well as other measures, to control conditions to allow for orderly application of all required coats.

Apply coating only when ambient air and steel temperatures are between 60 and 100 degrees F, and steel surface temperature is more than 5 degrees F above the dew-point of the ambient air during application and the first four hours for epoxy. Do not apply coatings above 100 degrees F or below 60 degrees F.

Use Table entitled "RECOAT WINDOWS" to determine appropriate recoat windows for each coat after the initial coat. Apply each coating during appropriate RECOAT WINDOW.

If coating is not applied during RECOAT WINDOW, apply during EXTENDED RECOAT WINDOW. Application of any epoxy coat within the EXTENDED RECOAT WINDOW requires application of a TACK COAT prior to applying any full coat. Perform cure test immediately prior to application of TACK COAT to determine condition of applied coating. If CURE TEST indicates that surface is fully cured, provide GLOSS REMOVAL prior to application of TACK COAT.

If coating is not applied during EXTENDED RECOAT WINDOW, or if surface temperature exceeds 120 degrees F between applications, wash surface with water and detergent, rinse clean with fresh water and allow surface to dry thoroughly, provide GLOSS REMOVAL, apply TACK COAT, where applicable, within 24 hours, and apply next full coat within TACK COAT RECOAT WINDOW.

RECOAT WINDOWS

EPOXY OVER EPOXY

Temperature degrees F	60-70	71-80	81-90	91-100	101-110	111-120
RECOAT WINDOW (Hrs.)	24-72	18-60	16-48	12-36	8-18	4-6
EXTENDED RECOAT WINDOW (Hrs.)	72-168	60-140	48-120	36-96	18-36	6-12
TACK COAT RECOAT WINDOW (Hrs.)	6-72	4-60	4-48	3-36	2-18	1-6

RECOAT WINDOWS

The temperature ranges shown in the table above are for determining recoat windows. Choose recoat window based on the highest surface temperature that was sustained for one or more hours between coats. This applies to the entire time between coats. Measure and record air and surface temperatures on hourly basis to determine appropriate recoat windows. If surface temperature goes above 100 degrees F, measure and record temperatures every half hour.

CURE TEST - Where indicated, test surface for cure using high-flash aromatic Naphtha only (cas #64742-95-6). Do not use aliphatic VMP Naphtha. Wipe surface with rag saturated with Naphtha, and check for surface tackiness, loss of gloss, or other indications that solvent has softened surface. If softening is found on 95% of test sites, this is indication that coating has not fully cured, and GLOSS REMOVAL is not required if TACK COAT is applied within three hours and full coat is applied within the TACK COAT RECOAT WINDOW. Test surfaces at rate of three tests for the first 1000 square feet plus one test for each additional 1000 square feet or part thereof.

TACK COAT - Where indicated, apply coat of intermediate coat epoxy, at 1 to 2 mils WFT, then apply next specified full coat within TACK COAT RECOAT WINDOW. Thin TACK COAT material approximately 25% by volume, using appropriate epoxy thinner.

GLOSS REMOVAL - Where indicated, remove all gloss by hand sanding with 150-200 grit wet/dry sandpaper in a linear fashion, pressure wash or wipe down with a clean rag soaked with denatured alcohol to remove dust. Do not use rotary sanders or grinders.

3.6.2 Application of Coating System

Apply coatings in accordance with SSPC PA 1 and as specified herein. Apply coatings to surfaces that meet all stated surface preparation requirements.

After application of primer coat and prior to application of each subsequent coat, perform testing prescribed in article entitled "Pre-Application Testing For Surface Contamination," as necessary, to ensure minimal intercoat contamination. This testing may be reduced to one half of the prescribed rate for bare steel if the testing indicates no contamination when sampling is evenly distributed over surfaces being tested. If contamination is found between coats, revert to the specified testing rate. Generally, oil and grease contamination and soluble salts contamination are not encountered if subsequent coats are applied within specified recoat windows and unusual atmospheric events do not occur. Such atmospheric events as a coastal storm blowing onshore can bring unusual chloride contamination. Concern for intercoat contamination should be continually prevalent, and spot testing should be accomplished to verify satisfactory conditions. Where visual examination or spot testing indicates contamination, perform sufficient testing to verify non-contamination, or to define extent of contamination for appropriate treatment.

Apply each coat in a consistent wet film, at 90 degrees to previous coat. Ensure that primer and intermediate coat "cold joints" are no less than six inches from welds. Apply stripe coat by brush. Apply all other coats by spray application. Use appropriate controls to prevent airborne coating fog from drifting beyond 15 feet from the structure perimeter. Cover or protect all surfaces that will not be coated. The cleanliness, temperature, recoat windows, and airborne paint containment requirements may necessitate the use of enclosures, portable shelters, or other appropriate controls.

Apply coatings at the following specified thickness:

Coat	Desired Thickness Range Mils DFT	Minimum Mils DFT	Maximum Mils DFT
Primer	3 - 5	3	8
Intermediate	3 - 5	3	8
Total system	-----	6	14

3.6.2.1 Application of Primer

Apply primer coat, maintaining paint supply container height within 3 feet of the paint nozzle for applying zinc primer. Maintain constant agitation of paint pot to ensure that zinc does not settle in container.

3.6.2.2 Application of Stripe Coat

Apply a stripe coat of intermediate coat epoxy material within RECOAT WINDOW of primer, allowing sufficient dry time to allow application of intermediate coat within RECOAT WINDOW of primer. Apply by brush, working material into corners, crevices, angles, and welds, and onto outside corners and angles.

3.6.2.3 Application of Intermediate Coat

Apply intermediate coat within RECOAT WINDOW of primer coat.

3.6.2.4 Application of Topcoat

Make all required repairs to primer and intermediate coats as specified in paragraph entitled "Procedure for Holiday and Spot Repairs of Newly Applied Coating" .

3.6.2.5 Procedure for Holiday and Spot Repairs of Newly Applied Coating

Repair coating film defects at the earliest practicable time, preferably before application of the succeeding coat. Observe all requirements for soluble salts contamination, cleanliness between coats, and application conditions. Prepare defective area in accordance with SSPC SP 10, and feather coating as required to leave 4 inches of each succeeding coat feathered and abraded. Protect adjacent areas from damage and overspray. Remove dust and solvent wipe the prepared area plus an additional 4 inches beyond the prepared area with clean denatured alcohol. Apply each coat within RECOAT WINDOW of preceeding coat. Within four hours of preparation, apply zinc-rich primer to prepared steel and feather onto prepared primer. Apply intermediate coat to primed area and feather to prepared intermediate area. Apply topcoat to intermediate coat and feather to prepared topcoat. Apply each repair coat to approximate thickness of surrounding coating system.

3.6.2.6 Structure Occupancy After Coating Application

Use clean canvas or other approved shoe covers when walking on coated surfaces, regardless of curing time allowed. For heavily trafficked areas, provide cushioned mats for additional protection.

3.7 FIELD TESTS AND INSPECTION

For marking of tank surfaces, use chalk for marking bare steel, and water based markers for marking coated surfaces, and remove marks prior to coating. Do not use any wax or grease based markers, or any other markers that leave a residue or stain.

3.7.1 Coating Inspector

The coating inspector shall be considered a QC Specialist, shall work for the QC

Manager, and shall be qualified in accordance with Section 01451. The Coating Inspector shall be present during all pre-preparation testing, surface preparation, coating application, initial cure of the coating system, and during all coating repair work. The Coating Inspector shall provide complete documentation of conditions and occurrences on the job site, and be aware of conditions and occurrences that are potentially detrimental to the coating system. The requirements for inspection listed in this Section are in addition to the QC inspection and reporting requirements outlined in Section 01451. The Coating Inspector shall prepare a project reference sheet outlining all requirements, tests, test methods, and evaluation criteria, and hold regular meetings with contractor personnel, including nozzlemen and applicators, to review requirements and evaluation criteria for upcoming work in advance of the work.

3.7.2 Field Inspection

3.7.2.1 Inspection Requirements

Accomplish field inspection in accordance with ASTM D3276 and as required herein. Perform all appropriate tests and inspections, except that viscosity and weight per gallon measurements are not required. Provide all tools and instruments required to perform the required testing, as well as any tools or instruments that the inspector considers necessary to perform the required inspections and tests. Document each inspection and test, including required hold points and other required inspections and tests, as well as those inspections and tests deemed prudent from on-site evaluation, as follows:

a. Location or area;
b. Purpose (required or special);
c. Method;
d. Criteria for evaluation;
e. Results;
f. Determination of compliance;
g. List of required rework;
h. Observations.

Collect and record Environmental Conditions as described in ASTM D3276 on a 24 hour basis, as follows:

a. During surface preparation, every hour or when changes occur;
b. During coating application and the first four days of initial cure, every hour, or when changes occur;
c. Overnight hours may be excluded if conditions are measured and recorded through 1800 hours and then prior to dawn the next day;
d. Note location, time, and temperature of the highest and lowest surface temperatures each day.
e. Use a non-contact thermometer to locate temperature extremes, then verify with contact thermometers.

Document all equipment used in inspections and testing, including manufacturer, model number, serial number, last calibration date and future calibration date, and results of on-site calibration performed.

3.7.2.2 Daily Inspection Reports

Submit one copy of daily inspection report completed each day when performing work under this Section, to the Contracting Officer. Use ASTM D3276 Appendix X1 Inspection Checklist to monitor daily activity and prepare Daily Inspection Report. Use of forms containing entry blocks for all required data is encouraged. The data may be in any format, but must be legible and presented so that it can be easily interpreted. Note all non-compliance issues, and all issues that were reported for rework in accordance with QC procedures of Section 01451. Submit report within 24 hours of date recorded on the report.

3.7.2.3 Inspection Logbook

A continuous record of all activity related to this Section shall be maintained in an Inspection Logbook on a daily basis. The logbook shall be hard or spiral bound with consecutively numbered pages, and shall be used to record all information provided in the Daily Inspection Reports, as well as other pertinent observations and information. The Coating Inspector's Logbook that is sold by NACE is satisfactory. Submit the original Inspection Logbook to the Contracting Officer upon completion of the project and prior to final payment.

3.7.2.4 Inspection Equipment

All equipment shall be in good condition, operational within its design range, and calibrated as required by the specified standard for use of each device.

3.7.3 Hold Points for Quality Control Inspections

Provide appropriate QC inspections at the following hold-points:

Step	Action
Prior to preparation of structure(s) for cleaning and repair	Safety inspection
After cleaning of structure(s) and prior to abrasive blasting	1. Safety inspection, removal of dirt, trash, debris, and any hindrance to abrasive blasting. 2. Surface inspection for oil, grease, soluble salts, or other contaminants
Initiation of abrasive blasting, and at each work stoppage	1. Confirm environmental conditions are suitable for abrasive blasting and coating, and are expected to remain suitable to the point where the coating will be unaffected. 2. Surface inspection to insure all aspects of surface preparation are properly addressed, as specified in article entitled "Surface Preparation." 3. Test compressor air for oil and water contamination
After abrasive blasting	Surface inspection to insure all aspects of surface preparation are properly addressed, as specified in article entitled "Surface Preparation."
Immediately prior to coating application - provide for each coating application evolution	1. Confirm environmental conditions are suitable for coating application and are expected to remain suitable to the point where the coating will be unaffected. 2. Surface inspection to insure all aspects of surface preparation are properly addressed, as specified in article entitled "Surface Preparation." 3. Confirm that testing equipment for

	monitoring for hazardous conditions during coating application are working properly and are prepared for use as outlined in contractor's Safety Plan.
During and after coating application.	Coating application inspection per paragraphs entitled "Application of Coating System" and "Field Tests and Inspection".
After final cleanup	Clean-up inspection specified in the paragraph entitled "Final Cleanup."

3.8 FINAL CLEANUP

Following completion of the work, remove debris, equipment, and materials from the site. Remove temporary connections to Government or Contractor furnished water and electrical services. Restore existing facilities in and around the work areas to their original condition.

TABLE 1
COATING QUALITY CONFORMANCE INSPECTION REQUIREMENTS

Table Ia - Zinc-rich Epoxy Primer Coat MIL-DTL-24441/19 Formula 159

Test	Component A		Component B		Mixed	
	Min.	Max.	Min.	Max.	Min.	Max.
Pigment content, percent (zinc dust)	---	---	81.5	85.5	---	---
Volatiles, percent	42.8	44.3	8.0	8.4	---	---
Non-volatile vehicle percent	53.7	57.7	8.3	8.7	---	---
Weight,						
Kilograms/liter	0.87	1.01	3.30	3.40	---	---
Pounds/gallon	7.3	8.4	27.5	28.4	---	---
Flashpoint						
Degrees C	35.6	---	37.8	---	---	---
Degrees F	96	---	100	---	---	---
Consistency, grams	---	---	250	500	---	---
Set to touch time, hours at 23 degrees C, 73 degrees F	---	---	---	---	---	2
Dry-hard time, hours at 23 degrees C, 73 degrees F	---	---	---	---	---	8
Pot life, hours at 23 degrees C, 73 degrees F	---	---	---	---	4	---
Sag resistance						
Micrometers	---	---	---	---	300	---
Mils	---	---	---	---	12	---
VOC						
Grams/liter	---	---	---	---	---	304
Pounds/gallon	---	---	---	---	---	2.5

NOTES:
Test methods as specified in MIL-DTL-24441.

TABLE 1
COATING QUALITY CONFORMANCE INSPECTION REQUIREMENTS

Table Ib. - Epoxy Intermediate Coat MIL-DTL-24441/31 Formula 152 Type IV (White (Tinted))

Test	Component A		Component B		Mixed	
	Min.	Max.	Min.	Max.	Min.	Max.
Pigment content, percent	44.0	49.0	33.0	38.0	---	---
Volatiles, percent	29.0	35.0	16.0	21.0	---	---
Non-volatile vehicle, percent	17.5	23.5	44.0	49.0	---	---
Coarse particles, percent	---	0.3	---	0.3	---	---
Consistency, grams	180	320	300	470	---	---
Weight						
Kilograms/liter	1.39	1.45	1.29	1.35	---	---
Pounds per gallon	11.6	12.1	10.8	11.3	---	---
Set to touch, hours at 23 degrees C, 73 degrees F	---	---	---	---	---	3
Dry-hard time, hours at 23 degrees C, 73 degrees F	---	---	---	---	---	8
Fineness of grind, Hegman	4	---	4	---	---	---
Flashpoint						
Degrees C	35.5	---	37.8	---	---	---
Degrees F	96	---	100	---	---	---
Titanium dioxide, percent of pigment	91	---	---	---	---	---
Pot life, hours at 23 degrees C, 73 degrees F	---	---	---	---	4	---
Sag resistance						
Micrometers	---	---	---	---	300	---
Mils	---	---	---	---	12	---
Color of dry film to approximate color of FED-STD 595 color 27778	---	---	---	---	Conform	
Contrast ratio, at 75 micrometers, 3 mils DFT	---	---	---	---	0.98	---
VOC						
Grams/liter	---	---	---	---	---	340
Pounds/gallon	---	---	---	---	---	2.8

GENERAL NOTES:
Test methods as specified in MIL-DTL-24441.
Where "Conform" is indicated, refer to specific requirements of MIL-DTL-24441/31.

-- End of Section --

SECTION TABLE OF CONTENTS

DIVISION 09 - FINISHES

SECTION 09973

INTERIOR COATING OF WELDED STEEL PETROLEUM FUEL TANKS

09/01

PART 1 GENERAL

1.1 REFERENCES
1.2 DEFINITIONS
1.3 SUBMITTALS
1.4 QUALITY ASSURANCE
1.4.1 Design Data
1.4.1.1 Environmental Control System
1.4.2 Test Reports
1.4.2.1 Recycled Metallic Abrasive Field Test Reports (Daily and Weekly)
1.4.3 Certificates
1.4.3.1 Work Plan
1.4.3.2 Qualifications of Certified Industrial Hygienist (CIH)
1.4.3.3 Qualifications of Testing Laboratory for Coatings
1.4.3.4 Qualifications of Testing Laboratory for Abrasive
1.4.3.5 Qualifications of Coating Contractors
1.4.3.6 Qualifications of Coating Manufacturer's Representative
1.4.3.7 Epoxy Coating Materials
1.4.3.8 Non-metallic Abrasive
1.4.3.9 Metallic Abrasive
1.4.4 Product Data
1.4.4.1 Coating System Instructions
1.5 DELIVERY AND STORAGE
1.6 COATING HAZARDS
1.7 WORK SEQUENCE
1.8 JOB SITE REFERENCES
1.9 PRE-APPLICATION MEETING

PART 2 PRODUCTS

2.1 COATING SYSTEM
2.1.1 Epoxy Primer, Intermediate, and Topcoats
2.1.1.1 Epoxy Primer Coat
2.1.1.2 Epoxy Intermediate Coat
2.1.1.3 Epoxy Topcoat
2.2 COATING SAMPLE COLLECTION AND SHIPPING KIT
2.3 ABRASIVE SAMPLE COLLECTION AND SHIPPING KIT
2.4 SOLUBLE SALTS TEST KITS
2.4.1 Test Kit for Measuring Chlorides on Steel Surfaces
2.5 ABRASIVE
2.5.1 Non-metallic Abrasive
2.5.2 Metallic Abrasive
2.5.2.1 New and Remanufactured Steel Grit
2.5.2.2 Recycled Steel Grit

PART 3 EXECUTION

3.1 COATING AND ABRASIVE SAMPLE COLLECTION AND TESTING
3.1.1 Coating Sample Collection
3.1.2 Abrasive Sample Collection
3.1.3 Coating Sample Test Reports
3.1.4 Abrasive Sample Test Reports

3.2 LIGHTING
3.3 ENVIRONMENTAL CONDITIONS
3.3.1 Control System Requirements
3.3.1.1 Humidity Control for Surface Preparation and Primer Application
3.3.1.2 Humidity Control for Application of Intermediate and Topcoats and Initial Curing
3.4 EQUIPMENT USED IN TANK
3.5 SURFACES TO BE COATED
3.6 SURFACE PREPARATION
3.6.1 Abrasive Blasting Equipment
3.6.2 Surface Standard
3.6.3 Pre-Preparation Testing for Surface Contamination
3.6.3.1 Pre-Preparation Testing for Oil and Grease Contamination
3.6.3.2 Pre-Preparation Testing for Soluble Salts Contamination
3.6.4 Abrasive Blasting
3.6.5 Disposal of Used Abrasive
3.6.6 Pre-Application Testing For Surface Contamination
3.6.6.1 Pre-Application Testing for Oil and Grease Contamination
3.6.6.2 Pre-Application Testing for Soluble Salts Contamination
3.6.6.3 Pre-Application Testing for Surface Cleanliness
3.7 MIXING AND APPLICATION OF SEALANT AND COATING SYSTEM
3.7.1 Preparation of Coating Materials for Application
3.7.1.1 Mixing
3.7.1.2 Pot Life
3.7.1.3 Application Conditions and Recoat Windows
3.7.2 Application of Coating System
3.7.2.1 Application of Stripe Coat
3.7.2.2 Application of Primer
3.7.2.3 Application of Intermediate Coat
3.7.2.4 Application of Topcoat
3.7.3 Holiday Testing
3.7.4 Procedure for Holiday and Spot Repairs of Newly Applied Coating
3.7.5 Tank Occupancy After Coating Application
3.7.6 Extended Cure of Coating System Prior to Immersion Service
3.8 FIELD TESTS AND INSPECTION
3.8.1 Coating Inspector
3.8.2 Field Inspection
3.8.2.1 Inspection Requirements
3.8.2.2 Daily Inspection Reports
3.8.2.3 Inspection Logbook
3.8.3 Inspection Equipment
3.8.3.1 Black Light
3.8.4 Hold Points for Quality Control Inspections
3.9 FINAL CLEANUP

-- End of Section Table of Contents --

SECTION 09973

INTERIOR COATING OF WELDED STEEL PETROLEUM FUEL TANKS
09/01

PART 1 GENERAL

Contractor shall coat the interior of the following tanks

Two (2) each 10,000 BBL fuel tanks each containing
Twelve (12) interior supports
Three (3) each 36 inch roof manholes
Three (3)each 32 inch roof nozzles
48 inch roof nozzle
8 inch roof nozzle
Internal Fill Pipe
Ladder

Note: The Contractor shall coat the exterior first, install exterior geosynthetic drainage layer, then pour concrete walls and roof, and dewater the tank. After dewatering the tanks and placement of concrete is complete the Contractor can coat the interior of the tanks.

1.1 REFERENCES

The publications listed below form a part of this specification to the extent referenced. The publications are referred to in the text by the basic designation only.

AMERICAN PETROLEUM INSTITUTE (API)

API 653	(1997 Am. 2) Tank Inspection, Repair, Alteration, and Reconstruction

AMERICAN SOCIETY FOR TESTING AND MATERIALS (ASTM)

ASTM D3276	(1996) Standard Guide for Painting Inspectors (Metal Substrates)
ASTM D3925	(1991) Sampling Liquid Paints and Related Pigmented Coatings
ASTM D4285	(1999) Indicating Oil or Water in Compressed Air
ASTM D4417	(1993) Field Measurement of Surface Profile of Blast Cleaned Steel

U.S. NATIONAL ARCHIVES AND RECORDS ADMINISTRATION (NARA)

29 CFR 1910.134	Respiratory Protection
29 CFR 1910.1000	Air Contaminants
29 CFR 1910-SUBPART Z	Toxic and Hazardous Substances
29 CFR 1926.59	Hazard Communication

U.S. GENERAL SERVICES ADMINISTRATION (GSA)

FED-STD-595	(Rev. B) Colors Used in Government Procurement

U.S. DEPARTMENT OF DEFENSE (DOD)

MIL-A-22262	(Rev. B) Abrasive Blasting Media Ship Hull Blast Cleaning
MIL-DTL-24441	(Rev. C; Supp. 1) Paint, Epoxy-Polyamide
MIL-DTL-24441/29	(Rev. A) Paint, Epoxy-Polyamide, Green Primer, Formula 150, Type IV
MIL-DTL-24441/31	(Rev. A) Paint, Epoxy-Polyamide, White, Formula 152, Type IV

NACE INTERNATIONAL (NACE)

NACE RP0178	(1995) Fabrication Details, Surface Finish Requirements, and Proper Design Considerations for Tanks and Vessels to be Lined for Immersion Service
NACE RP0188	(1999) Discontinuity Testing of Protective Coatings

THE SOCIETY FOR PROTECTIVE COATINGS (SSPC)

SSPC AB 2	(1999) Cleanliness of Recycled Ferrous Metallic Abrasives
SSPC AB 3	(1997) Newly Manufactured or Re-Manufactured Steel Abrasives
SSPC Guide to VIS 1	(1989) Guide to Visual Standard for Abrasive Blast Cleaned Steel
SSPC VIS 1	(1989) Visual Standard for Abrasive Blast Cleaned Steel (Standard Reference Photographs)
SSPC SP COM	(2000) Surface Preparation Commentary
SSPC SP 1	(1982) Solvent Cleaning
SSPC SP 5	(1994) White Metal Blast Cleaning
SSPC SP 7	(1994) Brush-Off Blast Cleaning
SSPC PA 1	(2000) Shop, Field, and Maintenance Painting
SSPC PA 2	(1997) Measurement of Dry Paint Thickness with Magnetic Gages
SSPC Guide 12	(1998) Guide for Illumination of Industrial Painting Projects

1.2 DEFINITIONS

Definitions are provided throughout this Section, generally in the Article where used, and denoted by capital letters. The following definitions are used throughout this Section:

a. CEILING - interior tank surfaces that extend from the horizontal plane at the designated maximum fuel line upward, including the upper portion of the tank shell (walls), columns, structural steel, the underside of the roof plates and other steel components in this area.

b. SHELL - interior tank surfaces that extend along the vertical tank walls between the horizontal planes approximately 40 inches above the shell to bottom joint upward to the horizontal plane at the designated fuel line, including columns, wall plates, and other steel components in this area.

c. FLOOR - interior tank surfaces below the horizontal plane approximately 40 inches above the shell to bottom joint, including columns, wall plates, piping, pipe supports, bottom plates, and other steel components in this area.

1.3 SUBMITTALS

Submit the following in accordance with Section 01330, "Submittal Procedures."

SD-05, Design Data

Environmental Control System; G-RE

SD-06 Test Reports

Coating Sample Test Reports; G-RE

Abrasive Sample Test Reports; G-RE

Daily Inspection Reports; G-RE

Recycled Metallic Abrasive Field Test Reports (Daily and Weekly); G-RE

SD-07 Certificates

Work Plan; G-RE

Qualifications of Certified Industrial Hygienist (CIH); G-RE

Qualifications of Testing Laboratory for Coatings; G-RE

Qualifications of Testing Laboratory for Abrasive; G-RE

Qualifications of Coating Contractors; G-RE

Qualifications of Coating Manufacturer's Representative; G-RE

Epoxy Coating Materials; G-RE

Non-metallic Abrasive; G-RE

Metallic Abrasive; G-RE

SD-08 Manufacturer's Instructions

Coating System Instructions; G-RE

SD-11 Closeout Submittals

Disposal of Used Abrasive; G-RE

Inspection Logbook; G-RE

1.4 QUALITY ASSURANCE

1.4.1 Design Data

1.4.1.1 Environmental Control System

Submit design details of the proposed environmental control system to include ventilation, humidity control, and temperature regulation. Provide calculations for humidity control during separate surface preparation and coating application procedures, ventilation requirements during coating application, and maximum allowable coating application rates to coincide with ventilation. Include basis of design data on local conditions. Provide equipment layout sketches and procedures showing function of each piece of equipment and fail-safe measures. A Certified Industrial Hygienist shall approve calculations, work procedures and personal protective equipment.

1.4.2 Test Reports

1.4.2.1 Recycled Metallic Abrasive Field Test Reports (Daily and Weekly)

Submit test results from independent laboratory of daily and weekly Quality Control testing required by SSPC AB 2.

1.4.3 Certificates

1.4.3.1 Work Plan

Submit a written plan describing in detail all phases of the coating operations. Address work sequencing, surface preparation, coating application, recoat and cure time projections, as well as how each step will be controlled, tested, and evaluated. Describe process of determining the existing surface profile under paint, and procedures for ensuring that the profile is not increased beyond the maximum profile specified herein. Describe equipment and methods used to measure tank temperatures and humidity. Provide detailed procedures, including manufacturer's instructions, for repairing defects in the coating film such as runs, drips, sags, holidays, overspray, etc. Address safety measures, work scheduling based on expected weather condition extremes, and record keeping.

1.4.3.2 Qualifications of Certified Industrial Hygienist (CIH)

Submit name, address, telephone number, FAX number, and e-mail address of the independent third party CIH. Submit documentation that hygienist is certified by the American Board of Industrial Hygiene in comprehensive practice, including certification number and date of certification/recertification. Provide evidence of experience with hazards involved in industrial coating application work.

1.4.3.3 Qualifications of Testing Laboratory for Coatings

Submit name, address, telephone number, FAX number, and e-mail address of the independent third party laboratory selected to perform testing of coating samples for compliance with specification requirements. Submit documentation that laboratory is regularly engaged in testing of paint samples for conformance with specifications, and that employees performing testing are qualified.

1.4.3.4 Qualifications of Testing Laboratory for Abrasive

Submit name, address, telephone number, FAX number, and e-mail address of the independent third party laboratory selected to perform testing of abrasive for compliance with specification requirements. Submit documentation that laboratory has experience in testing samples of abrasive for conformance with specifications, and that employees performing testing are qualified.

1.4.3.5 Qualifications of Coating Contractors

Submit the name, address, telephone number, FAX number, and e-mail address of

the contractor that will be performing all surface preparation and coating application. Submit evidence that key personnel have successfully performed surface preparation and application of tank linings in welded petroleum storage tanks on a minimum of three separate projects within the past three years. List information by individual and include the following:

a. Name of individual and proposed position for this work.

b. Information about each previous assignment in a welded petroleum storage tank including:

Position or responsibility
Employer (if other than the Contractor)
Name of tank owner
Mailing address, telephone number, and telex number (if non-US) of tank owner
Name of individual in tank owner's organization who can be contacted as a reference
Location, size and description of tank
Dates work was carried out
Description of work carried out in tank

1.4.3.6 Qualifications of Coating Manufacturer's Representative

Evidence of experience and training of the Coating Manufacturer’s Representative(s) shall include literature documenting name, phone number and address, a statement from the coating manufacturer certifying that the representative has successfully completed all of the manufacturer’s training for material storage, mixing, application, and testing, and has been directly involved in evaluation and application of industrial coatings on a minimum of 10 steel structures within the last 5 years, and is not an employee of the Contractor. The manufacturer's representative shall advise on surface preparation, inspections, surface repair materials and methods, material handling, batching and mixing, application, curing, and testing.

1.4.3.7 Epoxy Coating Materials

Provide manufacturer's certification of conformance to contract requirements and provide copies of test results.

1.4.3.8 Non-metallic Abrasive

Provide manufacturer's certification of conformance to contract requirements and provide copies of test results.

1.4.3.9 Metallic Abrasive

Provide manufacturer's certification of conformance to contract requirements and provide copies of test results.

1.4.4 Product Data

1.4.4.1 Coating System Instructions

Submit manufacturer's printed instructions including detailed mixing and application procedures, number and types of coats required, minimum and maximum application temperatures, and curing procedures. Include Materials Safety Data Sheets (MSDS) for materials to be used at the job site in accordance with 29 CFR 1926.59.

1.5 DELIVERY AND STORAGE

Ship, store, and handle materials in accordance with SSPC PA 1, and as modified

in this Section. Maintain temperature in storage spaces between 40 and 75 degrees F, and air temperature more than 5 degrees F above the dew-point at all times. Inspect materials for damage prior to use and return non-compliant materials to manufacturer. Remove materials with expired shelf life from government property immediately and notify the Contracting Officer. Expired materials may be returned to manufacturer, tested, and if compliant, issued a shelf life extension.

1.6 COATING HAZARDS

Ensure that employees are trained in all aspects of the safety plan. Specified coatings may have potential health hazards if ingested or improperly handled. The coating manufacturer's written safety precautions shall be followed throughout mixing, application, and curing of the coatings. During tank cleaning, cleanup, surface preparation, and paint application phases, ensure that employees are protected from toxic and hazardous chemical agents which exceed concentrations in 29 CFR 1910.1000. Comply with respiratory protection requirements in 29 CFR 1910.134. The CIH shall approve work procedures and personal protective equipment.

1.7 WORK SEQUENCE

Coat tank interior following tank tightness testing.

1.8 JOB SITE REFERENCES

Make available to the Contracting Officer at least one copy each of API 653, ASTM D3276, ASTM D3925, ASTM D4285, ASTM D4417, NACE RP0178 and companion visual comparator, NACE RP0188, SSPC SP COM, SSPC SP 1, SSPC SP 7, SSPC SP 5, SSPC PA 1, SSPC PA 2, SSPC Guide 12, SSPC Guide to VIS 1, SSPC VIS 1, and an SSPC Certified Contractor Evaluation Form at the job site.

1.9 PRE-APPLICATION MEETING

After approval of submittals but prior to the initiation of coating work, Contractor representatives, including at a minimum, project superintendent and QC manager, paint foreman, Contracting Officer representatives, coating inspector, and coating systems manufacturer's representative shall have a pre-application coating preparatory meeting. This meeting shall be in addition to the pre-construction conference. Specific items addressed shall include: work plan, safety plan, inspection standards, inspector qualifications and tools, test procedures, environmental control system, safety plan, and test logs. Notify Contracting Officer at least ten days prior to meeting.

PART 2 PRODUCTS

2.1 COATING SYSTEM

Alternate systems or products will not be considered. All primer, intermediate, and topcoat materials shall be manufactured by one manufacturer. The entire coating system is intended to be applied in the field. Alternatively, surface preparation may be accomplished in the shop, following all temperature, humidity, and testing requirements listed herein, followed by an application of a hold-primer. Upon completion of field fabrication, all shop-applied coatings shall be removed, surfaces prepared to SSPC SP 5, and the specified coating system applied. Adjust all shop preparation to avoid conflicts with final surface preparation requirements.

2.1.1 Epoxy Primer, Intermediate, and Topcoats

2.1.1.1 Epoxy Primer Coat

Epoxy polyamide, MIL-DTL-24441/29 (Formula 150, Type IV, Green).

2.1.1.2 Epoxy Intermediate Coat

Epoxy polyamide, MIL-DTL-24441/31 (Formula 152, Type IV, White (Tinted)). Tint to approximately FED-STD-595 color number 27778 parchment using pigment dispersions prepared for epoxy paint tinting. Manufacturer shall tint material and appropriately label. All other requirements of this Military Specification apply.

2.1.1.3 Epoxy Topcoat

Epoxy polyamide, MIL-DTL-24441/31 (Formula 152, Type IV, White).

2.2 COATING SAMPLE COLLECTION AND SHIPPING KIT

Provide a kit that contains one quart can for the base of each coating material, an appropriately sized can for each activator, dipping cups for each component to be sampled, a shipping box sized for the samples to to be shipped, and packing material. Mark cans for the appropriate component. Provide shipping documents, including either pre-paid shipping or a shipper number that can be used by the Contracting Officer to arrange pickup, addressed to the approved coating testing laboratory.

2.3 ABRASIVE SAMPLE COLLECTION AND SHIPPING KIT

Provide a kit that contains one suitable plastic bag or container for each sample to be collected. Mark containers for the appropriate component. Provide shipping documents, including either pre-paid shipping or a shipper number that can be used by the Contracting Officer to arrange pickup, addressed to the approved coating testing laboratory.

2.4 SOLUBLE SALTS TEST KITS

2.4.1 Test Kit for Measuring Chlorides on Steel Surfaces

Provide test kits called CHLOR*TEST, as manufactured by CHLOR*RID International Inc. of Chandler, Arizona (www.chlor-rid.com) or equal. An "equal" test kit shall meet the following requirements:

a. Kit contains all materials,supplies, tools and instructions for field testing and on-site quantitative evaluation;

b. Kit extract solution is acidic, factory pre-measured, pre-packaged, and of uniform concentration;

c. Kit components and solutions are mercury free and environmentally friendly;

d. Kit contains a factory sealed titration device;

e. Kit contains new materials and solutions for each test;

f. Test container (vessel, sleeve, cell. etc.) creates a sealed, encapsulated environment during chloride ion extraction;

g. Test container is suitable for testing the following steel surfaces: horizontal (up/down configuration), vertical, flat, curved, smooth, pitted, and rough;

h. Kit uses test container, with resulting chloride ion extract solution, as the titration container;

i. Chloride ion concentration is directly measured in micrograms per square centimeter without using either conversion charts or tables.

2.5 ABRASIVE

The referenced abrasive specifications have maximum limits for soluble salts contamination, however, this maximum level of contamination does not guarantee that contamination will not be transferred to the steel surface during abrasive blasting. Other factors such as on-site handling and recycling can allow contamination of abrasive. Contractors are cautioned to verify that the chosen abrasive, along with work and storage processes, allow the final surface cleanliness requirements to be achieved. Successful testing of chlorides in abrasive does not negate the final acceptance testing of steel surfaces.

Interpret MIL-A-22262 to include the meaning that abrasive material contains a maximum one percent by weight of any toxic substance listed in either Table Z-1, Z-2, or Z-3 or 29 CFR 1910-SUBPART Z, with the exception of inert or nuisance dust materials, arsenic, beryllium, cadmium, cobalt, lead, mercury, rhodium, silver, tellurium, thallium, and uranium.

2.5.1 Non-metallic Abrasive

Conform to MIL-A-22262, Type I (Inorganic materials) except that the gross gamma radioactivity shall not exceed 5 picocuries per gram. Use sampling procedures and testing frequencies as prescribed in MIL-A-22262. Use abrasive that is specifically selected and graded to provide a sharp, angular profile to the specified depth. Do not use ungraded abrasive. Make adjustments to processes or abrasive gradation to achieve specified surface profile. Recycled non-metallic abrasive shall meet all requirements of the specification each time that it is placed in the blast pot.

2.5.2 Metallic Abrasive

2.5.2.1 New and Remanufactured Steel Grit

Conform to the chemical and physical properties of SSPC AB 3 except that the gross gamma radioactivity shall not exceed 5 picocuries per gram.

2.5.2.2 Recycled Steel Grit

Conform to the chemical and physical properties of SSPC AB 2

PART 3 EXECUTION

3.1 COATING AND ABRASIVE SAMPLE COLLECTION AND TESTING

3.1.1 Coating Sample Collection

Notify Contracting Officer three days in advance of sampling. The Contracting Officer and either the QC Manager shall witness all sampling. Provide a sample collection kit as required in Article entitled "Coating Sample Collection and Shipping Kit." Obtain a one quart sample of each batch of each base material, and proportional samples of each activator based on mix ratio, by random selection from sealed containers in accordance with ASTM D3925. Prior to sampling, mix contents of each sealed container to ensure uniformity. A batch is defined as that quantity of material processed by the manufacturer at one time and identified by number on the label. Identify samples by designated name, specification number, batch number, project contract number, sample date, intended use, and quantity involved. The Contracting Officer will take possession of the packaged samples, contact the shipping company to arrange for pickup, and relinquish the samples only to the shipping representative for shipment to the approved laboratory for testing as required by the paragraph entitled "Coating Sample Testing."

3.1.2 Abrasive Sample Collection

Notify Contracting Officer three days in advance of sampling. The Contracting Officer and either the QC Manager shall witness all sampling. Provide suitably sized containers for each sample to be taken. Provide a sample collection kit as required in Article entitled "Abrasive Sample Collection and Shipping Kit." For purposes of quality conformance inspection, a lot shall consist of all abrasive materials of the same type from a single, uniform batch produced and offered for delivery at one time. Obtain samples of each abrasive lot using the sampling techniques and schedule of MIL-A-22262. The addition of any substance to a batch shall constitute a new lot. Identify samples by designated name, specification number, lot number, project contract number, sample date, intended use, and quantity involved. The Contracting Officer will take possession of the packaged samples, contact the shipping company to arrange for pickup, and relinquish the samples only to the shipping representative for shipment to the approved laboratory for testing as required by the Article entitled "Abrasive Sample Testing."

3.1.3 Coating Sample Test Reports

Test samples of all primer, intermediate, and topcoat materials for compliance with requirements of Table I. Reject entire batch represented by samples that fail one or more tests, reselect, and retest samples.

3.1.4 Abrasive Sample Test Reports

Test samples of abrasive materials for compliance with the appropriate abrasive specification. Reject entire lot represented by samples that fail one or more tests, reselect, and retest samples.

3.2 LIGHTING

Provide lighting for all work areas as prescribed in SSPC Guide 12.

3.3 ENVIRONMENTAL CONDITIONS

3.3.1 Control System Requirements

Provide and utilize dehumidification and ventilation equipment to control humidity, temperature, and vapor levels in tank from beginning of abrasive blasting through coating application and for four days after the last coating is applied. System shall maintain vapor concentrations at or below 10 percent of Lower Explosive Limit (LEL). System may incorporate any combination of solid desiccant and direct expansion refrigeration equipment. No liquid, granular, calcium chloride, or lithium chloride drying systems will be accepted. Use only electric, indirect fired combustion, indirect friction, or steam coil auxiliary heaters. System shall be compatible with removal of dust and solvent vapors, and shall have fail-safe measures to ensure reliability during operations.

3.3.1.1 Humidity Control for Surface Preparation and Primer Application

Provide and utilize dehumidification equipment to maintain relative humidity at appropriate level to prevent prepared steel surfaces from corroding at all times during abrasive blasting through primer application. Failure of humidity control system, or failure to maintain proper conditions, during surface preparation stage may allow surface rusting, which will be rejected and require rework. All surfaces to be coated must meet all requirements of SSPC SP 5 at time of primer application. Failure of humidity control system during primer application stage will be cause for removal and replacement of all materials applied and cured while conditions were not as prescribed above.

3.3.1.2 Humidity Control for Application of Intermediate and Topcoats and Initial Curing

Provide and utilize dehumidification equipment to maintain relative humidity near the coldest steel surface in tank below 55 percent at all times during coating application, and during the first four days of initial curing after application of topcoat. This measurement is not the same as measuring the relative humidity of ambient air in the tank, and will require either electronic equipment to monitor relative humidity at the steel surface, or complex calculations to convert relative humidity of air in tank to relative humidity at steel surface. An approved alternative method of monitoring dehumidification that requires less sophisticated equipment or calculations is to maintain a minimum dew point depression of 18 degrees F below coldest steel surface temperature. This is in lieu of specific relative humidity and dew point requirements in this Section. Failure to maintain specified humidity control during this phase will be cause for extension of humidity controlled cure time to ensure four consecutive days at specified relative humidity at steel surfaces. Formation of condensation in coating application stage prior to the indicated dry-hard time will be cause for removal and replacement of all materials contacted by condensation.

3.4 EQUIPMENT USED IN TANK

Equipment used in the tank after surface preparation begins shall not leave any oily residue from exhaust or other sources. Internal combustion driven equipment, other than that powered by natural or bottled gas, shall not be used.

3.5 SURFACES TO BE COATED

Prepare and coat interior tank surfaces, including FLOOR, SHELL, CEILING, interior supports, fill pipes, ladders, hatches and manholes attached to the tank. Stainless Steel and Aluminum items shall not be coated.

3.6 SURFACE PREPARATION

3.6.1 Abrasive Blasting Equipment

Use abrasive blasting equipment of conventional air, force-feed, or pressure type. Maintain a minimum pressure of 95 psig at nozzle. Confirm that air supply for abrasive blasting is free of oil and moisture when tested in accordance with ASTM D4285. Test air quality at each startup, but in no case less often than every five operating hours.

3.6.2 Surface Standard

Inspect surfaces to be coated, and select plate with similar properties and surface characteristics for use as a surface standard. Blast clean one or more 1 foot square steel panels as specified in Article entitled "Surface Preparation." Record blast nozzle type and size, air pressure at nozzle and compressor, distance of nozzle from panel, and angle of blast to establish procedures for blast cleaning. Measure surface profile in accordance with ASTM D4417. When the surface standard complies with all specified requirements, seal with a clearcoat protectant. Use the surface standard for comparison to abrasive blasted surfaces throughout the course of work.

3.6.3 Pre-Preparation Testing for Surface Contamination

Perform testing, abrasive blasting, and testing in the prescribed order.

3.6.3.1 Pre-Preparation Testing for Oil and Grease Contamination

Inspect all surfaces for oil and/or grease contamination using two or more of the following inspection techniques: 1) Visual inspection, 2) WATER BREAK TEST,

3) BLACK LIGHT TEST, and 4) CLOTH RUB TEST. Reject oil and/or grease contaminated surfaces, clean using a water based pH neutral degreaser in accordance with SSPC SP 1, and recheck for contamination until surfaces are free of oil and grease.

WATER BREAK TEST - Spray atomized mist of distilled water onto surface, and observe for water beading. If water "wets" surface rather than beading up, surface can be considered free of oil or grease contamination. Beading of water (water forms droplets) is evidence of oil or grease contamination.

BLACK LIGHT TEST - Inspect surfaces for oil and grease contamination using the light specified in the Article entitled "Black Light." Use light no more than 15 inches from surface unless testing indicates that the specific oil or grease found in tank fluoresce at a greater distance. Use light in tank that is completely sealed from light infiltration, under a hood, or at night. Any fluorescing on steel surfaces is indication of petroleum oil/grease contamination. Use either WATER BREAK TEST or CLOTH RUB TEST to confirm both contaminated and non-contaminated areas detected by BLACK LIGHT TEST. The BLACK LIGHT TEST may not be used during inspection of prepared surfaces for oil and grease contamination unless proven to fluoresce the oil and/or grease found in the specific tank and documented during testing prior to abrasive blasting. Generally, only petroleum oil/grease will fluoresce, however, some may not fluoresce sufficiently to be recognized and other methods, such as the WATER BREAK TEST or CLOTH RUB TEST, must be used to confirm findings of the BLACK LIGHT TEST.

CLOTH RUB TEST - Rub a clean, white, lint free, cotton cloth onto surface and observe for discoloration. To confirm oil or grease contamination in lightly stained areas, a non-staining solvent may be used to aid in oil or grease extraction. Any visible discoloration is evidence of oil or grease contamination.

3.6.3.2 Pre-Preparation Testing for Soluble Salts Contamination

Test surfaces for soluble salts, and wash as required, prior to abrasive blasting. Soluble salt testing is also required in Article entitled "Pre-Application Testing for Soluble Salts Contamination" as a final acceptance test of prepared surfaces after abrasive blasting, and successful completion of this phase does not negate that requirement. This phase is recommended since pre-preparation testing and washing are generally more advantageous than attempting to remove soluble salt contamination after abrasive blasting. Effective removal of soluble salts will require removal of any barrier to the steel surface, including rust. This procedure may necessitate combinations of wet abrasive blasting, high pressure water rinsing, and cleaning using a solution of water washing and soluble salts remover. The soluble salts remover shall be acidic, biodegradable, nontoxic, noncorrosive, and after application, will not interfere with primer adhesion. Delays between testing and preparation, or testing and coating application, may allow for the formation of new contamination. Use potable water, or potable water modified with soluble salt remover, for all washing or wet abrasive blasting. Test methods and equipment used in this phase are selected at the Contractor's discretion.

3.6.4 Abrasive Blasting

Abrasive blast steel surfaces to white metal in accordance with SSPC SP 5. Prepared surfaces shall conform to SSPC VIS 1 and SSPC Guide to VIS 1 and shall match the prepared test-panels. Provide a 2 to 3 mil surface profile. Reject profile greater than 3 mils, discontinue abrasive blasting, and modify processes and materials to provide the specified profile. Measure surface profile in accordance with ASTM D4417. Measure profile at rate of three tests for the first 1000 square feet plus one test for each additional 1000 square feet or part thereof. Provide two additional measurements for each non-compliant measurement. When surfaces are reblasted for any reason, retest profile as

specified. If Method C of ASTM D4417 is used to measure profile, attach test tapes to Daily Inspection Reports. Following abrasive blasting, remove dust and debris by vacuum cleaning.

3.6.5 Disposal of Used Abrasive

Dispose of used abrasive off Government property in accordance with Federal, State and Local mandated regulations.

3.6.6 Pre-Application Testing For Surface Contamination

3.6.6.1 Pre-Application Testing for Oil and Grease Contamination

Ensure tank surfaces are free of contamination as described in Article entitled "Pre-Preparation Testing for Oil and Grease Contamination."

3.6.6.2 Pre-Application Testing for Soluble Salts Contamination

Test surfaces for chloride contamination using the Test Kit described in article entitled "Test Kit for Measuring Chlorides on Steel Surfaces." Test all surfaces at rate of three tests for the first 1000 square feet plus one test for each additional 2000 square feet or part thereof. Perform 30% of tests on bare steel at welds, divided equally between horizontal and vertical welds. One or more readings greater than 3 micrograms per square centimeter of chlorides is evidence of chloride contamination. Reject contaminated surfaces, wash as discussed in article entitled "Pre-Preparation Testing for Soluble Salts Contamination," allow to dry, and re-test until all required tests show allowable results. Reblast tested areas using vacuum equipped blast equipment. Label all test tubes and retain for test verification.

3.6.6.3 Pre-Application Testing for Surface Cleanliness

Apply coatings to dust free surfaces. To test surfaces, apply strip of clear adhesive tape to surface and rub onto surface with finger. When removed, the tape should show little or no dust, blast abrasive, or other contaminant. Reject contaminated surfaces, clean by vacuum cleaning, and retest. Test surfaces at rate of three tests for the first 1000 square feet plus one test for each additional 1000 square feet or part thereof. Provide two additional tests for each failed test or questionable test. Attach test tapes to Daily Inspection Reports.

3.7 MIXING AND APPLICATION OF SEALANT AND COATING SYSTEM

3.7.1 Preparation of Coating Materials for Application

Each of the different products, sealant, primer, intermediate, and topcoat, is a two-component material supplied in separate containers.

3.7.1.1 Mixing

Mix in accordance with manufacturer's instructions, which may differ for each product. Do not mix partial kits, or alter mix ratios. Mix materials in same temperature and humidity conditions specified in article entitled "Delivery and Storage." Allow mixed material to stand for the required induction time based on its temperature.

3.7.1.2 Pot Life

Apply mixed products within stated pot life for each product. Stop applying when material becomes difficult to apply in a smooth, uniform wet film. Do not add solvent to extend pot life. Add all required solvent at time of mixing. Pot life is based on standard conditions at 70 degrees F and 50 percent relative humidity. For every 18 degrees F rise in temperature, pot life is

reduced by approximately half, and for every 18 degrees F drop, it is approximately doubled. Usable pot life depends on the temperature of the material at the time of mixing and the sustained temperature at the time of application. Other factors such as the shape of the container and volume of mixed material may also affect pot life. In hot climates, precooling or exterior icing of components for at least 24 hours to a minimum of 50 degrees F will extend pot life. Following are approximate pot life times:

Sealant	As specified by manufacturer
Epoxy Primer and Intermediate Coat Materials	4 hours

3.7.1.3 Application Conditions and Recoat Windows

The application condition requirements for the coating system are very time and temperature sensitive, and are intended to avoid the delamination problems frequently found on industrial structures. Plan coating application to ensure that specified temperature, humidity, and condensation conditions are met. If conditions do not allow for orderly application of primer, stripe coat, intermediate coat and topcoat, use appropriate means of controlling air and surface temperatures, as required. Partial or total enclosures may be required, as well as other measures, to control conditions to allow for orderly application of all required coats.

Apply coating only when steel and internal air temperatures are between 60 and 100 degrees F. Do not apply coatings above 100 degrees F or below 60 degrees F.

Use Table entitled "RECOAT WINDOWS" to determine appropriate recoat windows for each coat after the initial coat. Apply each coating during appropriate RECOAT WINDOW.

If coating is not applied during RECOAT WINDOW, apply during EXTENDED RECOAT WINDOW. Application of any epoxy coat within the EXTENDED RECOAT WINDOW requires application of a TACK COAT prior to applying any full coat. Perform CURE TEST immediately prior to application of TACK COAT to determine condition of applied coating. If CURE TEST indicates that surface is fully cured, provide GLOSS REMOVAL prior to application of TACK COAT.

If coating is not applied during EXTENDED RECOAT WINDOW, or if surface temperature exceeds 120 degrees F between applications, provide GLOSS REMOVAL, apply TACK COAT, where applicable, within 24 hours, and apply next full coat within TACK COAT RECOAT WINDOW.

RECOAT WINDOWS

Temperature degrees F	60-70	71-80	81-90	91-100	101-110	111-120
RECOAT WINDOW (Hrs.)	24-72	18-60	16-48	12-36	8-18	4-6
EXTENDED RECOAT WINDOW (Hrs.)	72-168	60-140	48-120	36-96	18-36	6-12
TACK COAT RECOAT WINDOW (Hrs.)	6-72	4-60	4-48	3-36	2-18	1-6

The temperature ranges shown in the table above are for determining recoat windows. Choose recoat window based on the highest surface temperature that was sustained for one or more hours between coats. This applies to the entire time between coats. Measure and record air and surface temperatures on hourly basis to determine appropriate recoat windows. If surface temperature goes above 100 degrees F, measure and record temperatures every half hour.

CURE TEST - Where indicated, test surface for cure using high-flash aromatic Naphtha only (cas #64742-95-6). Do not use aliphatic VMP Naphtha. Wipe surface with rag saturated with Naphtha, and check for surface tackiness, loss of gloss, or other indications that solvent has softened surface. If softening

is found on 95% of test sites, this is indication that coating has not fully cured, and GLOSS REMOVAL is not required if TACK COAT is applied within three hours and full coat is applied within the TACK COAT RECOAT WINDOW. Test surfaces at rate of three tests for the first 1000 square feet plus one test for each additional 1000 square feet or part thereof.

TACK COAT - Where indicated, apply coat of intermediate coat epoxy, at 1 to 2 mils WFT, then apply next specified full coat within TACK COAT RECOAT WINDOW. Thin TACK COAT material approximately 25% by volume, using appropriate epoxy thinner.

GLOSS REMOVAL - Where indicated, remove all gloss by hand sanding, in a linear fashion, with 150-200 grit wet/dry sandpaper, followed by a solvent wiping with a clean rag soaked with denatured alcohol to remove dust. Do not use rotary sanders or grinders.

3.7.2 Application of Coating System

Apply coatings in accordance with SSPC PA 1 and as specified herein. Apply coatings to surfaces that meet all stated surface preparation requirements.

After application of primer coat and prior to application of each subsequent coat, perform testing prescribed in article entitled "Pre-Application Testing For Surface Contamination," as necessary, to ensure minimal intercoat contamination. This testing may be reduced to one half of the prescribed rate for bare steel if the testing indicates no contamination when sampling is evenly distributed over surfaces being tested. If contamination is found between coats, revert to the specified testing rate. Generally, oil and grease contamination and soluble salts contamination are not encountered if subsequent coats are applied within specified recoat windows and the quality of air entering tank is controlled. Concern for intercoat contamination should be continually prevalent, and spot testing should be accomplished to verify satisfactory conditions. Where visual examination or spot testing indicates contamination, perform sufficient testing to verify non-contamination, or to define extent of contamination for appropriate treatment.

Apply each coat in a consistent wet film, at 90 degrees to previous coat. Ensure that primer and intermediate coat "cold joints" are no less than six inches from welds. Apply stripe coat by brush. Apply all other coats by spray application. Use appropriate controls to prevent airborne coating fog from drifting beyond 15 feet from the tank perimeter. The cleanliness, temperature, recoat windows, and airborne paint containment requirements may necessitate the use of portable shelters or other appropriate controls.

Apply coatings at the following specified thickness:

Coat	Desired Thickness Range Mils DFT	Minimum Mils DFT	Maximum Mils DFT
Primer	3 - 5	3	8
Intermediate	3 - 5	3	8
Top	3 - 5	3	8
Total system	-----	9	20

Measure coating thickness in accordance with SSPC PA 2 to confirm that coating application is within the specified range and within the tolerances of that standard. For non-compliant areas, increase number of test areas to identify all non-compliant application as required by SSPC PA 2. Add coating as required to correct underuns, and remove coating with excess thickness to bare steel and reapply as specified in Article entitled "Procedure for Holiday and Spot Repairs of Newly Applied Coating."

3.7.2.1 Application of Stripe Coat

Apply stripe coat of epoxy primer material prior to application of general primer coat on CEILING and SHELL. Apply stripe coat of epoxy intermediate coat material after application of general primer coat on FLOOR. Apply stripe coat by brush, working the material into corners, crevices, pitted areas, and welds, and onto outside corners and angles. Where roof-to-rafter joints exceed 0.5 inch gap a use appropriate application tools to provide "best effort" coating of all exposed steel surfaces in the gap. Mini-rollers or other tools may be required.

3.7.2.2 Application of Primer

Apply primer coat within RECOAT WINDOW of stripe coat.

3.7.2.3 Application of Intermediate Coat

Apply intermediate coat within RECOAT WINDOW of primer coat.

3.7.2.4 Application of Topcoat

Apply topcoat within RECOAT WINDOW of intermediate coat.

3.7.3 Holiday Testing

No sooner than 48 hours after application of the topcoat, perform holiday testing in accordance with the low voltage wet sponge method of NACE RP0188. Repair holidays per paragraph entitled "Procedure for Holiday and Spot Repairs of Newly Applied Coating." .

3.7.4 Procedure for Holiday and Spot Repairs of Newly Applied Coating

Repair coating film defects at the earliest practicable time, preferably before application of the succeeding coat. Observe all requirements for soluble salts contamination, cleanliness between coats, and application conditions. Prepare defective area in accordance with SSPC SP 5, and feather coating as required to leave 4 inches of each succeeding coat feathered and abraded. Do not abrade the polyurethane topcoat. Protect adjacent areas from damage and overspray. Remove dust and solvent wipe the prepared area plus an additional 4 inches beyond the prepared area with clean denatured alcohol. Apply each coat within RECOAT WINDOW of preceeding coat. Within four hours of preparation, apply primer to prepared steel and feather onto prepared primer. Apply intermediate coat to primed area and feather to prepared intermediate area. Apply topcoat to intermediate coat and feather to prepared topcoat. Apply each repair coat to approximate thickness of surrounding coating system. If one percent or more of the total surface area, or more than one spot per 2000 square feet, of the FLOOR area requires repair to any coat or coats, including feathered areas, the entire FLOOR coating system shall be removed and reapplied. If 5 percent or more of the total surface area, or more than one spot per 1000 square feet, of the CEILING area requires repair to any coat or coats, including feathered areas, the entire CEILING coating system shall be removed and reapplied. Repairs on the SHELL are not limited.

3.7.5 Tank Occupancy After Coating Application

Use clean canvas, or other approved, shoe covers when walking on coated surfaces, regardless of curing time allowed. For heavily trafficked areas, provide cushioned mats for additional protection.

3.7.6 Extended Cure of Coating System Prior to Immersion Service

Allow a cure time of at least 14 days after the final coating material has been applied before introducing water or fuel into tank.

3.8 FIELD TESTS AND INSPECTION

For marking of tank surfaces, use chalk for marking bare steel, and water based markers for marking coated surfaces, and remove marks prior to coating. Do not use any wax or grease based markers, or any other markers that leave a residue or stain.

3.8.1 Coating Inspector

The coating inspector shall be considered a QC Specialist, shall work for the QC Manager, and shall be qualified in accordance with Section 01451, "Contractor Quality Control." The Coating Inspector shall be present during all pre-preparation testing, surface preparation, coating application, initial cure of the coating system, and during all coating repair work. The Coating Inspector shall provide complete documentation of conditions and occurrences on the job site, and be aware of conditions and occurrences that are potentially detrimental to the coating system. The requirements for inspection listed in this Section are in addition to the QC inspection and reporting requirements outlined in Section 01451, "Contractor Quality Control." The Coating Inspector shall prepare a project reference sheet outlining all requirements, tests, test methods, and evaluation criteria, and hold regular meetings with contractor personnel, including nozzlemen and applicators, to review requirements and evaluation criteria for upcoming work in advance of the work.

3.8.2 Field Inspection

3.8.2.1 Inspection Requirements

Accomplish field inspection in accordance with ASTM D3276 and as required herein. Perform all appropriate tests and inspections, except that viscosity and weight per gallon measurements are not required. Provide all tools and instruments required to perform the required testing, as well as any tools or instruments that the inspector considers necessary to perform the required inspections and tests. Document each inspection and test, including required hold points and other required inspections and tests, as well as those inspections and tests deemed prudent from on-site evaluation, as follows:

a. Location or area;
b. Purpose (required or special);
c. Method;
d. Criteria for evaluation;
e. Results;
f. Determination of compliance;
g. List of required rework;
h. Observations.

Collect and record Environmental Conditions as described in ASTM D3276 on a 24 hour basis, as follows:

a. During surface preparation, every two hours or when changes occur;
b. During coating application and the first four days of initial cure, every hour, or when changes occur;
c. Overnight hours may be excluded if conditions are measured and recorded through 1800 hours and then prior to dawn the next day;
d. Note location, time, and temperature of the highest and lowest surface temperatures each day.
e. Use a non-contact thermometer to locate temperature extremes, then verify with contact thermometers.

Document all equipment used in inspections and testing, including manufacturer, model number, serial number, last calibration date and future calibration date, and results of on-site calibration performed.

3.8.2.2 Daily Inspection Reports

Submit one copy of daily inspection report completed each day when performing work under this Section, to the Contracting Officer. Use ASTM D3276 Appendix X1 Inspection Checklist to monitor daily activity and prepare Daily Inspection Report. Use of forms containing entry blocks for all required data is encouraged. The data may be in any format, but must be legible and presented so that it can be easily interpreted. Note all non-compliance issues, and all issues that were reported for rework in accordance with QC procedures of Section 01451, "Contractor Quality Control." Submit report within 24 hours of date recorded on the report.

3.8.2.3 Inspection Logbook

A continuous record of all activity related to this Section shall be maintained in an Inspection Logbook on a daily basis. The logbook shall be hard or spiral bound with consecutively numbered pages, and shall be used to record all information provided in the Daily Inspection Reports, as well as other pertinent observations and information. The Coating Inspector's Logbook that is sold by NACE is satisfactory. Submit the original Inspection Logbook to the Contracting Officer upon completion of the project and prior to final payment.

3.8.3 Inspection Equipment

All equipment shall be in good condition, operational within its design range, and calibrated as required by the specified standard for use of each device.

3.8.3.1 Black Light

Use a black light having a 365 nanometer intensity of 4,000 microwatts per square centimeter minimum at 15 inches. The Spectroline BIB-150P from Spectronics Corporation satisfies this requirement.

3.8.4 Hold Points for Quality Control Inspections

Provide appropriate QC inspections at the following hold-points:

Step	Action
Prior to preparation of tank(s) for cleaning and repair	Safety inspection
After cleaning of tank(s) and prior to abrasive blasting	1. Safety inspection, removal of dirt, trash, debris, and any hindrance to abrasive blasting.
	2. Surface inspection for oil, grease, soluble salts, and other contaminants
Initiation of abrasive blasting, and at each work stoppage	1. Confirm environmental conditions are suitable for abrasive blasting and for holding the blast.
	2. Surface inspection to insure all aspects of surface preparation are properly addressed, as specified in article entitled "Surface Preparation."
	3. Surface inspection to insure all aspects of surface preparation are properly addressed, as specified in article entitled "Surface

	Preparation." 4. Test compressor air for oil and water contamination
After abrasive blasting	Surface inspection to insure all aspects of surface preparation are properly addressed, as specified in article entitled "Surface Preparation."
Immediately prior to coating application - provide for each coating application evolution	1. Confirm environmental conditions are suitable for abrasive blasting and for holding the blast as specified in article entitled "Environmental Conditions" 2. Surface inspection to insure all aspects of surface preparation are properly addressed, as specified in article entitled "Surface Preparation." 3. Confirm that testing equipment for monitoring of hazardous conditions during coating application are working properly and are prepared for use as outlined in contractor's Confined Space Entry Plan.
During and after coating application.	Coating application inspection as specified in paragraphs entitled "Application of Coating System" and "Field Tests and Inspection".
After final cleanup	Clean-up inspection specified in the article entitled "Final Cleanup."

3.9 FINAL CLEANUP

Following completion of the work, remove debris, equipment, and materials from the site. Remove temporary connections to Government or Contractor furnished water and electrical services. Restore existing facilities in and around the work areas to their original condition.

TABLE I
COATING QUALITY CONFORMANCE INSPECTION REQUIREMENTS

Table Ia. - Epoxy Primer Coat MIL-DTL-24441/29 Formula 150 Type IV (Green)

Test	Component A		Component B		Mixed	
	Min.	Max.	Min.	Max.	Min.	Max.
Pigment content, percent	45.0	50.0	35.0	40.0	---	---
Volatiles, percent	29.0	35.0	15.0	20.0	---	---
Non-volatile vehicle, percent	17.5	23.5	43.0	48.0	---	---
Coarse particles, percent	---	0.3	---	0.3	---	---
Consistency, grams	300	410	470	600	---	---
Weight						
Kilograms/liter	1.33	1.39	1.33	1.39	---	---
Pounds/gallon	11.1	11.6	11.1	11.6	---	---
Set to touch, hours at 23degrees C, 73 degrees F	---	---	---	---	---	3
Dry-hard time, hours at 23 degrees C, 73 degrees F	---	---	---	---	---	6
Fineness of grind, Hegman	3	---	2	---	---	---
Flashpoint						
Degrees C	35.5	---	37.8	---	---	---
Degrees F	96	---	100	---	---	---
Titanium Dioxide, percent of pigment	18	---	---	---	---	---
Pot life, hours at 23degrees C, 73 degrees F	---	---	---	---	4	---
Sag resistance,						
Micrometers	---	---	---	---	300	---
Mils	---	---	---	---	12	---
Color of dry film to approximate color of standard color chip	---	---	---	---	Conform	
Contrast ratio at 75 micrometers, 3 mils DFT	---	---	---	---	0.98	---
VOC						
Grams/liter	---	---	---	---	---	340
Pounds/gallon	---	---	---	---	---	2.8

GENERAL NOTES:
Test methods as specified in MIL-DTL-24441.
Where "Conform" is indicated, refer to specific requirements of MIL-DTL-24441/29.

TABLE I
COATING QUALITY CONFORMANCE INSPECTION REQUIREMENTS

Table Ib. - Epoxy Intermediate Coat MIL-DTL-24441/31 Formula 152 Type IV (White (Tinted))

Test	Component A		Component B		Mixed	
	Min.	Max.	Min.	Max.	Min.	Max.
Pigment content, percent	44.0	49.0	33.0	38.0	---	---
Volatiles, percent	29.0	35.0	16.0	21.0	---	---
Non-volatile vehicle, percent	17.5	23.5	44.0	49.0	---	---
Coarse particles, percent	---	0.3	---	0.3	---	---
Consistency, grams	180	320	300	470	---	---
Weight						
Kilograms/liter	1.39	1.45	1.29	1.35	---	---
Pounds per gallon	11.6	12.1	10.8	11.3	---	---
Set to touch, hours at 23 degrees C, 73 degrees F	---	---	---	---	---	3
Dry-hard time, hours at 23 degrees C, 73 degrees F	---	---	---	---	---	8
Fineness of grind, Hegman	4	---	4	---	---	---
Flashpoint						
Degrees C	35.5	---	37.8	---	---	---
Degrees F	96	---	100	---	---	---
Titanium dioxide, percent of pigment	91	---	---	---	---	---
Pot life, hours at 23 degrees C, 73 degrees F	---	---	---	---	4	---
Sag resistance						
Micrometers	---	---	---	---	300	---
Mils	---	---	---	---	12	---
Color of dry film to approximate color of FED-STD 595 color 27778	---	---	---	---	Conform	
Contrast ratio, at 75 micrometers, 3 mils DFT	---	---	---	---	0.98	---
VOC						
Grams/liter	---	---	---	---	---	340
Pounds/gallon	---	---	---	---	---	2.8

GENERAL NOTES:
Test methods as specified in MIL-DTL-24441.
Where "Conform" is indicated, refer to specific requirements of MIL-DTL-24441/31.

TABLE I
COATING QUALITY CONFORMANCE INSPECTION REQUIREMENTS

Table Ic. - Epoxy Intermediate Coat MIL-DTL-24441/31 Formula 152 Type IV (White)

Test	Component A		Component B		Mixed	
	Min.	Max.	Min.	Max.	Min.	Max.
Pigment content, percent	44.0	49.0	33.0	38.0	---	---
Volatiles, percent	29.0	35.0	16.0	21.0	---	---
Non-volatile vehicle, percent	17.5	23.5	44.0	49.0	---	---
Coarse particles, percent	---	0.3	---	0.3	---	---
Consistency, grams	180	320	300	470	---	---
Weight						
Kilograms/liter	1.39	1.45	1.29	1.35	---	---
Pounds per gallon	11.6	12.1	10.8	11.3	---	---
Set to touch, hours at 23 degrees C, 73 degrees F	---	---	---	---	---	3
Dry-hard time, hours at 23 degrees C, 73 degrees F	---	---	---	---	---	8
Fineness of grind, Hegman	4	---	4	---	---	---
Flashpoint						
Degrees C	35.5	---	37.8	---	---	---
Degrees F	96	---	100	---	---	---
Titanium dioxide, percent of pigment	91	---	---	---	---	---
Pot life, hours at 23 degrees C, 73 degrees F	---	---	---	---	4	---
Sag resistance						
Micrometers	---	---	---	---	300	---
Mils	---	---	---	---	12	---
Color of dry film to approximate color of FED-STD 595 color 27778	---	---	---	---	Conform	
Contrast ratio, at 75 micrometers, 3 mils DFT	---	---	---	---	0.98	---
VOC						
Grams/liter	---	---	---	---	---	340
Pounds/gallon	---	---	---	---	---	2.8

GENERAL NOTES:
Test methods as specified in MIL-DTL-24441.
Where "Conform" is indicated, refer to specific requirements of MIL-DTL-24441/31.

-- End of Section --

SECTION TABLE OF CONTENTS

DIVISION 10 - SPECIALTIES

SECTION 10100A

VISUAL COMMUNICATIONS SPECIALTIES

11/00

PART 1 GENERAL

1.1 GENERAL REQUIREMENTS
1.2 SUBMITTALS
1.3 DELIVERY, STORAGE AND HANDLING
1.4 WARRANTY

PART 2 PRODUCTS

2.1 TACKBOARDS
2.1.1 Cork
2.2 CASE FOR BOARD UNIT
2.3 PROJECTION SCREEN

PART 3 EXECUTION

3.1 INSTALLATION
3.2 CLEANING

-- End of Section Table of Contents --

SECTION 10100A

VISUAL COMMUNICATIONS SPECIALTIES
11/00

PART 1 GENERAL

1.1 GENERAL REQUIREMENTS

The term visual display board when used herein includes presentation boards, marker boards, tackboards, board cases, display track system and horizontal sliding units. Visual display boards shall be from manufacturer's standard product line.

1.2 SUBMITTALS

Government approval is required for submittals with a "G" designation; submittals not having a "G" designation are for information only. When used, a designation following the "G" designation identifies the office that will review the submittal for the Government. The following shall be submitted in accordance with Section 01330 SUBMITTAL PROCEDURES:

SD-03 Product Data

Visual Display Boards;

Manufacturer's descriptive data and catalog cuts. Manufacturer's installation instructions, and cleaning and maintenance instructions.

SD-04 Samples

Materials; .

Section of core material showing the lamination of natural cork, woven fabric, non-woven fabric, and vinyl wall covering. Sample of hardwood and plastic laminate finish, and glass type. Samples shall be minimum 4 by 4 inches and show range of color.

1.3 DELIVERY, STORAGE AND HANDLING

Materials shall be delivered to the building site in the manufacturer's original unopened containers and shall be stored in a clean dry area with temperature maintained above 50 degrees F. Materials shall be stacked according to manufacturer's recommendations. Visual display boards shall be allowed to acclimate to the building temperature for 24 hours prior to installation.

1.4 WARRANTY

Manufacturer's standard performance guarantees or warranties that extend beyond a one year period shall be provided.

PART 2 PRODUCTS

2.1 TACKBOARDS

2.1.1 Cork

Tackboard shall consist of a minimum 1/4 inch thick natural cork laminated to

a minimum 1/4 inch thick hardboard, and shall have an oak frame. The size shall be as shown in the drawings.

2.2 CASE FOR BOARD UNIT

The case for the board unit shall be surface mounted and have hinged minimum 3/16 inch thick tempered glass doors that are lockable. Case shall be oak. Mitered corners shall be reinforced for rigidity. Doors shall be equipped with continuous piano hinges. Door glass shall be framed with the case material, and be reinforced at all corners. Door framing shall not depend upon the glass for rigidity. Multiple door cases shall have an elbow catch. Two keys shall be provided for each unit. The size shall be as shown on the drawings.

2.3 PROJECTION SCREEN

Ceiling mounted Recessed mount motorized projection screen shall have 120V motor that is lubricated for life, quick reversal type, has overload protector, integral gears, and preset accessible limit switches. Recessed mount projection screens shall have an operable closure door and access panel. Screen shall be flame retardant, mildew resistant, and glass beaded with black masking borders. Bottom of screen fabric shall be weighted with metal rod. Roller shall be a rigid metal at least 3 inches in diameter mounted on sound absorbing supports. Motor will be end mounted or motor-in-roller design. Screen shall have a 3 position control switch to stop or reverse screen at any point. The switch shall be installed in a flush electrical box with cover plate, location(s) as shown on the electrical drawings. All conduit and wiring from the control switch to the projection screen shall be furnished and installed by the Contractor. Ceiling recessed case shall be extruded aluminum. Screen shall be UL listed. The size shall be as shown in the drawings.

PART 3 EXECUTION

3.1 INSTALLATION

Installation and assembly shall be in accordance with manufacturer's printed instructions. Concealed fasteners shall be used. Visual display boards shall be attached to the walls with suitable devices to anchor each unit. The Contractor shall furnish and install trim items, accessories and miscellaneous items in total, including but not limited to hardware, grounds, clips, backing materials, adhesives, brackets, and anchorages incidental to or necessary for a sound, secure, complete and finished installation. Installation shall not be initiated until completion of room painting and finishing operations. Visual display boards shall be installed in locations and at mounting heights indicated. Visual display boards shall be installed level and plumb, and if applicable doors shall be aligned and hardware shall be adjusted. Damaged units shall be repaired or replaced by the Contractor as directed by the Contracting Officer.

3.2 CLEANING

Writing surfaces shall be cleaned in accordance with manufacturer's instructions.

-- End of Section --

SECTION TABLE OF CONTENTS

DIVISION 10 - SPECIALTIES

SECTION 10160A

TOILET PARTITIONS

07/98

PART 1 GENERAL

1.1 REFERENCES
1.2 SUBMITTALS
1.3 SYSTEM DESCRIPTION
1.4 DELIVERY, STORAGE, AND HANDLING
1.5 WARRANTY

PART 2 PRODUCTS

2.1 TOILET ENCLOSURES
2.2 URINAL SCREENS
2.3 HARDWARE
2.4 COLORS

PART 3 EXECUTION

3.1 INSTALLATION
3.2 ADJUSTING AND CLEANING

-- End of Section Table of Contents --

SECTION 10160A

TOILET PARTITIONS
07/98

PART 1 GENERAL

1.1 REFERENCES

The publications listed below form a part of this specification to the extent referenced. The publications are referred to in the text by basic designation only.

U.S. GENERAL SERVICES ADMINISTRATION (GSA)

CID A-A-60003 Partitions, Toilet, Complete

1.2 SUBMITTALS

Government approval is required for submittals with a "G" designation; submittals not having a "G" designation are for information only. When used, a designation following the "G" designation identifies the office that will review the submittal for the Government. The following shall be submitted in accordance with Section 01330 SUBMITTAL PROCEDURES:

SD-02 Shop Drawings

Approved Detail Drawings;

Drawings showing plans, elevations, details of construction, hardware, reinforcing, fittings, mountings, and anchorings.

SD-03 Product Data

Toilet Partition System;

Manufacturer's technical data and catalog cuts including installation and cleaning instructions.

SD-04 Samples

Toilet Partition System; G-AE

Three actual samples of each color specified, minimum 2" x 2".

1.3 SYSTEM DESCRIPTION

Toilet partition system, including toilet enclosures, room entrance screens, and urinal screens, shall be a complete and usable system of panels, hardware, and support components. The partition system shall be provided by a single manufacturer and shall be a standard product as shown in the most recent catalog data. The partition system shall be as shown on the approved detail drawings.

1.4 DELIVERY, STORAGE, AND HANDLING

Components shall be delivered to the jobsite in the manufacturer's original packaging with the brand, item identification, and project reference clearly marked. Components shall be stored in a dry location that is adequately ventilated; free from dust, water, or other contaminants; and shall have easy access for inspection and handling.

1.5 WARRANTY

Manufacturer's standard performance guarantees or warranties that extend beyond a 1 year period shall be provided.

PART 2 PRODUCTS

2.1 TOILET ENCLOSURES

Toilet enclosures shall conform to CID A-A-60003, Type I, Style A, floor supported. Width, length, and height of toilet enclosures shall be as shown. Finish surface of panels shall be painted metal, Finish 1 . Panels indicated to receive toilet paper holders or grab bars as specified in Section 10800A TOILET ACCESSORIES, shall be prepared for mounting of the items required. Grab bars shall withstand a bending stress, shear stress, shear force, and a tensile force induced by 250 lbf. Grab bars shall not rotate within their fittings.

2.2 URINAL SCREENS

Urinal screens shall conform to CID A-A-60003, Type III, Style A, floor supported. Finish surface of screens shall be painted metal, Finish 1. Width and height of urinal screens shall be as shown.

2.3 HARDWARE

Hardware for the toilet partition system shall conform to CID A-A-60003 for the specified type and style of partitions. Hardware finish shall be highly resistant to alkalies, urine, and other common toilet room acids.

2.4 COLORS

Color of finishes for toilet partition system components shall be as specified in Section 09915 COLOR SCHEDULE.

PART 3 EXECUTION

3.1 INSTALLATION

Toilet partitions shall be installed straight and plumb in accordance with approved manufacturer's instructions with horizontal lines level and rigidly anchored to the supporting construction. Where indicated, anchorage to walls shall be by through-bolting. Drilling and cutting for installation of anchors shall be at locations that will be concealed in the finished work.

3.2 ADJUSTING AND CLEANING

Doors shall have a uniform vertical edge clearance of approximately 3/16 inch and shall rest open at approximately 30 degrees when unlatched. Baked enamel finish shall be touched up with the same color of paint that was used for the finish. Toilet partitions shall be cleaned in accordance with

approved manufacturer's instructions and shall be protected from damage until accepted.

-- End of Section --

SECTION TABLE OF CONTENTS

DIVISION 10 - SPECIALTIES

SECTION 10440A

INTERIOR SIGNAGE

06/98

PART 1 GENERAL

1.1 REFERENCES
1.2 SUBMITTALS
1.3 GENERAL
1.3.1 Character Proportions and Heights
1.3.2 Raised and Brailled Characters and Pictorial Symbol Signs (Pictograms)
1.4 QUALIFICATIONS
1.5 DELIVERY AND STORAGE
1.6 EXTRA STOCK

PART 2 PRODUCTS

2.1 ROOM IDENTIFICATION/DIRECTIONAL SIGNAGE SYSTEM
2.1.1 Standard Room Signs
2.1.2 Changeable Message Strip Signs
2.1.3 Type of Mounting For Signs
2.1.4 Graphics
2.2 COLOR, FINISH, AND CONTRAST

PART 3 EXECUTION

3.1 INSTALLATION
3.1.1 Anchorage
3.1.2 Protection and Cleaning

-- End of Section Table of Contents --

SECTION 10440A

INTERIOR SIGNAGE
06/98

PART 1 GENERAL

Attachments (3): Sign Types

1.1 REFERENCES

The publications listed below form a part of this specification to the extent referenced. The publications are referred to in the text by basic designation only.

AMERICAN NATIONAL STANDARDS INSTITUTE (ANSI)

ANSI Z97.1	(1984; Rev 1994) Safety Performance Specifications and Methods of Test for Safety Glazing Materials Used in Buildings

1.2 SUBMITTALS

Government approval is required for submittals with a "G" designation; submittals not having a "G" designation are for information only. When used, a designation following the "G" designation identifies the office that will review the submittal for the Government. The following shall be submitted in accordance with Section 01330 SUBMITTAL PROCEDURES:

SD-02 Shop Drawings

Detail Drawings; G-AE

Drawings showing elevations of each type of sign, dimensions, details and methods of mounting or anchoring, shape and thickness of materials, and details of construction. A schedule showing the location, each sign type, and message shall be included.

SD-03 Product Data

Installation; G-AE

Manufacturer's descriptive data, catalogs cuts, installation and cleaning instructions.

SD-04 Samples

Interior Signage; G-AE

One sample of each sign type showing typical quality and workmanship. The samples may be installed in the work, provided each sample is identified and location recorded.

Three samples of each color required.

SD-10 Operation and Maintenance Data

Approved Manufacturer's Instructions
Protection and Cleaning

Six copies of operating instructions outlining the step-by-step procedures required for system operation shall be provided. The instructions shall include simplified diagrams for the system as installed. Six copies of maintenance instructions listing routine procedures, repairs, and guides shall be provided. The instructions shall include the manufacturer's name, model number, service manual, parts list, and brief description of all equipment and their basic operating features. Each set shall be permanently bound and shall have a hard cover. The following identification shall be inscribed on the covers: the words "OPERATING AND MAINTENANCE INSTRUCTIONS", name and location of the facility, name of the Contractor, and contract number.

1.3 GENERAL

Interior signage shall be of the design, detail, sizes, types, and message content shown on the drawings, shall conform to the requirements specified, and shall be provided at the locations indicated. Signs shall be complete with lettering, and related components for a complete installation.

1.3.1 Character Proportions and Heights

Letters and numbers on indicated signs in handicapped-accessible buildings, which do not designate permanent rooms or spaces, shall have a width-to-height ratio between 3:5 and 1:1 and a stroke-width-to-height ratio between 1:5 and 1:10. Characters and numbers on indicated signs shall be sized according to the viewing distance from which they are to be read. The minimum height is measured using an upper case letter "X". Lower case characters are permitted.

1.3.2 Raised and Brailled Characters and Pictorial Symbol Signs (Pictograms)

Letters and numbers on signs which designate permanent rooms and spaces in handicapped-accessible buildings shall be raised 1/32 inch upper case, sans serif or simple serif type and shall be accompanied with Grade 2 Braille. Raised characters shall be at least 5/8 inch in height, but no higher than 2 inches. Pictograms shall be accompanied by the equivalent verbal description placed directly below the pictogram. The border dimension of the pictogram shall be 6 inches minimum in height.

1.4 QUALIFICATIONS

Signs, plaques, and dimensional letters shall be the standard product of a manufacturer regularly engaged in the manufacture of such products and shall essentially duplicate signs that have been in satisfactory use at least 2 years prior to bid opening.

1.5 DELIVERY AND STORAGE

Materials shall be delivered to the jobsite in manufacturer's original packaging and stored in a clean, dry area in accordance with manufacturer's instructions.

1.6 EXTRA STOCK

The Contractor shall provide extra stock of the following: 10 sets pressure-sensitive letters in each color and size for Sign Type A and 10 changeable message strips.

PART 2 PRODUCTS

2.1 ROOM IDENTIFICATION/DIRECTIONAL SIGNAGE SYSTEM

Signs shall be fabricated of Type ES/MP laminated thermosetting plastic

suitable for engraving or acrylic plastic conforming to ANSI Z97.1.

2.1.1 Standard Room Signs

Signs shall consist of matte finish acrylic plastic or laminated thermosetting Type MP plastic. Units shall be frameless. Corners of signs shall be radius.

2.1.2 Changeable Message Strip Signs

Changeable message strip signs shall consist of polycarbonate, cast acrylic or laminated thermosetting Type MP plastic face with message slots and associated end caps, as detailed, for insertion of changeable message strips. Size of signs shall be as shown on the attachments. Individual message strips to permit removal, change, and reinsertion shall be provided as necessary. Corners of signs shall be radius.

2.1.3 Type of Mounting For Signs

Surface mounted signs shall be provided with 1/16 inch thick vinyl foam tape. Sign inserts shall be provided with 1/16 inch thick foam tape.

2.1.4 Graphics

Signage graphics for modular identification/directional signs shall conform to one of the following:

Pressure sensitive prespaced and prealigned precision computer cut vinyl letters on release paper shall be provided. Edges and corners of finished letter forms and graphics shall be true and clean. Vinyl sheeting for graphics shall be 5 to 7 year premium type and shall be a minimum 0.003 inch film thickness. Film shall include a precoated pressure sensitive adhesive backing.

Message shall be applied to panel using the silkscreen process. Silkscreened images shall be executed with photo screens prepared from original art. Handcut screens will not be accepted. Original art shall be defined as artwork that is a first generation reproduction of the specified art. Edges and corners shall be clean.

Acrylic letters 1/8 inch thick and chemically welded to 0.125 inch thick acrylic backup sheet.

2.2 COLOR, FINISH, AND CONTRAST

Color shall be in accordance with Section 09915 COLOR SCHEDULE . In buildings required to be handicapped-accessible, the characters and background of signs shall be eggshell, matte, or other non-glare finish. Characters and symbols shall contrast with their background - either light characters on a dark background or dark characters on a light background.

PART 3 EXECUTION

3.1 INSTALLATION

Signs shall be installed in accordance with approved manufacturer's instructions. Signs shall be installed plumb and true and conform to ADA requirements. Required blocking shall be installed as detailed. Signs which designate permanent rooms and spaces in handicapped-accessible buildings shall be installed on the wall adjacent to the latch side of the door. Where there is no wall space to the latch side of the door, including at double leaf doors, signs shall be placed on the nearest adjacent wall. Mounting location for such signage shall be so that a person may approach within 3 inches of signage without encountering protruding objects or standing within the swing of a door. Signs on doors or other surfaces shall not be installed until finishes on such

surfaces have been installed. Signs installed on glass surfaces shall be installed with matching blank back-up plates in accordance with manufacturer's instructions.

*The POL Signage Schedule is as follows (see attachments to this specification for sign types.) Verify copy with Contracting Officer.

SIGNAGE SCHEDULE:

Room Number	Sign Type	Copy
103	A	OFFICE
103A	A	OFFICE
104	A	OFFICER IN CHARGE
105	A	FUEL SUPERINTENDENT
106	A	TRAINING OFFICE
108	A	CONFERENCE/CLASSROOM
109	A	OPERATIONS SUPERINTENDENT
110	A	NCOIC
111	A	SHIFT OFFICE
116	A	QUALITY CONTROL INSPECTOR
117	A	LABORATORY
118	A	BREAK ROOM, Install on North Wall of Entrance
124	C	MEN
125	A	FCC
127	B	WOMEN

3.1.1 Anchorage

Anchorage shall be in accordance with approved manufacturer's instructions. Anchorage not otherwise specified or shown shall include slotted inserts, expansion shields, and powder-driven fasteners when approved for concrete; toggle bolts and through bolts for masonry; machine carriage bolts for steel; lag bolts and screws for wood. Exposed anchor and fastener materials shall be compatible with metal to which applied and shall have matching color and finish. Where recommended by signage manufacturer, foam tape pads may be used for anchorage. Foam tape pads shall be minimum 1/16 inch thick closed cell vinyl foam with adhesive backing. Adhesive shall be transparent, long aging, high tech formulation on two sides of the vinyl foam. Adhesive surfaces shall be protected with a 5 mil green flatstock treated with silicone. Foam pads shall be sized for the signage as per signage manufacturer's recommendations. Signs mounted to painted gypsum board surfaces shall be removable for painting maintenance.

3.1.2 Protection and Cleaning

The work shall be protected against damage during construction. Hardware and electrical equipment shall be adjusted for proper operation. Glass, frames, and other sign surfaces shall be cleaned in accordance with the manufacturer's approved instructions.

-- End of Section --

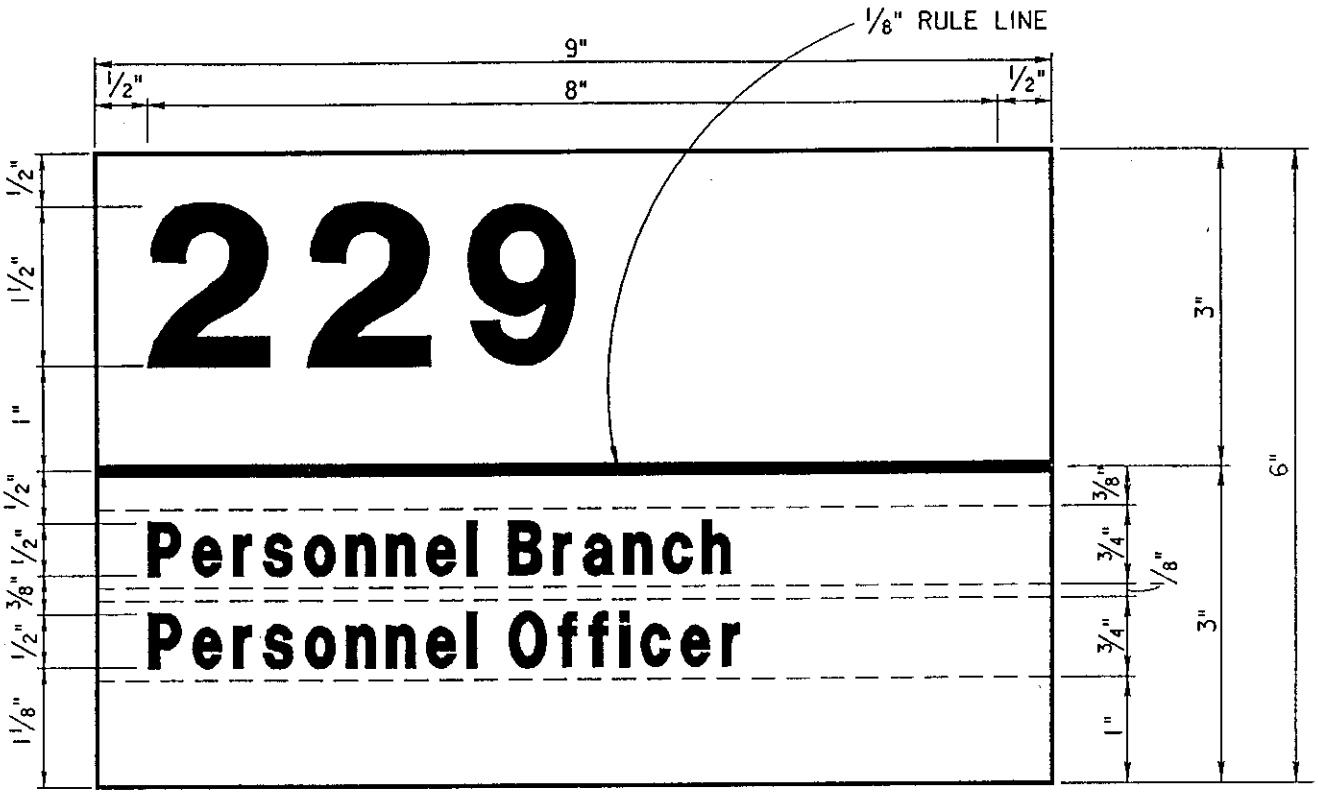

WHEN SIGN HAS ONE LINE OF 1/2" HIGH COPY, COPY SHALL BE JUSTIFIED LEFT AND CENTERED IN AREA CURRENTLY SHOWN WITH TWO LINES OF COPY.

NOT TO SCALE

NOTE: BRAILLE IS REQUIRED

SIGN TYPE A

AT-1

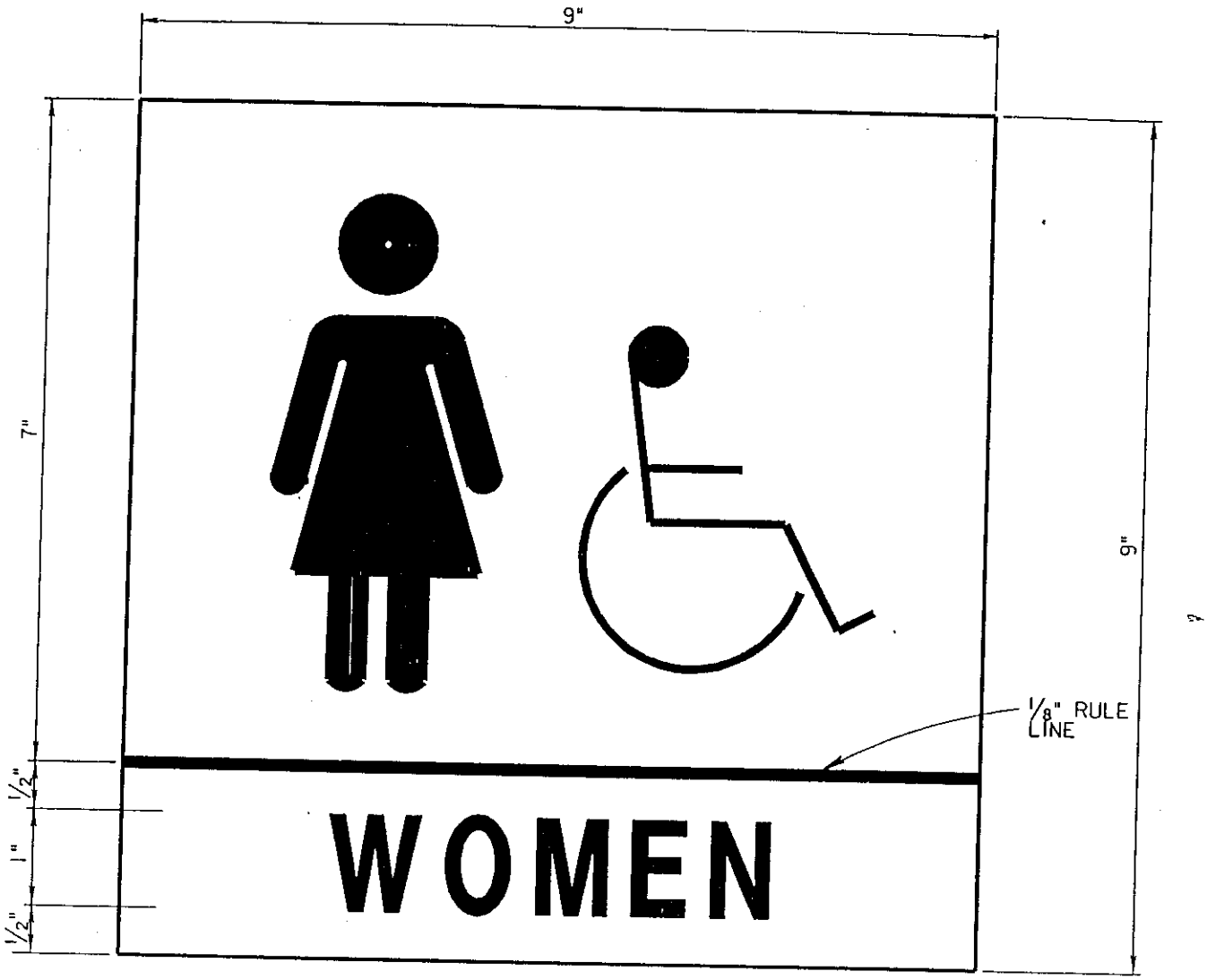

NOTE: BRAILLE IS REQUIRED

NOT TO SCALE

SIGN TYPE B

AT-2

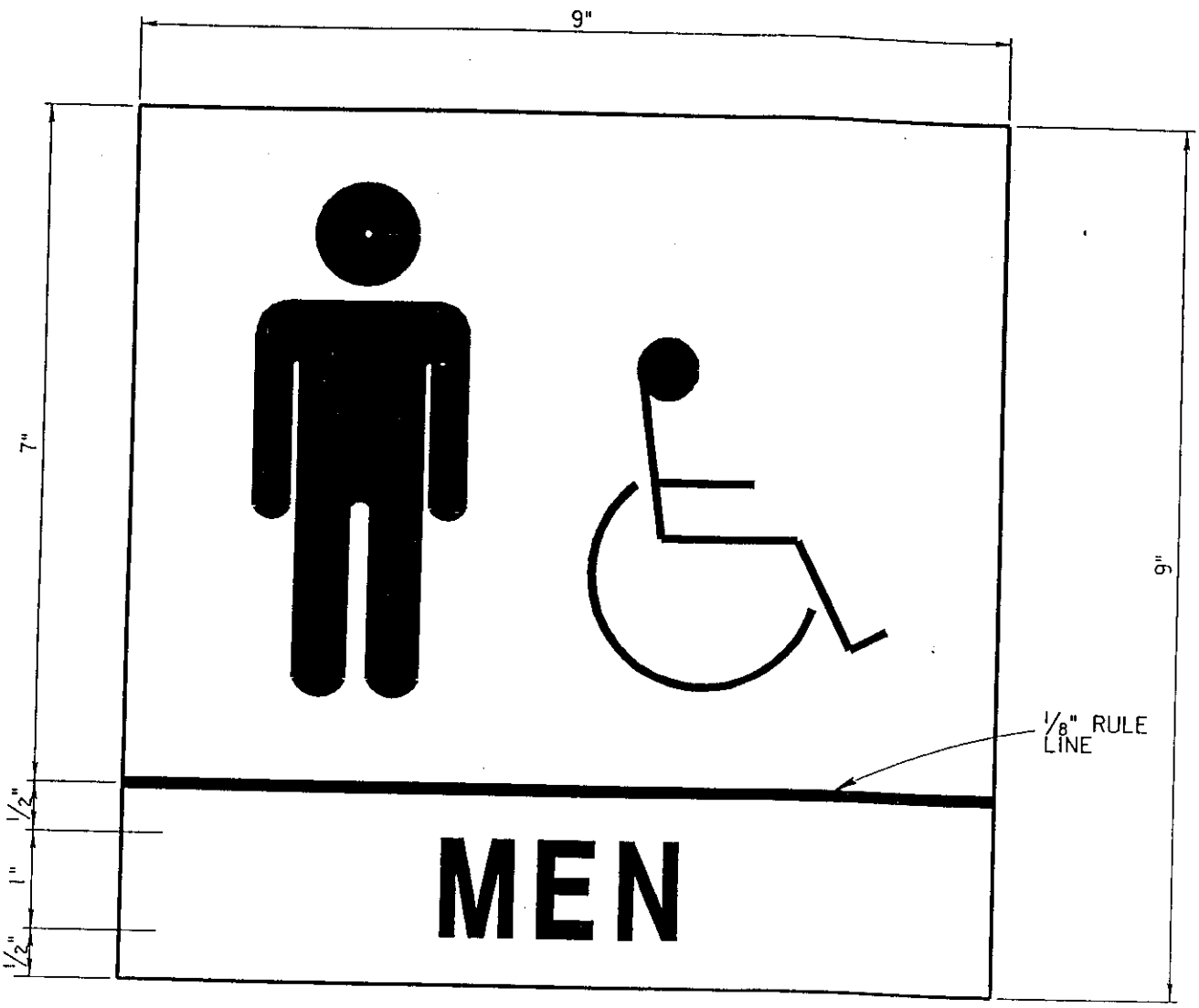

NOTE: BRAILLE IS REQUIRED

NOT TO SCALE

SIGN TYPE C

AT-3

SECTION TABLE OF CONTENTS

DIVISION 10 - SPECIALTIES

SECTION 10500

LOCKERS

03/00

PART 1 GENERAL

1.1 REFERENCES (NOT USED)
1.2 SUBMITTALS
1.3 PRODUCT DELIVERY, STORAGE AND HANDLING
1.4 JOB CONDITIONS

PART 2 PRODUCTS

2.1 SOLID LOCKERS
2.2 BENCHES

PART 3 EXECUTION

3.1 INSTALLATION
3.2 CLEAN-UP
3.3 QUALITY CONTROL

-- End of Section Table of Contents --

SECTION 10500

LOCKERS
03/00

PART 1 GENERAL

1.1 REFERENCES (NOT USED)

1.2 SUBMITTALS

Government approval is required for submittals with a "G" designation; submittals not having a "G" designation are for information only. When used, a designation following the "G" designation identifies the office that will review the submittal for the Government. The following shall be submitted in accordance with Section 01330 SUBMITTAL PROCEDURES:

SD-02 Shop Drawings

Shop Drawings; .

Submit shop drawings showing layout, elevations and details of all lockers. Indicate materials and thickness.

SD-03 Product Data

Manufacturer's Data;.

SD-04 Samples

Locker Color; G-AE.

Three actual samples (minimum 3"x5" in size) indicating finish and color as specified.

1.3 PRODUCT DELIVERY, STORAGE AND HANDLING

Deliver materials in manufacturer's original unopened containers. Provide blocking as required, store materials under cover and protect against damage.

1.4 JOB CONDITIONS

Coordinate installation of lockers with other trades.

PART 2 PRODUCTS

2.1 SOLID LOCKERS

Lockers for locker rooms shall be steel construction, double tier, similar to Penco Products Inc. Vanguard model. Size shall be nominal 1 foot x 1 foot. Overall height shall be a minimum 72 inches. Locker shall have three single prong coat hooks. Door frame members shall be a minimum 18 gauge, flanged on all four edges to provide strength and stiffness. Sides, backs, tops and bottoms shall be a minimum 24 gauge with edges suitably

formed to provide strength and rigidity. All trim pieces, filler panels, closed bases, and continuous sloped tops shall be a minimum 18 gauge. All above accessory items shall have concealed fasteners. Each locker shall have a polished aluminum number plate attached with rivets, with black etched numerals not less than 10 mm high. All non-plated parts shall receive one coat of high-grade enamel sprayed on by electrostatic method. Enamel shall be baked on at the proper temperature to insure through curing and tough, durable finish. Color shall be in accordance with Section 09915 Color Schedule.

2.2 BENCHES

Benches shall be made from selected hardwood finished with a clear lacquer. Size of benches shall be a minimum 10 inches wide x 1 1/2" thick x length as shown on drawings. Benches shall have heavy duty tubular steel pedestals finished to match lockers, securely fastened to the floor. Bench height shall be 440 mm.

PART 3 EXECUTION

3.1 INSTALLATION

Install lockers and benches in areas indicated. Install in accordance with approved shop drawings. Fasten lockers together and to concentrate walls and floors according to manufacturer's instructions.

3.2 CLEAN-UP

Upon completion of installation, clean all surfaces. Touch-up all scratches and marks with touch-up paint provided by locker manufacturer.

3.3 QUALITY CONTROL

a. The Contractor shall establish and maintain quality control for operations under this section to assure compliance with contract requirements and maintain records his quality control for all materials, equipment, and construction operations, including but not limited to the following:

a. Correct locker location and color.

b. Damage and defects.

b. A copy of these records and Contractor test, as well as the cords of correction action taken, shall be furnished by the Government as directed by the Contracting Officer.

-- End of Section --

SECTION TABLE OF CONTENTS

DIVISION 10 - SPECIALTIES

SECTION 10800A

TOILET ACCESSORIES

04/01

PART 1 GENERAL

1.1 REFERENCES
1.2 SUBMITTALS
1.3 DELIVERY, STORAGE, AND HANDLING
1.4 WARRANTY

PART 2 PRODUCTS

2.1 MANUFACTURED UNITS
2.1.1 Anchors and Fasteners
2.1.2 Finishes
2.2 ACCESSORY ITEMS
2.2.1 Grab Bar (GB)
2.2.2 Mirrors, Glass (MG)
2.2.3 Combination Paper Towel Dispenser/Waste Receptacle Units (PTDWR)
2.2.4 Sanitary Napkin Disposer (SND)
2.2.5 Shower Curtain (SC)
2.2.6 Shower Curtain Rods (SCR)
2.2.7 Soap Dispenser (SD)
2.2.8 Soap Holder (SH)
2.2.9 Towel Pin (TP)
2.2.10 Toilet Tissue Dispenser (TTD)
2.2.11 Electric Hand Dryer (EHD)
2.2.12 Mop Holder with Shelf Janitor Closet

PART 3 EXECUTION

3.1 INSTALLATION
3.2 CLEANING
3.3 SCHEDULE

-- End of Section Table of Contents --

SECTION 10800A

TOILET ACCESSORIES
04/01

PART 1 GENERAL

1.1 REFERENCES

The publications listed below form a part of this specification to the extent referenced. The publications are referred to in the text by basic designation only.

AMERICAN SOCIETY FOR TESTING AND MATERIALS (ASTM)

ASTM C 1036 (1991; R 1997) Flat Glass

U.S. GENERAL SERVICES ADMINISTRATION (GSA)

CID A-A-2398 (Rev BC); (Canc. Notice 1 Curtain, Shower and Window (Metric - SI)

1.2 SUBMITTALS

Government approval is required for submittals with a "G" designation; submittals not having a "G" designation are for information only. When used, a designation following the "G" designation identifies the office that will review the submittal for the Government. The following shall be submitted in accordance with Section 01330 SUBMITTAL PROCEDURES:

SD-03 Product Data

Finishes;
Accessory Items;

Manufacturer's descriptive data and catalog cuts indicating materials of construction, fasteners proposed for use for each type of wall construction, mounting instructions, operation instructions, and cleaning instructions.

SD-04 Samples

Finishes;
Accessory Items;

One sample of each accessory proposed for use. Approved samples may be incorporated into the finished work, provided they are identified and their locations noted.

SD-10 Operation and Maintenance Data

Electric Hand Dryer;

Four complete copies of maintenance instructions listing routine maintenance procedures and possible breakdowns and repairs. Instructions shall include simplified wiring and control diagrams and other information necessary for unit maintenance.

1.3 DELIVERY, STORAGE, AND HANDLING

Toilet accessories shall be wrapped for shipment and storage, delivered to the jobsite in manufacturer's original packaging, and stored in a clean, dry area protected from construction damage and vandalism.

1.4 WARRANTY

Manufacturer's standard performance guarantees or warranties that extend beyond a 1 year period shall be provided.

PART 2 PRODUCTS

2.1 MANUFACTURED UNITS

Toilet accessories shall be provided where indicated in accordance with paragraph SCHEDULE. Porcelain type, tile-wall accessories are specified in Section 09310A CERAMIC TILE. Each accessory item shall be complete with the necessary mounting plates and shall be of sturdy construction with corrosion resistant surface.

2.1.1 Anchors and Fasteners

Anchors and fasteners shall be capable of developing a restraining force commensurate with the strength of the accessory to be mounted and shall be suited for use with the supporting construction. Exposed fasteners shall be of tamperproof design and shall be finished to match the accessory.

2.1.2 Finishes

Except where noted otherwise, finishes on metal shall be provided as follows:

Metal	Finish
Stainless steel	No. 4 satin finish
Carbon steel, copper alloy, and brass	Chromium plated, bright

2.2 ACCESSORY ITEMS

Accessory items shall conform to the requirements specified below.

2.2.1 Grab Bar (GB)

Grab bar shall be 18 gauge, 1-1/4 inches OD Type 304 stainless steel. Grab bar shall be form and length as indicated. Concealed mounting flange shall have mounting holes concealed. Grab bar shall have satin finish peened non-slip surface. Installed bars shall be capable of withstanding a 500 pound vertical load without coming loose from the fastenings and without obvious permanent deformation. Space between wall and grab bar shall be 1-1/2 inch.

2.2.2 Mirrors, Glass (MG)

Glass for mirrors shall be Type I transparent flat type, Class 1-clear. Glazing Quality q1 1/4 inch thick conforming to ASTM C 1036. Glass shall be coated on one surface with silver coating, copper protective coating, and mirror backing paint. Silver coating shall be highly adhesive pure silver coating of a thickness which shall provide reflectivity of 83 percent or more of incident light when viewed through 1/4 inch thick glass, and shall be free of pinholes or other defects. Copper protective coating shall be pure bright reflective copper, homogeneous without sludge, pinholes or other defects, and shall be of proper thickness to prevent "adhesion pull" by mirror backing paint. Mirror

backing paint shall consist of two coats of special scratch and abrasion-resistant paint and shall be baked in uniform thickness to provide a protection for silver and copper coatings which will permit normal cutting and edge fabrication.

2.2.3 Combination Paper Towel Dispenser/Waste Receptacle Units (PTDWR)

Dispenser/receptacle shall be semi-recessed and shall have a capacity of 600 sheets of C-fold, single-fold, or quarter-fold towel. Waste receptacle shall be designed to be locked in unit and removable for service. Locking mechanism shall be tumbler key lock. Waste receptacle shall have a capacity of 18 gallons. Unit shall be fabricated of not less than 0.30 inch stainless steel welded construction with all exposed surfaces having a satin finish. Waste receptacle that accepts reusable liner standard for unit manufacturer shall be provided.

2.2.4 Sanitary Napkin Disposer (SND)

Sanitary napkin disposal shall be constructed of Type 304 stainless steel with removable leak-proof receptacle for disposable liners. Fifty disposable liners of the type standard with the manufacturer shall be provided. Receptacle shall be retained in cabinet by tumbler lock. Disposer shall be provided with a door for inserting disposed napkins, and shall be surface mounted.

2.2.5 Shower Curtain (SC)

Shower curtain shall conform to CID A-A-2398, Style I, size to suit conditions. Curtain shall be anti-bacterial nylon/vinyl fabric. Color shall be as shown in Section 09915 COLOR SCHEDULE.

2.2.6 Shower Curtain Rods (SCR)

Shower curtain rods shall be Type 304 stainless steel 1-1/4 inch OD by 0.049 inch minimum straight to meet installation conditions.

2.2.7 Soap Dispenser (SD)

Soap dispenser shall be surface mounted, liquid type consisting of a vertical Type 304 stainless steel tank with holding capacity of 40 fluid ounces with a corrosion-resistant all-purpose valve that dispenses liquid soaps, lotions, detergents and antiseptic soaps.

2.2.8 Soap Holder (SH)

Soap holder shall besurface mounted Type 304 stainless steel. Separate supports shall be stainless steel.

2.2.9 Towel Pin (TP)

Towel pin shall have concealed wall fastenings, and a pin integral with or permanently fastened to wall flange. Maximum projection shall be 4 inches. Design shall be consistent with design of other accessory items. Finish shall be satin.

2.2.10 Toilet Tissue Dispenser (TTD)

Toilet tissue holder shall be Type II - surface mounted with two rolls of standard tissue mounted horizontally. Cabinet shall be stainless steel, satin finish.

2.2.11 Electric Hand Dryer (EHD)

Electric hand dryer shall be wall mounted and shall be designed to operate on 110/125 volts, 60 cycle, single phase alternating current with a heating

element core rating of not more than 2100 watts. Dryer housing shall be of single piece construction and shall be white porcelain enamel.

2.2.12 Mop Holder with Shelf Janitor Closet

Mop holder with shelf shall have six hooks and five mop holders, and shall be mounted on an 18 gage support bar. An 18 gage, 8 inch wide stainless steel shelf shall be an integral part of the support bar unit. Each hook strip shall be secured with two stainless steel screws and hex nuts to the mounting bar. Each mop holder shall have a spring loaded bubber cam with a non-slip coating. Mounting bar and shelf unit size shall be approximately 13 inches high and 27 inches in lenght. Each hook shall not project mor than 2 1/4 inches from the finish face of the wall.

PART 3 EXECUTION

3.1 INSTALLATION

Toilet accessories shall be securely fastened to the supporting construction in accordance with the manufacturer's approved instructions. Accessories shall be protected from damage from the time of installation until acceptance.

3.2 CLEANING

Material shall be cleaned in accordance with manufacturer's recommendations. Alkaline or abrasive agents shall not be used. Precautions shall be taken to avoid scratching or marring of surfaces.

3.3 SCHEDULE

Accessories Required

Administration Operations Facility

Room	GB1	GB2	MG	PTDWR	SND	SC/SCR	SD	SH	TP	TTD	EHD/EHHD
123						4/4		2	4		
124	1	1	1	1	-		2			2	1/1
127	1	1	1	1	1		1			1	1/1
128						2/2		1	5		

-- End of Section --

SECTION TABLE OF CONTENTS

DIVISION 11 - EQUIPMENT

SECTION 11310A

PUMPS; SEWAGE SERVICE LIFT STATION 800 & W-900

11/90

PART 1 GENERAL

1.1 REFERENCES
1.2 SUBMITTALS
1.3 DELIVERY AND STORAGE
1.4 FIELD MEASUREMENTS

PART 2 PRODUCTS

2.1 GENERAL MATERIAL AND EQUIPMENT REQUIREMENTS
2.1.1 Nameplates
2.1.2 Equipment Guards
2.1.3 Special Tools
2.1.4 Electric Motors
2.1.5 Motor Controls
2.1.6 Bolts, Nuts, Anchors, and Washers
2.1.7 Pressure Gauges
2.2 SUBMERSIBLE CENTRIFUGAL PUMPS
2.2.1 Pump Characteristics
2.2.2 Pump Casing
2.2.3 Mating Surfaces
2.2.4 Coatings
2.2.5 Impeller
2.2.6 Wearing Rings
2.2.7 Pump Shaft
2.2.8 Seals
2.2.9 Bearings
2.2.10 Motor
2.2.11 Power Cable
2.2.12 Installation Systems
2.2.12.1 Rail Mounted Systems
2.3 ELECTRICAL WORK

PART 3 EXECUTION

3.1 EQUIPMENT INSTALLATION
3.1.1 Pump Installation
3.1.2 Concrete
3.2 PAINTING
3.3 FIELD TESTING AND ADJUSTING EQUIPMENT
3.3.1 Operational Test
3.3.2 Retesting
3.4 MANUFACTURER'S SERVICES
3.5 POSTING FRAMED INSTRUCTIONS
3.6 FIELD TRAINING

-- End of Section Table of Contents --

SECTION 11310A

PUMPS; SEWAGE SERVICE LIFT STATION 800 & W-900
11/90

PART 1 GENERAL

Contractor shall be required to provide temporary by-pass service prior to taking the existing lift station out of service.

1.1 REFERENCES

The publications listed below form a part of this specification to the extent referenced. The publications are referred to in the text by the basic designation only.

AMERICAN BEARING MANUFACTURERS ASSOCIATION (ABMA)

ABMA 9	(1990; R 2000) Load Ratings and Fatigue Life for Ball Bearings
ABMA 11	(1990; R 1999) Load Ratings and Fatigue Life for Roller Bearings

AMERICAN SOCIETY FOR TESTING AND MATERIALS (ASTM)

ASTM A 153/A 153M	(1998) Zinc Coating (Hot-Dip) on Iron and Steel Hardware

ASME INTERNATIONAL (ASME)

ASME B40.1	(1991) Gauges - Pressure Indicating Dial Type - Elastic Element

NATIONAL ELECTRICAL MANUFACTURERS ASSOCIATION (NEMA)

NEMA ICS 1	(1993) Industrial Controls and Systems
NEMA MG 1	(1993; Rev 1; Rev 2; Rev 3; Rev 4) Motors and Generators

NATIONAL FIRE PROTECTION ASSOCIATION (NFPA)

NFPA 70	(2002) National Electrical Code

1.2 SUBMITTALS

Government approval is required for submittals with a "G" designation; submittals not having a "G" designation are for information only. When used, a designation following the "G" designation identifies the office that will review the submittal for the Government. The following shall be submitted in accordance with Section 01330 SUBMITTAL PROCEDURES:

SD-02 Shop Drawings

Equipment Installation; G-RE

Drawings containing complete wiring and schematic diagrams and any other details required to demonstrate that the system has been coordinated and will properly function as a unit. Drawings shall show proposed layout and anchorage of equipment and appurtenances, and

equipment relationship to other parts of the work including clearances for maintenance and operation.

SD-03 Product Data

Sewage and Sludge Pump System; G-AE

Pump characteristic curves showing capacity in gpm, net positive suction head (NPSH), head, efficiency, and pumping horsepower from 0 gpm to 110 percent (100 percent for positive displacement pumps) of design capacity. A complete list of equipment and material, including manufacturer's descriptive data and technical literature, performance charts and curves, catalog cuts, and installation instructions.

Spare Parts; G-RE

Spare parts data for each different item of material and equipment specified, after approval of the related submittals, and not later than 3 months prior to the date of beneficial occupancy. The data shall include a complete list of parts and supplies, with current unit prices and source of supply.

Sewage and Sludge Pump System; G-AE

Diagrams, instructions, and other sheets proposed for posting.

SD-06 Test Reports

Field Testing and Adjusting Equipment; G-RE

Performance test reports in booklet form showing all field tests performed to adjust each component and all field tests performed to prove compliance with the specified performance criteria, upon completion and testing of the installed system. Each test report shall indicate the final position of controls.

SD-10 Operation and Maintenance Data

Sewage and Sludge Pump System; G-RE

Six copies of operation and six copies of maintenance manuals for the equipment furnished. One complete set prior to performance testing and the remainder upon acceptance. Operation manuals shall detail the step-by-step procedures required for system startup, operation, and shutdown. Operation manuals shall include the manufacturer's name, model number, parts list, and brief description of all equipment and their basic operating features. Maintenance manuals shall list routine maintenance procedures, possible breakdowns and repairs, and troubleshooting guides. Maintenance manuals shall include piping and equipment layout and simplified wiring and control diagrams of the system as installed. Manuals shall be approved prior to the field training course.

1.3 DELIVERY AND STORAGE

All equipment delivered and placed in storage shall be stored with protection from the weather, excessive humidity and excessive temperature variation; and dirt, dust, or other contaminants.

1.4 FIELD MEASUREMENTS

The Contractor shall become familiar with all details of the work, verify all dimensions in the field, and shall advise the Contracting Officer of any

discrepancy before performing the work.

PART 2 PRODUCTS

2.1 GENERAL MATERIAL AND EQUIPMENT REQUIREMENTS

Materials and equipment shall be the standard products of a manufacturer regularly engaged in the manufacture of such products and shall essentially duplicate items that have been in satisfactory use for at least 2 years prior to bid opening. Equipment shall be supported by a service organization that is, in the opinion of the Contracting Officer, reasonably convenient to the site. Pump casings shall be constructed of cast iron of uniform quality and free from blow holes, porosity, hard spots, shrinkage defects, cracks, and other injurious defects. Impellers shall be cast iron .

2.1.1 Nameplates

Each major item of equipment shall have the manufacturer's name, address, type or style, model or serial number, and catalog number on a plate secured to the item of equipment.

2.1.2 Equipment Guards

Belts, pulleys, chains, gears, projecting setscrews, keys, and other rotating parts so located that any person may come in close proximity thereto shall be enclosed or guarded.

2.1.3 Special Tools

One set of special tools, calibration devices, and instruments required for operation, calibration, and maintenance of the equipment shall be provided.

2.1.4 Electric Motors

Motors shall conform to NEMA MG 1.

2.1.5 Motor Controls

Controls shall conform to NEMA ICS 1.

2.1.6 Bolts, Nuts, Anchors, and Washers

Bolts, nuts, anchors, and washers shall be steel; galvanized in accordance with ASTM A 153/A 153M.

2.1.7 Pressure Gauges

Compound gauges shall be provided on the suction side of pumps and standard pressure gauges on the discharge side of pumps. Gauges shall comply with ASME B40.1. Gauge ranges shall be as appropriate for the particular installation.

2.2 SUBMERSIBLE CENTRIFUGAL PUMPS

Submersible centrifugal pumps shall be centrifugal type pumps designed to pump solids up to 3 inches in diameter and shall be capable of withstanding submergence as required for the particular installation.

2.2.1 Pump Characteristics

Pump numbers 1&2 located in Lift Station 805 shall have the following operating characteristics:

a. Pump Service: Raw Sewage at Lift Station 805.

b. Design Operating Point: 200 gpm flow, 107 feet head, 41 percent efficiency.

c. Maximum Operating Point: 240 gpm flow, 103 feethead, 45 percent efficiency.

d. Minimum Operating Point: 80 gpm flow, 121 feethead, 21 percent efficiency.

e. Impeller Type: Two Van, Closed or Open.

f. Operating Speed: 1150 rpm.

g. Depth of Submergence: 1 feet.

h. Motor Type: Specified below.

i. Electrical Characteristics: See drawings for voltage and phase information. 60 Hz.

j. Size: Within rated load driving pump at specified rpm.

k. Pump Control: See drawings.

Pump numbers 1&2 located in Lift Station W-900 shall have the following operating characteristics:

a. Pump Service: Raw Sewage at Lift Station W-900.

b. Design Operating Point: 240 gpm flow, 36.5 feet head, 59 percent efficiency.

c. Maximum Operating Point: 288 gpm flow, 34 feethead, 65 percent efficiency.

d. Minimum Operating Point: 144 gpm flow, 41 feethead, 46 percent efficiency.

e. Impeller Type: Two Van, Semi-open or Open.

f. Operating Speed: 1150 rpm.

g. Depth of Submergence: 1 feet.

h. Motor Type: Specified below.

i. Electrical Characteristics: See drawings for voltage and phase information , 60 Hz.

j. Size: Within rated load driving pump at specified rpm.

k. Pump Control: See Drawings.

2.2.2 Pump Casing

The casing shall be capable of withstanding operating pressures 50 percent greater than the maximum operating pressures. The volute shall have smooth passages which provide unobstructed flow through the pump.

2.2.3 Mating Surfaces

Mating surfaces where watertight seal is required, including seal between

discharge connection elbow and pump, shall be machined and fitted with nitrile rubber O-rings. Fitting shall be such that sealing is accomplished by metal-to-metal contact between mating surfaces, resulting in proper compression of the O-rings without the requirement of specific torque limits.

2.2.4 Coatings

Exterior surfaces of the casing in contact with sewage shall be protected by a sewage resistant coal tar epoxy coating. All exposed nuts and bolts shall be stainless steel.

2.2.5 Impeller

The impeller shall be of the double shrouded non-clogging design to minimize clogging of solids, fibrous materials, heavy sludge, or other materials found in sewage. The impeller shall be statically, dynamically, and hydraulically balanced within the operating range and to the first critical speed at 150 percent of the maximum operating speed. The impeller shall be securely keyed to the shaft with a locking arrangement whereby the impeller cannot be loosened by torque from either forward or reverse direction.

2.2.6 Wearing Rings

Wearing rings, when required, shall be renewable type and shall be provided on the impeller and casing and shall have wearing surfaces normal to the axis of rotation. Material for wear rings shall be standard of pump manufacturer. Wearing rings shall be designed for ease of maintenance and shall be adequately secured to prevent rotation.

2.2.7 Pump Shaft

The pump shaft shall be of high grade alloy steel and shall be of adequate size and strength to transmit the full driver horsepower with a liberal safety factor.

2.2.8 Seals

A tandem mechanical shaft seal system running in an oil bath shall be provided. Seals shall be of Tungsten carbide with each interface held in contact by its own spring system. Conventional mechanical seals which require a constant pressure differential to effect sealing will not be allowed.

2.2.9 Bearings

Pump bearings shall be ball or roller type designed to handle all thrust loads in either direction. Pumps depending only on hydraulic balance end thrust will not be acceptable. Bearings shall have an ABEMA L-10 life of 50,000 hours minimum, as specified in ABMA 9 or ABMA 11.

2.2.10 Motor

The pump motor shall have Class F insulation, NEMA B design, in accordance with NEMA MG 1, and shall be watertight. The motor shall be either oil filled, air filled with a water jacket, or air filled with cooling fins which encircles the stator housing.

2.2.11 Power Cable

The power cable shall comply with NFPA 70, Type SO, and shall be of standard construction for submersible pump applications. The power cable shall enter the pump through a heavy duty entry assembly provided with an internal grommet assembly to prevent leakage. The cable entry junction chamber and motor shall be separated by a stator lead sealing gland or terminal board which shall isolate the motor interior from foreign material gaining access through the

pump top. Epoxies, silicones, or other secondary sealing systems are not acceptable.

2.2.12 Installation Systems

2.2.12.1 Rail Mounted Systems

Rail mounted installation systems shall consist of guide rails, a sliding bracket, and a discharge connection elbow. Guide rails shall be of the size and type standard with the manufacturer and shall not support any portion of the weight of the pump. The sliding guide bracket shall be an integral part of the pump unit. The discharge connection elbow shall be permanently installed in the wet well along with the discharge piping. The pump shall be automatically connected to the discharge connection elbow when lowered into place and shall be easily removed for inspection and service without entering the pump well.

2.3 ELECTRICAL WORK

Electrical motor driven equipment specified shall be provided complete with motors, motor starters, and controls. Electric equipment and wiring shall be in accordance with Section 16415A ELECTRICAL WORK, INTERIOR. Electrical characteristics shall be as specified or indicated. Motor starters shall be provided complete with thermal overload protection and other appurtenances necessary for the motor control specified. Manual or automatic control and protective or signal devices required for the operation specified, and any control wiring required for controls and devices but not shown, shall be provided.

PART 3 EXECUTION

3.1 EQUIPMENT INSTALLATION

3.1.1 Pump Installation

Pumping equipment and appurtenances shall be installed in the position indicated and in accordance with the manufacturer's written instructions. All appurtenances required for a complete and operating pumping system shall be provided, including such items as piping, conduit, valves, wall sleeves, wall pipes, concrete foundations, anchors, grouting, pumps, drivers, power supply, seal water units, and controls.

3.1.2 Concrete

Concrete shall conform to Section 03300 CAST-IN-PLACE STRUCTURAL CONCRETE.

3.2 PAINTING

Pumps and motors shall be thoroughly cleaned, primed, and given two finish coats of paint at the factory in accordance with the recommendations of the manufacturer. Field painting required for ferrous surfaces not finished at the factory is specified in Section 09900 PAINTS AND COATINGS.

3.3 FIELD TESTING AND ADJUSTING EQUIPMENT

3.3.1 Operational Test

Prior to acceptance, an operational test of all pumps, drivers, and control systems shall be performed to determine if the installed equipment meets the purpose and intent of the specifications. Tests shall demonstrate that the equipment is not electrically, mechanically, structurally, or otherwise defective; is in safe and satisfactory operating condition; and conforms with the specified operating characteristics. Prior to applying electrical power to any motor driven equipment, the drive train shall be rotated by hand to

demonstrate free operation of all mechanical parts. Tests shall include checks for excessive vibration, leaks in all piping and seals, correct operation of control systems and equipment, proper alignment, excessive noise levels, and power consumption.

3.3.2 Retesting

If any deficiencies are revealed during any test, such deficiencies shall be corrected and the tests shall be reconducted.

3.4 MANUFACTURER'S SERVICES

Services of a manufacturer's representative who is experienced in the installation, adjustment, and operation of the equipment specified shall be provided. The representative shall supervise the installation, adjustment, and testing of the equipment.

3.5 POSTING FRAMED INSTRUCTIONS

Framed instructions containing wiring and control diagrams under glass or in laminated plastic shall be posted where directed. Condensed operating instructions, prepared in typed form, shall be framed as specified above and posted beside the diagrams. The framed instructions shall be posted before acceptance testing of the system.

3.6 FIELD TRAINING

A field training course shall be provided for designated operating and maintenance staff members. Training shall be provided for a total period of 4 hours of normal working time and shall start after the system is functionally complete but prior to final acceptance tests. Field training shall cover all of the items contained in the operating and maintenance manuals.

-- End of Section --

SECTION TABLE OF CONTENTS

DIVISION 11 - EQUIPMENT

SECTION 11312N

PACKAGE GRINDER PUMPLIFT STATION

01/01

PART 1 GENERAL

1.1 REFERENCES
1.2 DESCRIPTION OF WORK
1.3 SUBMITTALS
1.4 DELIVERY, STORAGE, AND HANDLING OF MATERIALS
1.4.1 Delivery and Storage
1.4.2 Handling
1.5 EXCAVATION, TRENCHING, AND BACKFILLING

PART 2 PRODUCTS

2.1 PIPE AND FITTINGS
2.1.1 Ductile-Iron Pipe
2.1.1.1 Flanged Pipe
2.1.1.2 Fittings
2.1.1.3 Joints
2.1.2 PVC Plastic Pressure Pipe and Associated Fittings
2.1.2.1 Pipe and Fittings Less Than 4 inch Diameter
2.1.3 Insulating Joints
2.1.4 Accessories
2.1.5 Flexible Flanged Coupling
2.2 VALVES AND OTHER PIPING ACCESSORIES
2.2.1 Gate Valves in Valve Vault
2.2.2 Check Valves Less Than 4 Inch Diameter
2.2.3 Identification Tags and Plates
2.2.4 Pipe Support
2.2.5 Miscellaneous Metals
2.2.6 Quick Disconnect System with Hydraulic Sealing Flange
2.2.7 Wet Well Vent
2.3 SUBMERSIBLE SEWAGE GRINDER PUMPS
2.3.1 Casing
2.3.2 Impeller
2.3.3 Shaft and Shaft Seals
2.3.4 Bearings
2.3.5 Pump and Motor
2.4 PUMP MOTOR
2.5 PUMP CONTROL SYSTEM
2.5.1 Float Assembly Description
2.5.2 Alternator
2.5.3 Sewage Pump Alarm and Control Panel
2.5.4 Electrical Requirements
2.5.5 Electric Motor
2.6 UNDERGROUND EQUIPMENT ENCLOSURE
2.6.1 Access Hatch Cover
2.6.2 Wet Well and Valve Vault
2.6.2.1 Cast-In-Place Concrete Structures
2.6.2.2 Precast Concrete Structures
2.6.3 Wet Well Base Material

PART 3 EXECUTION

3.1 INSTALLATION
3.1.1 Installation of Ductile-Iron Pressure Lines
3.1.2 Installation of PVC Plastic Pressure Pipe and Fittings
3.1.3 Valves
3.1.4 Force Main
3.1.5 Equipment Installation
3.2 FIELD TESTS AND INSPECTIONS
3.2.1 Testing Procedure
3.2.2 Sewage Grinder PumpLift Station

-- End of Section Table of Contents --

SECTION 11312N

PACKAGE GRINDER PUMPLIFT STATION
01/01

PART 1 GENERAL

1.1 REFERENCES

The publications listed below form a part of this specification to the extent referenced. The publications are referred to in the text by the basic designation only.

AMERICAN ASSOCIATION OF STATE HIGHWAY AND TRANSPORTATION OFFICIALS (AASHTO)

AASHTO M 198	(1998) Joints for Circular Concrete Sewer and Culvert Pipe Using Flexible Watertight Gaskets

ASME INTERNATIONAL (ASME)

ASME B1.20.1	(1983) Pipe Threads, General Purpose (Inch)
ASME B16.1	(1998) Cast Iron Pipe Flanges and Flanged Fittings

AMERICAN NATIONAL STANDARDS INSTITUTE (ANSI)

ANSI B16.3	(1998) Malleable Iron Threaded Fittings Classes 150 and 300
ANSI B16.11	(1996) Forged Steel Fittings, Socket Welded and Threaded
AWWA C151	(1996) Ductile-Iron Pipe, Centrifugally Cast, for Water or Other Liquids

AMERICAN SOCIETY FOR TESTING AND MATERIALS (ASTM)

ASTM A 53/A 53M	(1999; Rev. B) Pipe, Steel, Black and Hot-Dipped, Zinc-Coated Welded and Seamless
ASTM A 123/A 123M	(2000) Zinc (Hot-Dip Galvanized) Coatings on Iron and Steel Products
ASTM A 536	(1984; R 1999) Ductile Iron Castings
ASTM A 615/A 615M	(2000) Deformed and Plain Billet-Steel Bars for Concrete Reinforcement
ASTM C 443/C 443M	(1998) Joints for Circular Concrete Sewer and Culvert Pipe, Using Rubber Gaskets
ASTM C 478/C 478M	(1999; Rev. A) Precast Reinforced Concrete Manhole Sections
ASTM D 1784	(1999) Rigid Poly(Vinyl Chloride) (PVC) Compounds and Chlorinated Poly(Vinyl Chloride) (CPVC) Compounds
ASTM D 1785	(1999) Poly(Vinyl Chloride) (PVC) Plastic Pipe,

	Schedules 40, 80, and 120
ASTM D 2241	(2000)1980 Poly (Vinyl Chloride) (PVC) Plastic Pipe (SDR-PR)
ASTM D 2464	(1999) Threaded Poly(Vinyl Chloride) (PVC) Plastic Pipe Fittings, Schedule 80
ASTM D 2466	(1999) Poly(Vinyl Chloride) (PVC) Plastic Pipe Fittings, Schedule 40
ASTM D 2467	(1999) Poly(Vinyl Chloride) (PVC) Plastic Pipe Fittings, Schedule 80
ASTM D 3139	(1998) Joints for Plastic Pressure Pipes Using Flexible Elastomeric Seals
ASTM F 477	(1999) Elastomeric Seals (Gaskets) for Joining Plastic Pipe

AMERICAN WATER WORKS ASSOCIATION (AWWA)

AWWA C104	(1995) Cement-Mortar Lining for Ductile-Iron Pipe and Fittings for Water
AWWA C110	(1998) Ductile-Iron and Gray-Iron Fittings, 3 in. Through 48 in. (75 mm Through 1200 mm), for Water
AWWA C111	(2000) Rubber-Gasket Joints for Ductile-Iron Pressure Pipe and Fittings
AWWA C115	(1999) Flanged Ductile-Iron Pipe with Ductile-Iron or Gray-Iron Threaded Flanges
AWWA C500	(1993) Metal-Seated Gate Valves for Water and Systems
AWWA C509	(1994) Resilient-Seated Gate Valves for Water and Sewerage Systems
AWWA C600	(1999) Installation of Ductile-Iron Water Mains and Their Appurtenances
AWWA M23	(1980) PVC Pipe - Design and Installation

NATIONAL ELECTRICAL MANUFACTURERS ASSOCIATION (NEMA)

NEMA MG 1	(1998) Motors and Generators

1.2 DESCRIPTION OF WORK

The work includes removing the existing lift station 770 & 778 indicated and replacing with the new lift stations. Contractor shall be required to provide temporary by-pass service prior to taking the existing lift station out of service. Contractor also requires providing submersible sewage grinder pump station and related work. Provide system complete and ready for operations. Grinder pump station system including equipment, materials, installation, and workmanship shall be as specified herein.

1.3 SUBMITTALS

Submit the following in accordance with Section 01330, "Submittal Procedures."

SD-03 Product Data

Pipe and fittings; G-RE

Check valves; G-AE

Gate valves; G-AE

Submersible sewage grinder pumps; G-AE

Pump motor; G-AE

Flexible flanged coupling; G-RE

SD-10 Operation and Maintenance Data

Submersible Sewage Grinder Pumps Data Package 3; G-RE

Include pumps, alarms, and motors. Include all information on all equipment, alarm panel and controls, pumps and pump performance curves, and station layout in data for submersible sewage grinder pump station.

1.4 DELIVERY, STORAGE, AND HANDLING OF MATERIALS

1.4.1 Delivery and Storage

Inspect materials delivered to site for damage. Unload and store with minimum handling. Store materials in enclosures or under protective covering. Store rubber gaskets not to be installed immediately under cover, out of direct sunlight. Do not store materials directly on the ground. Keep interior of pipes and fittings free of dirt and debris.

1.4.2 Handling

Handle pipe, fittings, valves, and other accessories in such manner as to ensure delivery to the trench in sound, undamaged condition. Avoid injury to coatings and linings on pipe and fittings; make satisfactory repairs if coatings or linings are damaged. Carry pipe to the trench; do not drag it.

1.5 EXCAVATION, TRENCHING, AND BACKFILLING

Provide in accordance with Section 02316a "Excavation,Trenching and Backfilling for Utilities Systems," except as specified herein.

PART 2 PRODUCTS

2.1 PIPE AND FITTINGS

Provide pressure piping, air release valves, and related accessories for force main piping outside the sewage wet well and valve vault in accordance with Section 02531a "Sanitary Sewers".

2.1.1 Ductile-Iron Pipe

AWWA C151, thickness Class 52.

2.1.1.1 Flanged Pipe

AWWA C115, ductile iron.

2.1.1.2 Fittings

AWWA C110, flanged. Provide flanged joint fittings within wet well and valve vault as indicated. Provide mechanical joint fittings outside valve vault enclosure as indicated. Use fittings with pressure rating at least equivalent to that of the pipe.

2.1.1.3 Joints

AWWA C115 for flanged joints. Use bolts, nuts, and gaskets for flanged connections recommended in the Appendix to AWWA C115. Flange for setscrewed flanges shall be of ductile iron, ASTM A 536, Grade 65-45-12, conforming to the applicable requirements of ASME B16.1, Class 250. Setscrews for setscrewed flanges shall be 190,000 psi tensile strength, heat treated, and zinc-coated steel. Gasket for setscrewed flanges shall conform to the applicable requirements for mechanical-joint gaskets specified in AWWA C111. Use setscrewed gasket designed to provide for confinement and compression of gasket when joint to adjoining flange is made.

2.1.2 PVC Plastic Pressure Pipe and Associated Fittings

2.1.2.1 Pipe and Fittings Less Than 4 inch Diameter

Use pipe, couplings and fittings manufactured of materials conforming to ASTM D 1784, Class 12454-B.

(1) Screw-Joint: Use pipe conforming to dimensional requirements of ASTM D 1785 Schedule 80, with joints meeting requirements of 150 psi working pressure, 200 psi hydrostatic test pressure, unless otherwise shown or specified. Use threaded pipe fittings conforming to requirements of ASTM D 2464, threaded to conform to the requirements of ASME B1.20.1 for use with Schedule 80 pipe and fittings. Test pipe couplings when used, as required by ASTM D 2464.

(2) Push-On Joint: ASTM D 3139, with ASTM F 477 gaskets. Fittings for push-on joints: AWWA C110 or AWWA C111. Iron fittings and specials: cement-mortar lined (standard thickness) in accordance with AWWA C104.

(3) Solvent Cement Joint: Use pipe conforming to dimensional requirements of ASTM D 1785 or ASTM D 2241 with joints meeting the requirements of 150 psi working pressure and 200 psi hydrostatic test pressure. USe fittings for solvent cement jointing conforming to ASTM D 2466 or ASTM D 2467.

2.1.3 Insulating Joints

Provide between pipes of dissimilar metals a rubber gasket or other approved type of insulating joint or dielectric coupling to effectively prevent metal-to-metal contact between adjacent sections of piping.

2.1.4 Accessories

Provide flanges, connecting pieces, transition glands, transition sleeves, and other adapters as required.

2.1.5 Flexible Flanged Coupling

Provide flexible flanged coupling applicable for sewage as indicated. Use flexible flanged coupling designed for a working pressure of 350 psi.

2.2 VALVES AND OTHER PIPING ACCESSORIES

2.2.1 Gate Valves in Valve Vault

AWWA C500 and AWWA C509. Valves conforming to AWWA C500 shall be

outside-screw-and-yoke rising-stem type with double disc gates and flanged ends. Valves conforming to AWWA C509 shall be outside-screw-and-yoke rising-stem type with flanged ends. Provide valves with handwheels that open by counterclockwise rotation of the valve stem. Bolt and construct stuffing boxes to permit easy removal of parts for repair. Use valves from one manufacturer.

2.2.2 Check Valves Less Than 4 Inch Diameter

Neoprene ball check valve with integral hydraulic sealing flange, designed for a hydraulic working pressure of 175 psi.

2.2.3 Identification Tags and Plates

Provide valves with tags or plates numbered and stamped for their usage. Use plates and tags of brass or nonferrous material and mounted or attached to the valve.

2.2.4 Pipe Support

Use pipe support schedule 40 galvanized steel piping conforming to ASTM A 53/A 53M. Provide either ANSI B16.3 or ANSI B16.11 galvanized threaded fittings.

2.2.5 Miscellaneous Metals

Use stainless steel bolts, nuts, washers, anchors, and supports for installation of equipment.

2.2.6 Quick Disconnect System with Hydraulic Sealing Flange

Use quick disconnect system consisting of a steel base plate for supporting the pumps, a hydraulic sealing flange, pump guide rails and the discharge pipe supports. Use two guide rails of galvanized steel in accordance with ASTM A 123/A 123M. Provide a steel lifting chain for raising and lowering the pump in the basin. Build guides onto pump housing to fit the guide post to assure perfect alignment between pump and guide rails.

2.2.7 Wet Well Vent

Galvanized ASTM A 53/A 53M pipe with insect screening.

2.3 SUBMERSIBLE SEWAGE GRINDER PUMPS

Provide submersible sewage pumps with grinder units as shown on the drawings. Provide submersible, grinder units capable of grinding all materials found in normal domestic sewage, including plastics, rubber, sanitary napkins, disposable diapers, and wooden articles into a finely ground slurry with particle dimensions no greater than 1/4 inch. Pump capacity and motor characteristics as indicated. Design pump to operate in a submerged or partially submerged condition. Provide an integral sliding guide bracket and two guide bars capable of supporting the entire weight of the pumping unit.

2.3.1 Casing

Provide hard, close-grained cast iron casing which is free from blow holes, porosity, hard spots, shrinkage defects, cracks, and other injurious defects. Design casings to permit replacement of wearing parts. Design passageways to permit smooth flow of sewage and to be free of sharp turns and projections.

2.3.2 Impeller

Provide non-clogging type cast-iron, or bronze impeller. Make impeller with smooth surfaces, free flowing with the necessary clearance to permit objects in the sewage to pass. Fit and key, spline, or thread impeller on shaft, and lock

in such manner that lateral movement will be prevented and reverse rotation will not cause loosening.

2.3.3 Shaft and Shaft Seals

Provide shaft of stainless steel. Provide mechanical seal of double carbon and ceramic construction with mating surfaces lapped to a flatness tolerance of one light band. Hold rotating ceramics in mating position with stationary carbons by a stainless steel spring. Oil lubricate bearings.

2.3.4 Bearings

Provide heavy duty ball thrust bearing or roller type bearing of adequate size to withstand imposed loads. Oil lubricate bearings.

2.3.5 Pump and Motor

Use pump and motor assembled on a single stainless steel shaft in a heavy duty cast-iron shell. Use free standing pump support legs of cast-iron providing enough clearance for the solids to get into the grinder.

2.4 PUMP MOTOR

Provide submersible sewage pumps in wet well NEMA MG 1, 60 GPM, 60 Hz cycle with voltage and phase configuration as shown on the drawings and for submersible pumps. Motor horsepower shall be not less than pump horsepower at any point on the pump performance curve. Fit motors with lifting "eyes" capable of supporting entire weight of pump and motor.

2.5 PUMP CONTROL SYSTEM

Provide a sealed mercury float switch control system as indicated. Automatically alternate operation from one pump to the other and start second pump in the event first pump cannot handle incoming flow. Provide manual "on-off" switch for each pump. Provide independent adjustable high and low water level switches. Provide floats, supports, and alarm. Metal parts, if used, shall be of bronze or equivalent corrosion resistant material.

2.5.1 Float Assembly Description

Use a direct acting float switch consisting of a normally-open mercury switch enclosed in a float. Use pipe mounted float assembly. Use float molded of rigid high-density polyurethane foam, color-coded and coated with a durable, water and corrosion-resistant jacket of clear urethane. Provide connecting cable and support pole in accordance with manufacturers recommendations. Mount floats at fixed elevations as shown. Use floats designed to tilt and operate their switches causing sequential turn-on turn-off of the pump, when the liquid level being sensed rises or falls past the float.

2.5.2 Alternator

Provide an alternator control switch to operate in connection with each float. Use alternator control switch to alternate the operation of the pumps and operate both pumps if the water level rises above the second high water level. Incorporate time delay function and devices in the alternator controls such that both sewage pumps cannot be started simultaneously for an adjustable period of 10 to 120 seconds after shutdown. Use delay function designed to operate in any condition of start-up in either normal or emergency operational mode.

2.5.3 Sewage Pump Alarm and Control Panel

Enclose alarm panel in NEMA IV enclosure and with a flashing red light with long life bulb in guarded enclosure and 8 inch diameter weather proof bell. Bell

shall emit 120 DB at 10 feet. Use panel swith power on light, push to test button for horn and light and push to silence button for horn and light with automatic reset for next alarm. Use alarm designed to activate under the following conditions:

a. High liquid level as sensed by float switch

b. Pump #1 Seal Failure

c. Pump #2 Seal Failure

2.5.4 Electrical Requirements

Furnish motors with their respective pieces of equipment. Motors, controllers, contactors, and disconnects shall be as specified in Section 16415A "Electrical Work, Interior." Furnish internal wiring for components of packaged equipment as an integral part of the equipment. Provide power wiring and conduit for field installed equipment.

2.5.5 Electric Motor

Use hermetically sealed electric motor. The power cable shall be sealed inside the motor end bell. The cable shall be neoprene covered with a flexible metal cover over it for its full length.

2.6 UNDERGROUND EQUIPMENT ENCLOSURE

2.6.1 Access Hatch Cover

Provide aluminum access hatch cover as indicated. The access hatch shall include lifting mechanism, automatic hold open arm, slam lock with handle, and flush lift handle with red vinyl grip. Use automatic hold open arm that locks in the 90 degree position. Use cover that is 1/4 inch diamond plate with 1/4 inch channel frame and continuous anchor flange. USe access hatch cover capable of withstanding a live load of 300 lbs./sq. ft. Provide stainless steel cylinder lock with two keys per lock. Key all the locks the same.

2.6.2 Wet Well and Valve Vault

Provide concrete wet well and Valve Vault with inside diameter as indicated. Precast structures may be provided in lieu of cast-in-place structures.

2.6.2.1 Cast-In-Place Concrete Structures

Provide wet well and valve vault with a compressive strength of 3000 psi at 28 days as specified in Section 03300 "Cast-In-Place Structural Concrete."

2.6.2.2 Precast Concrete Structures

ASTM C 478/C 478M, except as specified herein. Provide precast concrete structures with a compressive strength of 4000 psi at 28 days and an air entrainment of 6 percent, plus, or minus 2 percent and a minimum wall thickness of 5 inches. ASTM A 615/A 615M reinforcing bars. ASTM C 443/C 443M or AASHTO M 198, Type B gaskets for joint connections. Use monolithic base and first riser.

2.6.3 Wet Well Base Material

Provide crushed stone as indicated and specified in Section 02315a "Excavation and Fill." Provide polyethylene vapor barrier as indicated and specified in Section 03300 "Cast-In-Place Structural Concrete."

PART 3 EXECUTION

3.1 INSTALLATION

Provide pump station in accordance with drawings and requirements of the respective equipment manufacturers. Dampen and isolate equipment vibration.

3.1.1 Installation of Ductile-Iron Pressure Lines

Unless otherwise specified, install pipe and fittings in accordance with paragraph entitled, "General Requirements for Installation of Pipelines" of Section 02531a "Sanitary Sewers," and with the requirements of AWWA C600 for pipe installation, joint assembly, and valve-and-fitting installation.

a. Make flanged joint with gaskets, bolts, and nuts specified for this type joint. Make flanged joints up tight, taking care to avoid undue strain on flanges, fittings, and other accessories. Align bolt holes for each flanged joint. Use size bolts for the bolt holes; use of undersized bolts to make up for misalignment of bolt holes or for any other purpose will not not be permitted. Do not allow adjoining flange faces to be out of parallel to such degree that the flanged joint cannot be made watertight without overstraining the flange.

3.1.2 Installation of PVC Plastic Pressure Pipe and Fittings

Unless otherwise specified, install pipe and fittings in accordance with paragraph entitled "General Requirements for Installation of Pipelines" of this section and with the recommendations for pipe joint assembly and appurtenance installation in AWWA M23, Chapter 7, "Installation."

a. Pipe Less than 4 Inch Diameter:

(1) Make threaded joints by wrapping the male threads with joint tape or by applying an approved thread lubricant, than threading the joining members together. Tighten joints with strap wrenches that will not damage the pipe and fittings. Do not tighten joint more than 2 threads past hand-tight.

(2) Push-On Joints: Bevel ends of pipe for push-on joints to facilitate assembly. Mark pipe to indicate when the pipe is fully seated. Lubricate gasket to prevent displacement. Exercise care to ensure that the gasket remains in proper position in the bell or coupling while making the joint.

(3) Solvent-weld joints shall comply with the manufacturer's instructions.

3.1.3 Valves

Installation of Valves: Install gate valves conforming to AWWA C500 in accordance with AWWA C600 for valve-and-fitting installation and with the recommendations of the Appendix ("Installation, Operation, and Maintenance of Gate Valves") to AWWA C500. Install gate valves conforming to AWWA C509 in accordance with AWWA C600 for valve-and-fitting installation and with the recommendations of the Appendix ("Installation, Operation, and Maintenance of Gate Valves") to AWWA C509. Install check valves in accordance with the applicable requirements of AWWA C600 for valve-and-fitting installation , except as otherwise indicated. Make and assemble joints to gate valves as specified for making and assembling the same type joints between pipe and fittings.

3.1.4 Force Main

Provide in accordance with Section 02532a "Force Mains; Sewer."

3.1.5 Equipment Installation

Install equipment in accordance with these specifications and the manufacturer's installation instructions. Grout equipment mounted on concrete foundations before installing piping. Install piping to avoid imposing stress on any equipment. Match flanges accurately before securing bolts.

3.2 FIELD TESTS AND INSPECTIONS

Perform all field tests, and provide all labor, equipment, and incidentals required for testing, except that water and electric power needed for field tests will be furnished as set forth in Division 01. Produce evidence, when required, that any item of work has been constructed in accordance with contract requirements. Allow concrete to cure a minimum of 5 days before testing any section of piping where concrete thrust blocks have been provided.

3.2.1 Testing Procedure

Test piping in accordance with the Section 02532a "Force Mains; Sewer". Test in operation all equipment to demonstrate compliance with the contract requirements.

3.2.2 Sewage Grinder PumpLift Station

Test pumps and controls, in operation, under design conditions to insure proper operation of all equipment. Provide all appliances, materials, water, and equipment for testing, and bear all expenses in connection with the testing. Conduct testing after all equipment is properly installed, electrical services and piping are installed, liquid is flowing, and the pump station is ready for operation. Correct all defects discovered to the satisfaction of the Contracting Officer, and all tests repeated, at the expense of the Contractor, until the equipment is in proper working order.

-- End of Section --

SECTION TABLE OF CONTENTS

DIVISION 11 - EQUIPMENT

SECTION 11601N

LABORATORY FUMEHOODS

09/99

PART 1 GENERAL

1.1 REFERENCES
1.2 RELATED WORK SPECIFIED IN OTHER SECTIONS
1.3 SUBMITTALS
1.4 SUBMITTAL REQUIREMENTS
1.4.1 Hood Paint
1.4.2 Drawing Requirements
1.4.4 Tests

PART 2 PRODUCTS

2.1 MATERIALS, COMPONENTS, AND SPECIAL DESIGN REQUIREMENTS
2.1.1 Aluminum Alloy
2.1.2 Carbon Steel
2.1.3 Stainless Steel
2.1.4 Safety Glass
2.1.5 High Efficiency Particulate Air (HEPA) Filter
2.1.6 Fumehood Design
2.1.7 Hood Static Pressure Loss
2.1.8 Electrical Devices
2.2 UNITS
2.2.1 Unit
2.2.1.1 Base Cabinet Portion of Assembly
2.2.2 Fumehood Assembly, Constant Volume
2.2.2.1 Base Cabinet Portion of Assembly
2.2.2.2 Hood Interior, Including Working Surface
2.2.2.3 Sash
2.2.2.4 Baffle
2.2.2.5 Lighting Fixtures
2.2.2.6 Service Fixtures
2.2.2.7 Blower Switch
2.2.2.8 Duct Stub

PART 3 EXECUTION

3.1 INSTALLATION
3.2 FIELD QUALITY CONTROL
3.2.1 Inspection
3.2.2 Tests

-- End of Section Table of Contents --

SECTION 11601N

LABORATORY FUMEHOODS
09/99

PART 1 GENERAL

1.1 REFERENCES

The publications listed below form a part of this specification to the extent referenced. The publications are referred to in the text by the basic designation only.

AMERICAN CONFERENCE OF GOVERNMENTAL INDUSTRIAL HYGIENISTS (ACGIH)

ACGIH 2080	(1992) Industrial Ventilation

AMERICAN SOCIETY FOR TESTING AND MATERIALS (ASTM)

ASTM A 167	(1996) Stainless and Heat-Resisting Chromium-Nickel Steel Plate, Sheet, and Strip
ASTM A 366/A 366M	(1997) Commercial Quality (CS) Steel, Carbon, (0.15 Maximum Percent) Cold-Rolled
ASTM B 221	(1996) Aluminum and Aluminum-Alloy Extruded Bars, Rods, Wire, Profiles, and Tubes
ASTM C 1048	(1997; Rev. B) Heat-Treated Flat Glass - Kind HS, Kind FT Coated and Uncoated Glass

NATIONAL FIRE PROTECTION ASSOCIATION (NFPA)

NFPA 45	(1996) Fire Protection for Laboratories Using Chemicals
NFPA 70	(2002) National Electrical Code

UNDERWRITERS LABORATORIES (UL)

UL 586	(1996) High-Efficiency, Particulate, Air Filter Units

1.2 RELATED WORK SPECIFIED IN OTHER SECTIONS

Conform to provisions of Section 12350A, "CASEWORK FOR MEDICAL AND DENTAL FACILITIES." Provide final utility connections and utility service to equipment including vacuum piping, under Divisions 15 and 16 of these specifications.

1.3 SUBMITTALS

Government approval is required for submittals with a "G" designation; submittals not having a "G" designation are for information only. When used, a designation following the "G" designation identifies the office that will review the submittal for the Government. The following shall be submitted in accordance with Section 01330 SUBMITTAL PROCEDURES:

SD-02 Shop Drawings

Laboratory fume hood layout; G-AE

Laboratory hood schedules

SD-03 Product Data

Fumehood assembly; G-AE

Radio isotope fumehood; G-RE

Include descriptive literature, technical data sheets, and diagrams.

SD-04 Samples

Exterior hood paint; G-AE

SD-06 Test Reports

Fumehood test; G-AE

SD-08 Manufacturer's Instructions

Fumehood assembly

Radio isotope fumehood

SD-10 Operation and Maintenance Data

Fumehood assembly, Data Package 2

Radio isotope fumehood, Data Package 2

Submit operation and maintenance data in accordance with Section 01781, "Operation and Maintenance Data."

1.4 SUBMITTAL REQUIREMENTS

1.4.1 Hood Paint

Submit color chips of exterior hood paint. Submit colors which are standard with the manufacturer.

1.4.2 Drawing Requirements

Show pertinent installation layout. Indicate details of construction and rough-in requirements.

1.4.4 Tests

Submit fumehood test reports required by ACGIH 2080.

PART 2 PRODUCTS

2.1 MATERIALS, COMPONENTS, AND SPECIAL DESIGN REQUIREMENTS

2.1.1 Aluminum Alloy

ASTM B 221 equivalent in ultimate tensile, yield, and shear strengths to Alloy 6063-T5 or 6063-T6.

2.1.2 Carbon Steel

ASTM A 366/A 366M, cold rolled sheets, commercial bright finish.

2.1.3 Stainless Steel

ASTM A 167; No 4 satin finish including welds and fabricated surfaces. Provide Type 302, 304, or 316 alloy unless otherwise specified. Provide minimum thickness of U.S. Standard 16 gage, except 14 gage for working surface.

2.1.4 Safety Glass

ASTM C 1048, fully tempered "FT," clear.

2.1.5 High Efficiency Particulate Air (HEPA) Filter

Meet requirements of UL 586.

2.1.6 Fumehood Design

Design, calculate face velocities, and test fume hoods in accordance with ACGIH 2080, Laboratory fume hoods, auxiliary systems, and associated equipment shall meet the requirements of NFPA 70 and NFPA 45.

2.1.7 Hood Static Pressure Loss

With the sash in full-open position the static pressure loss through the fumehood shall not exceed 1/2 inch water gage when operating at cubic feet per minute shown on the drawing.

2.1.8 Electrical Devices

Prewired at the factory to a common, integral junction box to provide easy exterior connection and disconnection.

2.2 UNITS

2.2.1 Unit

Fume hood shall be constant volume, auxiliary air configuration, enclosed unit mounted on base cabinet; exterior dimensions maximum 72 inches wide (across face) by 45 inches deep (front to back) by approximately 68 1/2 inches high excluding base cabinet.

2.2.1.1 Base Cabinet Portion of Assembly

Base cabinet shall be wood to match other base cabinets loccated in the room. Cabinet shall be modified to have recessed apron to contain electrical convenience outlets..

2.2.2 Fumehood Assembly, Constant Volume

2.2.2.1 Base Cabinet Portion of Assembly

Carbon steel, modified to have recessed apron to contain electrical convenience outlets.

2.2.2.2 Hood Interior, Including Working Surface

Type 304 stainless steel, with interior vertical joints and intersections of vertical surface with working surface having an approximate 3/4 inch radius. Provide working surface with a raised rim around all sides to prevent spillage from running out face of hood.

2.2.2.3 Sash

Safety glass, 7/32 inch minimum thickness, counterbalanced, vertical sliding

type, Type 304 stainless steel frame.

2.2.2.4 Baffle

Adjustable, with moving parts resistant to corrosion, removable for cleaning.

2.2.2.5 Lighting Fixtures

Explosion proof, fluorescent, with cool white lamps and switch, providing 75 foot candles on working area. Locate switch for fixture on exterior of hood frame, or in recess of base cabinet. Provide sealed safety glass window barrier between interior working and fixture spaces, and access for tube replacement exterior to hood interior working area.

2.2.2.6 Service Fixtures

Provide remote controls for piped services and locate on hood exterior frame. Provide serrated supply ends with nozzles arranged close to sash, precluding the need of reaching to interior back of hood to make connections to outlets. Base metal of fixtures shall be brass. Protect metal fixtures inside hood with chemical resistant coating of clear plastic over polished chrome plate.

a. Vacuum: Provide fixtures for service, each fitting with remote controlled valve and supply end (inside hood) consisting of a serrated hose nozzle and escutcheon trim. Provide vacuum at 30 inches of HG.

b. Electrical convenience outlets: Two duplex, grounded, three-wire, 125 volt, 60 Hz, single phase and one 240 volt single phase, 20 ampere. Locate in recessed area of base cabinet or on side posts of hood. Provide stainless steel or chrome-plated cover plate. Provide 15 ampere circuit breaker protection.

2.2.2.7 Blower Switch

Single-pole, 115-volt, 60-Hz, with pilot light. Locate switch in hood frame or in recess of base cabinet.

2.2.2.8 Duct Stub

Collar size suitable for ductwork indicated. Finish of areas that may come in direct contact with fumes shall be same material and finish as hood interior.

PART 3 EXECUTION

3.1 INSTALLATION

Install units at locations indicated. Conform to installation provisions of Section 12350A LAB CASEWORK; and utility installation provisions of Divisions 15 MECHANICAL and 16 ELECTRICAL of this specification, and the ACGIH 2080 including provision for an adequate supply of tempered make-up air to meet the air flow requirements of fume hood(s). Provide interlocks for controls and alarms to maintain the required air balance between hood interiors and the room.

3.2 FIELD QUALITY CONTROL

3.2.1 Inspection

Examine each unit for visual defects, operation and conformance to specifications.

3.2.2 Tests

Test each unit to ensure that the equipment is operational and conforms to

specification requirements. Field tests for fume hood operation and performance shall meet the requirements of ACGIH 2080.

-- End of Section --

SECTION TABLE OF CONTENTS

DIVISION 12 - FURNISHINGS

SECTION 12350A

LAB CASEWORK

04/99

PART 1 GENERAL

1.1 REFERENCES
1.2 SUBMITTALS
1.3 DELIVERY AND STORAGE

PART 2 PRODUCTS

2.1 CASEWORK
2.1.1 Counter tops

PART 3 EXECUTION

3.1 INSTALLATION
3.2 CLEANING

-- End of Section Table of Contents --

SECTION 12350A

LAB CASEWORK
04/99

PART 1 GENERAL

1.1 REFERENCES

The publications listed below form a part of this specification to the extent referenced. The publications are referred to in the text by basic designation only.

AMERICAN SOCIETY FOR TESTING AND MATERIALS (ASTM)

ASTM C 920 (1998) Elastomeric Joint Sealants

1.2 SUBMITTALS

Government approval is required for submittals with a "G" designation; submittals not having a "G" designation are for information only. When used, a designation following the "G" designation identifies the office that will review the submittal for the Government. The following shall be submitted in accordance with Section 01330 SUBMITTAL PROCEDURES:

SD-02 Shop Drawings

Approved Detail Drawings; G-AE

Drawings showing each type of cabinet and related item. The drawings shall clearly indicate the complete plan and elevations of the cabinets and accessories and pertinent details of construction, fabrication, and attachments.

SD-03 Product Data

Casework; G-AE

Manufacturer's printed data, catalog cuts, and instructions for installation and cleaning.

SD-04 Samples

Casework; G-AE

In lieu of individual samples, complete minimum size casework may be furnished as samples. Mock-up units are not acceptable. Samples shall be of sufficient size to show color, pattern, and method of assembly.

a. Countertop and backsplash - One section, containing both.

b. Door and drawer front - One of each, with hardware mounted.

c. Wood finish samples shall be approximately 2 x 3 inch size.

SD-07 Certificates

Casework;

Certificates attesting that the casework meets the requirements specified.

1.3 DELIVERY AND STORAGE

Casework shall be delivered to the jobsite wrapped in a protective covering. Casework shall be stored in an adequately ventilated, dry location that is free of dust, water, or other contaminates and in a manner to permit access for inspection and handling. Casework shall be handled carefully to prevent damage to the surfaces. Damaged items that cannot be restored to like-new condition shall be replaced.

PART 2 PRODUCTS

2.1 CASEWORK

Laboratory casework shall be air and kiln dried hardwood red oak. All exterior surfaces exposed to view after installation shall be red oak. Solid wood used for surfaces exposed to view shall be clear, with color and graining in conformance with normally accepted industry standards. Base cabinets shall have a full horizontal frame construction. All casework shall be assembled with glued, blind mortise and tenson joints, ann further secured with countersunk screws. A manufacturre's standard muti-stage finish shall be acid, alkalai, solvent, water, and abrasion resistant.

2.1.1 Counter tops

Counter tops shall be black 1 1/4 inch modified epoxy resin.

PART 3 EXECUTION

3.1 INSTALLATION

Casework shall be located as indicated. The installation of the casework shall not damage the work of other trades. The casework shall be secured in place in true alignment, level, and plumb. Units shall be secured with screws through backs to cleats that have been anchored to building structure with toggle or expansion bolts. Wall-hung cabinets shall be installed to support the weight of the cabinets plus the normally expected weight of the contents of the cabinets. Fasteners shall be spaced 12 inches on center using at least three bolts in each 3 foot or 4 foot unit width. Adjoining cabinets in an assembly shall be joined together at top and bottom with inconspicuous bolts or clips. Cabinets shall be bolted to bases at cabinet corners. Metal bases shall be faced with resilient material similar to the base provided for the space adjacent to the cabinets. Where base cabinets and counters are removable, wall anchors shall be readily accessible. Joints between the casework and wall surfaces which are not larger than the joints between casework sections shall be sealed flush with sealant conforming to ASTM C 920, Type M, Grade NS, Class 25, Use NT. Larger joints shall be closed with filler strips of the same material and finish as adjacent casework. Filler strips shall be cut to the contour of the wall surface and secured to the casework with concealed nails or screws. Width of filler strips shall not exceed 6 inches in width. Metal cabinets in rooms having terrazzo or ceramic-tile floors shall be set on concrete or masonry bases with exposed faces finished the same as other bases in the room. Height of counter tops shall be as indicated on the drawings. Where required, toe space at front of cabinets shall be provided by installing front face of cabinets 3 inches in front of face of base. Where toe space is not required, face of base and cabinets shall be flush. Bases shall have a height of approximately 4 inches. All items shall be installed as required for proper operation in accordance with the manufacturer's directions.

3.2 CLEANING

Cabinets and countertops shall be cleaned in accordance with manufacturer's instructions.

-- End of Section --

SECTION TABLE OF CONTENTS

DIVISION 12 - FURNISHINGS

SECTION 12490A

WINDOW TREATMENT

01/98

PART 1 WORK DESCRIPTION

1.1 REFERENCES
1.2 SUBMITTALS
1.3 GENERAL
1.4 DELIVERY, STORAGE, AND HANDLING
1.5 FIELD MEASUREMENTS
1.6 WARRANTY

PART 2 PRODUCTS

2.1 WINDOW BLINDS
2.1.1 Horizontal Blinds
2.1.1.1 Head Channel and Slats
2.1.1.2 Controls
2.1.1.3 Intermediate Brackets
2.1.1.4 Hold-Down Brackets
2.2 COLOR

PART 3 EXECUTION

3.1 WINDOW TREATMENT PLACEMENT SCHEDULE
3.2 INSTALLATION

-- End of Section Table of Contents --

SECTION 12490A

WINDOW TREATMENT
01/98

PART 1 WORK DESCRIPTION

1.1 REFERENCES

The publications listed below form a part of this specification to the extent referenced. The publications are referred to in the text by basic designation only.

FEDERAL SPECIFICATIONS (FS)

FS AA-V-00200 (Rev B) Venetian Blinds

1.2 SUBMITTALS

Government approval is required for submittals with a "G" designation; submittals not having a "G" designation are for information only. When used, a designation following the "G" designation identifies the office that will review the submittal for the Government. The following shall be submitted in accordance with Section 01330 SUBMITTAL PROCEDURES:

SD-02 Shop Drawings

Approved Detail Drawings; G-RE

Drawings showing fabrication and installation details. Drawings shall show mounting heights and details.

SD-03 Product Data

Window Treatments; G-AE

Manufacturer's data composed of catalog cuts, brochures, product information, and maintenance instructions.

SD-04 Samples

Window Treatments; G-AE

Three samples of each type and color of window treatment. Blind slats shall be 6 inches in length for each color.

1.3 GENERAL

Window treatment shall be provided, complete with necessary brackets, fittings, and hardware. Each window treatment type shall be a complete unit provided in accordance with paragraph WINDOW TREATMENT PLACEMENT SCHEDULE. Equipment shall be mounted and operated as indicated. Windows to receive a treatment shall be completely covered. The Contractor shall take measurements at the building and shall be responsible for the proper fitting and hanging of the equipment.

1.4 DELIVERY, STORAGE, AND HANDLING

Components shall be delivered to the jobsite in the manufacturer's original packaging with the brand or company name, item identification, and project reference clearly marked. Components shall be stored in a dry location that is

adequately ventilated and free from dust, water, or other contaminants and shall have easy access for inspection and handling. Materials shall be stored flat in a clean dry area with temperature maintained above 50 degrees F.

1.5 FIELD MEASUREMENTS

The Contractor shall become familiar with details of the work, verify dimensions in the field, and shall advise the Contracting Officer of any discrepancy before performing the work.

1.6 WARRANTY

Manufacturer's standard performance guarantees or warranties that extend beyond a 1 year period shall be provided.

PART 2 PRODUCTS

2.1 WINDOW BLINDS

Each blind, including hardware, accessory items, mounting brackets and fastenings, shall be provided as a complete unit produced by one manufacturer. All parts shall be one color unless otherwise shown, and match the color of the blind slat. Steel features shall be treated for corrosion resistance.

2.1.1 Horizontal Blinds

Horizontal blinds shall conform to FS AA-V-00200, Type II (1 inch slats) except as modified below. Blind units shall be capable of nominally 180 degree partial tilting operation and full-height raising. Blinds shall be inside mount.

2.1.1.1 Head Channel and Slats

Head channel shall be steel or aluminum nominal 0.024 for Type II. Slats shall be aluminum, not less than 0.007 inch thick, and of sufficient strength to prevent sag or bow in the finished blind. A sufficient amount of slats shall be provided to assure proper control, uniform spacing, and adequate overlap.

2.1.1.2 Controls

The slats shall be tilted by a transparent tilting wand, hung vertically by its own weight, and shall swivel for easy operation. The tilter control shall be of enclosed construction. Moving parts and mechanical drive shall be made of compatible materials which do not require lubrication during normal expected life. The tilter shall tilt the slats to any desired angle and hold them at that angle so that any vibration or movement of ladders and slats will not drive the tilter and change the angle of slats. A mechanism shall be included to prevent over tightening. The wand shall be of sufficient length to reach to within 5 feet of the floor.

2.1.1.3 Intermediate Brackets

Intermediate brackets shall be provided for installation of blinds over 48 inches wide and shall be installed as recommended by the manufacturer.

2.1.1.4 Hold-Down Brackets

Universal type hold-down brackets for sill or jamb mount shall be provided.

2.2 COLOR

Color shall be in accordance with Section 09915 COLOR SCHEDULE.

PART 3 EXECUTION

3.1 WINDOW TREATMENT PLACEMENT SCHEDULE

Window covering shall be provided
at all exterior windows of the OPS building only.

3.2 INSTALLATION

Installation shall be in accordance with the approved detail drawings and manufacturer's installation instructions. Units shall be level, plumb, secure, and at proper height and location relative to window units. The Contractor shall furnish and install supplementary or miscellaneous items in total, including clips, brackets, or anchorages incidental to or necessary for a sound, secure, and complete installation. Installation shall not be initiated until completion of room painting and finishing operations. Upon completion of the installation, window treatments shall be adjusted for form and appearance, shall be in proper operating condition, and shall be free from damage or blemishes. Damaged units shall be repaired or replaced by the Contractor as directed by the Contracting Officer.

-- End of Section --

SECTION TABLE OF CONTENTS

DIVISION 13 - SPECIAL CONSTRUCTION

SECTION 13080

FORCE PROTECTION FOR MISCELLANEOUS EQUIPMENT

04/99

PART 1 GENERAL

1.1 REFERENCES
1.2 SYSTEM DESCRIPTION
1.2.1 General Requirements

PART 2 PRODUCTS

2.1 BOLTS AND NUTS
2.2 SWAY BRACING

PART 3 EXECUTION

3.1 BRACING
3.2 SWAY BRACES FOR PIPING
3.2.1 Longitudinal Sway Bracing
3.2.2 Anchor Rods, Angles, and Bars
3.2.3 Maximum Length for Anchor Braces
3.2.4 Bolts
3.3 EQUIPMENT SWAY BRACING
3.3.1 Suspended Equipment and Light Fixtures

-- End of Section Table of Contents --

SECTION 13080

FORCE PROTECTION FOR MISCELLANEOUS EQUIPMENT
04/99

PART 1 GENERAL

1.1 REFERENCES

The publications listed below form a part of this specification to the extent referenced. The publications are referred to in the text by basic designation only.

AMERICAN SOCIETY FOR TESTING AND MATERIALS (ASTM)

ASTM A 36/A 36M	(2001) Carbon Structural Steel
ASTM A 53	(1999) Pipe, Steel, Black and Hot-Dipped, Zinc-Coated, Welded and Seamless
ASTM A 307	(2000) Carbon Steel Bolts and Studs, 60 000 PSI Tensile Strength
ASTM A 325	(2000) Structural Bolts, Steel, Heat Treated, 120/105 ksi Minimum Tensile Strength
ASTM A 500	(1999) Cold-Formed Welded and Seamless Carbon Steel Structural Tubing in Rounds and Shapes
ASTM A 563	(1997) Carbon and Alloy Steel Nuts
ASTM A 572/A 572M	(2000a) High-Strength Low-Alloy Columbium-Vanadium Structural Steel
ASTM A 603	(1998) Zinc-Coated Steel Structural Wire Rope
ASTM A 653/A 653M	(2000) Steel Sheet, Zinc-Coated (Galvanized) or Zinc-Iron Alloy-Coated (Galvannealed) by the Hot-Dip Process

ASME INTERNATIONAL (ASME)

ASME B18.2.1	(1996) Square and Hex Bolts and Screws (Inch Series)
ASME B18.2.2	(1987; R 1999) Square and Hex Nuts (Inch Series)

U.S. ARMY CORPS OF ENGINEERS (USACE)

TI 809-04	(1998) Seismic Design for Buildings

1.2 SYSTEM DESCRIPTION

1.2.1 General Requirements

Force protection is required for all suspended ceilings, overhead mounted architectural features, overhead utilities and suspended equipment. All such systems shall be mounted such that they resist a horizontal force equal to 0.5 time the component weight and a vertical downward force equal to 1.5 times the component weight. Force protection is not required for equipment mounted at or

below grade or on walls. Force protection shall be accomplished by providing bracing and suspension which conforms to minimum seismic bracing requirements. The requirements for force protection measures described in this section shall be applied to the mechanical equipment and systems outlined in Section 15070A FORCE PROTECTION FOR MECHANICAL EQUIPMENT, the electrical equipment and systems outlined in Section 16070A FORCE PROTECTION FOR ELECTRICAL EQUIPMENT, and the miscellaneous equipment and systems listed below. Force protection requirements shall be in accordance with the methods and procedures for seismic design in TI 809-04, and shall be provided in addition to any other requirements called for in other sections of these specifications. Resistance to lateral forces shall be accomplished without consideration of friction resulting from gravity loads.

PART 2 PRODUCTS

2.1 BOLTS AND NUTS

Squarehead and hexhead bolts, and heavy hexagon nuts, ASME B18.2.1, ASME B18.2.2, ASTM A 307 for bolts and ASTM A 563 for nuts, or ASTM A 325 for bolts and nuts.

2.2 SWAY BRACING

Material used for members listed in this section and on the drawings, shall be structural steel conforming with the following:

a. Plates, rods, and rolled shapes, ASTM A 36/A 36M or ASTM A 572/A 572M, Grade 503.

b. Wire rope, ASTM A 603.

c. Tubes, ASTM A 500, Grade B.

d. Pipes, ASTM A 53, Type E or S, Grade B.

e. Light gauge angles, less than 1/4 inch thickness, ASTM A 653/A 653M.

PART 3 EXECUTION

3.1 BRACING

Bracing shall conform to the arrangements shown. Trapeze-type hanger shall be secured with not less than two 1/2 inch bolts.

3.2 SWAY BRACES FOR PIPING

Transverse sway bracing for steel and copper pipe shall be provided at intervals not to exceed those shown on the drawings. Transverse sway bracing for pipes of materials other than steel and copper shall be provided at intervals not to exceed the hanger spacing as specified in Section 15400 PLUMBING, GENERAL PURPOSE. Bracing shall consist of at least one vertical angle 2 x 2 x 16 gauge and one diagonal angle of the same size.

3.2.1 Longitudinal Sway Bracing

Longitudinal sway bracing shall be provided in accordance with Section 15070A FORCE PROTECTION FOR MECHANICAL EQUIPMENT.

3.2.2 Anchor Rods, Angles, and Bars

Anchor rods, angles, and bars shall be bolted to either pipe clamps or pipe flanges at one end and cast-in-place concrete or masonry insert or clip angles bolted to the steel structure on the other end. Rods shall be solid metal or

pipe as specified below. Anchor rods, angles, and bars shall not exceed lengths given in the tabulation below.

3.2.3 Maximum Length for Anchor Braces

Type	Size (Inches)	Maximum Length (Feet/Inches)
Angles	1-1/2 x 1-1/2 x 1/4	4-10
	2 x 2 x 1/4	6-6
	2-1/2 x 1-1/2 x 1/4	8-0
	3 x 2-1/2 x 1/4	8-10
	3 x 3 x 1/4	9-10
Rods	3/4	3-1
	7/8	3-8
Flat Bars	1-1/2 x 1/4	1-2
	2 x 1/4	1-2
	2 x 3/8	1-9
Pipes (40S)	1	7-0
	1-1/4	9-0
	1-1/2	10-4
	2	13-1

3.2.4 Bolts

Bolts used for attachment of anchors to pipe and structure shall be not less than 1/2 inch diameter.

3.3 EQUIPMENT SWAY BRACING

3.3.1 Suspended Equipment and Light Fixtures

Equipment sway bracing shall be provided for items supported from overhead floor or roof structural systems, including light fixtures. Braces shall consist of angles, rods, wire rope, bars, or pipes arranged as shown and secured at both ends with not less than 1/2 inch bolts. Sufficient braces shall be provided for equipment to resist a horizontal force equal to 0.5 times the weight of equipment and a vertical downward force equal to 1.5 times the weight of the equipment without exceeding safe working stress of bracing components. Details of equipment bracing shall be submitted for acceptance. In lieu of bracing with vertical supports, these items may be supported with hangers inclined at 45 degrees directed up and radially away from equipment and oriented symmetrically in 90-degree intervals on the horizontal plane, bisecting the angles of each corner of the equipment, provided that supporting members are properly sized to support operating weight of equipment when hangers are inclined at a 45-degree angle.

-- End of Section --

SECTION TABLE OF CONTENTS

DIVISION 13 - SPECIAL CONSTRUCTION

SECTION 13100A

LIGHTNING PROTECTION SYSTEM

09/98

PART 1 GENERAL

1.1 REFERENCES
1.2 GENERAL REQUIREMENTS
1.2.1 Verification of Dimensions
1.2.2 System Requirements
1.3 SUBMITTALS

PART 2 PRODUCTS

2.1 MATERIALS
2.1.1 General Requirements
2.1.2 Main and Secondary Conductors
2.1.2.1 Copper
2.1.2.2 Aluminum
2.1.3 Air Terminals
2.1.4 Ground Rods
2.1.5 Connectors
2.1.6 Lightning Protection Components

PART 3 EXECUTION

3.1 INTEGRAL SYSTEM
3.1.1 General Requirements
3.1.1.1 Air Terminals
3.1.1.2 Roof Conductors
3.1.1.3 Down Conductors
3.1.1.4 Interconnection of Metallic Parts
3.1.1.5 Ground Connections
3.1.1.6 Grounding Electrodes
3.1.2 Metal Roofs
3.1.3 Steel Frame Building
3.2 INTERCONNECTION OF METAL BODIES
3.3 FENCES
3.4 INSPECTION

-- End of Section Table of Contents --

SECTION 13100A

LIGHTNING PROTECTION SYSTEM
09/98

PART 1 GENERAL

1.1 REFERENCES

The publications listed below form a part of this specification to the extent referenced. The publications are referred to in the text by basic designation only.

AMERICAN NATIONAL STANDARDS INSTITUTE (ANSI)

ANSI C135.30	(1988) Zinc-Coated Ferrous Ground Rods for Overhead or Underground Line Construction

NATIONAL FIRE PROTECTION ASSOCIATION (NFPA)

NFPA 70	(2002) National Electrical Code
NFPA 780	(2000) Installation of Lightning Protection Systems

UNDERWRITERS LABORATORIES (UL)

UL 96	(1994; Rev thru Dec 1996) Lightning Protection Components
UL 96A	(1994) Installation Requirements for Lightning Protection Systems
UL 467	(1993; Rev thru Aug 1996) Grounding and Bonding Equipment
UL Elec Const Dir	(1997) Electrical Construction Materials Directory

1.2 GENERAL REQUIREMENTS

1.2.1 Verification of Dimensions

The Contractor shall become familiar with all details of the work, verify all dimensions in the field, and shall advise the Contracting Officer of any discrepancy before performing the work. No departures shall be made without the prior approval of the Contracting Officer.

1.2.2 System Requirements

The system furnished under this specification shall consist of the standard products of a manufacturer regularly engaged in the production of lightning protection systems and shall be the manufacturer's latest UL approved design. The lightning protection system shall conform to NFPA 70 and NFPA 780, UL 96 and UL 96A, except where requirements in excess thereof are specified herein.

1.3 SUBMITTALS

Government approval is required for submittals with a "G" designation; submittals not having a "G" designation are for information only. When used, a

designation following the "G" designation identifies the office that will review the submittal for the Government. The following shall be submitted in accordance with Section 01330 SUBMITTAL PROCEDURES:

SD-02 Shop Drawings

Drawings; G-AE

Detail drawings consisting of a complete list of material, including manufacturer's descriptive and technical literature, catalog cuts, drawings, and installation instructions. Detail drawings shall demonstrate that the system has been coordinated and will function as a unit. Drawings shall show proposed layout and mounting and relationship to other parts of the work.

SD-07 Certificates

Materials; G-RE

Where material or equipment is specified to comply with requirements of UL, proof of such compliance. The label of or listing in UL Elec Const Dir will be acceptable evidence. In lieu of the label or listing, a written certificate from an approved nationally recognized testing organization equipped to perform such services, stating that the items have been tested and conform to the requirements and testing methods of Underwriters Laboratories may be submitted. A letter of findings shall be submitted certifying UL inspection of lightning protection systems provided on the following facilities: POL OPS Building, Filter Bldg., & Pump House/Tank.

PART 2 PRODUCTS

2.1 MATERIALS

2.1.1 General Requirements

No combination of materials shall be used that form an electrolytic couple of such nature that corrosion is accelerated in the presence of moisture unless moisture is permanently excluded from the junction of such metals. Where unusual conditions exist which would cause corrosion of conductors, conductors with protective coatings or oversize conductors shall be used. Where a mechanical hazard is involved, the conductor size shall be increased to compensate for the hazard or the conductors shall be protected by covering them with molding or tubing made of wood or nonmagnetic material. When metallic conduit or tubing is used, the conductor shall be electrically connected at the upper and lower ends.

2.1.2 Main and Secondary Conductors

Conductors shall be in accordance with NFPA 780 and UL 96 for Class I, Class II, or Class II modified materials as applicable.

2.1.2.1 Copper

Counterpoise shall be copper conductors not smaller than No. 1/0 AWG.

2.1.2.2 Aluminum

Aluminum shall not contact the earth nor shall it be used in any other manner that will contribute to rapid deterioration of the metal. Appropriate precautions shall be observed at connections with dissimilar metals. Aluminum conductors for bonding and interconnecting metallic bodies to the main cable shall be at least equivalent to strength and cross-sectional area of a No. 4 AWG

aluminum wire. When perforated strips are provided, strips that are much wider than solid strips shall be. A strip width that is at least twice that of the diameter of the perforations shall be used. Aluminum strip for connecting exposed water pipes shall be not less than No. 12 AWG in thickness and at least 1-1/2 inches wide.

2.1.3 Air Terminals

Terminals shall be in accordance with UL 96 and NFPA 780. The tip of air terminals on buildings used for manufacturing, processing, handling, or storing explosives, ammunition, or explosive ingredients shall be a minimum of 2 feet above the ridge parapet, ventilator or perimeter. On open or hooded vents emitting explosive dusts or vapors under natural or forced draft, air terminals shall be a minimum of 5 feet above the opening. On open stacks emitting explosive dusts, gases, or vapor under forced draft, air terminals shall extend a minimum of 15 feet above vent opening. Air terminals more than 24 inches in length shall be supported by a suitable brace, with guides not less than one-half the height of the terminal.

2.1.4 Ground Rods

Rods made of copper-clad steel shall conform to UL 467 and galvanized ferrous rods shall conform to ANSI C135.30. Ground rods shall be not less than 3/4 inch in diameter and 10 feet in length. Ground rods of copper-clad steel, stainless steel, galvanized ferrous, and solid copper shall not be mixed on the job.

2.1.5 Connectors

Clamp-type connectors for splicing conductors shall conform to UL 96, class as applicable, and, Class 2, style and size as required for the installation. Clamp-type connectors shall only be used for the connection of the roof conductor to the air terminal and to the guttering. All other connections, bonds, and splices shall be done by exothermic welds or by high compression fittings. The exothermic welds and high compression fittings shall be listed for the purpose. The high compression fittings shall be the type which require a hydraulically operated mechanism to apply a minimum of 10,000 psi.

2.1.6 Lightning Protection Components

Lightning protection components, such as bonding plates, air terminal supports, chimney bands, clips, and fasteners shall conform to UL 96, classes as applicable.

PART 3 EXECUTION

3.1 INTEGRAL SYSTEM

3.1.1 General Requirements

The lightning protection system shall consist of air terminals, roof conductors, down conductors, ground connections, and grounds, electrically interconnected to form the shortest distance to ground. All conductors on the structures shall be exposed except where conductors are in protective sleeves exposed on the outside walls. Secondary conductors shall interconnect with grounded metallic parts within the building. Interconnections made within side-flash distances shall be at or above the level of the grounded metallic parts.

3.1.1.1 Air Terminals

Air terminal design and support shall be in accordance with NFPA 780. Terminals shall be rigidly connected to, and made electrically continuous with, roof conductors by means of pressure connectors or crimped joints of T-shaped

malleable metal and connected to the air terminal by a dowel or threaded fitting. Air terminals at the ends of the structure shall be set not more than 2 feet from the ends of the ridge or edges and corners of roofs. Spacing of air terminals 2 feet in height on ridges, parapets, and around the perimeter of buildings with flat roofs shall not exceed 25 feet. In specific instances where it is necessary to exceed this spacing, the specified height of air terminals shall be increased not less than 2 inches for each foot of increase over 25 feet.

On large, flat or gently sloping roofs, as defined in NFPA 780, air terminals shall be placed at points of the intersection of imaginary lines dividing the surface into rectangles having sides not exceeding 50 feet in length. Air terminals shall be secured against overturning either by attachment to the object to be protected or by means of a substantial tripod or other braces permanently and rigidly attached to the building or structure. Metal projections and metal parts of buildings, smokestacks, and other metal objects that do not contain hazardous materials and that may be struck but not appreciably damaged by lightning, need not be provided with air terminals. However, these metal objects shall be bonded to the lightning conductor through a metal conductor of the same unit weight per length as the main conductor. Where metal ventilators are installed, air terminals shall be mounted thereon, where practicable. Any air terminal erected by necessity adjacent to a metal ventilator shall be bonded to the ventilator near the top and bottom. Where metal ventilators are installed with air terminals mounted thereon, the air terminal shall not be more than 24 inches away from the farther edge or corner. If the air terminal is farther than this distance, an additional air terminal shall be added in order to meet this requirement. Where metal ventilators are installed with air terminals mounted adjacent, the air terminal shall not be more than 24 inches away from the farther edge or corner. If the air terminal is farther than this distance, an additional air terminal shall be added in order to meet this requirement.

3.1.1.2 Roof Conductors

Roof conductors shall be connected directly to the roof or ridge roll. Sharp bends or turns in conductors shall be avoided. Necessary turns shall have a radius of not less than 8 inches. Conductors shall preserve a downward or horizontal course and shall be rigidly fastened every 3 feet along the roof and down the building to ground. Metal ventilators shall be rigidly connected to the roof conductor at three places. All connections shall be electrically continuous. Roof conductors shall be coursed along the contours of flat roofs, ridges, parapets, and edges; and where necessary, over flat surfaces, in such a way as to join each air terminal to all the rest. Roof conductors surrounding tank tops, decks, flat surfaces, and flat roofs shall be connected to form a closed loop.

3.1.1.3 Down Conductors

Down conductors shall be electrically continuous from air terminals and roof conductors to grounding electrodes. Down conductors shall be coursed over extreme outer portions of the building, such as corners, with consideration given to the location of ground connections and air terminals. Each building or structure shall have not less than two down conductors located as widely separated as practicable, at diagonally opposite corners. On rectangular structures having gable, hip, or gambrel roofs more than 110 feet long, there shall be at least one additional down conductor for each additional 50 feet of length or fraction thereof. On rectangular structures having French, flat, or sawtooth roofs exceeding 250 feet in perimeter, there shall be at least one additional down conductor for each 100 feet of perimeter or fraction thereof. On irregularly shaped structures, the total number of down conductors shall be sufficient to make the average distance between them along the perimeter not greater than 100 feet. On structures exceeding 50 feet in height, there shall be at least one additional down conductor for each additional 60 feet of height or fraction thereof, except that this application shall not cause down conductors to be placed about the perimeter of the structure at intervals of

less than 50 feet. Additional down conductors shall be installed when necessary to avoid "dead ends" or branch conductors ending at air terminals, except where the air terminal is on a roof below the main protected level and the "dead end" or branch conductor is less than 16 feet in length and maintains a horizontal or downward coursing. Down conductors shall be equally and symmetrically spaced about the perimeter of the structure. Down conductors shall be protected by placing in pvc conduit for a minimum distance of above finished grade level. .

3.1.1.4 Interconnection of Metallic Parts

Metal doors, windows, and gutters shall be connected directly to the grounds or down conductors using not smaller than No. 6 copper conductor, or equivalent. Conductors placed where there is probability of unusual wear, mechanical injury, or corrosion shall be of greater electrical capacity than would normally be used, or shall be protected. The ground connection to metal doors and windows shall be by means of mechanical ties under pressure, or equivalent.

3.1.1.5 Ground Connections

Ground connections comprising continuations of down conductors from the structure to the grounding electrode shall securely connect the down conductor and ground in a manner to ensure electrical continuity between the two. All connections shall be of the clamp type. There shall be a ground connection for each down conductor. Metal water pipes and other large underground metallic objects shall be bonded together with all grounding mediums. Ground connections shall be protected from mechanical injury. In making ground connections, advantage shall be taken of all permanently moist places where practicable, although such places shall be avoided if the area is wet with waste water that contains chemical substances, especially those corrosive to metal.

3.1.1.6 Grounding Electrodes

A grounding electrode shall be provided for each down conductor located as shown. A driven ground shall extend into the earth for a distance of not less than 10 feet. Ground rods shall be set not less than 3 feet, nor more than 8 feet, from the structures foundation. The complete installation shall have a total resistance to ground of not more than 25 ohms if a counterpoise is not used. Ground rods shall be tested individually prior to connection to the system and the system as a whole shall be tested not less than 48 hours after rainfall. When the resistance of the complete installation exceeds the specified value or two ground rods individually exceed 25 ohms, the Contracting Officer shall be notified immediately. A counterpoise, where required, shall be of No. 1/0 copper cable or equivalent material having suitable resistance to corrosion and shall be laid around the perimeter of the structure in a trench not less than 2 feet deep at a distance not less than 3 feet nor more than 8 feet from the nearest point of the structure. All connections between ground connectors and grounds or counterpoise, and between counterpoise and grounds shall be electrically continuous..

3.1.2 Metal Roofs

Wood-Frame, Wall-Bearing Masonry or Tile Structure with Metallic Roof and Nonmetallic Exterior Walls, or Reinforced Concrete Building with Metallic Roof: Metal roofs which are in the form of sections insulated from each other shall be made electrically continuous by bonding. Air terminals shall be connected to, and made electrically continuous with, the metal roof as well as the roof conductors and down conductors. Ridge cables and roof conductors shall be bonded to the roof at the upper and lower edges of the roof and at intervals not to exceed 100 feet. The down conductors shall be bonded to roof conductors and to the lower edge of the metal roof. Where the metal of the roof is in small sections, the air terminals and down conductors shall have connections made to at least four of the sections. All connections shall have electrical continuity and have a surface contact of at least 3 square inches.

3.1.3 Steel Frame Building

The steel framework shall be made electrically continuous. Electrical continuity may be provided by bolting, riveting, or welding steel frame, unless a specific method is noted on the drawings. The air terminals shall be connected to the structural steel framework at the ridge. Short runs of conductors shall be used as necessary to join air terminals to the metal framework so that proper placing of air terminals is maintained. Separate down conductors from air terminals to ground connections are not required. Where a grounded metal pipe water system enters the building, the structural steel framework and the water system shall be connected at the point of entrance by a ground connector. Connections to pipes shall be by means of ground clamps with lugs. Connections to structural framework shall be by means of nut and bolt or welding. All connections between columns and ground connections shall be made at the bottom of the steel columns. Ground connections to grounding electrons or counterpoise shall be run from not less than one-half of all the columns distributed equally around the perimeter of the structure at intervals averaging not more than 60 feet.

3.2 INTERCONNECTION OF METAL BODIES

Metal bodies of conductance shall be protected if not within the zone of protection of an air terminal. Metal bodies of conductance having an area of 400 square inches or greater or a volume of 1000 cubic inches or greater shall be bonded to the lightning protection system using main size conductors and a bonding plate having a surface contact area of not less than 3 square inches. Provisions shall be made to guard against the corrosive effect of bonding dissimilar metals. Metal bodies of inductance shall be bonded at their closest point to the lightning protection system using secondary bonding conductors and fittings. A metal body that exceeds 5 feet in any dimension, that is situated wholly within a building, and that does not at any point come within 6 feet of a lightning conductor or metal connected thereto shall be independently grounded.

3.3 FENCES

Except as indicated below, metal fences that are electrically continuous with metal posts extending at least 2 feet into the ground require no additional grounding. Other fences shall be grounded on each side of every gate. Fences shall be grounded by means of ground rods every 1000 to 1500 feet of length when fences are located in isolated places, and every 500 to 750 feet when in proximity (100 feet or less) to public roads, highways, and buildings. The connection to ground shall be made from the post where it is of metal and is electrically continuous with the fencing. All metal fences shall be grounded at or near points crossed by overhead lines in excess of 600 volts and at distances not exceeding 150 feet on each side of line crossings.

3.4 INSPECTION

The lightning protection system will be inspected by the Contracting Officer to determine conformance with the requirements of this specification. No part of the system shall be concealed until so authorized by the Contracting Officer.

-- End of Section --

SECTION TABLE OF CONTENTS

DIVISION 13 - SPECIAL CONSTRUCTION

SECTION 13110A

CATHODIC PROTECTION SYSTEM (SACRIFICIAL ANODE)

11/98

PART 1 GENERAL

1.1 REFERENCES
1.2 SUBMITTALS
1.3 GENERAL REQUIREMENTS
1.3.1 Services of "Corrosion Expert"
1.3.2 Contractor's Modifications
1.3.3 Isolators
1.3.4 Anode and Bond Wires
1.3.5 Summary of Services Required
1.3.6 Nonmetallic Pipe System
1.3.6.1 Coatings
1.3.6.2 Tracer Wire
1.3.7 Tests of Components
1.3.8 Drawings
1.3.9 Electrical Potential Measurements
1.3.10 Achievement of Criteria for Protection
1.3.11 Metallic Components and Typicals
1.3.12 Metallic Component Coating

PART 2 PRODUCTS

2.1 MAGNESIUM ANODES
2.1.1 Anode Composition
2.1.2 Dimensions and Weights
2.1.3 Packaged Anodes
2.1.4 Zinc Anodes
2.1.5 Connecting Wire
2.1.5.1 Wire Requirements
2.1.5.2 Anode Header Cable
2.2 MISCELLANEOUS MATERIALS
2.2.1 Electrical Wire
2.2.1.1 Wire Splicing
2.2.1.2 Test Wires
2.2.1.3 Resistance Wire
2.2.2 Conduit
2.2.3 Test Boxes and Junctions Boxes
2.2.4 Joint, Patch, Seal, and Repair Coating
2.2.5 Backfill Shields
2.2.6 Epoxy Potting Compound
2.2.7 Test Stations
2.2.8 Joint and Continuity Bonds
2.2.9 Resistance Bonds
2.2.10 Stray Current Measurements
2.2.11 Electrical Isolation of Structures
2.2.11.1 Electrically Isolating Pipe Joints
2.2.11.2 Electrically Conductive Couplings
2.2.11.3 Insulating Joint Testing
2.2.12 Underground Structure Coating
2.2.12.1 Field Joints

2.2.12.2 Inspection of Pipe Coatings
2.2.13 Resistance Wire
2.2.14 Electrical Connections
2.2.15 Electrical Tape
2.2.16 Permanent Reference Electrodes
2.2.17 Casing

PART 3 EXECUTION

3.1 CRITERIA OF PROTECTION
3.1.1 Iron and Steel
3.2 ANODE STORAGE AND INSTALLATION
3.2.1 Anode Storage
3.2.2 Anode Installation
3.2.2.1 Single Anodes
3.2.2.2 Groups of Anodes
3.2.2.3 Welding Methods
3.2.3 Anode Placement - General
3.2.4 Underground Pipeline
3.2.5 Installation Details
3.2.6 Lead Wire Connections
3.2.6.1 Underground Pipeline (Metallic)
3.2.6.2 Resistance Wire Splices
3.2.7 Location of Test Stations
3.2.8 Underground Pipe Joint Bonds
3.3 ELECTRICAL ISOLATION OF STRUCTURES
3.3.1 Isolation Joints and Fittings
3.3.2 Gas Distribution Piping
3.4 TRENCHING AND BACKFILLING
3.5 TESTS AND MEASUREMENTS
3.5.1 Baseline Potentials
3.5.2 Isolation Testing
3.5.2.1 Insulation Checker
3.5.2.2 Cathodic Protection Meter
3.5.3 Anode Output
3.5.4 Reference Electrode Potential Measurements
3.5.5 Location of Measurements
3.5.5.1 Piping or Conduit
3.5.5.2 Tanks
3.5.5.3 Casing Tests
3.5.5.4 Interference Testing
3.5.5.5 Holiday Test
3.5.5.6 Recording Measurements
3.6 TRAINING COURSE
3.7 CLEANUP
3.8 MISCELLANEOUS INSTALLATION AND TESTING
3.8.1 Coatings
3.8.2 Excavation
3.9 SPARE PARTS
3.10 SEEDING
3.11 SYSTEM TESTING

-- End of Section Table of Contents --

SECTION 13110A

CATHODIC PROTECTION SYSTEM (SACRIFICIAL ANODE)
11/98

PART 1 GENERAL

1.1 REFERENCES

The publications listed below form a part of this specification to the extent referenced. The publications are referred to in the text by basic designation only.

AMERICAN SOCIETY FOR TESTING AND MATERIALS (ASTM)

ASTM B 418	(1995a) Cast and Wrought Galvanic Zinc Anodes
ASTM B 843	(1993; R 1998) Magnesium Alloy Anodes for Cathodic Protection
ASTM D 1248	(1998) Polyethylene Plastics Molding and Extrusion Materials

NACE INTERNATIONAL (NACE)

NACE RP0169	(1996) Control of External Corrosion on Underground or Submerged Metallic Piping Systems
NACE RP0177	(1995) Mitigation of Alternating Current and Lightning Effects on Metallic Structures and Corrosion Control Systems
NACE RP0188	(1999) Discontinuity (Holiday) Testing of Protective Coatings
NACE RP0190	(1995) External Protective Coatings for Joints, Fittings, and Valves on Metallic Underground or Submerged Pipelines and Piping Systems

NATIONAL ELECTRICAL MANUFACTURERS ASSOCIATION (NEMA)

NEMA TC 2	(1998) Electrical Polyvinyl Chloride (PVC) Tubing (EPT) and Conduit (EPC-40 and EPC-80)
NEMA WC 5	(1992; Rev 2, 1996) Thermoplastic-Insulated Wire and Cable for the Transmission and Distribution of Electrical Energy

NATIONAL FIRE PROTECTION ASSOCIATION (NFPA)

NFPA 70	(2002) National Electrical Code

UNDERWRITERS LABORATORIES (UL)

UL 6	(1997) Rigid Metal Conduit

UL 510	(1994; Rev thru Apr 1998) Polyvinyl Chloride, Polyethylene, and Rubber Insulating Tape
UL 514A	(1996; Rev Dec 1999) Metallic Outlet Boxes

1.2 SUBMITTALS

Government approval is required for submittals with a "G" designation; submittals not having a "G" designation are for information only. When used, a designation following the "G" designation identifies the office that will review the submittal for the Government. The following shall be submitted in accordance with Section 01330 SUBMITTAL PROCEDURES:

SD-02 Shop Drawings

Drawings; G-AE

Six copies of detail drawings consisting of a complete list of equipment and material including manufacturer's descriptive and technical literature, catalog cuts, results of system design calculations including soil-resistivity, installation instructions and certified test data stating the maximum recommended anode current output density and the rate of gaseous production if any at that current density. Detail drawings shall contain complete wiring and schematic diagrams and any other details required to demonstrate that the system has been coordinated and will function properly as a unit.

Contractor's Modifications; G-RE

Six copies of detail drawings showing proposed changes in location, scope of performance indicating any variations from, additions to, or clarifications of contract drawings. The drawings shall show proposed changes in anode arrangement, anode size and number, anode materials and layout details, conduit size, wire size, mounting details, wiring diagram, method for electrically-isolating each pipe, and any other pertinent information to proper installation and performance of the system.

SD-03 Product Data

Equipment; G-RE

Within 30 days after receipt of notice to proceed, an itemized list of equipment and materials including item number, quantity, and manufacturer of each item. The list shall be accompanied by a description of procedures for each type of testing and adjustments, including testing of coating for thickness and holidays. Installation of materials and equipment shall not commence until this submittal is approved.

Spare Parts;

Spare parts data for each different item of material and equipment specified, after approval of detail drawings and not later than six (6) months prior to the date of beneficial occupancy. The data shall include a complete list of parts, special tools, and supplies, with current unit prices and source of supply. One (1) spare anode of each type shall be furnished.

SD-06 Test Reports

Tests and Measurements; G-RE

Test reports in booklet form tabulating all field tests and measurements performed, upon completion and testing of the installed system and including close interval potential survey, casing and interference tests, final system test verifying protection, insulated joint and bond tests, and holiday coating test. A certified test report showing that the connecting method has passed a 120-day laboratory test without failure at the place of connection, wherein the anode is subjected to maximum recommended current output while immersed in a three percent sodium chloride solution.

Contractor's Modifications; G-RE

Final report regarding Contractor's modifications. The report shall include pipe-to-soil measurements throughout the affected area, indicating that the modifications improved the overall conditions, and current measurements for anodes. The following special materials and information are required: taping materials and conductors; zinc grounding cell, installation and testing procedures, and equipment; coating material; system design calculations for anode number, life, and parameters to achieve protective potential; backfill shield material and installation details showing waterproofing; bonding and waterproofing details; insulated resistance wire; exothermic weld equipment and material.

SD-07 Certificates

Cathodic Protection System; G-RE

Proof that the materials and equipment furnished under this section conform to the specified requirements contained in the referenced standards or publications. The label or listing by the specified agency will be acceptable evidence of such compliance.

Services of "Corrosion Expert"; G-RE

Evidence of qualifications of the "corrosion expert."

a. The "corrosion expert's" name and qualifications shall be certified in writing to the Contracting Officer prior to the start of construction.

b. Certification shall be submitted giving the name of the firm, the number of years of experience, and a list of not less than five (5) of the firm's installations three (3) or more years old that have been tested and found satisfactory.

SD-10 Operation and Maintenance Data

Cathodic Protection System;

Before final acceptance of the cathodic protection system, six copies of operating manuals outlining the step-by-step procedures required for system startup, operation, adjustment of current flow, and shutdown. The manuals shall include the manufacturer's name, model number, service manual, parts list, and brief description of all equipment and their basic operating features. Six copies of maintenance manual, listing routine maintenance procedures, recommendation for maintenance testing, possible breakdowns and repairs, and troubleshooting guides. The manuals shall include single-line diagrams for the system as installed; instructions in making pipe-to-reference cell and tank-to-reference cell potential measurements and frequency of monitoring; instructions for dielectric connections, interference and sacrificial anode bonds; instructions shall include precautions to

ensure safe conditions during repair of pipe or other metallic systems. The instructions shall be neatly bound between permanent covers and titled "Operating and Maintenance Instructions." These instructions shall be submitted for the Contracting Officer's approval. The instructions shall include the following:

a. As-built drawings, to scale of the entire system, showing the locations of the piping, location of all anodes and test stations, locations of all insulating joints, and structure-to-reference cell potentials as measured during the tests required by Paragraph: TESTS AND MEASUREMENTS, of this section.

b. Recommendations for maintenance testing, including instructions in making pipe-to-reference cell potential measurements and frequency of testing.

c. All maintenance and operating instructions and nameplate data shall be in English.

d. Instructions shall include precautions to insure safe conditions during repair of pipe system.

Training Course;

The proposed Training Course Curriculum (including topics and dates of discussion) indicating that all of the items contained in the operating and maintenance instructions, as well as demonstrations of routine maintenance operations, including testing procedures included in the maintenance instructions, are to be covered.

1.3 GENERAL REQUIREMENTS

The Contractor shall furnish and install a complete, operating, sacrificial anode cathodic protection system in complete compliance with NFPA 70, with all applicable Federal, State, and local regulations and with minimum requirements of this contract. In addition to the minimum requirements of these specifications, . The services required include planning, installation, adjusting and testing of a cathodic protection system, using sacrificial anodes for cathodic protection of the Water, Fire Protection, Force Main, and Gas lines, their connectors and lines under the slab or floor foundation. The cathodic protection system shall include anodes, cables, connectors, corrosion protection test stations, and any other equipment required for a complete operating system providing the NACE criteria of protection as specified. Insulators are required whenever needed to insulate the pipes from any other structure. Any pipe crossing the hydrant fuel pipe shall have a test station. The cathodic protection shall be provided on Water, Fire Protection, Force Main, and Gas pipes.

1.3.1 Services of "Corrosion Expert"

The Contractor shall obtain the services of a "corrosion expert" to supervise, inspect, and test the installation and performance of the cathodic protection system. "Corrosion expert" refers to a person, who by thorough knowledge of the physical sciences and the principles of engineering and mathematics, acquired by professional education and related practical experience, is qualified to engage in the practice of corrosion control of buried or submerged metallic surfaces. Such a person must be accredited or certified by the National Association of Corrosion Engineers (NACE) as a NACE Accredited Corrosion Specialist or a NACE certified Cathodic Protection (CP) Specialist or be a registered professional engineer who has certification or licensing that includes education and experience in corrosion control of buried or submerged metallic piping and tank systems, if such certification or licensing includes 5 years experience in corrosion control on underground metallic surfaces of the

type under this contract. The "corrosion expert" shall make at least 3 visits to the project site. The first of these visits shall include obtaining soil resistivity data, acknowledging the type of pipeline coatings to be used and reporting to the Contractor the type of cathodic protection required. Once the submittals are approved and the materials delivered, the "corrosion expert" shall revisit the site the ensure the Contractor understands installation practices and laying out the components. The third visit shall involve testing the installed cathodic protection systems and training applicable personnel on proper maintenance techniques. The "corrosion expert" shall supervise installation and testing of all cathodic protection.

1.3.2 Contractor's Modifications

The specified system is based on a complete system with magnesium sacrificial anodes. The Contractor may modify the cathodic protection system after review of the project, site verification, and analysis, if the proposed modifications include the anodes specified and will provide better overall system performance. The modifications shall be fully described, shall be approved by the Contracting Officer's representative, and shall meet the following criteria. The proposed system shall achieve a minimum pipe-to-soil "instant off" potential of minus 850 millivolts with reference to a saturated copper-copper sulfate reference cell on the underground components of the piping or other metallic surface. The Contractor shall take resistivity measurements of the soil in the vicinity of the pipes and ground bed sites. Based upon the measurements taken, the current and voltage shall be required to produce a minimum of minus 850 millivolts "instant off" potential between the structure being tested and the reference cell. This potential shall be obtained over 95 percent of the metallic area. The anode system shall be designed for a life of twenty-five (25) years of continuous operation.

1.3.3 Isolators

Isolators are required to insulate the indicated pipes from any other structure. Isolators shall be provided with lightning protection and a test station as shown.

1.3.4 Anode and Bond Wires

For each cathodic system, the metallic components and structures to be protected shall be made electrically continuous. This shall be accomplished by installing bond wires between the various structures. Bonding of existing buried structures may also be required to preclude detrimental stray current effects and safety hazards. Provisions shall be included to return stray current to its source without damaging structures intercepting the stray current. The electrical isolation of underground facilities in accordance with acceptable industry practice shall be included under this section. All tests shall be witnessed by the Contracting Officer.

1.3.5 Summary of Services Required

The scope of services shall include, but shall not be limited to, the following:

a. Close-interval potential surveys.

b. Cathodic Protection Systems.

c. System testing.

d. Not Used.

e. Interference testing.

f. Training.

g. Operating and maintenance manual.

h. Insulator testing and bonding testing.

i. Coating and holiday testing shall be submitted within 45 days of notice to proceed.

1.3.6 Nonmetallic Pipe System

In the event pipe other than metallic pipe is approved and used in lieu of metallic pipe, all metallic components of this pipe system shall be protected with cathodic protection. Detailed drawings of cathodic protection for each component shall be submitted to the Contracting Officer for approval within 45 days after date of receipt of notice to proceed, and before commencement of any work.

1.3.6.1 Coatings

Coatings for metallic components shall be as required for metallic fittings. Protective covering (coating and taping) shall be completed and tested on each metallic component (such as valves, hydrants and fillings). This covering shall be as required for underground metallic pipe. Each test shall be witnessed by the Contracting Officer. Coatings shall be selected, applied, and inspected in accordance with NACE RP0190 and as specified in these specifications. The use of nonmetallic pipe does not change other requirements of the specifications. Any deviations due to the use of nonmetallic pipe shall be submitted for approval.

1.3.6.2 Tracer Wire

When a nonmetallic pipe line is used to extend or add to an existing metallic line, an insulated No. 8 AWG copper wire shall be thermit-welded to the existing metallic line and run the length of the new nonmetallic line. This wire shall be used as a locator tracer wire and to maintain continuity to any future extensions of the pipe line.

1.3.7 Tests of Components

A minimum of four (4) tests shall be made at each metallic component in the piping system. Two (2) measurements shall be made directly over the anodes and the other two (2) tests shall be over the outer edge of the component, but at the farthest point from the anodes. Structure and pipes shall be shown with the cathodic protection equipment. All components of the cathodic protection system shall be shown on drawings, showing their relationship to the protected structure or component. A narrative shall describe how the cathodic protection system will work and provide testing at each component. Components requiring cathodic protection shall include but not be limited to the following:

a. Pipes under the floor slab or foundations.

b. PIV.

c. Shutoff valves.

d. Metallic pipe extended from aboveground locations.

e. Each connector or change-of-direction device.

f. Any metallic pipe component or section.

g. Backflow preventor.

1.3.8 Drawings

Detailed drawings shall be provided showing location of anodes, insulated fittings, test stations, permanent reference cells, and bonding. Locations shall be referenced to two (2) permanent facilities or mark points.

1.3.9 Electrical Potential Measurements

All potential tests shall be made at a minimum of 10 foot intervals witnessed by the Contracting Officer. Submittals shall identify test locations on separate drawing, showing all metal to be protected and all cathodic protection equipment. Test points equipment and protected metal shall be easily distinguished and identified.

1.3.10 Achievement of Criteria for Protection

All conductors, unless otherwise shown, shall be routed to or through the test stations. Each system provided shall achieve a minimum pipe-to-soil "instant off" potential of minus 850 millivolt potentials with reference to a saturated copper-copper-sulfate reference cell on all underground components of the piping. Based upon the measurements taken, the current and voltage of the anodes should be adjusted as required to produce a minimum of minus 850 millivolts "instant off" potential between the structure being tested and the reference cell. This potential should be obtained over 95 percent of the metallic area. This must be achieved without the "instant off" potential exceeding 1150 millivolts. Testing will be witnessed by the Contracting Officer. Additional anodes shall be provided by the Contractor if required to achieve the minus 850 millivolts "instant off". Although acceptance criteria of the cathodic protection systems are defined in NACE RP0169, for this project the "instant off" potential of minus 850 millivolts is the only acceptable criteria.

1.3.11 Metallic Components and Typicals

a. Metallic components: As a minimum, each metallic component shall be protected with two (2) magnesium anodes. This number of anodes is required to achieve minus 850 millivolts "instant off" potential on the metallic area and at the same time not provide overvoltage above 1150 millivolts "instant off." As a minimum, the magnesium anode unpackaged weight shall be 17 pounds. The magnesium anodes shall be located on each side of the metallic component and routed through a test station.

b. Fire Hydrants: Fire hydrant pipe components shall have a minimum of two (2) anodes. These magnesium anodes shall have an unpackaged weight of 17 pounds.

c. Pipe Under Concrete Slab: Pipe under concrete slab shall have a minimum of 2 magnesium anodes. These magnesium anodes shall have an unpackaged weight of 17 pounds. Pipe under concrete slab shall have 1 permanent reference electrodes located under the slab. One (1) permanent reference electrode shall be located where the pipe enters the concrete slab. All conductors shall be routed to a test station.

d. Valves: Each valve shall be protected with 2 magnesium anodes. The magnesium anode shall have an unpackaged weight of 17 pounds.

e. Metallic Pipe Component or Section: Each section of metallic pipe shall be protected with 2 magnesium anodes. The magnesium anodes shall have an unpackaged weight of 17 pounds.

f. Connectors or Change-of-Direction Devices: Each change-of-direction device shall be protected with 2 magnesium anodes. The magnesium anode shall have an unpackaged weight of 17 pounds.

1.3.12 Metallic Component Coating

Coatings for metallic components shall be as required for metallic fittings as indicated. This will include fire hydrants, T's, elbows, valves, etc. Coatings shall be selected, applied, and inspected in accordance with NACE RP0190 and as specified in these specifications.

PART 2 PRODUCTS

2.1 MAGNESIUM ANODES

A minimum of 4 anodes shall be installed on the Tank system. See Paragraph METALLIC COMPONENTS AND TYPICALS for additional anodes under slab.

2.1.1 Anode Composition

Anodes shall be of high-potential magnesium alloy, made of primary magnesium obtained from sea water or brine, and not made from scrap metal. Magnesium anodes shall conform to ASTM B 843 and to the following analysis (in percents) otherwise indicated:

Aluminum, max.	0.010
Manganese, max.	0.50 to 1.30
Zinc	0.05
Silicon, max.	0.05
Copper, max.	0.02
Nickel, max.	0.001
Iron, Max.	0.03
Other impurities, max.	0.05 each or 0.3 max. total
Magnesium	Remainder

The Contractor shall furnish spectrographic analysis on samples from each heat or batch of anodes used on this project.

2.1.2 Dimensions and Weights

Dimensions and weights of anodes shall be approximately as follows:

TYPICAL MAGNESIUM ANODE SIZE

(Cross sections may be round, square, or D shaped)

NOMINAL WT. LBS.	APPROX. SIZE (IN)	NOMINAL GROSS WT lb PACKAGED IN BACKFILL	NOMINAL PACKAGE DIMENSIONS (IN)
3	3 X 3 X 5	8	5-1/4 X 5-1/4 X 8
5	3 X 3 X 8	13	5-1/4 X 5-1/4 X 11-1/4
9	3 X 3 X 14	27	5-1/4 X 20
12	4 X 4 X 12	32	7-1/2 X 18
17	4 X 4 X 17	45	7-1/2 X 24
32	5 X 5 X 20-1/2	68	8-1/2 X 28
50	7 X 7 X 16	100	10 X 24

2.1.3 Packaged Anodes

Anodes shall be provided in packaged form with the anode surrounded by specially-prepared quick-wetting backfill and contained in a water permeable cloth or paper sack. Anodes shall be centered by means of spacers in the backfill material. The backfill material shall have the following composition, unless otherwise indicated:

Material	Approximate Percent by Weight
Gypsum	75
Bentonite	20
Sodium Sulphate	5
Total	100

2.1.4 Zinc Anodes

Zinc anodes shall conform to ASTM B 418, Type II.

2.1.5 Connecting Wire

2.1.5.1 Wire Requirements

Wire shall be No. 12 AWG solid copper wire, not less than 10 feet long, unspliced, complying with NFPA 70, Type TW or RHH insulation. Connecting wires for magnesium anodes shall be factory installed with the place or emergence from the anode in a cavity sealed flush with a dielectric sealing compound.

2.1.5.2 Anode Header Cable

Cable for anode header and distribution shall be No. 12 AWG stranded copper wire with type CP high molecular weight polyethylene, 7/64 inch thick insulation, 600-volt rating, in accordance with NEMA WC 5.

2.2 MISCELLANEOUS MATERIALS

2.2.1 Electrical Wire

Wire shall be a minimum No. 12 AWG stranded copper wire with NFPA 70, Type TW, RHW-USE or polyethylene insulation. Polyethylene insulation shall comply with the requirements of ASTM D 1248 and shall be of the following types, classes, and grades:

High-molecular weight polyethylene shall be Type I, Class C, Grade E5.

High-density polyethylene shall be Type III, Class C, Grade E3.

2.2.1.1 Wire Splicing

Connecting wire splicing shall be made with copper compression connectors or exothermic welds, following instructions of the manufacturer. Single split-bolt connections shall not be used. Sheaths for encapsulating electrical wire splices to be buried underground shall fit the insulated wires entering the spliced joints and epoxy potting compound shall be as specified below.

2.2.1.2 Test Wires

Test wires shall be AWG No. 12 stranded copper wire with NFPA 70, Type TW or RHW or polyethylene insulation.

2.2.1.3 Resistance Wire

Resistance wire shall be AWG No. 16 or No. 22 nickel-chromium wire.

2.2.2 Conduit

Rigid galvanized steel conduit and accessories shall conform to UL 6. Non metallic conduit shall conform to NEMA TC 2.

2.2.3 Test Boxes and Junctions Boxes

Boxes shall be outdoor type conforming to UL 514A.

2.2.4 Joint, Patch, Seal, and Repair Coating

Sealing and dielectric compound shall be a black, rubber based compound that is soft, permanently pliable, tacky, moldable, and unbacked. Compound shall be applied as recommended by the manufacturer, but not less than 1/2-inch thick. Coating compound shall be cold-applied coal-tar base mastic . Pressure-sensitive vinyl plastic electrical tape shall conform to UL 510.

2.2.5 Backfill Shields

Shields shall consist of approved pipeline wrapping or fiberglass-reinforced, coal-tar impregnated tape, or plastic weld caps, specifically made for the purpose and installed in accordance with the manufacturer's recommendations. When joint bonds are required, due to the use of mechanical joints, the entire joint shall be protected by the use of a kraft paper joint cover. The joint cover shall be filled with poured-in, hot coat-tar enamel.

2.2.6 Epoxy Potting Compound

Compound for encapsulating electrical wire splices to be buried underground shall be a two package system made for the purpose.

2.2.7 Test Stations

Stations shall be of the aboveground and shall be the standard product of a recognized manufacturer. Test stations shall be complete with an insulated terminal block having the required number of terminals. The test station shall be provided with a lockable over and shall have an embossed legend, "C.P. Test." A minimum of one (1) test station shall be provided each component of the pipe . A minimum of six (6) terminals shall be provided in each test station. A minimum of two (2) leads are required to the metallic pipe from each test station. Other conductors shall be provided for each anode, other foreign pipe, and reference cells as required. .

2.2.8 Joint and Continuity Bonds

Bonds shall be provided across all joints in the metallic water or gas lines, across any electrically discontinuous connections and all other pipes and structures with other than welded or threaded joints that are included in this cathodic protection system. Unless otherwise specified in the specifications or shown on the drawings, bonds between structures and across joints in pipe with other than welded or threaded joints shall be No. 8 AWG stranded copper cable with polyethylene insulation. Bonds between structures shall contain sufficient slack for any anticipated movement between structures. Bonds across pipe joints shall contain a minimum of 4 inches of slack to allow for pipe movement and soil stress. Bonds shall be attached by exothermic welding. Exothermic weld areas shall be insulated with coating compound and approved, and witnessed by the Contracting Officer. Continuity bonds shall be installed as necessary to reduce stray current interference. Additional joint bondings shall be accomplished by the Contractor where the necessity is discovered during construction or testing or where the Contracting Officer's representative directs that such bonding be done. Joint bonding shall include all associated excavation and backfilling. There shall be a minimum of two (2) continuity bonds between each structure and other than welded or threaded joints. The Contractor shall test for electrical continuity across all joints with other than welded or threaded joints and across all metallic portions or components. The Contractor shall provide bonding as required and as specified above until electrical continuity is achieved. Bonding test data shall be submitted for approval.

2.2.9 Resistance Bonds

Resistance bonds should be adjusted as outlined in this specification. Alternate methods may be used if they are approved by the Contracting Officer.

2.2.10 Stray Current Measurements

Stray current measurements should be performed at each test station. Stray currents resulting from lightning or overhead alternating current (AC) power transmission systems shall be mitigated in accordance with NACE RP0177.

2.2.11 Electrical Isolation of Structures

As a minimum, isolating flanges or unions shall be provided at the following locations:

a. Connection of new metallic piping or components to existing piping.

b. Pressure piping under floor slab to a building.

Isolation shall be provided at metallic connection of all lines to existing system and where connecting to a building. Additionally, isolation shall be provided between water and/or gas line; and foreign pipes that cross the new lines within 10 feet. Isolation fittings, including isolating flanges and couplings, shall be installed aboveground or in a concrete pit.

2.2.11.1 Electrically Isolating Pipe Joints

Electrically isolating pipe joints shall be of a type that is in regular factory production.

2.2.11.2 Electrically Conductive Couplings

Electrically conductive couplings shall be of a type that has a published maximum electrical resistance rating given in the manufacturer's literature. Cradles and seals shall be of a type that is in regular factory production made for the purpose of electrically insulating the carrier pipe from the casing and preventing the incursion of water into the annular space.

2.2.11.3 Insulating Joint Testing

A Model 601 Insulation Checker, as manufactured by "Gas Electronics", , or an approved equal, shall be used for insulating joint (flange) electrical testing.

2.2.12 Underground Structure Coating

This coating specification shall take precedence over any other project specification and drawing notes, whether stated or implied, and shall also apply to the pipeline or tank supplier. No variance in coating quality shall be allowed by the Contractor or Base Construction Representative without the written consent of the designer. All underground metallic pipelines and tanks to be cathodically protected shall be afforded a good quality factory-applied coating. This includes all carbon steel, cast-iron and ductile-iron pipelines or vessels. Coatings shall be selected, applied, and inspected in accordance with NACE RP0190 and as specified. If non-metallic pipelines are installed, all metallic fittings on pipe sections shall be coated in accordance with this specification section.

a. The nominal thickness of the metallic pipe joint or other component coating shall be 16 mils, plus or minus 5 percent.

b. Pipe and joint coating for factory applied or field repair material

shall be applied as recommended by the manufacturer and shall be one of the following:

(1) Continuously extruded polyethylene and adhesive coating system.
(2) Polyvinyl chloride pressure-sensitive adhesive tape.
(3) High density polyethylene/bituminous rubber compound tape.
(4) Butyl rubber tape.
(5) Coal tar epoxy.

2.2.12.1 Field Joints

All field joints shall be coated with materials compatible with the pipeline coating compound. The joint coating material shall be applied to an equal thickness as the pipeline coating. Unbonded coatings shall not be used on these buried metallic components. This includes the elimination of all unbonded polymer wraps or tubes. Once the pipeline or vessel is set in the trench, an inspection of the coating shall be conducted. This inspection shall include electrical holiday detection. Any damaged areas of the coating shall be properly repaired. The Contracting Officer shall be asked to witness inspection of the coating and testing using a holiday detector.

2.2.12.2 Inspection of Pipe Coatings

Any damage to the protective covering during transit and handling shall be repaired before installation. After field coating and wrapping has been applied, the entire pipe shall be inspected by an electric holiday detector with impressed current in accordance with NACE RP0188 using a full-ring, spring-type coil electrode. The holiday detector shall be equipped with a bell, buzzer, or other type of audible signal which sounds when a holiday is detected. All holidays in the protective covering shall be repaired immediately upon detection. Occasional checks of holiday detector potential will be made by the Contracting Officer's representative to determine suitability of the detector. All labor, materials, and equipment necessary for conducting the inspection shall be furnished by the Contractor.

a. Protective covering for aboveground piping system: Finish painting shall conform to the applicable paragraph of SECTION: 09900, PAINTS AND COATINGS, and as follows:

b. Ferrous surfaces: Shop-primed surfaces shall be touched-up with ferrous metal primer. Surfaces that have not been shop-primed shall be solvent-cleaned. Surfaces that contain loose rust, loose mil scale, and other foreign substances shall be mechanically-cleaned by power wire-brushing and primed with ferrous metal primer. Primed surface shall be finished with two (2) coats of exterior oil paint and vinyl paint. Coating for each entire piping service shall be an approved pipe line wrapping having a minimum coating resistance of 50,000 Ohms per square foot.

2.2.13 Resistance Wire

Wire shall be No. 16 or No. 22 nickel-chromium wire with TW insulation.

2.2.14 Electrical Connections

Electrical connections shall be done as follows:

a. Exothermic welds shall be "Cadweld"," Bundy", "Thermoweld" or an approved equal. Use of this material shall be in strict accordance with the manufacturer's recommendations.

b. Electrical-shielded arc welds shall be approved for use on steel pipe by shop drawing submittal action.

2.2.15 Electrical Tape

Pressure-sensitive vinyl plastic electrical tape shall conform to UL 510.

2.2.16 Permanent Reference Electrodes

Permanent reference electrodes shall be Cu-CuS04 electrodes suitable for direct burial. Electrodes shall be guaranteed by the supplier for 15 years' service in the environment in which they shall be placed. Electrodes shall be installed directly beneath pipe, or metallic component.

2.2.17 Casing

Where a pipeline is installed in a casing under a roadway or railway, the pipeline shall be electrically insulated from the casing, and the annular space sealed and filled with an approved corrosion inhibiting product against incursion of water.

PART 3 EXECUTION

3.1 CRITERIA OF PROTECTION

Acceptance criteria for determining the adequacy of protection on a buried underground pipe, tank metallic, component shall be in accordance with NACE RP0169 and NACE RP0285 and as specified below.

3.1.1 Iron and Steel

The following method (a) shall be used for testing cathodic protection voltages. If more than one method is required, method (b) shall be used.

a. A negative voltage of at least minus 850 millivolts as measured between the underground component and a saturated copper-copper sulphate reference electrode connecting the earth (electrolyte) directly over the underground component. Determination of this voltage shall be made with the cathodic protection system in operation. Voltage drops shall be considered for valid interpretation of this voltage measurement. A minimum of minus 850 millivolts "instant off" potential between the underground component being tested and the reference cell shall be achieved over 95 percent of the area of the structure. Adequate number of measurements shall be obtained over the entire structure, pipe, tank, or other metallic component to verify and record achievement of minus 850 millivolts "instant off." This potential shall be obtained over 95 percent of the total metallic area without the "instant off" potential exceeding 1200 millivolts.

b. A minimum polarization voltage shift of 100 millivolts as measured between the underground component and a saturated copper-copper sulphate reference electrode contacting the earth directly over the underground component. This polarization voltage shift shall be determined by interrupting the protective current and measuring the polarization decay. When the protective current is interrupted, an immediate voltage shift will occur. The voltage reading, after the immediate shift, shall be used as the base reading from which to measure polarization decay. Measurements achieving 100 millivolts decay shall be made over 95 percent of the metallic surface being protected.

c. For any metallic component, a minimum of four (4) measurements shall be made using subparagraph (a), above, and achieving the "instant off" potential of minus 850 millivolts. Two (2) measurements shall be made over the anodes and two (2) measurements shall be made at different locations near the component and farthest away from the anode.

3.2 ANODE STORAGE AND INSTALLATION

3.2.1 Anode Storage

Storage area for magnesium anodes will be designated by the Contracting Officer. If anodes are not stored in a building, tarps or similar protection should be used to protect anodes from inclement weather. Packaged anodes, damaged as a result of improper handling or being exposed to rain, shall be resacked by the Contractor and the required backfill added.

3.2.2 Anode Installation

Unless otherwise authorized, installation shall not proceed without the presence of the Contracting Officer. Anodes of the size specified shall be installed to the depth indicated and at the locations shown. Locations may be changed to clear obstructions with the approval of the Contracting Officer. Anodes shall be installed in sufficient number and of the required type, size, and spacing to obtain a uniform current distribution over the surface of the structure. The anode system shall e designed for a life of 25 years of continuous operation. Anodes shall be installed as indicated in a dry condition after any plastic or waterproof protective covering has been completely removed from the water permeable, permanent container housing the anode metal. The anode connecting wire shall not be used for lowering the anode into the hole. The annular space around the anode shall be backfilled with fine earth in 6 inch layers and each layer shall be hand tamped. Care must be exercised not to strike the anode or connecting wire with the tamper. Approximately 5 gallonsof water shall be applied to each filled hole after anode backfilling and tamping has been completed to a point about 6inches above the anode. After the water has been absorbed by the earth, backfilling shall be completed to the ground surface level.

3.2.2.1 Single Anodes

Single anodes, spaced as shown, shall be connected through a test station to the pipeline, allowing adequate slack in the connecting wire to compensate for movement during backfill operation.

3.2.2.2 Groups of Anodes

Groups of anodes, in quantity and location shown, shall be connected to an anode header cable. The anode header cable shall make contact with the structure to be protected only through a test station. Anode lead connection to the anode header cable shall be made by an approved crimp connector or exothermic weld and splice mold kit with appropriate potting compound.

3.2.2.3 Welding Methods

Connections to ferrous pipe and metal tanks shall be made by exothermic weld methods manufactured for the type of pipe and tank supplied. Electric arc welded connections and other types of welded connections to ferrous pipe and structures shall be approved before use.

3.2.3 Anode Placement - General

Packaged anodes shall be installed completely dry, and shall be lowered into holes by rope sling or by grasping the cloth gather. The anode lead wire shall not be used in lowering the anodes. The hole shall be backfilled with fine soil in 6inch layers and each layer shall be hand-tamped around the anode. Care must be exercised not to strike the anode or lead wire with the tamper. If immediate testing is to be performed, water shall be added only after backfilling and tamping has been completed to a point 6 inches above the anode. Approximately 2 gallons of water may be poured into the hole. After the water has been absorbed by the soil, backfilling and tamping may be completed to the

top of the hole. Anodes shall be installed as specified or shown. In the event a rock strata is encountered prior to achieving specified augered-hole depth, anodes may be installed horizontally to a depth at least as deep as the bottom of the pipe, with the approval of the Contracting Officer.

3.2.4 Underground Pipeline

Anodes shall be installed at a minimum of 8 feet and a maximum of 10 feet from the line to be protected.

3.2.5 Installation Details

Details shall conform to the requirements of this specification. Details shown on the drawings are indicative of the general type of material required, and are not intended to restrict selection to material of any particular manufacturer.

3.2.6 Lead Wire Connections

3.2.6.1 Underground Pipeline (Metallic)

To facilitate periodic electrical measurements during the life of the sacrificial anode system and to reduce the output current of the anodes, if required, all anode lead wires shall be connected to a test station and buried a minimum of 24 inches in depth. The cable shall be No. 10 AWG, stranded copper, polyethylene or RHW-USE insulated cable. The cable shall make contact with the structure only through a test station. Resistance wire shall be installed between the cable and the pipe cable, in the test station, to reduce the current output, if required. Anode connections, except in the test station, shall be made with exothermic welding process, and shall be insulated by means of at least three (3) layers of electrical tape; and all lead wire connections shall be installed in a moistureproof splice mold kit and filled with epoxy resin. Lead wire-to-structure connections shall be accomplished by an exothermic welding process. All welds shall be in accordance with the manufacturer's recommendations. A backfill shield filled with a pipeline mastic sealant or material compatible with the coating shall be placed over the weld connection and shall be of such diameter as to cover the exposed metal adequately.

3.2.6.2 Resistance Wire Splices

Resistance wire connections shall be accomplished with silver solder and the solder joints wrapped with a minimum of three (3) layers of pressure-sensitive tape. Lead wire connections shall be installed in a moistureproof splice mold kit and filled with epoxy resin.

3.2.7 Location of Test Stations

Test stations shall be of the type and location shown and shall be curb box mounted. Buried insulating joints shall be provided with test wire connections brought to a test station. Unless otherwise shown, other test stations shall be located as follows:

a. At 1,000-foot intervals or less.

b. Where the pipe or conduit crosses any other metal pipe.

c. At both ends of casings under roadways and railways.

d. Where both sides of an insulating joint are not accessible above ground for testing purposes.

3.2.8 Underground Pipe Joint Bonds

Underground pipe having other than welded or threaded coupling joints shall be made electrically continuous by means of a bonding connection installed across the joint.

3.3 ELECTRICAL ISOLATION OF STRUCTURES

3.3.1 Isolation Joints and Fittings

Isolating fittings, including main line isolating flanges and couplings, shall be installed aboveground, or within manholes, wherever possible. Where isolating joints must be covered with soil, they shall be fitted with a paper joint cover specifically manufactured for covering the particular joint, and the space within the cover filled with hot coal-tar enamel. Isolating fittings in lines entering buildings shall be located at least 12 inches above grade of floor level, when possible. Isolating joints shall be provided with grounding cells to protect against over-voltage surges or approved surge protection devices. The cells shall provide a low resistance across isolating joint without excessive loss of cathodic current.

3.3.2 Gas Distribution Piping

Electrical isolation shall be provided at each building riser pipe to the pressure regulator, at all points where a short to another structure or to a foreign structure may occur, and at other locations as indicated on the drawings.

3.4 TRENCHING AND BACKFILLING

Trenching and backfilling shall be in accordance with Section 02316a EXCAVATION, TRENCHING, AND BACKFILLING FOR UTILITY SYSTEMS .

3.5 TESTS AND MEASUREMENTS

3.5.1 Baseline Potentials

Each test and measurement will be witnessed by the Contracting Officer. The Contractor shall notify the Contracting Officer a minimum of five (5) working days prior to each test. After backfill of the pipe or tank, the static potential-to-soil of the pipe or tank shall be measured. The locations of these measurements shall be identical to the locations specified for pipe- or tank-to-reference electrode potential measurements. The initial measurements shall be recorded.

3.5.2 Isolation Testing

Before the anode system is connected to the pipe or tank, an isolation test shall be made at each isolating joint or fitting. This test shall demonstrate that no metallic contact, or short circuit exists between the two isolated sections of the pipe and/or tank. Any isolating fittings installed and found to be defective shall be reported to the Contracting Officer.

3.5.2.1 Insulation Checker

A Model 601 insulation checker, as manufactured by "Gas Electronics", or an approved equal, using the continuity check circuit, shall be used for isolating joint (flange) electrical testing. Testing shall conform to the manufacturer's operating instructions. Test shall be witnessed by the Contracting Officer. An isolating joint that is good will read full scale on the meter. If an isolating joint is shorted, the meter pointer will be deflected or near zero on the meter scale. Location of the fault shall be determined from the instructions, and the joint shall be repaired. If an isolating joint is located inside a vault, the pipe shall be sleeved with insulator when entering and leaving the vault.

3.5.2.2 Cathodic Protection Meter

A Model B3A2 cathodic protection meter, as manufactured by "M.C. Miller" or an approved equal, using the continuity check circuit, shall be used for isolating joint (flange) electrical testing. This test shall be performed in addition to the Model 601 insulation checker. Continuity is checked across the isolation joint after the test lead wire is shorted together and the meter adjusted to scale. A full-scale deflection indicates the system is shorted at some location. The Model 601 verifies that the particular insulation under test is good and the Model B3A2 verifies that the system is isolated. If the system is shorted, further testing shall be performed to isolate the location of the short.

3.5.3 Anode Output

As the anodes or groups of anodes are connected to the pipe or tank, current output shall be measured with an approved clamp-on milliammeter, calibrated shunt with a suitable millivoltmeter or multimeter, or a low resistance ammeter. (Of the three methods, the low-resistance ammeter is the least desirable and most inaccurate. The clamp-on milliammeter is the most accurate.) The valves obtained and the date, time, and location shall be recorded.

3.5.4 Reference Electrode Potential Measurements

Upon completion of the installation and with the entire cathodic protection system in operation, electrode potential measurements shall be made using a copper-copper sulphate reference electrode and a potentiometer-voltmeter, or a direct-current voltmeter having an internal resistance (sensitivity) of not less than 10 megohms per volt and a full scale of 10 volts. The locations of these measurements shall be identical to the locations used for baseline potentials. The values obtained and the date, time, and locations of measurements shall be recorded. No less than eight (8) measurements shall be made over any length of line or component. Additional measurements shall be made at each distribution service riser, with the reference electrode placed directly over the service line.

3.5.5 Location of Measurements

3.5.5.1 Piping or Conduit

For coated piping or conduit, measurements shall be taken from the reference electrode located in contact with the earth, directly over the pipe. Connection to the pipe shall be made at service risers, valves, test leads, or by other means suitable for test purposes. Pipe-to-soil potential measurements shall be made at intervals not exceeding 10 feet. The Contractor may use a continuous pipe-to-soil potential profile in lieu of 5 foot interval pipe-to-soil potential measurements. Additional measurements shall be made at each distribution service riser, with the reference electrode placed directly over the service line adjacent to the riser. Potentials shall be plotted versus distance to an approved scale. Locations where potentials do not meet or exceed the criteria shall be identified and reported to the Contracting Officer's representative.

3.5.5.2 Tanks

For underground tanks, measurements shall be taken from the reference electrode located:

a. Directly over the center of the tank.

b. At a point directly over the tank and midway between each pair of

anodes.

At least six measurements shall be made.

3.5.5.3 Casing Tests

Before final acceptance of the installation, the electrical separation of carrier pipe from casings shall be tested and any short circuits corrected.

3.5.5.4 Interference Testing

Before final acceptance of the installation, interference tests shall be made with respect to any foreign pipes in cooperation with the owner of the foreign pipes. A full report of the tests giving all details shall be made. Stray current measurements shall be performed at all isolating locations and at locations where the new pipeline crosses foreign metallic pipes. The method of measurements and locations of measurements shall be submitted for approval. As a minimum, stray current measurements shall be performed at the following locations:

a. Connection point of new pipeline to existing pipeline.

b. Crossing points of new pipeline with existing lines.

Results of stray current measurements shall also be submitted for approval.

3.5.5.5 Holiday Test

Any damage to the protective covering during transit and handling shall be repaired before installation. After field-coating and wrapping has been applied, the entire pipe shall be inspected by an electric holiday detector with impressed current in accordance with NACE RP0188 using a full-ring, spring-type coil electrode. The holiday detector shall be equipped with a bell, buzzer, or other type of audible signal which sounds when a holiday is detected. Holidays in the protective covering shall be repaired upon detection. Occasional checks of holiday detector potential will be made by the Contracting Officer to determine suitability of the detector. Labor, materials, and equipment necessary for conducting the inspection shall be furnished by the Contractor. The coating system shall be inspected for holes, voids, cracks, and other damage during installation.

3.5.5.6 Recording Measurements

All pipe- or tank-to-soil potential measurements, including initial potentials where required, shall be recorded. The Contractor shall locate, correct and report to the Contracting Officer any short circuits to foreign pipes encountered during checkout of the installed cathodic protection system. Pipe- and Tank-to-soil potential measurements shall be taken on as many pipes as necessary to determine the extent of protection or to locate short-circuits.

3.6 TRAINING COURSE

The Contractor shall conduct a training course for the operating staff as designated by the Contracting Officer. The training period shall consist of a total of 4 hours of normal working time and shall start after the system is functionally completed but prior to final acceptance tests. The field instructions shall cover all of the items contained in the operating and maintenance instructions, as well as demonstrations of routine maintenance operations, including testing procedures included in the maintenance instructions. At least 14 days prior to date of proposed conduction of the training course, the training course curriculum shall be submitted for approval, along with the proposed training date. Training shall consist of demonstration of test equipment, providing forms for test data and the

tolerances which indicate that the system works.

3.7 CLEANUP

The Contractor shall be responsible for cleanup of the construction site. All paper bags, wire clippings, etc., shall be disposed of as directed. Paper bags, wire clippings and other waste shall not be put in bell holes or anodes excavation.

3.8 MISCELLANEOUS INSTALLATION AND TESTING

3.8.1 Coatings

All aboveground pipeline shall be coated as indicated or as approved. The coating shall have a minimum thickness of 7 mil. The pipeline coating shall be in accordance with all applicable Federal, State, and local regulations.

3.8.2 Excavation

In the event rock is encountered in providing the required depth for anodes, the Contractor shall determine an alternate approved location and, if the depth is still not provided, an alternate plan shall be submitted to the Contracting Officer. Alternate techniques and depths must be approved prior to implementation.

3.9 SPARE PARTS

After approval of shop drawings, and not later than three (3) months prior to the date of beneficial occupancy, the Contractor shall furnish spare parts data for each different item of material and equipment specified. The data shall include a complete list of parts, special tools, and supplies, with current unit prices and source of supply. In addition, the Contractor shall supply information for material and equipment replacement for all other components of the complete system, including anodes, cables, splice kits and connectors, corrosion test stations, and any other components not listed above. The Contractor shall furnish a reference cell on a reel with 350 feet of conductor, along with other accessories, and a digital voltmeter that can be used in the maintenance of this cathodic protection system. Use of this equipment shall be demonstrated in actual tests during the training course, which shall include a description of the the equipment and measurement of the pipe-to-soil potential, rainfall, and gas company voltages. The equipment shall be turned over to the Contracting Office to give to the base (LFM shop).

3.10 SEEDING

Seeding shall be done by the Contractor, as directed, in all unsurfaced locations disturbed by this construction. In areas where grass cover exists, it is possible that sod can be carefully removed, watered, and stored during construction operations, and replaced after the operations are completed since it is estimated that no section of pipeline should remain uncovered for more than two (2) days. The use of sod in lieu of seeding shall require approval by the Contracting Officer.

3.11 SYSTEM TESTING

The Contractor shall submit a report including potential measurements taken at adequately-close intervals to establish that minus 850 millivolts potential, "instant-off" potential, is provided, and that the cathodic protection is not providing interference to other foreign pipes causing damage to paint or pipes. The report shall provide a narrative describing how the criteria of protection is achieved without damaging other pipe or structures in the area.

-- End of Section --

SECTION TABLE OF CONTENTS

DIVISION 13 - SPECIAL CONSTRUCTION

SECTION 13112A

CATHODIC PROTECTION SYSTEM (IMPRESSED CURRENT)

11/98

PART 1 GENERAL

1.1 REFERENCES
1.2 SUBMITTALS
1.3 GENERAL REQUIREMENTS
1.3.1 Contractor's Modifications
1.3.2 Isolators
1.3.3 Anodes and Bond Wires
1.3.4 Surge Protection
1.3.5 Sacrificial Anodes
1.3.6 Services of "Corrosion Expert"

PART 2 PRODUCTS

2.1 IMPRESSED CURRENT ANODES
2.1.1 Mixed Metal Oxide Anodes
2.1.1.1 Conductive Material
2.1.1.2 Anode Life Test
2.1.1.3 Canister Contained Mixed Metal Oxide Anodes
2.1.1.4 Anode Connecting Cables
2.1.1.5 Canister Connection Cables
2.2 RECTIFIERS AND ASSOCIATED EQUIPMENT
2.2.1 Rectifier Unit
2.2.1.1 Transformer
2.2.1.2 Rectifiers
2.2.1.3 Meters
2.2.1.4 Circuit Breaker
2.2.1.5 Fuses
2.2.2 Cabinet Construction
2.2.2.1 Wiring Diagram
2.2.2.2 Grounding Provisions
2.2.2.3 Resistance to Ground
2.2.2.4 Cabinet Paint System
2.2.3 Wiring
2.3 COKE BREEZE
2.3.1 Calcined Petroleum Coke Breeze (Dry)
2.3.1.1 Electrical Resistivity
2.3.1.2 General Backfill Specifications
2.3.2 Metallurgical Coke Breeze (Processed)
2.3.2.1 Electrical Resistivity (Nominal)
2.3.2.2 General Backfill Specifications
2.4 MISCELLANEOUS MATERIALS
2.4.1 Electrical Wire
2.4.1.1 Anode Connecting Wire
2.4.1.2 Anode Header Cable
2.4.1.3 Test Wires
2.4.1.4 Resistance Wire
2.4.2 Conduit
2.4.3 Test Boxes and Junction Boxes
2.4.4 Polyethylene Insulation

2.4.4.1 High Molecular Weight Polyethylene
2.4.4.2 High Density Polyethylene
2.4.5 Test Stations
2.4.6 Calibrated Shunts
2.4.7 Sealing and Dielectric Compound
2.4.8 Protective Covering
2.4.8.1 Pipeline Metallic Components
2.4.8.2 Field Joints
2.4.8.3 Inspection of Pipe Coatings
2.4.8.4 Above Ground Piping System
2.4.9 Preformed Sheaths
2.4.10 Epoxy Potting Compound
2.4.11 Backfill Shields
2.4.12 Electrical Tape
2.4.13 Cable Marker Tape
2.4.14 Electrically Isolating Pipe Joints
2.4.14.1 Threaded Fittings
2.4.14.2 Electrically Isolating Pipe Joints
2.4.15 Electrically Conductive Couplings
2.4.16 Joint and Continuity Bonds
2.4.16.1 Resistance Bonds
2.4.16.2 Stray Current Measurements
2.4.17 Electrical Isolation of Structures

PART 3 EXECUTION

3.1 CRITERIA OF PROTECTION
3.1.1 Iron and Steel
3.2 GROUND BED INSTALLATION
3.2.1 Shallow Ground Beds
3.2.1.1 Vertically Buried Bare Anodes
3.2.1.2 Vertically Buried Canister-Contained Anodes
3.2.1.3 Cable Protection
3.3 MAGNESIUM ANODE INSTALLATION
3.4 MISCELLANEOUS INSTALLATION
3.4.1 Rectifier Installation
3.4.2 Wire Connections
3.4.2.1 Wire Splicing
3.4.2.2 Steel Surfaces
3.4.3 Pipe Joints
3.4.3.1 Electrical Continuity
3.4.3.2 Coating
3.4.3.3 Electrical Isolation of Structures
3.4.4 Dissimilar Metals
3.4.5 Ferrous Valves
3.4.6 Brass or Bronze Valves
3.4.7 Metal Pipe Junction
3.4.8 Casing
3.4.9 Test Stations
3.5 TESTS AND MEASUREMENTS
3.5.1 Baseline Potentials
3.5.2 Isolation Testing
3.5.2.1 Insulation Checker
3.5.2.2 Cathodic Protection Meter
3.5.3 Anode Output
3.5.4 Electrode Potential Measurements
3.5.5 Location of Measurements
3.5.5.1 Coated Piping or Conduit
3.5.6 Casing Tests
3.5.7 Interference Testing
3.5.8 Holiday Test
3.5.9 Recording Measurements
3.6 TRAINING COURSE

-- End of Section Table of Contents --

SECTION 13112A

CATHODIC PROTECTION SYSTEM (IMPRESSED CURRENT)
11/98

PART 1 GENERAL

1.1 REFERENCES

The publications listed below form a part of this specification to the extent referenced. The publications are referred to in the text by basic designation only.

AMERICAN SOCIETY FOR TESTING AND MATERIALS (ASTM)

ASTM D 1248	(1998) Polyethylene Plastics Molding and Extrusion Materials

U.S. NATIONAL ARCHIVES AND RECORDS ADMINISTRATION (NARA)

49 CFR 195	Transportation of Hazardous Liquids by Pipeline

INSTITUTE OF ELECTRICAL AND ELECTRONICS ENGINEERS (IEEE)

IEEE Std 81	(1983) Guide for Measuring Earth Resistivity, Ground Impedance, and Earth Surface Potentials of a Ground System (Part 1)

NACE INTERNATIONAL (NACE)

NACE RP0169	(1996) Control of External Corrosion on Underground or Submerged Metallic Piping Systems
NACE RP0188	(1999) Discontinuity (Holiday) Testing of Protective Coatings

NATIONAL ELECTRICAL MANUFACTURERS ASSOCIATION (NEMA)

NEMA TC 2	(1998) Electrical Polyvinyl Chloride (PVC) Tubing (EPT) and Conduit (EPC-40 and EPC-80)
NEMA WC 5	(1992; Rev 2 1996) Thermoplastic-Insulated Wire and Cable for the Transmission and Distribution of Electrical Energy

NATIONAL FIRE PROTECTION ASSOCIATION (NFPA)

NFPA 70	(2002) National Electrical Code

UNDERWRITERS LABORATORIES (UL)

UL 467	(1993; Rev thru Apr 1999) Grounding and Bonding Equipment
UL 506	(1994; R Oct 1997) Specialty Transformers
UL 510	(1994;Rev thru Apr 1998) Polyvinyl Chloride, Polyethylene, and Rubber Insulating Tape

UL 514A (1996; Rev Dec 1999) Metallic Outlet Boxes

1.2 SUBMITTALS

Government approval is required for submittals with a "G" designation; submittals not having a "G" designation are for information only. When used, a designation following the "G" designation identifies the office that will review the submittal for the Government. The following shall be submitted in accordance with Section 01330 SUBMITTAL PROCEDURES:

SD-02 Shop Drawings

Drawings; G-AE

Six copies of detail drawings consisting of a complete list of equipment and material including manufacturer's descriptive and technical literature, catalog cuts, results of system design calculations including soil resistivity, installation instructions and certified test data stating the maximum recommended anode current output density and the rate of gaseous production, if any, at that current density. Detail drawings shall contain complete wiring and schematic diagrams and any other details required to demonstrate that the system has been coordinated and will function properly as a unit. Test stations shall each have a unique identification number as shown on the drawings. The test stations shall be in numerical order and shall start with 170.

Contractor's Modifications; G-AE

Six copies of detail drawings showing proposed changes in location, scope or performance indicating any variations from, additions to, or clarifications of contract drawings. The drawings shall show proposed changes in anode arrangement, anode size and number, anode materials and layout details, conduit size, wire size, mounting details, wiring diagram, method for electrically isolating each pipe, and any other pertinent information to the proper installation and performance of the system.

SD-03 Product Data

Miscellaneous Materials; G-RE
Equipment; G-RE

Within 45 days after receipt of notice to proceed, an itemized list of equipment and materials including item number, quantity, and manufacturer of each item. The list shall be accompanied by a description of procedures for each type of testing and adjustment, including testing of coating for thickness and holidays. Installation of materials and equipment shall not commence until this submittal is approved.

Spare Parts;

Spare parts data for each different item of material and equipment specified, after approval of detail drawings and not later than 2 months prior to the date of beneficial occupancy. The data shall include a complete list of parts, special tools, and supplies, with current unit prices and source of supply. One spare anode of each type shall be furnished.

SD-06 Test Reports

Tests and Measurements; G-AE

Test reports in booklet form tabulating field tests and measurements performed, upon completion and testing of the installed system and including close interval potential survey, casing and interference tests, final system test verifying protection, insulated joint and bond tests, and holiday coating test. Each test report shall indicate the final position of controls. A certified test report showing that the connecting method has passed a 120-day laboratory test without failure at the place of connection, wherein the anode is subjected to maximum recommended current output while immersed in a 3 percent sodium chloride solution.

Contractor's Modifications; G-RE

Final report regarding supplemental magnesium anode installation. The report shall include pipe-to-soil measurements throughout the affected area, indicating that the additions corrected the conditions which made the additional anodes necessary, and current measurements for the additional anodes.

SD-07 Certificates

Cathodic Protection System; G-RE

Proof that the materials and equipment furnished under this section conform to the specified requirements contained in the referenced standards or publications. The label or listing by the specified agency will be acceptable evidence of such compliance.

Services of "Corrosion Expert"; G-AE

Evidence of qualifications of the "corrosion expert".

(a) The "corrosion expert's" name and qualifications shall be certified in writing to the Contracting Officer prior to the start of construction.

(b) Certification shall be submitted giving the name of the firm, the number of years of experience, and a list of not less than five (5) of the firm's installations three (3) or more years old that have been tested and found satisfactory.

SD-10 Operation and Maintenance Data

Cathodic Protection System;

Six copies of operating manual outlining the step-by-step procedures required for system startup, operation, adjustment of current flow, and shutdown. The manuals shall include the manufacturer's name, model number, service manual, parts list, and brief description of all equipment and their basic operating features. Six copies of maintenance manual listing routine maintenance procedures, recommendation for maintenance testing, possible breakdowns and repairs, and troubleshooting guides. The manuals shall include single line diagrams for the system as installed; instructions in making pipe-to-reference cell potential measurements and frequency of monitoring; instructions for dielectric connections, interference and sacrificial anode bonds; instructions shall include precautions to ensure safe conditions during repair of pipe system.

Training Course;

The proposed Training Course Curriculum (including topics and dates of discussion) indicating that all of the items contained in the operating and maintenance instructions, as well as demonstrations of routine maintenance operations, including testing procedures included in the maintenance instructions, are to be covered.

1.3 GENERAL REQUIREMENTS

A complete, operating impressed current cathodic protection system in accordance with NFPA 70, the applicable federal, state and local regulations, and the requirements of this contract shall be provided. In addition to the minimum requirements of these specifications, construction of hazardous liquid pipelines, and associated cathodic protection system shall be in compliance with 49 CFR 195 . The system shall include planning, inspecting the installation, adjusting and testing cathodic protection and test system using rectifiers and impressed current anodes, supplemented with sacrificial anodes as needed, for utilities and equipment shown. The cathodic protection system shall also include cables, connectors, splices, corrosion protection test stations, ace power panels, and any other equipment required for a complete operating system providing the specified protection. The cathodic protection system shall include (a) calculations for rectifier, anodes, and any recommendations for supplementing or changing the minimum design criteria to provide the specified potentials and (b) equipment, wiring, and wiring devices necessary to produce a continuous flow of direct current from anodes in the soil electrolyte to the pipe surfaces. The installation shall meet the specified protection criteria for a 25 year life.

The new hydrant fuel system is being connected to existing piping without isolation. The existing piping is protected by an impressed current system located in the in-field by the runway. The exisitng system consists of a ground bed of 20 anodes with a new rectifier 100 VDC, 40ADC, Rectifier #1 located on Bldg 818. The Contractor shall take some initial readings of the piping being connected to and a reading approximately every 100 feet for a total of 5 readings. After the new impressed current system is installed and energized for at least 7 days and the hydrant fuel piping indicated to be removed has been removed or at least disconnected from the system, the contractor shall balance the two rectierier systems. Note that this new piping is located at the far end of the existing impressed current system.

1.3.1 Contractor's Modifications

The specified system is based on an impressed current system supplemented with magnesium anodes. The Contractor may modify the cathodic protection system after review of the project, site verification and analysis if the proposed modifications include the impressed current anodes and rectifiers and will provide better overall system performance. The modifications shall be fully described, shall be approved by the Contracting Officer and shall meet the following criteria. The proposed system shall achieve a minimum pipe-to-soil "Instant Off" potential of minus 850 millivolts with reference to a saturated copper-copper sulfate reference cell on the underground metallic components of the piping . The Contractor shall take resistivity measurements of the soil in the vicinity of the pipes and ground bed sites; based upon the measurements taken, the current and voltage of the rectifier shall be adjusted as required to produce a minimum of minus 850 millivolts "Instant Off" potential between the structure being tested and the reference cell. This potential shall be obtained over 95 percent of the metallic area without the "Instant Off" potential exceeding 1200 millivolts.

1.3.2 Isolators

Isolators are required to isolate the indicated pipes from any other structure.

1.3.3 Anodes and Bond Wires

Anodes shall be installed in sufficient number and of the required type, size and spacing to obtain a uniform current distribution of 2.5 milliamperes per square foot minimum to underground metal surfaces. For each cathodic protection system, the metallic components and structures to be protected shall be made electrically continuous. This shall be accomplished by installing bond wires between the various structures. Bonding of existing buried structures may also be required to preclude detrimental stray current effects and safety hazards. Provisions shall be included to return stray current to its source without damaging structures intercepting the stray current. The electrical isolation of underground facilities in accordance with acceptable industry practice shall be included under this section.

1.3.4 Surge Protection

Sealed weatherproof lightning arrestor devices shall be installed across insulated flanges or fittings installed in underground piping as indicated on the drawings. The arrestor shall be gapless, self-healing, solid state type. Lead wires shall be number 6 AWG copper with high molecular weight polyethylene (HMWPE) insulation. The type of surge protection is specified in 15060. The surge protection shall be listed or approved for use in a hazardoud area.

1.3.5 Sacrificial Anodes

Requirements are given in 13110A CATHODIC PROTECTION SYSTEM (SACRIFICIAL ANODE).

1.3.6 Services of "Corrosion Expert"

The Contractor shall obtain the services of a "corrosion expert" to supervise, inspect, and test the installation and performance of the cathodic protection system. "Corrosion expert" refers to a person, who, by reason of thorough knowledge of the physical sciences and the principles of engineering and mathematics, acquired by professional education and related practical experience, is qualified to engage in the practice of corrosion control of buried metallic piping and tank systems. Such a person must be accredited or certified by the National Association of Corrosion Engineers (NACE) as a NACE Accredited Corrosion Specialist or a NACE certified Cathodic Protection (CP) Specialist or be a registered professional engineer who has certification or licensing that includes education and experience in corrosion control of buried or submerged metallic piping and tank systems, if such certification or licensing includes 5 years experience in corrosion control on underground metallic surfaces of the type under this contract. The "corrosion expert" shall make at least 3 visits to the project site. The first of these visits shall include obtaining soil resistivity data, acknowledging the type of pipeline coatings to be used and reporting to the Contractor the type of cathodic protection required. Once the submittals are approved and the materials delivered, the "corrosion expert" shall revisit the site to ensure the Contractor understands installation practices and laying out the components. The third visit shall involve testing the installed cathodic protection systems and training applicable personnel on proper maintenance techniques. The "corrosion expert" shall supervise installation and testing of all cathodic protection.

PART 2 PRODUCTS

2.1 IMPRESSED CURRENT ANODES

2.1.1 Mixed Metal Oxide Anodes

Mixed metal oxide anodes shall be of the size indicated and shall conform to the following requirements.

2.1.1.1 Conductive Material

The electrically conductive coating shall contain a mixture consisting primarily of iridium, tantalum, and titanium oxides. The average composition is generally a 50/50 atomic percent mixture of iridium and titanium oxides, with a small amount of tantalum. The resistivity, as tested by the manufacturer, shall be no more than 0.002 ohm-centimeter, and the bond strength shall be greater than 7.25 ksi to guarantee the current capacity life and the quality of the conductive ceramic coating. The adhesion or bond strength shall be determined by epoxy bonding a 0.1 inch diameter stud to the ceramic coating and measuring the load to failure (about 10.15 ksi) of either the epoxy or the interface between the coating and the substrate. The anode must be inert and the electrically conductive ceramic coating dimensionally stable. The ceramic coated anode shall be capable of sustaining a current density of 100 ampere per 10.764 square feet in an oxygen generating electrolyte at 150 degrees F for 20 years, to ensure the current capacity life. An accelerated current capacity life test shall be performed by the manufacturer on every lot of anode wire used to construct the anode as described. The mixed metal oxide coating shall be applied to the wire anode by a firm that is regularly engaged in and has a minimum 5 years experience in manufacturing and applying mixed metal oxide coatings to titanium anode substrates. The mixed metal oxide must be sintered to the titanium surface as to remain tightly bound to the surface when bent 180 degrees onto itself.

2.1.1.2 Anode Life Test

The anode wire material shall sustain current densities of 100 ampere per 10.764 square feet in an oxygen generating electrolyte for 20 years. The manufacturer shall certify that a representative sample taken from the same lot used to construct the anode, has been tested and meets the following criteria. The test cell sustains a current density of 10,000 ampere per 10.764 square feet in a 15 weight percent sulfuric acid electrolyte at 150 degrees F without an increase in anode to cathode potential of more than 1 volt. The cell containing the anode shall be powered with a constant current power supply for the 30 day test period. The representative sample shall be 5 inch in length taken from the lot of wire that is to be used for the anode.

2.1.1.3 Canister Contained Mixed Metal Oxide Anodes

Canister contained mixed metal oxide anodes shall be packed at the factory in light weight, light gauge steel uni-body TIG welded canisters with calcinated petroleum coke breeze. The canisters shall be capped with TIG welded steel and caps providing a totally encapsulated construction. The connecting cable shall pass through a hole in an end cap designed to be tight fitting with a heavy duty strain relief allowing for handling of the canister by the cable. The anode shall be centered in the canister by centralizers to maintain rod position.

2.1.1.4 Anode Connecting Cables

Anodes shall have connecting cables installed at the factory. The connection between the anode rod or ribbon and the lead wire shall be made with a solid crimp couple with solder. The connection shall be sealed in cast epoxy.

2.1.1.5 Canister Connection Cables

Canister connecting cables shall consist of an ultra low resistance solder connection which is a minimum of three times stronger than the cable. For ceramic coated canister anodes, the cable connection shall consist of two molded dielectric layers (pressure seals), a flexible backfill resin encapsulant stabilizer, a schedule 40 PVC pipe Type 1 seal, and Type 1 PVC pipe end plugs. The seals and end plugs shall resist chlorine gas and acid.

2.2 RECTIFIERS AND ASSOCIATED EQUIPMENT

2.2.1 Rectifier Unit

Rectifier unit shall consist of a transformer, rectifying elements, transformer tap adjuster, terminal block, one dc output voltmeter, one dc output ammeter, one toggle switch for each meter, fuse holders with fuses for each dc circuit, variable resistors, an ac power-supply circuit breaker, lightning arresters for both input and output, all wired and assembled in a weatherproof cabinet. The overall efficiency of the rectifier shall be not less than 65 percent when operated at nameplate rating and shall be capable of supplying continuous full rated output at an ambient temperature of 112 degrees F in full sunlight with expected life in excess of 10 years.

2.2.1.1 Transformer

Transformer shall conform to UL 506.

2.2.1.2 Rectifiers

Rectifying elements shall be selenium cells connected to provide full-wave rectification. Silicon diodes shall be protected by selenium surge cells or varistors against over-voltage surges and by current-limiting devices against over-current surges.

2.2.1.3 Meters

Meters shall be accurate to within plus or minus 2 percent of full scale at 80 degrees F, and shall possess temperature stability above and below 80 degrees F and shall possess temperature stability above and below 80 degrees F of at least 1 percent per 10 degrees F. Separate meters shall be 2-1/2 inch nominal size or larger.

2.2.1.4 Circuit Breaker

A single -pole, flush-mounted, fully magnetic, properly rated non-terminal type circuit breaker shall be installed in the primary circuit of the rectifier supply transformer.

2.2.1.5 Fuses

Cartridge-type fuses with suitable fuse holders shall be provided in each leg of the dc circuit.

2.2.2 Cabinet Construction

Cabinet shall be constructed of not lighter than No. 16 gauge steel hot dipped galvanized steel, stainless steel or aluminum, and shall be provided with a full door. The enclosure shall have oil-resistant gasket. The door shall be hinged and have a hasp that will permit the use of a padlock. The cabinet shall be fitted with screened openings of the proper size to provide for adequate cooling. Holes, conduit knockouts, or threaded hubs of sufficient size and number shall be conveniently located.

2.2.2.1 Wiring Diagram

A complete wiring diagram of the power unit showing both the ac supply and the dc connections to anodes shall be on the inside of the cabinet door. All components shall be shown and labeled. In addition, drawings to scale shall show the layout of the rectifier and anode bed and connections to the piping.

2.2.2.2 Grounding Provisions

Grounding provisions shall be as specified in SECTION 16415A, ELECTRICAL WORK,

INTERIOR. The grounding conductor from the terminal to the earth grounding system shall be solid or stranded copper not smaller than No. 6 AWG. The earth grounding system shall consist of one or more ground rods. Ground rods shall be of copper-clad steel conforming to UL 467 not less than 3/4 inch in diameter by 10 feet in length. Rods shall be driven full length into the earth. Sectional type rods may be used.

2.2.2.3 Resistance to Ground

The resistance to ground shall be measured using the fall-of-potential method described in IEEE Std 81. The maximum resistance of driven ground shall not exceed 25 ohms under normally dry conditions. If this resistance cannot be obtained with a single rod, two additional rods not less than 6 feet on centers, or if sectional type rods are used, two additional sections may be coupled and driven with the first rod. In high-ground-resistance, UL listed chemically charged ground rods may be used. If the resultant resistance exceeds 25 ohms measured not less than 48 hours after rainfall, the Contracting Officer shall be notified immediately. Connections below grade shall be fusion welded. Connections above grade shall be fusion welded or shall use UL 467 approved connectors.

2.2.2.4 Cabinet Paint System

The cabinet and mounting support shall be painted with the manufacturer's standard painting system.

2.2.3 Wiring

Wiring shall be installed in accordance with NFPA 70 utilizing type TW or RHW or polyethylene insulation. Fittings for conduit and cable work shall conform to UL 514A. Outlets shall be of the threaded hub type with gasketed covers. Conduit shall be hub type with gasketed covers. Conduit shall be securely fastened at 8 foot intervals or less. Splices shall be made in outlet fittings only. Conductors shall be color coded for identification. Cable for anode header and distribution shall be sized per the drawings and shall be stranded copper wire with type cathodic protection high molecular weight polyethylene insulation.

2.3 COKE BREEZE

2.3.1 Calcined Petroleum Coke Breeze (Dry)

Breeze shall conform to the following requirements:

2.3.1.1 Electrical Resistivity

Resistivity shall not exceed 1 milliohm-meter (0.1 ohm-cm) Great Lake Carbon C 12 A Test Method.

2.3.1.2 General Backfill Specifications

Bulk Density - 65 to 75 lbs/cubic foot
Fixed Carbon - 99.0% or greater
Volatiles - 0.2% or less
Sizing - 100% less than 1/2 inch

2.3.2 Metallurgical Coke Breeze (Processed)

Breeze shall conform to the following requirements:

2.3.2.1 Electrical Resistivity (Nominal)

Nominal electrical resistivity shall be:

a. 100 milliohm-meter (10 ohm-centimeter) Max., tightly compacted.

b. 100 milliohm-meter to 150 milliohm-meter, (10 to 15 ohm-centimeter,) lightly compacted.

c. 150 to 200 milliohm-meter, (15 to 20 ohm-centimeter,) loose.

2.3.2.2 General Backfill Specifications

Bulk density - 38 to 42 pounds per cubic foot
Fixed Carbon - 80% or greater
Sizing - 100% less than 3/8 inch

2.4 MISCELLANEOUS MATERIALS

2.4.1 Electrical Wire

2.4.1.1 Anode Connecting Wire

Anode connecting wire shall be No. 8 AWG stranded copper wire with type CP high molecular weight polyethylene insulation, 7/64 inch thick, 600 volt rating, in accordance with NEMA WC 5. Cable-to-anode contact resistance shall be 0.003 ohms maximum.

2.4.1.2 Anode Header Cable

Cable for anode header and distribution shall be No. 6 AWG stranded copper wire with type CP high molecular weight polyethylene,7/64 inch thick insulation , 600-volt rating, in accordance with NEMA WC 5.

2.4.1.3 Test Wires

Test wires shall be No. 12 AWG stranded copper wire with NFPA 70 Type TW or RHW or polyethylene insulation.

2.4.1.4 Resistance Wire

Resistance wire shall be AWG No. 16 or No. 22 nickel-chromium wire.

2.4.2 Conduit

Nonmetallic conduit shall conform to NEMA TC 2.

2.4.3 Test Boxes and Junction Boxes

Boxes shall be outdoor type conforming to UL 514A.

2.4.4 Polyethylene Insulation

Polyethylene insulation shall comply with the requirements of ASTM D 1248 and of the following types, classes, and grades:

2.4.4.1 High Molecular Weight Polyethylene

High molecular weight polyethylene shall be Type I, Class C, Grade E5.

2.4.4.2 High Density Polyethylene

High density polyethylene shall be Type III, Class C, Grade E3.

2.4.5 Test Stations

Test stations shall be complete with an insulated terminal block having the indicated number of terminals and shall be provided with a lockable cover and have a cast-in legend, "C.P. Test". Test stations shall be complete with an insulated terminal block having the required number of terminals. (One terminal required for each conductor). Sufficient test stations to monitor underground isolation points shall be provided. Test-bond stations (potential measurement and stray current control) shall be provided to monitor pipe to soil potential of proposed underground pipes or existing underground metallic structures which may conduct stray current from the new cathodic protection system. The location of the test-bond stations shall ensure that the pipe to soil potential of metallic pipe not designated to be protected is not made less negative by the energization of the cathodic protection system. Test station terminal connections and the terminal conductor shall be permanently tagged to identify each termination of the conductors (e.g. identify the conductors connected to the protected structures). Conductors shall be permanently identified in the station by means of plastic or metal tags, or plastic sleeves to indicate termination. Each conductor shall be color coded in accordance with the drawings. The station test facility, including permanent Cu-Cu S04 reference cells and test returns shall be installed as indicated. Pavement inserts shall be nonmetallic and shall allow Cu-Cu S04 reference electrode to contact the electrolyte beneath the pavement surface. Abbreviations shall not be used. Welding of electrical connections shall be as follows: Exothermic welds shall be "CADweld", "Thermo-weld", or approved equal. Use and selection of these materials and welding equipment shall be in accordance with the manufacturer's recommendations.

2.4.6 Calibrated Shunts

Shunts calibrated in current per potential (e.g. mA/V) shall be installed between the lead or header wire connected to the anode and the current collector lead connected to the structure. The calibration of the shunt shall be clearly marked and installed to be visible.

2.4.7 Sealing and Dielectric Compound

Sealing and dielectric compound shall be a black, rubber based compound that is soft, permanently pliable, tacky, moldable, and unbacked. Compound shall be applied as recommended by the manufacturer, but not less than 1/8 inch thick.

2.4.8 Protective Covering

Except as otherwise specified, protective covering for underground metallic components including pipe and fittings shall be applied mechanically in a factory or field plant specially equipped for the purpose. Valves and fittings that cannot be coated and wrapped mechanically shall have the protective covering applied by hand, preferably at the plant applying the covering to the pipe. Joints shall be coated and wrapped by hand. Hand coating and wrapping shall produce a covering equal in thickness to the covering applied mechanically. Piping and components installed in valve boxes or manholes shall also receive the specified protective coating.

2.4.8.1 Pipeline Metallic Components

Underground metallic pipelines and structures shall have a good quality factory applied coating. The coating shall be per 15060. Any damage to the coating such as scrapes, cuts, punctures or ex

b. Pipe and joint coating for factory applied or field repair material shall be applied as recommended by the manufacturer and shall be one of the following:

(1) Continuously extruded polyethylene and adhesive coating system.

(2) Polyvinyl chloride pressure-sensitive adhesive tape.

(3) High density polyethylene/bituminous rubber compound tape.

2.4.8.2 Field Joints

Field joints shall be coated with material compatible with the pipeline coating compound. The joint coating material shall be applied to an equal thickness as the pipeline coating. Unbonded coatings shall not be used on buried metallic piping. This prohibition includes unbonded polymer wraps or tubes.

2.4.8.3 Inspection of Pipe Coatings

Once the pipeline or vessel is set in the trench, an inspection of the coating shall be conducted. This inspection shall include electrical holiday detection as described in paragraph TESTS AND MEASUREMENTS.

2.4.8.4 Above Ground Piping System

Above ground piping shall be given two coats of exterior oil paint. Surface preparation shall be as recommended by paint manufacturer, except as follows: ferrous, shop primed surfaces shall be touched up with ferrous metal primer; surfaces that have not been shop primed shall be solvent cleaned; surfaces that contain loose rust, mil scale, or other foreign substances shall be mechanically cleaned by power wire brushing and primed with ferrous metal primer; and primed surfaces shall be finished with two coats of exterior oil paint or vinyl paint.

2.4.9 Preformed Sheaths

Preformed sheaths for encapsulating electrical wire splices to be buried underground shall fit the insulated wires entering the spliced joint.

2.4.10 Epoxy Potting Compound

Epoxy potting compound for encapsulating electrical wire splices to be buried underground shall be a two package system made for the purpose.

2.4.11 Backfill Shields

Backfill shields shall consist of approved pipeline wrapping or fiberglass reinforced, coal-tar impregnated tape, or plastic weld caps, specifically made for the purpose.

2.4.12 Electrical Tape

Pressure-sensitive vinyl plastic electrical tape shall conform to UL 510.

2.4.13 Cable Marker Tape

Traceable marker tape shall be manufactured for the purpose and clearly labeled "Cathodic Protection Cable Buried Below".

2.4.14 Electrically Isolating Pipe Joints

Electrically isolating pipe joints for above or below ground use shall be flexible, mechanical pipe couplings of an electrically isolating type consisting of bolted or compression design provided with electrically isolating joint harness if required to provide pull-out strength .

2.4.14.1 Threaded Fittings

Threaded type electrically isolating pipe joints shall have molded plastic screw threads and be used above ground only. Machined plastic screw threads shall not be used.

2.4.14.2 Electrically Isolating Pipe Joints

Electrically isolating pipe joints shall be of a type that is in regular factory production.

2.4.15 Electrically Conductive Couplings

Electrically conductive couplings shall be of a type that has a published maximum electrical resistance rating given in the manufacturer's literature. Cradles and seals shall be of a type that is in regular factory production made for the purpose of electrically isolating the carrier pipe from the casing and preventing the incursion of water into the annular space.

2.4.16 Joint and Continuity Bonds

Bonds shall be provided across joints or any electrically discontinuous connections in the piping, and other pipes and structures with other than welded or threaded joints included in this cathodic protection system. Unless otherwise specified, bonds between structures and across joints in pipe with other than welded or threaded joints shall be with No. 4 AWG stranded copper cable with polyethylene insulation. Bonds between structures shall contain sufficient slack for any anticipated movement between structures. Bonds across pipe joints shall contain a minimum of 4 inches of slack to allow for pipe movement and soil stress. Bonds shall be attached by exothermic welding. Exothermic weld areas shall be insulated with coating compound and approved by the Contracting Officer. Continuity bonds shall be installed as necessary to reduce stray current interference. Additional joint bonding shall be done where determined during construction or testing or as directed. Joint bonding shall include excavation and backfilling. There shall be a minimum of 2 continuity bonds between each structure and other than welded or threaded joints. Electrical continuity shall be tested across joints with other than welded or threaded joints and across metallic portions of sewage lift stations and water booster stations.

2.4.16.1 Resistance Bonds

Resistance bonds shall be adjusted for minimum interference while achieving the criteria of protection. Alternate methods may be used when approved.

2.4.16.2 Stray Current Measurements

Stray current measurements shall be performed as indicated. Alternate methods may be used when approved. The stray current test report shall indicate location of test, type of pipes tested, method of testing, .

2.4.17 Electrical Isolation of Structures

Isolating fittings, including isolating flanges and couplings, shall be installed above ground or in a concrete hand hole. As a minimum, isolating flanges or unions shall be provided at the following locations:

a. Connection of new piping to existing pipes.

b. Pressure piping under floor slab to a building.

Additionally, isolation shall be provided between new pipe lines and foreign pipes that cross the new lines within 10 feet.

PART 3 EXECUTION

3.1 CRITERIA OF PROTECTION

Acceptance criteria for determining the adequacy of protection on a buried pipe shall be in accordance with NACE RP0169, and as specified below.

3.1.1 Iron and Steel

The following method a. shall be used for testing cathodic protection voltages. If more than one method is required, method b. shall be used:

a. A negative voltage of at least minus 850 millivolts as measured between the pipe or specified underground component and a saturated copper-copper sulphate reference electrode contacting the (electrolyte) earth directly over the pipe or specified underground component. Determination of this voltage shall be made with the cathodic protection system in operation. Voltage drops shall be considered for valid interpretation of this voltage measurement. A minimum of minus 850 millivolts "instant off" potential between the structure pipe, tank, or specified underground component being tested and the reference cell shall be achieved over 95 percent of the area of the structure. Adequate number of measurements shall be obtained over the entire structure, pipe, tank, or other metallic component to verify and record achievement of minus 850 millivolts "instant off". This potential shall be obtained over 95 percent of the total metallic area without the "instant off" potential exceeding 1200 millivolts.

b. A minimum polarization voltage shift of 100 millivolts as measured between the pipe and a saturated copper-copper sulphate reference electrode contacting the earth directly over the pipe . This polarization voltage shift shall be determined by interrupting the protective current and measuring the polarization decay. When the protective current is interrupted, an immediate voltage shift will occur. The voltage reading, after the immediate shift, shall be used as the base reading from which to measure polarization decay. Measurements achieving 100 millivolts shall be made over 95 percent of the metallic surface.

3.2 GROUND BED INSTALLATION

3.2.1 Shallow Ground Beds

Shallow ground beds shall contain size and quantity of anodes designed to meet performance criteria of the cathodic protection system at an initial operating current output density not exceeding 50 percent of maximum recommended current output density.

3.2.1.1 Vertically Buried Bare Anodes

Vertically buried bare anodes shall be installed in vertical holes in the ground having a depth, spacing, and location shown. The holes in the ground shall be sufficiently large to provide an annular space around the anode not less than 4 inches. The anodes shall be centered in the hole and backfilled with calcined petroleum coke breeze or metallurgical coke breeze. Backfill shall be compacted.

3.2.1.2 Vertically Buried Canister-Contained Anodes

Vertically buried canister-contained anodes shall be installed in vertical holes in the ground having depth, spacing, and locations shown. The holes in the ground shall be sufficiently larger in diameter than the canisters to facilitate easy lowering into the hole and backfilling. The space between the canister and the wall of the hole shall be completely backfilled with a wet slurry of earth

free of stones.

3.2.1.3 Cable Protection

Positive cable to the ground bed and negative cable to the pipe to be protected shall be buried a minimum depth of 30 inches except where above ground construction utilizing conduit is used.

3.3 MAGNESIUM ANODE INSTALLATION

Installation shall be per the requirements given in 13112A.

3.4 MISCELLANEOUS INSTALLATION

3.4.1 Rectifier Installation

Mounting shall be as shown. Pole or wall mounting shall be equipped with a channel bracket, lifting eyes, and a keyhole at the top.

3.4.2 Wire Connections

3.4.2.1 Wire Splicing

Connecting wire splicing shall be made with copper compression connectors or exothermic welds, following instructions of the manufacturer. Split-bolt type connectors shall not be used.

3.4.2.2 Steel Surfaces

Connections to ferrous pipe shall be made by exothermic weld methods as manufactured by an approved manufacturer for the type of pipe . Electric arc welded connections and other types of welded connections to ferrous pipe and structures shall be approved before use.

3.4.3 Pipe Joints

3.4.3.1 Electrical Continuity

Underground pipe shall be electrically continuous except at places where electrically isolating joints are specified. Pipe joined by means other than welding shall meet the following electrical continuity requirements:

a. Mechanical joints that are not factory designed to provide electrical continuity shall be bonded by installing a metallic bond across the joint. The bonding connections shall be made by the exothermic welding process.

b. Mechanical joints designed to provide electrical continuity may be used.

3.4.3.2 Coating

15060 covers the coating requirements for the stainless steel piping ans shall be followed. Mechanical joints and fittings of either the electrically conductive or insulating type shall be coated with an underground type dielectric coating system. Where external electrical continuity bonds are installed across mechanical joints, bare or exposed metal, welds, bare wire and exposed coupling parts shall be coated with a coating system.

a. Couplings and fittings which have a low profile exterior designed to permit tape coating shall be primed and wrapped with an underground type pipe tape system or two-part epoxy system.

3.4.3.3 Electrical Isolation of Structures

Electrical isolation of structures shall be as follows:

a. Isolating Fittings: Isolating flanges and couplings shall be installed aboveground. Isolating flanges and couplings in lines entering buildings shall be located at least 12 inches above grade or floor level. Pipelines entering buildings either below or above ground shall be electrically isolated from the structure wall with an electrically isolating wall sleeve.

d. Fuel: Electrical isolation shall be provided in each pipe at the building and at the tank as shown.

f. Underground Storage Tanks (UST): Tanks shall be electrically isolated from other metallic structures. Components protected with the tank such as pipes, vents, anchors, and fill pipes shall be bonded to the tank.

3.4.4 Dissimilar Metals

Buried piping of dissimilar metals including new and old steel piping, excepting valves, shall be electrically separated by means of electrically insulating joints at every place of connection. The insulating joint, including the pipes, shall be coated with an underground type dielectric coating for a minimum distance of 10 diameters on each side of the joint.

3.4.5 Ferrous Valves

Dissimilar ferrous valves in a buried ferrous pipeline, including the pipe, shall be coated with an underground type dielectric coating for a minimum distance of 10 diameters on each side of the valve.

3.4.6 Brass or Bronze Valves

Brass or bronze valves shall not be used in a buried ferrous pipeline.

3.4.7 Metal Pipe Junction

If the dissimilar metal pipe junction, including valves, is not buried and is exposed to atmosphere only, the connection or valve, including the pipe, shall be coated with an underground type dielectric coating for a minimum distance of 3 diameters on each side of the junction.

3.4.8 Casing

Where a pipeline is installed in a casing under a roadway or railway, the pipeline shall be electrically isolated from the casing, and the annular space sealed against incursion of water.

3.4.9 Test Stations

Test stations shall be of the type and location shown and shall be curb box mounted. Buried electrically isolating joints shall be provided with test wire connections brought to a test station. Changes in designated location shall have prior approval. Unless otherwise shown, other test stations shall be located as follows:

a. At 1,000 foot intervals or less.

b. Where the pipe or conduit crosses any other metal pipe.

c. At both ends of casings under roadways and railways.

d. Where both ends of an insulating joint are not accessible above ground for testing purposes.

3.5 TESTS AND MEASUREMENTS

3.5.1 Baseline Potentials

Each test and measurement will be witnessed by the Contracting Officer. The Contractor shall notify the Contracting Officer a minimum of 5 working days prior to each test. After backfill of the pipe and anodes is completed, but before the anodes are connected to the pipe , the static potential-to-soil of the pipe shall be measured. The locations of these measurements shall be identical to the locations specified for pipe- to-reference electrode potential measurements.

3.5.2 Isolation Testing

Before the anode system is connected to the pipe , an isolation test shall be made at each isolating joint or fitting. This test shall demonstrate that no metallic contact, or short circuit exists between the two isolated sections of the pipe . Any isolating fittings installed and found to be defective shall be reported to the Contracting Officer.

3.5.2.1 Insulation Checker

A Model 601 insulation checker, as manufactured by "Gas Electronics" or an approved equal, shall be used for isolating joint (flange) electrical testing ing accordance with anufacturer's operating instructions. An isolating joint that is good will read full scale on the meter; if an isolating joint is shorted, the meter pointer will be deflected at near zero on the meter scale. Location of the fault shall be determined from the instructions and the joint shall be repaired. If an isolating joint is located inside a vault, the pipe shall be sleeved with insulator when entering and leaving the vault.

3.5.2.2 Cathodic Protection Meter

A Model B3A2 cathodic protection meter, as manufactured by "M. C. Miller" or an approved equal using the continuity check circuit shall be used for isolating joint (flange) electrical testing. This test shall be performed in addition to the Model 601 insulation checker. Continuity is checked across the isolated joint after the test lead wire is shorted together and the meter adjusted to scale. A full scale deflection indicates the system is shorted at some location. The Model 601 verifies that the particular insulation under test is good and the Model B3A2 verifies that the system is isolated. If the system is shorted, further testing shall be performed to isolate the location of the short.

3.5.3 Anode Output

After the rectifier is energized, the current output of the individual anode leads shall be measured by using an approved method. This may be done with a shunt and MV meter, a low-resistance ammeter, or a clamp-on milliammeter. The total current shall be measured and compared to the sum of all anode currents and to the rectifier output current. If an individual anode output current meets or exceeds the recommended output for that anode, the system shall be turned down or balancing resistors installed. Calculation of the wattage of the resistors shall be sufficient to handle the maximum load which will be encountered on the anode lead. All measurements obtained, the date, time, and locations of all measurements shall be recorded.

3.5.4 Electrode Potential Measurements

Upon completion of the installation and with the entire cathodic protection system in operation, electrode potential measurements shall be made using a copper-copper sulphate reference electrode and a potentiometer-voltmeter, or a direct current voltmeter having an internal resistance (sensitivity) of not less than 10 megohms per volt and a full scale of 10 volts. The locations of these measurements shall be identical to the locations used for baseline potentials. The values obtained and the date, time, and locations of measurements shall be recorded. No less than 8 measurements shall be made over any length of line or component. Additional measurements shall be made at each distribution service riser, with the reference electrode placed directly over the service line.

3.5.5 Location of Measurements

3.5.5.1 Coated Piping or Conduit

For coated piping or conduit, measurements shall be taken from the reference electrode located in contact with the earth, directly over the pipe. Connection to the pipe shall be made at service risers, valves, test leads, or by other means suitable for test purposes. Pipe to soil potential measurements shall be made at intervals not exceeding 50 feet. The Contractor may use a continuous pipe to soil potential profile in lieu of 2.5 ft interval pipe to soil potential measurements. Additional measurements shall be made at each distribution service riser, with the reference electrode placed directly over the service line adjacent to the riser. Potentials shall be plotted versus distance to an approved scale. Locations where potentials do not meet or exceed the criteria shall be identified and reported to the Contracting Officer.

3.5.6 Casing Tests

Before final acceptance of the installation, the electrical separation of carrier pipe from casings shall be tested and any short circuits corrected.

3.5.7 Interference Testing

Before final acceptance of the installation, interference tests shall be made with respect to any foreign pipes in cooperation with the owner of the foreign pipes . A full report of the tests giving all details shall be made.

3.5.8 Holiday Test

Any damage to the protective covering during transit and handling shall be repaired before installation. After field coating and wrapping has been applied, the entire pipe shall be inspected by an electric holiday detector with impressed current in accordance with NACE RP0188 using a full ring, spring type coil electrode. The holiday detector shall be equipped with a bell, buzzer, or other type of audible signal which sounds when a holiday is detected. Holidays in the protective covering shall be repaired upon detection. Occasional checks of holiday detector potential will be made by the Contracting Officer to determine suitability of the detector. Labor, materials, and equipment necessary for conducting the inspection shall be furnished by the Contractor. The coating system shall be inspected for holes, voids, cracks, and other damage during installation.

3.5.9 Recording Measurements

All pipe- to-soil potential measurements including initial potentials where required shall be recorded. The Contractor shall locate, correct and report to Contracting Officer any short circuits to foreign pipes encountered during checkout of the installed cathodic protection system. Pipe- to-soil potential

measurements are required on as many pipes as necessary to determine the extent of protection or to locate short-circuits.

3.6 TRAINING COURSE

The Contractor shall conduct a training course for the operating staff as designated by the Contracting Officer. The training period shall consist of a total of 16 hours of normal working time and shall start after the system is functionally completed but prior to final acceptance tests. The field instructions shall cover all of the items contained in the operating and maintenance instructions, as well as demonstrations of routine maintenance operations, including testing procedures included in the maintenance instructions. At least 14 days prior to date of proposed conduction of the training course, the training course curriculum shall be submitted for approval, along with the proposed training date. Training shall consist of demonstration of test equipment, providing forms for test data and the tolerances which indicate that the system works satisfactorily.

-- End of Section --

SECTION TABLE OF CONTENTS

DIVISION 13 - SPECIAL CONSTRUCTION

SECTION 13125

PRE-ENGINEERED METAL CANOPY

09/02

PART 1 GENERAL

1.1 REFERENCES
1.2 SUBMITTALS
1.3 GENERAL REQUIREMENTS
1.3.1 Canopy Configurations
1.3.2 Qualifications
1.3.2.1 Manufacturer
1.3.2.2 Installer
1.4 DESIGN REQUIREMENTS
1.4.1 Foundations
1.4.2 Structural Members and Connections
1.4.3 Roof Live Loads
1.4.3.1 Uniform Loads
1.4.4 Roof Snow Loads
1.4.5 Wind Loads
1.4.6 Roofing and Siding Design
1.4.7 Grounding and Lightning Protection
1.5 DESIGN ANALYSIS
1.6 DELIVERY AND STORAGE
1.7 WARRANTIES
1.7.1 Weathertightness and Material Warranty

PART 2 PRODUCTS

2.1 FRAMING AND STRUCTURAL MEMBERS
2.2 DECK PANELS (FILL STAND CANOPY)
2.3 FASCIA SYSTEM (FILL STAND CANOPY)
2.4 ACCESSORIES
2.5 GUTTERS (FILL STAND CANOPY)
2.6 DOWNSPOUTS (FILL STAND CANOPY)
2.7 FASTENERS
2.8 SEALANT
2.9 GASKETS AND INSULATING COMPOUNDS
2.10 LIGHTS (FILL STAND CANOPY)
2.11 STANDING SEAM METAL ROOF, GUTTERS AND DOWNSPOUTS (VEHICLE CHECK POINT)
2.12 SHOP PRIMING

PART 3 EXECUTION

3.1 ERECTION
3.1.1 Foundations and Anchor Bolts
3.1.2 Framing Members
3.1.3 Deck, Fascia and Gutter Installation
3.2 FIELD PAINTING

-- End of Section Table of Contents --

SECTION 13125

PRE-ENGINEERED METAL CANOPY
09/02

PART 1 GENERAL

1.1 REFERENCES

The publications listed below form a part of this specification to the extent referenced. The publications are referred to in the text by basic designation only.

AMERICAN INSTITUTE OF STEEL CONSTRUCTION (AISC)

AISC ASD Manual	(1989) Manual of Steel Construction Allowable Stress Design
AISC S342L	(1993) Load and Resistance Factor Design Specification for Structural Steel Buildings

AMERICAN IRON AND STEEL INSTITUTE (AISI)

AISI Cold-Formed Mnl	(1996) Cold-Formed Steel Design Manual

AMERICAN SOCIETY FOR TESTING AND MATERIALS (ASTM)

ASTM A 36/A 36M	(2001) Carbon Structural Steel
ASTM A 325	(2000) Structural Bolts, Steel, Heat Treated, 120/105 ksi Minimum Tensile Strength
ASTM A 500	(1999) Cold-Formed Welded and Seamless Carbon Steel Structural Tubing in Rounds and Shapes
ASTM A 572/A 572M	(2000a) High-Strength Low-Alloy Columbium-Vanadium Structural Steel
ASTM A 653/A 653M	(2000) Steel Sheet, Zinc-Coated (Galvanized) or Zinc-Iron Alloy-Coated (Galvannealed) by the Hot-Dip Process
ASTM A 924/A 924M	(1999) General Requirements for Steel Sheet, Metallic-Coated by the Hot-Dip Process

AMERICAN SOCIETY OF CIVIL ENGINEERS (ASCE)

ASCE 7	(1998) Minimum Design Loads for Buildings and Other Structures

AMERICAN WELDING SOCIETY (AWS)

AWS D1.1	(2000) Structural Welding Code - Steel

1.2 SUBMITTALS

Government approval is required for submittals with a "G" designation; submittals not having a "G" designation are for information only. When used, a designation following the "G" designation identifies the office that will review

the submittal for the Government. The following shall be submitted in accordance with Section 01330 SUBMITTAL PROCEDURES:

SD-02 Shop Drawings

Drawings; G-AE

Detail drawings consisting of catalog cuts, design and erection drawings showing the canopy layout, column spacing, structural members, deck panel and fascia panel installation, footing sizes and anchor bolts.

SD-03 Product Data

Design Analysis; G-AE

Design analysis (canopy and foundations including anchor bolt plans) as one package with the drawings.

Manufacturer's Instructions; G-AE

Manufacturer's literature for individual canopy component systems.

Erection Procedures; G-AE

Manufacturer's erection instruction and erection drawings describing the preparation requirements, assembly sequence, temporary bracing, shoring, and related information necessary for erection of the metal canopy including its structural framework and components.

Qualifications; G-AE

Qualifications of the manufacturer, and qualifications and experience of the canopy erector. A brief list of locations where canopies of similar design have been used shall be included with the detail drawings and shall also include information regarding date of completion, name and address of owner, and how the structure is used.

SD-07 Certificates

Canopy Systems

a. Mill certification for structural bolts, framing steel, roofing and siding, and steel wall liner panels.

b. Warranty certificate. At the completion of the project the Contractor shall furnish signed copies of the 5 year Warranty for Canopy System.

1.3 GENERAL REQUIREMENTS

The Canopy System covered under this specification shall be provided by a single manufacturer and shall include all components and assemblies that form a Canopy except for Standing Seam Metal Roof System. Standing Seam Metal Roof System shall be provided by the Canopy supplier or Standing Seam Metal Roof supplier.

1.3.1 Canopy Configurations

Canopy Geometry shall be as shown on the drawings.

1.3.2 Qualifications

1.3.2.1 Manufacturer

Metal building shall be the product of a recognized Canopy Systems manufacturer who has been in the practice of manufacturing steel Canopies for a period of not less than 5 years. The manufacturer shall be chiefly engaged in the practice of designing and fabricating Canopy systems.

1.3.2.2 Installer

Erector shall have specialized experience in the erection of Canopy systems for a period of at least 3 years. The erector shall furnish temporary guys and bracing where needed for squaring, plumbing, and securing the structural framing against loads acting on the exposed framing, such as wind loads, as well as loads due to erection equipment and erection operation. Structural members shall not be field cut or altered. Welds, abrasions, and surfaces not shop primed or galvanized shall be primed after erection.

1.4 DESIGN REQUIREMENTS

Criteria and definitions shall be in accordance with AISC ASD Manual or AISC S342L and AISI Cold-Formed Mnl, as applicable. Loads and load combinations shall be in accordance with ASCE 7.

1.4.1 Foundations

Foundations shall be designed for an allowable soil bearing pressure of 3000 psf, a minimum bottom of footing depth of 2.5 feet below finish floor elevation, a factor of safety of 1.5 for overturning, sliding and uplift, and a concrete compressive strength as specified in Section 03300 CAST-IN-PLACE STRUCTURAL CONCRETE.

1.4.2 Structural Members and Connections

Structural steel members and their connections shall be designed in accordance with AISC ASD Manual or AISC S342L.

1.4.3 Roof Live Loads

1.4.3.1 Uniform Loads

Uniform roof live loads, including maintenance traffic and construction loads, of 20 psf, shall be determined and applied in accordance with ASCE 7.

1.4.4 Roof Snow Loads

The design roof snow loads, including effects of drifting, shall be determined and applied in accordance with ASCE 7, using a ground snow load of 10 psf and a thermal factor of 1.2.

1.4.5 Wind Loads

Wind pressures shall be computed and applied in accordance with ASCE 7 using a basic wind speed of 100 mph (3 second gust) and exposure C. The minimum design uplift pressure shall be 15 psf.

1.4.6 Roofing and Siding Design

Steel roofing and siding shall be designed in accordance with AISI Cold-Formed Mnl.

1.4.7 Grounding and Lightning Protection

Grounding and lightning protection shall be provided as specified in Section 13100A LIGHTNING PROTECTION SYSTEM.

1.5 DESIGN ANALYSIS

The design analysis shall be the design of a licensed Professional Engineer experienced in design of this work and shall include complete calculations for the building, its components, and the foundations. Formulas and references shall be identified. Assumptions and conclusions shall be explained, and cross-referencing shall be clear. Wind forces on various parts of the structure, both positive and negative pressure, shall be calculated with the controlling pressure summarized. Computer programmed designs shall be accompanied by stress values and a letter of certification, signed by a licensed Professional Engineer, stating the design criteria and procedures used and attesting to the adequacy and accuracy of the design. Computer program output shall be annotated and supplemented with sketches to verify the input and output. Critical load conditions used in the final sizing of the members shall be emphasized. The design analysis shall include the name and office phone number of the designer, who shall function as a point of contact to answer questions during the detail drawing review.

1.6 DELIVERY AND STORAGE

Materials shall be delivered to the site in a dry and undamaged condition and stored out of contact with the ground. Materials other than framing and structural members shall be covered with weathertight coverings and kept dry. Storage accommodations for roofing and siding shall provide good air circulation and protection from surface staining.

1.7 WARRANTIES

The Canopy System, composed of framing and structural members, roof deck panels, fascia, gutters and downspouts, accessories, fasteners, trim, and miscellaneous related items shall be warranted as described below against material and workmanship deficiencies, system deterioration caused by ordinary exposure to the elements and service design loads, leaks and wind uplift damage. Any emergency temporary repairs conducted by the owner shall not negate the warranties.

1.7.1 Weathertightness and Material Warranty

The Canopy System shall be warranted by the Contractor on a no penal sum basis for a period of five years against materials and workmanship deficiencies; system deterioration caused by exposure to the elements and/or inadequate resistance to specified service design loads, water leaks, and wind uplift damage. The Canopy System covered under this warranty shall include, but is not limited to, the following: framing and structural members, roofing and fascia panels and seams, interior or exterior gutters and downspouts, accessories, fasteners, trim, flashings and miscellaneous items such as, connectors, components, and fasteners, and other system components and assemblies installed to provide a weathertight system; and items specified in other sections of these specifications that become part of the canopy system. All material and workmanship deficiencies, system deterioration caused by exposure to the elements and/or inadequate resistance to specified service design loads, water leaks and wind uplift damage shall be repaired as approved by the Contracting Officer. This warranty shall warrant and cover the entire cost of repair or replacement, including all material, labor, and related markups. The Contractor shall supplement this warranty with written warranties from the installer and/or system manufacturer, which shall be submitted along with Contractor's warranty. However, the Contractor is ultimately responsible for this warranty.

PART 2 PRODUCTS

2.1 FRAMING AND STRUCTURAL MEMBERS

Columns shall be fabricated from square hollow structural sections (HSS)conforming to ASTM A 500 Grade B with a minimum size of 10 inch x 10 inch. Column top and base plates shall ASTM A 36/A 36M with a minimum yield strength of 36 ksi. Plates shall have pre-punched or pre-drilled bolt holes. Plates shall be sized for required loads, with a minimum thickness of 1/2 inch for top plates and 3/4 inch for base plates. Gussets shall be used as required. Columns shall be provided with electrical access openings, cover plates, conduits and drains as indicated. Primary roof-framing members including, girders, beams and purlins, shall be Wide flange shapes conforming to ASTM A 36/A 36M or ASTM A 572/A 572M Grade 50. Other roof-framing members (channel, angle, or tees), if used, shall conform to ASTM A 36/A 36M. Flange bracing shall be as required by design. Structural steel plates shall conform to ASTM A 36/A 36M. Structural bolts shall conform to ASTM A 325. All structural steel framing members shall be shop fabricated for field bolted assembly, unless otherwise specified on drawings. Anchor bolts shall have a minimum diameter of 1 1/4" with a minimum embedment of 24". Double nuts and washers shall be provided with each anchor bolt, with one set to be used for leveling column. Galvanized sheet metal templates for setting anchor bolts shall be provided. Templates shall be removed prior to setting columns on anchor bolts. All structural steel framing members shall be cleaned to remove loose mill scale and other foreign matter. After cleaning, all members shall be given one shop coat of red-oxide rust-inhibitive primer. The primer coat thickness shall be a minimum of 1 mil.

2.2 DECK PANELS (FILL STAND CANOPY)

Roof deck panels shall conform to ASTM A 653/A 653M, with a G60 galvanized surface per ASTM A 924/A 924M. Panel profile shall be 3 x 16 or 3 x 12 with a 0.024 inch minmum thickness. Panels shall have a finish side coated with a full coat of white polyester paint baked on over an epoxy primer. A wite wash coat baked on over an epoxy primer shall protect the interior side of the panel. Panels shall be fastened to the bottom flange of the wide flange purlin beams with a screw-type clamp and lock nut system, which requires no "through the panel" fasteners. Deck panels shall not be spliced.

2.3 FASCIA SYSTEM (FILL STAND CANOPY)

Foam core laminated steel panels shall be provided with a 24 gauge G90 galvanized steel front and back with a 2 inch thick core of virgin expanded polystyrene with 1.5 pcf density. Panels shall have a finish side coated with a full coat of polyester paint baked on over an epoxy primer. Color shall be as indicated. Fascia outriggers shall be cold formed 2 x 2 steel angles conforming to ASTM A 653/A 653M Designation CS, Coating Designation G90 per ASTM A 924/A 924Mwith a minimum yield strength of 25 ksi. 2 x 2 x 18 gauge or 2 x 2 x 1/8 inch structural angle shall be used as required by design. Outrigger spacing per design requirements. There shall be no exposed fasteners on exterior or bottom face of fascia panels. Fascia panels shall be protected throughout fabrication and transportation with a factory applied removable film. Vertical seams shall be sealed from backside with angle closure attached by screws. Twenty four gauge flashing shall be used as required by design.

2.4 ACCESSORIES

Flashing, trim, metal closure strips and curbs, fascia, caps, diverters, and similar metal accessories shall be the manufacturer's standard products. Exposed metal accessories shall be finished to match the building finish. Molded closure strips shall be bituminous-saturated fiber, closed-cell or solid-cell synthetic rubber or neoprene, or polyvinyl chloride premolded to match configuration of the roofing or fascia and shall not absorb or retain water.

2.5 GUTTERS (FILL STAND CANOPY)

Gutter shall conform to ASTM A 653/A 653M Grade 40 steel, with a G60 galvanized

surface per ASTM A 924/A 924M. Profile shall be 14-inch wide x 4-inch deep, 24 gauge thick. Gutters shall have a finish side coated with a full coat of polyester paint baked on over an epoxy primer. A white wash coat baked on over an epoxy primer shall protect the interior side of the gutter. Gutter leaders to column drain shall be leader cover (dry leader) or an 8 inch wide tapered (4 inch to 6 inch deep) 24 gauge steel leader (wet leader). Larger gutters shall be used where required for proper drainage.

2.6 DOWNSPOUTS (FILL STAND CANOPY)

Internal downspouts shall be 3 inch diameter PVC with couplings provided at gutter leader attachment location and at base of column where attachment to site drainage system is required. Larger drains shall be used where required for proper drainage. Collector boxes may be provided on columns where downspout is not located on same side of column as the gutter leader comes into. Collector boxes shall be fabricated from galvanized steel conforming to ASTM A 653/A 653M Designation CS, Coating Designation G90 with a minimum thickness of 0.045 inch.

2.7 FASTENERS

Fasteners shall be as recommended by the manufacturer to meet the design strength requirements. Structural bolts (ASTM A325) required for all field bolted connections shall conform to ASTM A 325. Cadmium plated self-drilling metal screws shall be provided for all sheet metal connections. Deck panel to beam clips shall be provided to attach all deck pans to structural steel. 1/8-inch diameter pop-rivets shall be provided as required by design.

2.8 SEALANT

Sealant shall be an elastomeric type containing no oil or asphalt. All exposed joints shall be sealed with a high-quality white silicone caulk. and shall cure to a rubber like consistency. Non exposed joints shall be sealed with white or bronze polyurethane sealant. Other sealant such as Black Mastic, strip caulk or double-sided tape shall be used as required by design.

2.9 GASKETS AND INSULATING COMPOUNDS

Gaskets and insulating compounds shall be nonabsorptive and suitable for insulating contact points of incompatible materials. Insulating compounds shall be nonrunning after drying.

2.10 LIGHTS (FILL STAND CANOPY)

The lights for the canopy shall be surface mounted on the deck. The lights shall be 175 watt metal halide with an prismatic tempered lens. The lighting level under the canopy shall be an average of 5 footcandles. The lights shall be suitable for outdoor operation. The lights shall be be controled by a north facing photocell located on the canopy. There shall be an override switch located in the filterbuilding that will allow the lights to be turned on or off regardless of the indication from the photocell The lights and associated wiring shall meet specifications as outlined in Section 16415A ELECTRICAL WORK, INTERIOR.

2.11 STANDING SEAM METAL ROOF, GUTTERS AND DOWNSPOUTS (VEHICLE CHECK POINT)

Standing Seam Metal Roof, Gutters, and Downspouts for the Vehicle Check Point Canopy shall be in accordance with Section 07416 STRUCTURAL STANDING SEAM METAL ROOF (SSSMR) SYSTEM.

2.12 SHOP PRIMING

Ferrous surfaces shall be cleaned of oil, grease, loose rust, loose mill scale, and other foreign substances and shop primed. Primer coating shall be in accordance with the manufacturer's standard system.

PART 3 EXECUTION

3.1 ERECTION

Dissimilar materials which are not compatible when contacting each other shall be insulated from each other by means of gaskets or insulating compounds. Improper or mislocated drill holes in panels shall be plugged with an oversize screw fastener and gasketed washer; however, panels with an excess of such holes or with such holes in critical locations shall not be used. Exposed surfaces shall be kept clean and free from sealant, metal cuttings, excess material from thermal cutting, and other foreign materials. Exposed surfaces which have been thermally cut shall be finished smooth within a tolerance of 1/8 inch. Stained, discolored or damaged sheets shall be removed from the site. Welding of steel shall conform to AWS D1.1.

3.1.1 Foundations and Anchor Bolts

Concrete work is specified in Section 03300 CAST-IN-PLACE STRUCTURAL CONCRETE. Footings shall be installed in accordance with approved shop drawings. Anchor bolts and templates shall be shipped to owner prior to placing canopy footings. Anchor bolts shall be accurately set by template while the concrete is in a plastic state. Anchor bolts set into the footings shall be protected during the placement of the footings and until the canopy is ready for erection.

3.1.2 Framing Members

Structural steel shall be set plumb, square and level in accordance with Erection Drawings provided with shipment. Erection of structural steel shall be in accordance with the latest AISC Specifications and Code of Standard Practice. All structural bolts shall be tightened by the turn-of-the-nut method as specified in the latest RCSC Specification for Structural Joints Using ASTM A 325 or ASTM A 490 Bolts. Onsite flame cutting of framing members, with the exception of small access holes in structural beam or column webs, will not be permitted. Members shall be accurately spaced to assure proper fitting of panels. As erection progresses, the work shall be securely fastened to resist the dead load and wind and erection stresses.

3.1.3 Deck, Fascia and Gutter Installation

Deck, fascia, and gutter systems, as well as other accessories shall be assembled in accordance with Erection
Drawings provided with shipment.

3.2 FIELD PAINTING

Immediately upon detection, abraded or corroded spots on shop-painted surfaces shall be wire brushed and touched up with the same material used for the shop coat. Shop-primed ferrous surfaces exposed on the outside of the building shall be painted with two coats of an approved exterior enamel. Factory color finished surfaces shall be touched up as necessary with the manufacturer's recommended touch-up paint.

-- End of Section --

SECTION TABLE OF CONTENTS

DIVISION 13 - SPECIAL CONSTRUCTION

SECTION 13280A

ASBESTOS ABATEMENT

11/01

PART 1 GENERAL

1.1 REFERENCES
1.2 DEFINITIONS
1.3 DESCRIPTION OF WORK
1.3.1 Abatement Work Tasks
1.3.2 Unexpected Discovery of Asbestos
1.4 SUBMITTALS
1.5 QUALIFICATIONS
1.5.1 Written Qualifications and Organization Report
1.5.2 Specific Requirements
1.6 REGULATORY REQUIREMENTS
1.7 SAFETY AND HEALTH PROGRAM AND PLANS
1.7.1 Asbestos Hazard Abatement Plan Appendix
1.7.2 Activity Hazard Analyses Appendix
1.8 PRECONSTRUCTION CONFERENCE AND ONSITE SAFETY
1.9 SECURITY
1.10 MEDICAL REQUIREMENTS
1.10.1 Medical Examinations
1.10.1.1 Information Provided to the Physician
1.10.1.2 Written Medical Opinion
1.10.2 Medical and Exposure Records
1.11 TRAINING PROGRAM
1.11.1 General Training Requirements
1.11.2 Project Specific Training
1.12 RESPIRATORY PROTECTION PROGRAM
1.12.1 Respiratory Fit Testing
1.12.2 Respirator Selection and Use Requirements
1.12.3 Class I Work
1.12.4 Class II and III Work
1.12.5 Sanitation
1.13 HAZARD COMMUNICATION PROGRAM
1.14 LICENSES, PERMITS AND NOTIFICATIONS
1.14.1 General Legal Requirements
1.14.2 Litigation and Notification
1.15 PERSONAL PROTECTIVE EQUIPMENT
1.15.1 Respirators
1.15.2 Whole Body Protection
1.15.2.1 Coveralls
1.15.2.2 NOT USED
1.15.2.3 Work Clothing
1.15.2.4 Gloves
1.15.2.5 Foot Coverings
1.15.2.6 Head Covering
1.15.2.7 Protective Eye Wear
1.16 HYGIENE FACILITIES AND PRACTICES
1.16.1 Shower Facilities
1.16.2 3-Stage Decontamination Area
1.16.3 Load-Out Unit
1.16.4 Single Stage Decontamination Area

1.16.5 NOT USED
1.16.6 Decontamination Area Entry Procedures
1.16.7 Decontamination Area Exit Procedures
1.16.8 Lunch Areas
1.16.9 Smoking
1.17 REGULATED AREAS
1.18 WARNING SIGNS AND TAPE
1.19 WARNING LABELS
1.20 LOCAL EXHAUST VENTILATION
1.21 TOOLS
1.22 RENTAL EQUIPMENT
1.23 AIR MONITORING EQUIPMENT
1.24 EXPENDABLE SUPPLIES
1.24.1 Glovebag
1.24.2 Duct Tape
1.24.3 Disposal Containers
1.24.4 Disposal Bags
1.24.5 NOT USED
1.24.6 Cardboard Boxes
1.24.7 Sheet Plastic
1.24.8 Amended Water
1.24.9 Mastic Removing Solvent
1.24.10 Leak-tight Wrapping
1.25 MISCELLANEOUS ITEMS

PART 2 PRODUCTS

2.1 NOT USED
2.2 NOT USED
2.3 RECYCLABLE MATERIALS

PART 3 EXECUTION

3.1 GENERAL REQUIREMENTS
3.2 PROTECTION OF ADJACENT WORK OR AREAS TO REMAIN
3.3 OBJECTS
3.3.1 Removal of Mobile Objects
3.3.2 NOT USED
3.4 BUILDING VENTILATION SYSTEM AND CRITICAL BARRIERS
3.5 PRECLEANING
3.6 METHODS OF COMPLIANCE
3.6.1 Mandated Practices
3.6.2 Control Methods
3.6.3 Unacceptable Practices
3.6.4 Class I Work Procedures
3.6.5 Specific Control Methods for Class I Work
3.6.5.1 NOT USED
3.6.5.2 Glovebag Systems
3.6.5.3 Mini-Enclosures
3.6.5.4 Wrap and Cut Operation
3.6.6 NOT USED
3.6.7 NOT USED
3.6.8 NOT USED
3.6.9 NOT USED
3.6.10 Alternative Methods for Asphaltic Wrap
3.6.11 Cleaning After Asbestos Removal
3.6.12 Class I Asbestos Work Response Action Detail Sheets
3.6.13 Class II Asbestos Work Response Action Detail Sheets
3.7 FINAL CLEANING AND VISUAL INSPECTION
3.8 NOT USED
3.9 EXPOSURE ASSESSMENT AND AIR MONITORING
3.9.1 General Requirements For Exposure
3.9.2 Initial Exposure Assessment

3.9.3 Negative Exposure Assessment
3.9.4 NOT USED
3.9.5 Preabatement Environmental Air Monitoring
3.9.6 Environmental Air Monitoring During Abatement
3.9.7 Final Clearance Air Monitoring
3.9.7.1 Final Clearance Requirements, NIOSH PCM Method
3.9.7.2 NOT USED
3.9.7.3 Air Clearance Failure
3.9.8 Air-Monitoring Results and Documentation
3.10 CLEARANCE CERTIFICATION
3.11 CLEANUP AND DISPOSAL
3.11.1 Title to ACM Materials
3.11.2 Collection and Disposal of Asbestos
3.11.3 NOT USED
3.11.4 Weigh Bill and Delivery Tickets
3.11.5 Asbestos Waste Shipment Record

-- End of Section Table of Contents --

SECTION 13280A

ASBESTOS ABATEMENT
11/01

PART 1 GENERAL

Attachments:

Set-Up Detail and Response Action Detail Sheets: 1, 9A, 9B, 9C, 10, 11, 12, 13, 14, 15, 19, 22, 23, 45, 86, 87, 88, 89, 94, 101 and 104

1.1 REFERENCES

The publications listed below form a part of this specification to the extent referenced. The publications are referred to in the text by basic designation only.

AMERICAN NATIONAL STANDARDS INSTITUTE (ANSI)

ANSI Z87.1	(1989; Errata; Z87.1a) Occupational and Educational Eye and Face Protection
ANSI Z88.2	(1992) Respiratory Protection
ANSI Z9.2	(1979; R 1991) Fundamentals Governing the Design and Operation of Local Exhaust Systems

AMERICAN SOCIETY FOR TESTING AND MATERIALS (ASTM)

ASTM D 1331	(1989; R 1995) Surface and Interfacial Tension of Solutions of Surface-Active Agents
ASTM D 4397	(1996) Polyethylene Sheeting for Construction, Industrial, and Agricultural Applications
ASTM E 1368	(2000) Visual Inspection of Asbestos Abatement Projects

COMPRESSED GAS ASSOCIATION (CGA)

CGA G-7	(1990) Compressed Air for Human Respiration
CGA G-7.1	(1997) Commodity Specification for Air

NATIONAL INSTITUTE FOR OCCUPATIONAL SAFETY AND HEALTH (NIOSH)

NIOSH Pub No. 84-100	(1984; Supple 1985, 1987, 1988 & 1990) NIOSH Manual of Analytical Methods

U.S. ARMY CORPS OF ENGINEERS (USACE)

EM 385-1-1	(1996 or most recent) U.S. Army Corps of Engineers Safety and Health Requirements Manual

U.S. ENVIRONMENTAL PROTECTION AGENCY (EPA)

EPA 340/1-90/018	(1990) Asbestos/NESHAP Regulated Asbestos Containing Materials Guidance

EPA 340/1-90/019	(1990) Asbestos/NESHAP Adequately Wet Guidance
EPA 560/5-85-024	(1985) Guidance for Controlling Asbestos-Containing Materials in Buildings

U.S. NATIONAL ARCHIVES AND RECORDS ADMINISTRATION (NARA)

29 CFR 1910	Occupational Safety and Health Standards
29 CFR 1926	Safety and Health Regulations for Construction
40 CFR 61	National Emission Standards for Hazardous Air Pollutants
40 CFR 763	Asbestos
42 CFR 84	Approval of Respiratory Protective Devices
49 CFR 107	Hazardous Materials Program Procedures
49 CFR 171	General Information, Regulations, and Definitions
49 CFR 172	Hazardous Materials Table, Special Provisions, Hazardous Materials Communications, Emergency Response Information, and Training Requirements
49 CFR 173	Shippers - General Requirements for Shipments and Packagings

UNDERWRITERS LABORATORIES (UL)

UL 586	(1996; Rev thru Aug 1999) High-Efficiency, Particulate, Air Filter Units

NORTH CAROLINA ADMINISTRATIVE CODE (NCAC)

NCAC Title 15	(Chapter 19, Subchapter 19C, Section .0600) Asbestos Hazard Management Program

1.2 DEFINITIONS

a. Adequately Wet: A term defined in 40 CFR 61, Subpart M, and EPA 340/1-90/019 meaning to sufficiently mix or penetrate with liquid to prevent the release of particulate. If visible emissions are observed coming from asbestos-containing material (ACM), then that material has not been adequately wetted. However, the absence of visible emissions is not sufficient evidence of being adequately wetted.

b. Aggressive Method: Removal or disturbance of building material by sanding, abrading, grinding, or other method that breaks, crumbles, or disintegrates intact asbestos-containing material (ACM).

c. Amended Water: Water containing a wetting agent or surfactant with a surface tension of at least 29 dynes per square centimeter when tested in accordance with ASTM D 1331.

d. Asbestos: Asbestos includes chrysotile, amosite, crocidolite, tremolite asbestos, anthophylite asbestos, actinolite asbestos, and any of these minerals that have been chemically treated and/or altered.

e. Asbestos-Containing Material (ACM): Any materials containing more than one percent asbestos.

f. Asbestos Fiber: A particulate form of asbestos, 5 micrometers or longer, with a length-to-width ratio of at least 3 to 1.

g. Authorized Person: Any person authorized by the Contractor and required by work duties to be present in the regulated areas.

h. Building Inspector: Individual who inspects buildings for asbestos and has EPA Model Accreditation Plan (MAP) "Building Inspector" training; accreditation required by 40 CFR 763, Subpart E, Appendix C.

i. Certified Industrial Hygienist (CIH): An Industrial Hygienist certified in the practice of industrial hygiene by the American Board of Industrial Hygiene.

j. Class I Asbestos Work: Activities defined by OSHA involving the removal of thermal system insulation (TSI) and surfacing ACM.

k. Class II Asbestos Work: Activities defined by OSHA involving the removal of ACM which is not thermal system insulation or surfacing material. This includes, but is not limited to, the removal of asbestos - containing wallboard, floor tile and sheeting, roofing and siding shingles, and construction mastic. Certain "incidental" roofing materials such as mastic, flashing and cements when they are still intact are excluded from Class II asbestos work. Removal of small amounts of these materials which would fit into a glovebag may be classified as a Class III job.

l. Class III Asbestos Work: Activities defined by OSHA that involve repair and maintenance operations, where ACM, including TSI and surfacing ACM, is likely to be disturbed. Operations may include drilling, abrading, cutting a hole, cable pulling, crawling through tunnels or attics and spaces above the ceiling, where asbestos is actively disturbed or asbestos-containing debris is actively disturbed.

m. Class IV Asbestos Work: Maintenance and custodial construction activities during which employees contact but do not disturb ACM and activities to clean-up dust, waste and debris resulting from Class I, II, and III activities. This may include dusting surfaces where ACM waste and debris and accompanying dust exists and cleaning up loose ACM debris from TSI or surfacing ACM following construction.

n. Clean room: An uncontaminated room having facilities for the storage of employees' street clothing and uncontaminated materials and equipment.

o. Competent Person: In addition to the definition in 29 CFR 1926, Section .32(f), a person who is capable of identifying existing asbestos hazards as defined in 29 CFR 1926, Section .1101, selecting the appropriate control strategy, has the authority to take prompt corrective measures to eliminate them and has EPA Model Accreditation Plan (MAP) "Contractor/Supervisor" training; accreditation required by 40 CFR 763, Subpart E, Appendix C.

p. Contractor/Supervisor: Individual who supervises asbestos abatement work and has EPA Model Accreditation Plan "Contractor/Supervisor" training; accreditation required by 40 CFR 763, Subpart E, Appendix C.

q. Critical Barrier: One or more layers of plastic sealed over all openings into a regulated area or any other similarly placed physical barrier sufficient to prevent airborne asbestos in a regulated area from migrating to an adjacent area.

r. Decontamination Area: An enclosed area adjacent and connected to the regulated area and consisting of an equipment room, shower area, and clean room, which is used for the decontamination of workers, materials, and equipment that are contaminated with asbestos.

s. Demolition: The wrecking or taking out of any load-supporting structural member and any related razing, removing, or stripping of asbestos products.

t. Disposal Bag: A 6 mil thick, leak-tight plastic bag, pre-labeled in accordance with 29 CFR 1926, Section .1101, used for transporting asbestos waste from containment to disposal site.

u. Disturbance: Activities that disrupt the matrix of ACM, crumble or pulverize ACM, or generate visible debris from ACM. Disturbance includes cutting away small amounts of ACM, no greater than the amount which can be contained in 1 standard sized glovebag or waste bag, not larger than 60 inches in length and width in order to access a building component.

v. Equipment Room or Area: An area adjacent to the regulated area used for the decontamination of employees and their equipment.

w. Employee Exposure: That exposure to airborne asbestos that would occur if the employee were not using respiratory protective equipment.

x. Fiber: A fibrous particulate, 5 micrometers or longer, with a length to width ratio of at least 3 to 1.

y. Friable ACM: A term defined in 40 CFR 61, Subpart M and EPA 340/1-90/018 meaning any material which contains more than 1 percent asbestos, as determined using the method specified in 40 CFR 763, Subpart E, Appendix A, Section 1, Polarized Light Microscopy (PLM), that when dry, can be crumbled, pulverized, or reduced to powder by hand pressure. If the asbestos content is less than 10 percent, as determined by a method other than point counting by PLM, the asbestos content is verified by point counting using PLM.

z. Glovebag: Not more than a 60 by 60 inch impervious plastic bag-like enclosure affixed around an asbestos-containing material, with glove-like appendages through which material and tools may be handled.

aa. High-Efficiency Particulate Air (HEPA) Filter: A filter capable of trapping and retaining at least 99.97 percent of all mono-dispersed particles of 0.3 micrometers in diameter.

bb. Homogeneous Area: An area of surfacing material or thermal system insulation that is uniform in color and texture.

cc. Industrial Hygienist: A professional qualified by education, training, and experience to anticipate, recognize, evaluate, and develop controls for occupational health hazards.

dd. Intact: ACM which has not crumbled, been pulverized, or otherwise deteriorated so that the asbestos is no longer likely to be bound with its matrix. Removal of "intact" asphaltic, resinous, cementitious products does not render the ACM non-intact simply by being separated into smaller pieces.

ee. Model Accreditation Plan (MAP): USEPA training accreditation requirements for persons who work with asbestos as specified in 40 CFR 763, Subpart E, Appendix C.

ff. Modification: A changed or altered procedure, material or component of a control system, which replaces a procedure, material or component of a required system.

gg. Negative Exposure Assessment: A demonstration by the Contractor to show that employee exposure during an operation is expected to be consistently below the OSHA Permissible Exposure Limits (PELs).

hh. NESHAP: National Emission Standards for Hazardous Air Pollutants. The USEPA NESHAP regulation for asbestos is at 40 CFR 61, Subpart M.

ii. Nonfriable ACM: A NESHAP term defined in 40 CFR 61, Subpart M and EPA 340/1-90/018 meaning any material containing more than 1 percent asbestos, as determined using the method specified in 40 CFR 763, Subpart E, Appendix A, Section 1, Polarized Light Microscopy, that, when dry, cannot be crumbled, pulverized or reduced to powder by hand pressure.

jj. Nonfriable ACM (Category I): A NESHAP term defined in 40 CFR 61, Subpart E and EPA 340/1-90/018 meaning asbestos-containing packings, gaskets, resilient floor covering, and asphalt roofing products containing more than 1 percent asbestos as determined using the method specified in 40 CFR 763, Subpart F, Appendix A, Section 1, Polarized Light Microscopy.

kk. Nonfriable ACM (Category II): A NESHAP term defined in 40 CFR 61, Subpart E and EPA 340/1-90/018 meaning any material, excluding Category I nonfriable ACM, containing more than 1 percent asbestos, as determined using the methods specified in 40 CFR 763, Subpart F, Appendix A, Section 1, Polarized Light Microscopy, that when dry, cannot be crumbled, pulverized, or reduced to powder by hand pressure.

ll. Permissible Exposure Limits (PELs):

(1) PEL-Time weighted average(TWA): Concentration of asbestos not in excess of 0.1 fibers per cubic centimeter of air (f/cc) as an 8 hour time weighted average (TWA), as determined by the method prescribed in 29 CFR 1926, Section .1101, Appendix A, or the current version of NIOSH Pub No. 84-100 analytical method 7400.

(2) PEL-Excursion Limit: An airborne concentration of asbestos not in excess of 1.0 f/cc of air as averaged over a sampling period of 30 minutes as determined by the method prescribed in 29 CFR 1926, Section .1101, Appendix A, or the current version of NIOSH Pub No. 84-100 analytical method 7400.

mm. Regulated Area: An OSHA term defined in 29 CFR 1926, Section .1101 meaning an area established by the Contractor to demarcate areas where Class I, II, and III asbestos work is conducted; also any adjoining area where debris and waste from such asbestos work accumulate; and an area within which airborne concentrations of asbestos exceed, or there is a reasonable possibility they may exceed, the permissible exposure limit.

nn. Removal: All operations where ACM is taken out or stripped from structures or substrates, and includes demolition operations.

oo. Repair: Overhauling, rebuilding, reconstructing, or reconditioning of structures or substrates, including encapsulation or other repair of ACM attached to structures or substrates. If the amount of asbestos so "disturbed" cannot be contained in 1 standard glovebag or waste bag, Class I precautions are required.

pp. Spills/Emergency Cleanups: Cleanup of sizable amounts of asbestos waste and debris which has occurred, for example, when water damage occurs in a building, and sizable amounts of ACM are dislodged. A Competent Person evaluates the site and ACM to be handled, and based on the type, condition and extent of the dislodged material, classifies the cleanup as Class I, II, or III. Only if the material was intact and the cleanup involves mere contact of ACM, rather than disturbance, could there be a Class IV classification.

qq. Surfacing ACM: Asbestos-containing material which contains more than 1% asbestos and is sprayed-on, troweled-on, or otherwise applied to surfaces, such as acoustical plaster on ceilings and fireproofing materials on structural members, or other materials on surfaces for acoustical, fireproofing, or other purposes.

rr. Thermal system insulation (TSI) ACM: ACM which contains more than 1% asbestos and is applied to pipes, fittings, boilers, breeching, tanks, ducts, or other interior structural components to prevent heat loss or gain or water condensation.

ss. Transite: A generic name for asbestos cement wallboard and pipe.

tt. Worker: Individual (not designated as the Competent Person or a supervisor) who performs asbestos work and has completed asbestos worker training required by 29 CFR 1926, Section .1101, to include EPA Model Accreditation Plan (MAP) "Worker" training; accreditation required by 40 CFR 763, Subpart E, Appendix C, if required by the OSHA Class of work to be performed or by the state where the work is to be performed.

1.3 DESCRIPTION OF WORK

The work covered by this section includes the removal of asbestos-containing materials (ACM) which could be encountered during demolition activities associated with Bldg 805 and the removal of pipeline and describes procedures and equipment required to protect workers and occupants of the regulated area from contact with airborne asbestos fibers and ACM dust and debris. Activities could include OSHA Class I and Class IIwork operations involving ACM. The work also includes containment, storage, transportation and disposal of the generated ACM wastes. More specific operational procedures shall be detailed in the required Accident Prevention Plan and its subcomponents, the Asbestos Hazard Abatement Plan and Activity Hazard Analyses required in paragraph SAFETY AND HEALTH PROGRAM AND PLANS.

1.3.1 Abatement Work Tasks

The specific ACM to be abated could include thermal insulation or pipe insulation located in the generator room of Bldg 805 as well as any pipeline asphaltic wrap.

1.3.2 Unexpected Discovery of Asbestos

For any previously untested building components suspected to contain asbestos and located in areas impacted by the work, the Contractor shall notify the Contracting Officer (CO) who will have the option of ordering up to six (6) bulk samples to be obtained at the Contractor's expense and delivered to a laboratory accredited under the National Institute of Standards and Technology (NIST) "National Voluntary Laboratory Accreditation Program (NVLAP)" and analyzed by PLM at no additional cost to the Government. Any additional components identified as ACM that have been approved by the Contracting Officer for removal shall be removed by the Contractor and will be paid for by an equitable adjustment to the contract price under the CONTRACT CLAUSE titled "changes". Sampling activities undertaken to determine the presence of

additional ACM shall be conducted by personnel who have successfully completed the EPA Model Accreditation Plan (MAP) "Building Inspector" training course required by 40 CFR 763, Subpart E, Appendix C.

1.4 SUBMITTALS

Government approval is required for submittals with a "G" designation; submittals not having a "G" designation are for information only. When used, a designation following the "G" designation identifies the office that will review the submittal for the Government. The following shall be submitted in accordance with Section 01330 SUBMITTAL PROCEDURES:

SD-03 Product Data

Respiratory Protection Program; G-RE

Records of the respirator program.

Cleanup and Disposal; G-RE

Waste shipment records. Weigh bills and delivery tickets shall be furnished for information only.

Detailed Drawings; G-RE

Descriptions, detail project drawings, and site layout to include worksite containment area techniques as prescribed on applicable SET-UP DETAIL SHEETS, local exhaust ventilation system locations, decontamination units and load-out units, other temporary waste storage facility, access tunnels, location of temporary utilities (electrical, water, sewer) and boundaries of each regulated area.

Materials and Equipment; G-RE

Manufacturer's catalog data for all materials and equipment to be used in the work, including brand name, model, capacity, performance characteristics and any other pertinent information. Test results and certificates from the manufacturer of encapsulants substantiating compliance with performance requirements of this specification. Material Safety Data Sheets for all chemicals to be used onsite in the same format as implemented in the Contractor's HAZARD COMMUNICATION PROGRAM. Data shall include, but shall not be limited to, the following items:

a. High Efficiency Filtered Air (HEPA) local exhaust equipment

b. Vacuum cleaning equipment

c. Air monitoring equipment

d. Respirators

e. Personal protective clothing and equipment

f. Duct Tape

g. Disposal Containers

h. Sheet Plastic

i. Wetting Agent

i. Prefabricated Decontamination Unit

j. Other items

k. Material Safety Data Sheets (for all chemicals proposed)

Accident Prevention Plan; G-RE

The site-specific written plan to be implemented by the Contractor, including the Asbestos Hazard Abatement Plan. See SECTION 01400 SPECIAL SAFETY REQUIREMENTS

Qualifications; G-RE

A written report providing evidence of qualifications for personnel, facilities and equipment assigned to the work.

Training Program;

A copy of the written project site-specific training material as indicated in 29 CFR 1926, Section .1101 that will be used to train onsite employees. The training document shall be signed by the Contractor's Designated IH and Competent Person.

Medical Requirements;

Physician's written opinion.

Encapsulants;

Certificates stating that encapsulants meet the applicable specified performance requirements.

SD-06 Test Reports

Exposure Assessment and Air Monitoring; G-RE

Initial exposure assessments, negative exposure assessments, air-monitoring results and documentation.

Licenses, Permits and Notifications; G-RE

Licenses, permits, and notifications.

SD-07 Certificates

Vacuum, Filtrationand Ventilation Equipment;

Manufacturer's certifications showing compliance with ANSI Z9.2 for:

a. Vacuums.

b. Water filtration equipment.

c. Ventilation equipment.

d. Other equipment required to contain airborne asbestos fibers.

1.5 QUALIFICATIONS

1.5.1 Written Qualifications and Organization Report

The Contractor shall furnish a written qualifications and organization report providing evidence of qualifications of the Contractor, Contractor's Project

Supervisor, Designated Competent Person, supervisors and workers; Designated IH (person assigned to project and firm name); independent testing laboratory (including name of firm that will perform analyses); all subcontractors to be used including disposal transportation and disposal facility firms; and any others assigned to perform asbestos abatement and support activities. The report shall include an organization chart showing the Contractor's staff organization for this project by name and title, chain of command and reporting relationship with all subcontractors. The report shall be signed by the Contractor, the Contractor's onsite project manager, Designated Competent Person, Designated IH, designated testing laboratory and the principals of all subcontractors to be used. The Contractor shall include the following statement in the report: "By signing this report I certify that the personnel I am responsible for during the course of this project fully understand the contents of 29 CFR 1926, Section .1101, 40 CFR 61, Subpart M, and the federal, state and local requirements specified in paragraph SAFETY AND HEALTH PROGRAM AND PLANS for those asbestos abatement activities that they will be involved in."

1.5.2 Specific Requirements

The Contractor shall designate in writing, personnel meeting the following qualifications:

a. Designated Competent Person: The name, address, telephone number, and resume of the Contractor's Designated Competent Person shall be provided. Evidence that the full-time Designated Competent Person is qualified in accordance with 29 CFR 1926, Sections .32 and .1101, has EPA Model Accreditation Plan (MAP) "Contractor/Supervisor" training accreditation required by 40 CFR 763, Subpart E, Appendix C, and is experienced in the administration and supervision of asbestos abatement projects, including exposure assessment and monitoring, work practices, abatement methods, protective measures for personnel, setting up and inspecting asbestos abatement work areas, evaluating the integrity of containment barriers, placement and operation of local exhaust systems, ACM generated waste containment and disposal procedures, decontamination units installation and maintenance requirements, site safety and health requirements, notification of other employees onsite, etc. The duties of the Competent Person shall include the following: controlling entry to and exit from the regulated area; supervising any employee exposure monitoring required by 29 CFR 1926, Section .1101; ensuring that all employees working within a regulated area wear the appropriate personal protective equipment (PPE), are trained in the use of appropriate methods of exposure control, and use the hygiene facilities and decontamination procedures specified; and ensuring that engineering controls in use are in proper operating conditions and are functioning properly. The Designated Competent Person shall be responsible for compliance with applicable federal, state and local requirements, the Contractor's Accident Prevention Plan and Asbestos Hazard Abatement Plan. The Designated Competent Person shall provide, and the Contractor shall submit, the "Contractor/Supervisor" course completion certificate and the most recent certificate for required refresher training with the employee "Certificate of Worker Acknowledgment" required by this paragraph. The Contractor shall submit evidence that this person has a minimum of 2 years of on-the-job asbestos abatement experience relevant to OSHA competent person requirements. The Designated Competent Person shall be onsite at all times during the conduct of this project.

b. Project and Other Supervisors: The Contractor shall provide the name, address, telephone number, and resume of the Project Supervisor and other supervisors who have responsibility to implement the Accident Prevention Plan, including the Asbestos Hazard Abatement Plan and Activity Hazard Analyses, the authority to direct work performed under this contract and verify compliance, and have EPA Model Accreditation

Plan (MAP) "Contractor/Supervisor" training accreditation required by 40 CFR 763, Subpart E, Appendix C. The Project Supervisor and other supervisors shall provide, and the Contractor shall submit, the "Contractor/Supervisor" course completion certificate and the most recent certificate for required refresher training with the employee "Certificate of Worker Acknowledgment" required by this paragraph. The Contractor shall submit evidence that the Project Supervisor has a minimum of 2 years of on-the-job asbestos abatement experience relevant to project supervisor responsibilities and the other supervisors have a minimum of 1 year on-the-job asbestos abatement experience commensurate with the responsibilities they will have on this project.

c. Designated Industrial Hygienist: The Contractor shall provide the name, address, telephone number, resume and other information specified below for the Industrial Hygienist (IH) selected to prepare the Contractor's Asbestos Hazard Abatement Plan, prepare and perform training, direct air monitoring and assist the Contractor's Competent Person in implementing and ensuring that safety and health requirements are complied with during the performance of all required work. The Designated IH shall be a person who is board certified in the practice of industrial hygiene or board eligible (meets all education and experience requirements) as determined and documented by the American Board of Industrial Hygiene (ABIH), has EPA Model Accreditation Plan (MAP) "Contractor/Supervisor" training accreditation required by 40 CFR 763, Subpart E, Appendix C, and has a minimum of 2 years of comprehensive experience in planning and overseeing asbestos abatement activities. The Designated IH shall provide, and the Contractor shall submit, the "Contractor/Supervisor" course completion certificate and the most recent certificate for required refresher training with the employee "Certificate of Worker Acknowledgment" required by this paragraph. The Designated IH shall be completely independent from the Contractor according to federal, state, or local regulations; that is, shall not be a Contractor's employee or be an employee or principal of a firm in a business relationship with the Contractor negating such independent status. A copy of the Designated IH's current valid ABIH certification or confirmation of eligibility in writing from the ABIH shall be included. The Designated IH shall visit the site initially and as needed for the duration of asbestos activities and shall be available for emergencies.

d. Asbestos Abatement Workers: Asbestos abatement workers shall meet the requirements contained in 29 CFR 1926, Section .1101, 40 CFR 61, Subpart M, and other applicable federal, state and local requirements. Worker training documentation shall be provided as required on the "Certificate of Workers Acknowledgment" in this paragraph.

e. Worker Training and Certification of Worker Acknowledgment: Training documentation will be required for each employee who will perform OSHA Class I, Class II, Class III, or Class IV asbestos abatement operations. Such documentation shall be submitted on a Contractor generated form titled "Certificate of Workers Acknowledgment", to be completed for each employee in the same format and containing the same information as the example certificate at the end of this section. Training course completion certificates (initial and most recent update refresher) required by the information checked on the form shall be attached.

f. Physician: The Contractor shall provide the name, medical qualifications, address, and telephone number of the physician who will or has performed the medical examinations and evaluations of the persons who will conduct the asbestos abatement work tasks. The physician shall be currently licensed by the state where the workers will be or have been examined, have expertise in pneumoconiosis and

shall be responsible for the determination of medical surveillance protocols and for review of examination/test results performed in compliance with 29 CFR 1926, Section .1101 and paragraph MEDICAL REQUIREMENTS. The physician shall be familiar with the site's hazards and the scope of this project. The physician is not required to visit the work site.

g. First Aid and CPR Trained Persons: The names of at least 2 persons who are currently trained in first aid and CPR by the American Red Cross or other approved agency shall be designated and shall be onsite at all times during site operations. They shall be trained in universal precautions and the use of PPE as described in the Bloodborne Pathogens Standard of 29 CFR 1910, Section .1030 and shall be included in the Contractor's Bloodborne Pathogen Program. These persons may perform other duties but shall be immediately available to render first aid when needed. A copy of each designated person's current valid First Aid and CPR certificate shall be provided.

h. Independent Testing Laboratory: The Contractor shall provide the name, address and telephone number of the independent testing laboratory selected to perform the sample analyses and report the results. The testing laboratory shall be completely independent from the Contractor as recognized by federal, state or local regulations. Written verification of the following criteria, signed by the testing laboratory principal and the Contractor, shall be submitted:

(1) Phase contrast microscopy (PCM): The laboratory is fully equipped and proficient in conducting PCM of airborne samples using the methods specified by 29 CFR 1926, Section .1101, OSHA method ID-160, the most current version of NIOSH Pub No. 84-100 Method 7400; the laboratory is currently judged proficient (classified as acceptable) in counting airborne asbestos samples by PCM by successful participation in each of the last 4 rounds in the American Industrial Hygiene Association (AIHA) Proficiency Analytical Testing (PAT) Program. The selected microscopists who will analyze airborne samples by PCM shall be judged proficient in counting samples as current participating analysts in the AIHA PAT Program, and shall have successfully completed the Asbestos Sampling and Analysis course (NIOSH 582 or equivalent) .

(2) Polarized light microscopy (PLM): If bulk analysis is required, provide evidence that the laboratory is fully equipped and proficient in conducting PLM analyses of suspect ACM bulk samples in accordance with 40 CFR 763, Subpart E, Appendix E; the laboratory is currently accredited by NIST under the NVLAP for bulk asbestos analysis and will use analysts (names shall be provided) with demonstrated proficiency to conduct PLM to include its application to the identification and quantification of asbestos content.

(3) Transmission electron microscopy (TEM): The laboratory is fully equipped and proficient in conducting TEM analysis of airborne samples using the mandatory method specified by 40 CFR 763, Subpart E, Appendix E; the laboratory is currently accredited by NIST under the NVLAP for airborne sample analysis of asbestos by TEM; the laboratory will use analysts that are currently evaluated as competent with demonstrated proficiency under the NIST NVLAP for airborne sample analysis of asbestos by TEM or proficient in conducting analysis for low asbestos concentration, enhanced analysis of floor tiles and bulk materials where multiple layers are present, using an improved EPA test method titled, "Method for the Determination of Asbestos in Bulk Building Materials".

i. Disposal Facility, Transporter: The Contractor shall provide written evidence that the landfill to be used is approved for asbestos disposal

by the USEPA, state and local regulatory agencies. Copies of signed agreements between the Contractor (including subcontractors and transporters) and the asbestos waste disposal facility to accept and dispose of all asbestos containing waste generated during the performance of this contract shall be provided. Qualifications shall be provided for each subcontractor or transporter to be used, indicating previous experience in transport and disposal of asbestos waste to include all required state and local waste hauler requirements for asbestos. The Contractor and transporters shall meet the DOT requirements of 49 CFR 171, 49 CFR 172, and 49 CFR 173 as well as registration requirements of 49 CFR 107 and other applicable state or local requirements. The disposal facility shall meet the requirements of 40 CFR 61, Sections .154 or .155, as required in 40 CFR 61, Section .150(b), and other applicable state or local requirements.

1.6 REGULATORY REQUIREMENTS

In addition to detailed requirements of this specification, work performed under this contract shall comply with EM 385-1-1, applicable federal, state, and local laws, ordinances, criteria, rules and regulations regarding handling, storing, transporting, and disposing of asbestos waste materials. This includes, but is not limited to, OSHA standards, 29 CFR 1926, especially Section .1101, 40 CFR 61, Subpart M and 40 CFR 763. Matters of interpretation of standards shall be submitted to the appropriate administrative agency for resolution before starting work. Where the requirements of this specification, applicable laws, criteria, ordinances, regulations, and referenced documents vary, the most stringent requirements shall apply.

1.7 SAFETY AND HEALTH PROGRAM AND PLANS

The Contractor shall develop and submit a written comprehensive site-specific Accident Prevention Plan at least 30 days prior to the preconstruction conference. The Accident Prevention Plan shall address requirements of EM 385-1-1, Appendix A, covering onsite work to be performed by the Contractor and subcontractors. The Accident Prevention Plan shall incorporate an Asbestos Hazard Abatement Plan, and Activity Hazard Analyses as separate appendices into one (1) site specific Accident Prevention Plan document. Any portions of the Contractor's overall Safety and Health Program that are referenced in the Accident Prevention Plan, e.g., respirator program, hazard communication program, confined space entry program, etc., shall be included as appendices to the Accident Prevention Plan. The plan shall be prepared, signed (and sealed, including certification number if required), and dated by the Contractor's Designated IH, Competent Person, and Project Supervisor.

1.7.1 Asbestos Hazard Abatement Plan Appendix

The Asbestos Hazard Abatement Plan appendix to the Accident Prevention Plan shall include, but not be limited to, the following:

a. The personal protective equipment to be used;

b. The location and description of regulated areas including clean and dirty areas, and decontamination unit (clean room, shower room, equipment room, storage areas such as load-out unit);

c. Initial exposure assessment in accordance with 29 CFR 1926, Section .1101;

d. Level of supervision;

e. Method of notification of other employers at the worksite;

f. Abatement method to include containment and control procedures;

g. Interface of trades involved in the construction;

h. Sequencing of asbestos related work;

i. Storage and disposal procedures and plan;

j. Type of wetting agent to be used;

k. Location of local exhaust equipment;

l. Air monitoring methods (personal, environmental and clearance);

m. Bulk sampling and analytical methods (if required);

n. A detailed description of the method to be employed in order to control the spread of ACM wastes and airborne fiber concentrations;

o. Fire and medical emergency response procedures;

p. The security procedures to be used for all regulated areas.

1.7.2 Activity Hazard Analyses Appendix

Activity Hazard Analyses, for each major phase of work, shall be submitted and updated during the project. The Activity Hazard Analyses format shall be in accordance with EM 385-1-1 (Figure 1-1). The analysis shall define the activities to be performed for a major phase of work, identify the sequence of work, the specific hazards anticipated, and the control measures to be implemented to eliminate or reduce each hazard to an acceptable level. Work shall not proceed on that phase until the Activity Hazard Analyses has been accepted and a preparatory meeting has been conducted by the Contractor to discuss its contents with everyone engaged in the activities, including the onsite Government representatives. The Activity Hazard Analyses shall be continuously reviewed and, when appropriate, modified to address changing site conditions or operations.

1.8 PRECONSTRUCTION CONFERENCE AND ONSITE SAFETY

The Contractor and the Contractor's Designated Competent Person, Project Supervisor, and Designated IH shall meet with the Contracting Officer prior to beginning work at a safety preconstruction conference to discuss the details of the Contractor's submitted Accident Prevention Plan to include the Asbestos Hazard Abatement Plan and Activity Hazard Analyses appendices. Deficiencies in the Accident Prevention Plan will be discussed and the Accident Prevention Plan shall be revised to correct the deficiencies and resubmitted for acceptance. Any changes required in the specification as a result of the Accident Prevention Plan shall be identified specifically in the plan to allow for free discussion and acceptance by the Contracting Officer, prior to the start of work. Onsite work shall not begin until the Accident Prevention Plan has been accepted. A copy of the written Accident Prevention Plan shall be maintained onsite. Changes and modifications to the accepted Accident Prevention Plan shall be made with the knowledge and concurrence of the Designated IH, the Project Supervisor, Designated Competent Person, and the Contracting Officer. Should any unforeseen hazard become evident during the performance of the work, the Designated IH shall bring such hazard to the attention of the Project Supervisor, Designated IH, and the Contracting Officer, both verbally and in writing, for resolution as soon as possible. In the interim, all necessary action shall be taken by the Contractor to restore and maintain safe working conditions in order to safeguard onsite personnel, visitors, the public, and the environment. Once accepted by the Contracting Officer, the Accident Prevention Plan, including the Asbestos Hazard Abatement Plan and Activity Hazard Analyses will be enforced as if an addition to the contract.

Disregarding the provisions of this contract or the accepted Accident Prevention Plan will be cause for stopping of work, at the discretion of the Contracting Officer, until the matter has been rectified.

1.9 SECURITY

Barriers to prevent entry of unauthorized personnel shall be provided for each regulated area. A log book shall be kept documenting entry into and out of the regulated area. Entry into regulated areas shall only be by personnel authorized by the Contractor and the Contracting Officer. Personnel authorized to enter regulated areas shall be trained, be medically evaluated, and wear the required personal protective equipment for the specific regulated area to be entered.

1.10 MEDICAL REQUIREMENTS

Medical requirements shall conform to 29 CFR 1926, Section .1101.

1.10.1 Medical Examinations

Before being exposed to airborne asbestos fibers, workers shall be provided with a medical examination as required by 29 CFR 1926, Section .1101 and other pertinent state or local requirements. This requirement shall have been satisfied within the last 12 months. The same medical examination shall be given on an annual basis to employees engaged in an occupation involving asbestos and within 30 calendar days before or after the termination of employment in such occupation. X-ray films of asbestos workers shall be identified to the consulting radiologist and medical record jackets shall be marked with the word "asbestos."

1.10.1.1 Information Provided to the Physician

The Contractor shall provide the following information in writing to the examining physician:

a. A copy of 29 CFR 1926, Section .1101 and Appendices D, E, G, and I;

b. A description of the affected employee's duties as they relate to the employee's exposure;

c. The employee's representative exposure level or anticipated exposure level;

d. A description of any personal protective and respiratory equipment used or to be used;

e. Information from previous medical examinations of the affected employee that is not otherwise available to the examining physician.

1.10.1.2 Written Medical Opinion

For each worker, a written medical opinion prepared and signed by a licensed physician indicating the following:

a. Summary of the results of the examination.

b. The potential for an existing physiological condition that would place the employee at an increased risk of health impairment from exposure to asbestos.

c. The ability of the individual to wear personal protective equipment, including respirators, while performing strenuous work tasks under cold and/or heat stress conditions.

d. A statement that the employee has been informed of the results of the examination, provided with a copy of the results, informed of the increased risk of lung cancer attributable to the combined effect of smoking and asbestos exposure, and informed of any medical condition that may result from asbestos exposure.

1.10.2 Medical and Exposure Records

Complete and accurate records shall be maintained of each employee's medical examinations, medical records, and exposure data, as required by 29 CFR 1910, Section .1910.20 and 29 CFR 1926, Section .1101 for a period of 50 years after termination of employment. Records of the required medical examinations and exposure data shall be made available, for inspection and copying, to the Assistant Secretary of Labor for Occupational Safety and Health (OSHA) or authorized representatives of the employee and an employee's physician upon request of the employee or former employee. A copy of the required medical certification for each employee shall be maintained on file at the worksite for review, as requested by the Contracting Officer or the representatives.

1.11 TRAINING PROGRAM

1.11.1 General Training Requirements

The Contractor shall establish a training program as specified by EPA Model Accreditation Plan (MAP), training requirements at 40 CFR 763, Subpart E, Appendix C, the State of North Carolina NCAC Title 15 (Chapter 19), OSHA requirements at 29 CFR 1926, Section .1101(k)(9), and this specification. Contractor employees shall complete the required training for the type of work they are to perform and such training shall be documented and provided to the Contracting Officer as specified in paragraph QUALIFICATIONS.

1.11.2 Project Specific Training

Prior to commencement of work, each worker shall be instructed in the following project specific training:

a. The hazards and health effects of the specific types of ACM to be abated;

b. The content and requirements of the Contractor's Accident Prevention Plan to include the Asbestos Hazard Abatement Plan and Activity Hazard Analyses and site-specific safety and health precautions;

c. Hazard Communication Program;

d. Hands-on training for each asbestos abatement technique to be employed;

e. Heat and/or cold stress monitoring specific to this project;

f. Air monitoring program and procedures;

g. Medical surveillance to include medical and exposure record-keeping procedures;

h. The association of cigarette smoke and asbestos-related disease;

i. Security procedures;

j. Specific work practice controls and engineering controls required for each Class of work in accordance with 29 CFR 1926, Section .1101.

1.12 RESPIRATORY PROTECTION PROGRAM

The Contractor shall establish in writing, and implement a respiratory protection program in accordance with 29 CFR 1926, Section .1101, 29 CFR 1910, Section .134, ANSI Z88.2, CGA G-7, CGA G-7.1 and DETAIL SHEET 12. The Contractor shall establish minimum respiratory protection requirements based on measured or anticipated levels of airborne asbestos fiber concentrations encountered during the performance of the asbestos abatement work. The Contractor's respiratory protection program shall include, but not be limited to, the following elements:

a. The company policy, used for the assignment of individual responsibility, accountability, and implementation of the respiratory protection program.

b. The standard operating procedures covering the selection and use of respirators. Respiratory selection shall be determined by the hazard to which the worker is exposed.

c. Medical evaluation of each user to verify that the worker may be assigned to an activity where respiratory protection is required.

d. Training in the proper use and limitations of respirators.

e. Respirator fit-testing, i.e., quantitative, qualitative and individual functional fit checks.

f. Regular cleaning and disinfection of respirators.

g. Routine inspection of respirators during cleaning and after each use when designated for emergency use.

h. Storage of respirators in convenient, clean, and sanitary locations.

i. Surveillance of regulated area conditions and degree of employee exposure (e.g., through air monitoring).

j. Regular evaluation of the continued effectiveness of the respiratory protection program.

k. Recognition and procedures for the resolution of special problems as they affect respirator use (e.g., no facial hair that comes between the respirator face piece and face or interferes with valve function; prescription eye wear usage; contact lenses usage; etc.).

l. Proper training in putting on and removing respirators.

1.12.1 Respiratory Fit Testing

A qualitative or quantitative fit test conforming to 29 CFR 1926, Section 1101, Appendix C shall be conducted for each Contractor worker required to wear a respirator, and for the Contracting Officer and authorized visitors who enter a regulated area where respirators are required to be worn. A respirator fit test shall be performed for each worker wearing a negative-pressure respirator prior to initially wearing a respirator on this project and every 6 months thereafter. The qualitative fit tests may be used only for testing the fit of half-mask respirators where they are permitted to be worn, or of full-facepiece air purifying respirators where they are worn at levels at which half-facepiece air purifying respirators are permitted. If physical changes develop that will affect the fit, a new fit test for the worker shall be performed. Functional fit checks shall be performed by employees each time a respirator is put on and in accordance with the manufacturer's recommendation.

1.12.2 Respirator Selection and Use Requirements

The Contractor shall provide respirators, and ensure that they are used as required by 29 CFR 1926, Section .1101 and in accordance with the manufacturer's recommendations. Respirators shall be jointly approved by the Mine Safety and Health Administration and the National Institute for Occupational Safety and Health (MSHA/NIOSH), or by NIOSH, under the provisions of 42 CFR 84, for use in environments containing airborne asbestos fibers. Personnel who handle ACM, enter regulated areas that require the wearing of a respirator, or who are otherwise carrying out abatement activities that require the wearing of a respirator, shall be provided with approved respirators that are fully protective of the worker at the measured or anticipated airborne asbestos concentration level to be encountered. For air-purifying respirators, the particulate filter portion of the cartridges or canister approved for use in airborne asbestos environments shall be high-efficiency particulate air (HEPA).

The initial respirator selection and the decisions regarding the upgrading or downgrading of respirator type shall be made by the Contractor's Designated IH based on the measured or anticipated airborne asbestos fiber concentrations to be encountered. Recommendations made by the Contractor to downgrade respirator type shall be submitted in writing to the Contracting Officer. The Contractor's Designated Competent Person shall have the authority to take immediate action to upgrade or downgrade respiratory type when there is an immediate danger to the health and safety of the wearer. Respirators shall be used in the following circumstances:

a. During all Class I asbestos jobs.

b. During all Class II work where the ACM is not removed in a substantially intact state.

c. During all Class II and III work which is not performed using wet methods. Respirators need not be worn during removal of ACM from sloped roofs when a negative exposure assessment has been made and ACM is removed in an intact state.

d. During all Class II and III asbestos jobs where the Contractor does not produce a negative exposure assessment.

e. During all Class III jobs where TSI or surfacing ACM is being disturbed.

f. During all Class IV work performed within regulated areas where employees performing other work are required to wear respirators.

g. During all work where employees are exposed above the PEL-TWA or PEL-Excursion Limit.

h. In emergencies

1.12.3 Class I Work

The Contractor shall provide: (1) a tight-fitting, powered air purifying respirator equipped with high efficiency filters, or (2) a full-facepiece supplied air respirator operated in the pressure demand mode, equipped with HEPA egress cartridges, or (3) an auxiliary positive pressure self-contained breathing apparatus, for all employees within the regulated area where Class I work is being performed; provided that a negative exposure assessment has not been produced, and that the exposure level will not exceed 1 f/cc as an 8-hour time weighted average. A full-facepiece supplied air respirator, operated in the pressure demand mode, equipped with an auxiliary positive pressure self-contained breathing apparatus shall be provided under such conditions, if the exposure assessment indicates exposure levels above 1 f/cc as an 8-hour time weighted average.

1.12.4 Class II and III Work

The Contractor shall provide an air purifying respirator, other than a disposable respirator, equipped with high-efficiency filters whenever the employee performs Class II and III asbestos jobs where the Contractor does not produce a negative exposure assessment ; and Class III jobs where TSI or surfacing ACM is being disturbed.

1.12.5 Sanitation

Employees who wear respirators shall be permitted to leave work areas to wash their faces and respirator facepieces whenever necessary to prevent skin irritation associated with respirator use.

1.13 HAZARD COMMUNICATION PROGRAM

A hazard communication program shall be established and implemented in accordance with 29 CFR 1926, Section .59. Material safety data sheets (MSDSs) shall be provided for all hazardous materials brought onto the worksite. One copy shall be provided to the Contracting Officer and 1 copy shall be included in the Contractor's Hazard Communication Program.

1.14 LICENSES, PERMITS AND NOTIFICATIONS

1.14.1 General Legal Requirements

Necessary licenses, permits and notifications shall be obtained in conjunction with the project's asbestos abatement, transportation and disposal actions and timely notification furnished of such actions as required by federal, state, regional, and local authorities. The Contractor shall notify the Regional Office of the USEPA, state's environmental protection agency responsible for asbestos air emissions, any local air pollution control district/agency, state OSHA program, and the Contracting Officer in writing, at least 10 days prior to the commencement of work, in accordance with 40 CFR 61, Subpart M, and state and local requirements to include the mandatory "Notification of Demolition and Renovation Record" form and other required notification documents. Notification shall be by Certified Mail, Return Receipt Requested. The Contractor shall furnish copies of the receipts to the Contracting Officer, in writing, prior to the commencement of work. A copy of the rental company's written acknowledgment and agreement shall be provided as required by paragraph RENTAL EQUIPMENT. For licenses, permits, and notifications that the Contractor is responsible for obtaining, the Contractor shall pay any associated fees or other costs incurred.

1.14.2 Litigation and Notification

The Contractor shall notify the Contracting Officer if any of the following occur:

a. The Contractor or any of the subcontractors are served with notice of violation of any law, regulation, permit or license which relates to this contract;

b. Proceedings are commenced which could lead to revocation of related permits or licenses; permits, licenses or other Government authorizations relating to this contract are revoked;

c. Litigation is commenced which would affect this contract;

d. The Contractor or any of the subcontractors become aware that their equipment or facilities are not in compliance or may fail to comply in the future with applicable laws or regulations.

1.15 PERSONAL PROTECTIVE EQUIPMENT

Three complete sets of personal protective equipment shall be made available to the Contracting Officer and authorized visitors for entry to the regulated area. Contracting Officer and authorized visitors shall be provided with training equivalent to that provided to Contractor employees in the selection, fitting, and use of the required personal protective equipment and the site safety and health requirements. Contractor workers shall be provided with personal protective clothing and equipment and the Contractor shall ensure that it is worn properly. The Contractor's Designated IH and Designated Competent Person shall select and approve all the required personal protective clothing and equipment to be used.

1.15.1 Respirators

Respirators shall be in accordance with paragraph RESPIRATORY PROTECTION PROGRAM.

1.15.2 Whole Body Protection

Personnel exposed to airborne concentrations of asbestos that exceed the PELs, or for all OSHA Classes of work for which a required negative exposure assessment is not produced, shall be provided with whole body protection and such protection shall be worn properly. The Contractor's Designated IH and Competent Person shall select and approve the whole body protection to be used. The Competent Person shall examine work suits worn by employees at least once per work shift for rips or tears that may occur during performance of work. When rips or tears are detected while an employee is working, rips and tears shall be immediately mended, or the work suit shall be immediately replaced. Disposable whole body protection shall be disposed of as asbestos contaminated waste upon exiting from the regulated area. Reusable whole body protection worn shall be either disposed of as asbestos contaminated waste upon exiting from the regulated area or be properly laundered in accordance with 29 CFR 1926, Section .1101. Whole body protection used for asbestos abatement shall not be removed from the worksite by a worker to be cleaned. Recommendations made by the Contractor's Designated IH to downgrade whole body protection shall be submitted in writing to the Contracting Officer. The Contractor's Designated Competent Person, in consultation with the Designated IH, has the authority to take immediate action to upgrade or downgrade whole body protection when there is an immediate danger to the health and safety of the wearer.

1.15.2.1 Coveralls

Disposable-impermeable coveralls with a zipper front shall be provided. Sleeves shall be secured at the wrists, and foot coverings secured at the ankles. See DETAIL SHEET 13.

1.15.2.2 NOT USED

1.15.2.3 Work Clothing

An additional coverall shall be provided when the abatement and control method employed does not provide for the exit from the regulated area directly into an attached decontamination unit. Cloth work clothes for wear under the protective coverall, and foot coverings, shall be provided when work is being conducted in low temperature conditions. Cloth work clothes shall be either disposed of as asbestos contaminated waste or properly laundered in accordance with 29 CFR 1926, Section .1101.

1.15.2.4 Gloves

Gloves shall be provided to protect the hands. Where there is the potential for

hand injuries (i.e., scrapes, punctures, cuts, etc.) a suitable glove shall be provided and used.

1.15.2.5 Foot Coverings

Cloth socks shall be provided and worn next to the skin. Footwear, as required by OSHA and EM 385-1-1, that is appropriate for safety and health hazards in the area shall be worn. Rubber boots shall be used in moist or wet areas. Reusable footwear removed from the regulated area shall be thoroughly decontaminated or disposed of as ACM waste. Disposable protective foot covering shall be disposed of as ACM waste. If rubber boots are not used, disposable foot covering shall be provided.

1.15.2.6 Head Covering

Hood type disposable head covering shall be provided. In addition, protective head gear (hard hats) shall be provided as required. Hard hats shall only be removed from the regulated area after being thoroughly decontaminated.

1.15.2.7 Protective Eye Wear

Eye protection provided shall be in accordance with ANSI Z87.1.

1.16 HYGIENE FACILITIES AND PRACTICES

The Contractor shall establish a decontamination area for the decontamination of employees, material and equipment. The Contractor shall ensure that employees enter and exit the regulated area through the decontamination area. The decontamination facility used shall comply with Federal and state regulations and these specifications.

1.16.1 Shower Facilities

Shower facilities, when provided, shall comply with 29 CFR 1910, Section .141(d)(3).

1.16.2 3-Stage Decontamination Area

A temporary negative pressure decontamination unit that is adjacent and attached in a leak-tight manner to the regulated area shall be provided where appropriate for the work performed and as described in SET-UP DETAIL SHEET Numbers 22 and 23. Utilization of prefabricated units shall have prior approval of the Contracting Officer. The decontamination unit shall have an equipment room and a clean room separated by a shower that complies with 29 CFR 1910, Section .141 (unless the Contractor can demonstrate that such facilities are not feasible). Equipment and surfaces of containers filled with ACM shall be cleaned prior to removing them from the equipment room or area. Surfaces of the equipment room shall be wet wiped 2 times after each shift. Materials used for wet wiping shall be disposed of as asbestos contaminated waste. Two separate lockers shall be provided for each asbestos worker, one in the equipment room and one in the clean room. If approved by the Contracting Officer, hot water service may be secured from the building hot water system provided backflow protection is installed by the Contractor at the point of connection. Should sufficient hot water be unavailable, the Contractor shall provide a minimum 40 gal. electric water heater with minimum recovery rate of 20 gal. per hour and a temperature controller for each showerhead. The Contractor shall provide a minimum of 2 showers. Instantaneous type in-line water heater may be incorporated at each shower head in lieu of hot water heater, upon approval by the Contracting Officer. Flow and temperature controls shall be located within the shower and shall be adjustable by the user. The wastewater pump shall be sized for 1.25 times the showerhead flow-rate at a pressure head sufficient to satisfy the filter head loss and discharge line losses. The pump shall supply a minimum 25 gpm flow with 35 ft. of pressure head. Used shower water shall be

collected and filtered to remove asbestos contamination. Filters and residue shall be disposed of as asbestos contaminated material, per DETAIL SHEETS 9 and 14. Filtered water shall be discharged to the sanitary system. Wastewater filters shall be installed in series with the first stage pore size of 20 microns and the second stage pore size of 5 microns. The floor of the decontamination unit's clean room shall be kept dry and clean at all times. Water from the shower shall not be allowed to wet the floor in the clean room. Surfaces of the clean room and shower shall be wet-wiped 2 times after each shift change with a disinfectant solution. Proper housekeeping and hygiene requirements shall be maintained. Soap and towels shall be provided for showering, washing and drying. Any cloth towels provided shall be disposed of as ACM waste or shall be laundered in accordance with 29 CFR 1926, Section .1101.

1.16.3 Load-Out Unit

A temporary load-out unit that is adjacent and connected to the regulated area shall be provided. Utilization of prefabricated units shall have prior approval of the Contracting Officer. The load-out unit shall be attached in a leak-tight manner to each regulated area. Surfaces of the load-out unit and access tunnel shall be adequately wet-wiped 2 times after each shift change. Materials used for wet wiping shall be disposed of as asbestos contaminated waste.

1.16.4 Single Stage Decontamination Area

A decontamination area (equipment room/area) may be provided for Class I work involving less than 25 feet or 10 square feet of TSI or surfacing ACM, and for Class II and Class III asbestos work operations where exposures exceed the PELs or where there is no negative exposure assessment produced before the operation. The equipment room or area shall be adjacent to the regulated area for the decontamination of employees, material, and their equipment which is contaminated with asbestos. The equipment room or area shall consist of an area covered by an impermeable drop cloth on the floor or horizontal working surface. The area must be of sufficient size to accommodate cleaning of equipment and removing personal protective equipment without spreading contamination beyond the area. Surfaces of the equipment room shall be wet wiped 2 times after each shift. Materials used for wet wiping shall be disposed of as asbestos contaminated waste.

1.16.5 NOT USED

1.16.6 Decontamination Area Entry Procedures

The Contractor shall ensure that employees entering the decontamination area through the clean room or clean area:

a. Remove street clothing in the clean room or clean area and deposit it in lockers.

b. Put on protective clothing and respiratory protection before leaving the clean room or clean area.

c. Pass through the equipment room to enter the regulated area.

1.16.7 Decontamination Area Exit Procedures

The Contractor shall ensure that the following procedures are followed:

a. Before leaving the regulated area, respirators shall be worn while employees remove all gross contamination and debris from their work clothing using a HEPA vacuum.

b. Employees shall remove their protective clothing in the equipment room

and deposit the clothing in labeled impermeable bags or containers (see Detail Sheets 9 and 14) for disposal and/or laundering.

c. Employees shall not remove their respirators in the equipment room.

d. Employees shall shower prior to entering the clean room. If a shower has not been located between the equipment room and the clean room or the work is performed outdoors, the Contractor shall ensure that employees engaged in Class I asbestos jobs: a) Remove asbestos contamination from their work suits in the equipment room or decontamination area using a HEPA vacuum before proceeding to a shower that is not adjacent to the work area; or b) Remove their contaminated work suits in the equipment room, without cleaning worksuits, and proceed to a shower that is not adjacent to the work area.

e. After showering, employees shall enter the clean room before changing into street clothes.

1.16.8 Lunch Areas

The Contractor shall provide lunch areas in which the airborne concentrations of asbestos are below 0.01 f/cc.

1.16.9 Smoking

Smoking, if allowed by the Contractor, shall only be permitted in designated areas approved by the Contracting Officer.

1.17 REGULATED AREAS

All Class I and II asbestos work shall be conducted within regulated areas. The regulated area shall be demarcated to minimize the number of persons within the area and to protect persons outside the area from exposure to airborne asbestos. Where critical barriers or negative pressure enclosures are used, they shall demarcate the regulated area. Access to regulated areas shall be limited to authorized persons. The Contractor shall control access to regulated areas, ensure that only authorized personnel enter, and verify that Contractor required medical surveillance, training and respiratory protection program requirements are met prior to allowing entrance.

1.18 WARNING SIGNS AND TAPE

Warning signs and tape printed in language(s) understood by all who access the area shall be provided at the regulated boundaries and entrances to regulated areas. The Contractor shall ensure that all personnel working in areas contiguous to regulated areas comprehend the warning signs. Signs shall be located to allow personnel to read the signs and take the necessary protective steps required before entering the area. Warning signs, as shown and described in DETAIL SHEET 11, shall be in vertical format conforming to 29 CFR 1910 and 29 CFR 1926, Section .1101, a minimum of 20 by 14 inches, and displaying the following legend in the lower panel:

DANGER
ASBESTOS
CANCER AND LUNG DISEASE HAZARD
AUTHORIZED PERSONNEL ONLY
RESPIRATORS AND PROTECTIVE CLOTHING ARE REQUIRED IN THIS AREA

Spacing between lines shall be at least equal to the height of the upper of any two lines. Warning tape shall be provided as shown and described on DETAIL SHEET 11. Decontamination unit signage shall be as shown and described on DETAIL SHEET 15.

1.19 WARNING LABELS

Warning labels shall be affixed to all asbestos disposal containers used to contain asbestos materials, scrap, waste debris, and other products contaminated with asbestos. Containers with preprinted warning labels conforming to requirements are acceptable. Warning labels shall be as described in DETAIL SHEET 14, shall conform to 29 CFR 1926, Section .1101 and shall be of sufficient size to be clearly legible displaying the following legend:

DANGER
CONTAINS ASBESTOS FIBERS
AVOID CREATING DUST
CANCER AND LUNG DISEASE HAZARD

1.20 LOCAL EXHAUST VENTILATION

Local exhaust ventilation units shall conform to ANSI Z9.2 and 29 CFR 1926, Section .1101. Filters on local exhaust system equipment shall conform to ANSI Z9.2 and UL 586. Filter shall be UL labeled.

1.21 TOOLS

Vacuums shall be leak proof to the filter, equipped with HEPA filters, of sufficient capacity and necessary capture velocity at the nozzle or nozzle attachment to efficiently collect, transport and retain the ACM waste material. Power tools shall not be used to remove ACM unless the tool is equipped with effective, integral HEPA filtered exhaust ventilation capture and collection system, or has otherwise been approved for use by the Contracting Officer. Residual asbestos shall be removed from reusable tools prior to storage and reuse. Reusable tools shall be thoroughly decontaminated prior to being removed from regulated areas.

1.22 RENTAL EQUIPMENT

If rental equipment is to be used, written notification shall be provided to the rental agency, concerning the intended use of the equipment, the possibility of asbestos contamination of the equipment and the steps that will be taken to decontaminate such equipment. A written acceptance of the terms of the Contractor's notification shall be obtained from the rental agency.

1.23 AIR MONITORING EQUIPMENT

The Contractor's Designated IH shall approve air monitoring equipment to be used to collect samples. The equipment shall include, but shall not be limited to:

a. High-volume sampling pumps that can be calibrated and operated at a constant airflow up to 16 liters per minute when equipped with a sampling train of tubing and filter cassette.

b. Low-volume, battery powered, body-attachable, portable personal pumps that can be calibrated to a constant airflow up to approximately 3.5 liters per minute when equipped with a sampling train of tubing and filter cassette, and a self-contained rechargeable power pack capable of sustaining the calibrated flow rate for a minimum of 10 hours. The pumps shall also be equipped with an automatic flow control unit which shall maintain a constant flow, even as filter resistance increases due to accumulation of fiber and debris on the filter surface.

c. Single use standard 25 mm diameter cassette, open face, 0.8 micron pore size, mixed cellulose ester membrane filters and cassettes with 50 mm electrically conductive extension cowl, and shrink bands, to be used

with low flow pumps in accordance with 29 CFR 1926, Section .1101 for personal air sampling.

d. Appropriate plastic tubing to connect the air sampling pump to the selected filter cassette.

e. A flow calibrator capable of calibration to within plus or minus 2 percent of reading over a temperature range of minus 4 to plus 140 degrees F and traceable to a NIST primary standard.

1.24 EXPENDABLE SUPPLIES

1.24.1 Glovebag

Glovebags shall be provided as described in 29 CFR 1926, Section .1101 and SET-UP DETAIL SHEET 10. The glovebag assembly shall be 6 mil thick plastic, prefabricated and seamless at the bottom with preprinted OSHA warning label.

1.24.2 Duct Tape

Industrial grade duct tape of appropriate widths suitable for bonding sheet plastic and disposal container shall be provided.

1.24.3 Disposal Containers

Leak-tight (defined as solids, liquids, or dust that cannot escape or spill out) disposal containers shall be provided for ACM wastes as required by 29 CFR 1926 Section .1101 and DETAIL SHEETS 9A, 9B, 9C and 14.

1.24.4 Disposal Bags

Leak-tight bags, 6 mil thick, shall be provided for placement of asbestos generated waste as described in DETAIL SHEET 9A.

1.24.5 NOT USED

1.24.6 Cardboard Boxes

Heavy-duty corrugated cardboard boxes, coated with plastic or wax to retard deterioration from moisture, shall be provided as described in DETAIL SHEET 9C, if required by state and local requirements. Boxes shall fit into selected ACM disposal bags. Filled boxes shall be sealed leak-tight with duct tape.

1.24.7 Sheet Plastic

Sheet plastic shall be polyethylene of 6 mil minimum thickness and shall be provided in the largest sheet size necessary to minimize seams. Film shall conform to ASTM D 4397.

1.24.8 Amended Water

Amended water shall meet the requirements of ASTM D 1331.

1.24.9 Mastic Removing Solvent

Mastic removing solvent shall be nonflammable and shall not contain methylene chloride, glycol ether, or halogenated hydrocarbons. Solvents used onsite shall have a flash point greater than 140 degrees F.

1.24.10 Leak-tight Wrapping

Two layers of 6 mil minimum thick polyethylene sheet stock shall be used for the containment of removed asbestos-containing components or materials too

large to be placed in disposal bags as described in DETAIL SHEET 9B. Upon placement of the ACM component or material, each layer shall be individually leak-tight sealed with duct tape.

1.25 MISCELLANEOUS ITEMS

A sufficient quantity of other items, such as, but not limited to: scrapers, brushes, brooms, staple guns, tarpaulins, shovels, rubber squeegees, dust pans, other tools, scaffolding, staging, enclosed chutes, wooden ladders, lumber necessary for the construction of containments, UL approved temporary electrical equipment, material and cords, ground fault circuit interrupters, water hoses of sufficient length, fire extinguishers, first aid kits, portable toilets, logbooks, log forms, markers with indelible ink, spray paint in bright color to mark areas, project boundary fencing, etc., shall be provided.

PART 2 PRODUCTS

2.1 NOT USED

2.2 NOT USED

2.3 RECYCLABLE MATERIALS

The Contractor shall comply with EPA requirements in accordance with Section 01670 RECYCLED / RECOVERED MATERIALS.

PART 3 EXECUTION

3.1 GENERAL REQUIREMENTS

Asbestos abatement work tasks shall be performed as summarized in paragraph DESCRIPTION OF WORK and the Contractor's Accident Prevention Plan, Asbestos Hazard Abatement Plan, and the Activity Hazard Analyses. The Contractor shall use the engineering controls and work practices required in 29 CFR 1926, Section .1101(g) in all operations regardless of the levels of exposure. Personnel shall wear and utilize protective clothing and equipment as specified. The Contractor shall not permit eating, smoking, drinking, chewing or applying cosmetics in the regulated area. All hot work (burning, cutting, welding, etc.) shall be conducted under controlled conditions in conformance with 29 CFR 1926, Section .352, Fire Prevention. Personnel of other trades, not engaged in asbestos abatement activities, shall not be exposed at any time to airborne concentrations of asbestos unless all the administrative and personal protective provisions of the Contractor's Accident Prevention Plan are complied with. Power to the regulated area shall be locked-out and tagged in accordance with 29 CFR 1910, and temporary electrical service with ground fault circuit interrupters shall be provided as needed. Temporary electrical service shall be disconnected when necessary for wet removal. The Contractor shall stop abatement work in the regulated area immediately when the airborne total fiber concentration: (1) equals or exceeds 0.01 f/cc, or the pre-abatement concentration, whichever is greater, outside the regulated area; or (2) equals or exceeds 1.0 f/cc inside the regulated area. The Contractor shall correct the condition to the satisfaction of the Contracting Officer, including visual inspection and air sampling. Work shall resume only upon notification by the Contracting Officer. Corrective actions shall be documented.

3.2 PROTECTION OF ADJACENT WORK OR AREAS TO REMAIN

Asbestos abatement shall be performed without damage to or contamination of adjacent work or area. Where such work or area is damaged or contaminated, as verified by the Contracting Officer using visual inspection or sample analysis, it shall be restored to its original condition or decontaminated by the Contractor at no expense to the Government, as deemed appropriate by the Contracting Officer. This includes inadvertent spill of dirt, dust or debris in

which it is reasonable to conclude that asbestos may exist. When these spills occur, work shall stop in all effected areas immediately and the spill shall be cleaned. When satisfactory visual inspection and air sampling analysis results are obtained and have been evaluated by the Contractor's Designated IH and the Contracting Officer, work shall proceed.

3.3 OBJECTS

3.3.1 Removal of Mobile Objects

Mobile objects, furniture, and equipment will be removed from the area of work by the Government before asbestos abatement work begins.

3.3.2 NOT USED

3.4 BUILDING VENTILATION SYSTEM AND CRITICAL BARRIERS

Building ventilating systems supplying air into or returning air out of a regulated area shall be isolated by airtight seals to prevent the spread of contamination throughout the system. Air-tight critical barriers shall be installed on building ventilating openings located inside the regulated area that supply or return air from the building ventilation system or serve to exhaust air from the building. The critical barriers shall consist of 2 layers of polyethylene. Edges to wall, ceiling and floor surfaces shall be sealed with industrial grade duct tape. Critical barriers shall be installed as shown on drawings and appended SET-UP DETAIL SHEETS.

3.5 PRECLEANING

Surfaces shall be cleaned by HEPA vacuum prior to establishment of containment.

3.6 METHODS OF COMPLIANCE

3.6.1 Mandated Practices

The Contractor shall employ proper handling procedures in accordance with 29 CFR 1926 and 40 CFR 61, Subpart M, and the specified requirements. The specific abatement techniques and items identified shall be detailed in the Contractor's Asbestos Hazard Abatement Plan including, but not limited to, details of construction materials, equipment, and handling procedures. The Contractor shall use the following engineering controls and work practices in all operations, regardless of the levels of exposure:

a. Vacuum cleaners equipped with HEPA filters to collect debris and dust containing ACM.

b. Wet methods or wetting agents to control employee exposures during asbestos handling, removal, cutting, and cleanup; except where it can be demonstrated that the use of wet methods is unfeasible due to, for example, the creation of electrical hazards, equipment malfunction, and in roofing.

c. Prompt clean-up and disposalin leak-tight containers of wastes and debris contaminated with asbestos.

d. Inspection and repair of polyethylene in work and high traffic areas.

e. Cleaning of equipment and surfaces of containers filled with ACM prior to removing them from the equipment room or area.

3.6.2 Control Methods

The Contractor shall use the following control methods to comply with the PELs:

a. Local exhaust ventilation equipped with HEPA filter dust collection systems;

b. Enclosure or isolation of processes producing asbestos dust;

c. Ventilation of the regulated area to move contaminated air away from the breathing zone of employees and toward a filtration or collection device equipped with a HEPA filter;

d. Use of other work practices and engineering controls;

e. Where the feasible engineering and work practice controls described above are not sufficient to reduce employee exposure to or below the PELs, the Contractor shall use them to reduce employee exposure to the lowest levels attainable by these controls and shall supplement them by the use of respiratory protection that complies with paragraph, RESPIRATORY PROTECTION PROGRAM.

3.6.3 Unacceptable Practices

The following work practices and engineering controls shall not be used for work related to asbestos or for work which disturbs ACM, regardless of measured levels of asbestos exposure or the results of initial exposure assessments:

a. High-speed abrasive disc saws that are not equipped with point of cut ventilator or enclosures with HEPA filtered exhaust air.

b. Compressed air used to remove asbestos, or materials containing asbestos, unless the compressed air is used in conjunction with an enclosed ventilation system designed to capture the dust cloud created by the compressed air.

c. Dry sweeping, shoveling, or other dry clean-up of dust and debris containing ACM.

d. Employee rotation as a means of reducing employee exposure to asbestos.

3.6.4 Class I Work Procedures

In addition to requirements of paragraphs Mandated Practices and Control Methods, the following engineering controls and work practices shall be used:

a. A Competent Person shall supervise the installation and operation of the control system.

b. For jobs involving the removal of more than 25 feet or 10 square feet of TSI or surfacing material, the Contractor shall place critical barriers over all openings to the regulated area.

c. HVAC systems shall be isolated in the regulated area by sealing with a double layer of plastic or air-tight rigid covers.

d. Impermeable dropcloths (6 mil or greater thickness) shall be placed on surfaces beneath all removal activity.

e. Objects within the regulated area shall be handled as specified in paragraph OBJECTS.

f. Where a negative exposure assessment has not been provided or where exposure monitoring shows the PEL was exceeded, the regulated area shall be ventilated to move contaminated air away from the employee's breathing zone toward a HEPA unit or collection device.

3.6.5 Specific Control Methods for Class I Work

In addition to requirements of paragraph Class I Work Procedures, Class I asbestos work shall be performed using one or more of the control methods identified in the subparagraphs below. The Contractor shall propose the most suitable and cost efficient method for each regulated area in the Asbestos Hazard Abatement Plan. (See SECTION 01400)

3.6.5.1 NOT USED

3.6.5.2 Glovebag Systems

Glovebag systems shall be as shown in SETUP DETAIL SHEET 10. The glovebag system shall be used to remove ACM from straight runs of piping and elbows and other connections. Glovebags shall be used without modification and shall be smoke-tested for leaks and any leaks sealed prior to use. Glovebags shall be installed to completely cover the circumference of pipe or other structures where the work is to be done. Glovebags shall be used only once and shall not be moved. Glovebags shall not be used on surfaces that have temperatures exceeding 150 degrees F. Prior to disposal, glovebags shall be collapsed by removing air within them using a HEPA vacuum. Before beginning the operation, loose and friable material adjacent to the glovebag operation shall be wrapped and sealed in 2 layers of plastic or otherwise rendered intact. At least 2 persons shall perform Class I glovebag removal. Asbestos regulated work areas shall be established as specified and shown on detailed drawings and plans for glovebag abatement. Designated boundary limits for the asbestos work shall be established with rope or other continuous barriers and all other requirements for asbestos control areas shall be maintained, including area signage and boundary warning tape as specified in SET-UP DETAIL SHEET 11.

a. In addition to requirements for negative pressure glovebag systems above, the Contractor shall attach HEPA vacuum systems or other devices to the bag to prevent collapse during removal of ACM from straight runs of piping and elbows and other connections.

3.6.5.3 Mini-Enclosures

Single bulkhead containment or Mini-containment (small walk-in enclosure) as shown in SETUP DETAIL SHEET 7 to accommodate no more than 2 persons, may be used if the disturbance or removal can be completely contained by the enclosure with the following specifications and work practices. The mini-enclosure shall be inspected for leaks and smoke tested before each use. Air movement shall be directed away from the employee's breathing zone within the mini-enclosure.

3.6.5.4 Wrap and Cut Operation

Wrap and cut operations shall be as shown in SETUP DETAIL SHEET 9B and 10. Prior to cutting pipe, the asbestos-containing insulation shall be wrapped with polyethylene and securely sealed with duct tape to prevent asbestos becoming airborne as a result of the cutting process. The following steps shall be taken: install glovebag, strip back sections to be cut 6 inches from point of cut, and cut pipe into manageable sections.

3.6.6 NOT USED

3.6.7 NOT USED
3.6.8 NOT USED

3.6.9 NOT USED

3.6.10 Alternative Methods for Asphaltic Wrap

The Contractor shall use the following engineering controls and work practices when removingintact pipeline asphaltic wrap. Before work begins, and as needed during the job, the Designated Competent Person shall conduct an inspection and determine that the asphaltic wrap is intact and will likely remain intact. The material shall not be sanded, abraded, or ground. Manual methods which would render the material non-intact shall not be used. Removal or disturbance of pipeline asphaltic wrap shall be performed using wet methods.

3.6.11 Cleaning After Asbestos Removal

After completion of all asbestos removal work, surfaces from which ACM has been removed shall be wet wiped or sponged clean, or cleaned by some equivalent method to remove all visible residue. Run-off water shall be collected and filtered through a dual filtration system. A first filter shall be provided to remove fibers 20 micrometers and larger, and a final filter provided that removes fibers 5 micrometers and larger. After the gross amounts of asbestos have been removed from every surface, remaining visible accumulations of asbestos on floors shall be collected using plastic shovels, rubber squeegees, rubber dustpans, and HEPA vacuum cleaners as appropriate to maintain the integrity of the regulated area. When TSI and surfacing material has been removed, workmen shall use HEPA vacuum cleaners to vacuum every surface. Surfaces or locations which could harbor accumulations or residual asbestos dust shall be checked after vacuuming to verify that no asbestos-containing material remains; and shall be re-vacuumed as necessary to remove the ACM.

3.6.12 Class I Asbestos Work Response Action Detail Sheets

When the type and location of ACM is identified, the appropriate Class I Asbestos Work Response Action Detail Sheets will be attached. The following Class I ACM is assumed to be present:

a. Fireproofing or Thermal Surface Insulation: See Sheet 68

b. Pipe Insulation (Using a Glovebag): See Sheet 87

c. Pipe Insulation (Using a Mini-Containment Area): See Sheets 89 and 94
d. Duct Insulation: See Sheet 101.

e. Asbestos Flex Connector: See Sheet 104.

3.6.13 Class II Asbestos Work Response Action Detail Sheets

When the type and location of ACM is identified, the appropriate Class II Asbestos Work Response Action Detail Sheet will be attached.

a. Miscellaneous Asbestos-Containing Materials: See Sheet 45

3.7 FINAL CLEANING AND VISUAL INSPECTION

Upon completion of abatement, the regulated area shall be cleaned by collecting, packing, and storing all gross contamination; see SET-UP DETAIL SHEETS 9, 14 and 20. A final cleaning shall be performed using HEPA vacuum and wet cleaning of all exposed surfaces and objects in the regulated area.Upon completion of the cleaning, the Contractor shall conduct a visual pre-inspection of the cleaned area in preparation for a final inspection before final air clearance monitoring and recleaning, as necessary. Upon completion of the final cleaning, the Contractor and the Contracting Officer shall conduct a final visual inspection of the cleaned regulated area in accordance with ASTM E 1368 and document the results on the Final Cleaning and Visual Inspection as specified on the SET-UP DETAIL SHEET 19. If the Contracting Officer rejects the clean regulated area as not meeting final cleaning requirements, the Contractor shall reclean as necessary and have a follow-on inspection conducted with the

Contracting Officer. Recleaning and follow-up reinspection shall be at the Contractor's expense.

3.8 NOT USED

3.9 EXPOSURE ASSESSMENT AND AIR MONITORING

3.9.1 General Requirements For Exposure

Exposure assessment, air monitoring and analysis of airborne concentration of asbestos fibers shall be performed in accordance with 29 CFR 1926, Section .1101, the Contractor's air monitoring plan, and as specified. Personal exposure air monitoring (collected at the breathing zone) that is representative of the exposure of each employee who is assigned to work within a regulated area shall be performed by the Contractor. Breathing zone samples shall be taken for at least 25 percent of the workers in each shift, or a minimum of 2, whichever is greater. Air monitoring results at the 95 percent confidence level shall be calculated as shown in Table 1 at the end of this section. Environmental air monitoring shall be performed for indoor regulated areas by the Contractor. Final clearance environmental air monitoring (where required), shall be performed or overseen by the Contractor's Designated IH. Environmental and final clearance air monitoring shall be performed using NIOSH Pub No. 84-100 Method 7400 (PCM) . For environmental and final clearance, air monitoring shall be conducted at a sufficient velocity and duration to establish the limit of detection of the method used at 0.005 f/cc. Monitoring may be duplicated by the Government at the discretion of the Contracting Officer. Results of breathing zone samples shall be posted at the job site and made available to the Contracting Officer. The Contractor shall maintain a fiber concentration inside a regulated area less than or equal to 0.1 f/cc expressed as an 8 hour, time-weighted average (TWA) during asbestos abatement activities. If fiber concentration rises above 0.1 f/cc, work procedures shall be investigated with the Contracting Officer to determine the cause. At the discretion of the Contracting Officer, fiber concentration may exceed 0.1 f/cc but shall not exceed 1.0 f/cc expressed as an 8-hour TWA. The Contractor's workers shall not be exposed to an airborne fiber concentration in excess of 1.0 f/cc, as averaged over a sampling period of 30 minutes. Should either an environmental concentration of 1.0 f/cc expressed as an 8-hour TWA or a personal excursion concentration of 1.0 f/cc expressed as a 30-minute sample occur inside a regulated work area, the Contractor shall stop work immediately, notify the Contracting Officer, and implement additional engineering controls and work practice controls to reduce airborne fiber levels below prescribed limits in the work area. Work shall not restart until authorized by the Contracting Officer.

3.9.2 Initial Exposure Assessment

The Contractor shall conduct an exposure assessment immediately before or at the initiation of an asbestos abatement operation to ascertain expected exposures during that operation. The assessment shall be completed in time to comply with the requirements which are triggered by exposure data or the lack of a negative exposure assessment, and to provide information necessary to assure that all control systems planned are appropriate for that operation. The assessment shall take into consideration both the monitoring results and all observations, information or calculations which indicate employee exposure to asbestos, including any previous monitoring conducted in the workplace, or of the operations of the Contractor which indicate the levels of airborne asbestos likely to be encountered on the job. For Class I asbestos work, until the employer conducts exposure monitoring and documents that employees on that job will not be exposed in excess of PELs, or otherwise makes a negative exposure assessment, the Contractor shall presume that employees are exposed in excess of the PEL-TWA and PEL-Excursion Limit.

3.9.3 Negative Exposure Assessment

If the Contractor decides to use Negative Exposure Assessment, the following guidelines will be followed.

a. Objective Data: Objective data demonstrating that the product or material containing asbestos minerals or the activity involving such product or material cannot release airborne fibers in concentrations exceeding the PEL-TWA and PEL-Excursion Limit under those work conditions having the greatest potential for releasing asbestos.

b. Prior Asbestos Jobs: Where the Contractor has monitored prior asbestos jobs for the PEL and the PEL-Excursion Limit within 12 months of the current job, the monitoring and analysis were performed in compliance with asbestos standard in effect; the data were obtained during work operations conducted under workplace conditions closely resembling the processes, type of material, control methods, work practices, and environmental conditions used and prevailing in the Contractor's current operations; the operations were conducted by employees whose training and experience are no more extensive than that of employees performing the current job; and these data show that under the conditions prevailing and which will prevail in the current workplace, there is a high degree of certainty that the monitoring covered exposure from employee exposures will not exceed the PEL-TWA and PEL-Excursion Limit.

c. Initial Exposure Monitoring: The results of initial exposure monitoring of the current job, made from breathing zone air samples that are representative of the 8-hour PEL-TWA and 30-minute short-term exposures of each employee. The monitoring covered exposure from operations which are most likely during the performance of the entire asbestos job to result in exposures over the PELs.

3.9.4 NOT USED

3.9.5 Preabatement Environmental Air Monitoring

For indoor regulated areas, preabatement environmental air monitoring shall be established 1 day prior to the masking and sealing operations for each regulated area to determine background concentrations before abatement work begins. Preabatement air samples shall be collected using NIOSH Pub No. 84-100 Method 7400, PCM. The Contractor shall propose the number and location of samples in the Asbestos Hazard Abatement Plan.

3.9.6 Environmental Air Monitoring During Abatement

Unless or until the Contractor can provide an exposure assessment that demonstrates that the product or material containing asbestos minerals, or the abatement involving such product or material, cannot release airborne asbestos fibers in concentrations exceeding 0.01 f/cc as a TWA under those work conditions having the greatest potential for releasing asbestos, environmental air monitoring shall be conducted at locations and frequencies that will accurately characterize any evolving airborne asbestos fiber concentrations for indoor regulated areas. Environmental air monitoring may be discontinued only if all environmental air monitoring samples, including those inside the regulated area, do not exceed 0.01 f/cc as a TWA. The Contractor shall propose number and location of sampling in the Asbestos Hazard Abatement Plan. If the sampling outside regulated area shows airborne fiber levels have exceeded background or 0.01 f/cc, whichever is greater, work shall be stopped immediately, and the Contracting Officer notified. The condition causing the increase shall be corrected. Work shall not restart until authorized by the Contracting Officer.

3.9.7 Final Clearance Air Monitoring

Final clearance monitoring shall be conducted for indoor regulated areas in accordance with State regulations. Prior to conducting final clearance air monitoring, the Contractor and the Contracting Officer shall conduct a final visual inspection of the regulated area where asbestos abatement has been completed. The final visual inspection shall be as specified in SET-UP DETAIL SHEET 19. Final clearance air monitoring shall not begin until acceptance of the Contractor's final cleaning by the Contracting Officer. The Contractor's Designated IH shall conduct final clearance air monitoring using aggressive air sampling techniques as defined in EPA 560/5-85-024 or as otherwise required by federal or state requirements. The sampling and analytical method used will be NIOSH Pub No. 84-100Method 7400 (PCM) and Table 2.

3.9.7.1 Final Clearance Requirements, NIOSH PCM Method

For PCM sampling and analysis using NIOSH Pub No. 84-100 Method 7400, the fiber concentration inside the abated regulated area, for each airborne sample, shall be less than 0.01 f/cc. The abatement inside the regulated area is considered complete when every PCM final clearance sample is below the clearance limit. If any sample result is greater than 0.01 total f/cc, the asbestos fiber concentration (asbestos f/cc) may be confirmed from that same filter using NIOSH Pub No. 84-100 Method 7402 (TEM) at Contractor's expense. If any confirmation sample result is greater than 0.01 asbestos f/cc, abatement is incomplete and cleaning shall be repeated. Upon completion of any required recleaning, resampling with results to meet the above clearance criteria shall be done.

3.9.7.2 NOT USED

3.9.7.3 Air Clearance Failure

If clearance sampling results fail to meet the final clearance requirements, the Contractor shall pay all costs associated with the required recleaning, resampling, and analysis, until final clearance requirements are met.

3.9.8 Air-Monitoring Results and Documentation

Air sample fiber counting shall be completed and results provided within 24 hours (breathing zone samples), and 24 hours (environmental/clearance monitoring) after completion of a sampling period. The Contracting Officer shall be notified immediately of any airborne levels of asbestos fibers in excess of established requirements. Written sampling results shall be provided within 5 working days of the date of collection. The written results shall be signed by testing laboratory analyst, testing laboratory principal and the Contractor's Designated IH. The air sampling results shall be documented on a Contractor's daily air monitoring log. The daily air monitoring log shall contain the following information for each sample:

a. Sampling and analytical method used;

b. Date sample collected;

c. Sample number;

d. Sample type: BZ = Breathing Zone (Personal), P = Preabatement, E = Environmental, C = Abatement Clearance;

e. Location/activity/name where sample collected;

f. Sampling pump manufacturer, model and serial number, beginning flow rate, end flow rate, average flow rate (L/min);

g. Calibration date, time, method, location, name of calibrator, signature;

h. Sample period (start time, stop time, elapsed time (minutes);

i. Total air volume sampled (liters);

j. Sample results (f/cc and S/mm square) if EPA methods are required for final clearance;

k. Laboratory name, location, analytical method, analyst, confidence level. In addition, the printed name and a signature and date block for the Industrial Hygienist who conducted the sampling and for the Industrial Hygienist who reviewed the daily air monitoring log verifying the accuracy of the information.

3.10 CLEARANCE CERTIFICATION

When asbestos abatement is complete, ACM waste is removed from the regulated areas, and final clean-up is completed, the Contracting Officer will certify the areas as safe before allowing the warning signs and boundary warning tape to be removed. The Contractor and the Contracting Officer shall visually inspect all surfaces within the containment for residual material or accumulated debris. The Contractor shall reclean all areas showing dust or residual materials. The Contracting Officer will certify in writing that the area is safe before unrestricted entry is permitted. The Government will have the option to perform monitoring to certify the areas are safe before entry is permitted.

3.11 CLEANUP AND DISPOSAL

3.11.1 Title to ACM Materials

ACM material resulting from abatement work, except as specified otherwise, shall become the property of the Contractor and shall be disposed of as specified and in accordance with applicable federal, state and local regulations.

3.11.2 Collection and Disposal of Asbestos

All ACM waste, including contaminated wastewater filters, scrap, debris, bags, containers, equipment, and asbestos contaminated clothing, shall be collected and placed in leak-tight containers such as double plastic bags (see DETAIL SHEET 9A); sealed double wrapped polyethylene sheet (see DETAIL 9B); sealed fiberboard boxes (see DETAIL SHEET 9C); or other approved containers. Waste within the containers shall be wetted in case the container is breeched. Asbestos-containing waste shall be disposed of at an EPA, state and local approved asbestos landfill. For temporary storage, sealed impermeable containers shall be stored in an asbestos waste load-out unit or in a storage/transportation conveyance (i.e., dumpster, roll-off waste boxes, etc.) in a manner acceptable to and in an area assigned by the Contracting Officer. Procedure for hauling and disposal shall comply with 40 CFR 61, Subpart M, state, regional, and local standards.

3.11.3 NOT USED

3.11.4 Weigh Bill and Delivery Tickets

Copies of weigh bills and delivery tickets shall be submitted to the Contracting Officer during the progress of the work. The Contractor shall furnish the Contracting Officer scale tickets for each load of ACM weighed and certified. These tickets shall include tare weight; identification mark for each vehicle weighed; and date, time and location of loading and unloading. Tickets shall be furnished at the point and time individual trucks arrive at the worksite. A master log of all vehicle loading shall be furnished for each day of loading operations. Before the final statement is allowed, the Contractor shall file with the Contracting Officer certified weigh bills and/or certified tickets and

manifests of all ACM actually disposed by the Contractor for this contract.

3.11.5 Asbestos Waste Shipment Record

The Contractor shall complete and provide the Contracting Officer final completed copies of the Waste Shipment Record for all shipments of waste material as specified in 40 CFR 61, Subpart M and other required state waste manifest shipment records, within 3 days of delivery to the landfill. Each Waste Shipment Record shall be reviewed by 43 CES/CEVC signed and dated by the Contractor, the waste transporter and disposal facility operator.

TABLE 1

FORMULA FOR CALCULATION OF THE 95 PERCENT CONFIDENCE LEVEL
(Reference: NIOSH 7400)

Fibers/cc(01.95 percent CL) = X + [(X) * (1.645) * (CV)]

Where: X = ((E)(AC))/((V)(1000))

E = ((F/Nf) - (B/Nb))/Af

CV = The precision value; 0.45 shall be used unless the analytical laboratory provides the Contracting Officer with documentation (Round Robin Program participation and results) that the laboratory's precision is better.

AC = Effective collection area of the filter in square millimeters

V = Air volume sampled in liters

E = Fiber density on the filter in fibers per square millimeter

F/Nf = Total fiber count per graticule field

B/Nb = Mean field blank count per graticule field

Af = Graticule field area in square millimeters

TWA = C1/T1 + C2/T2 = Cn/Tn

Where: C = Concentration of contaminant

T = Time sampled.

TABLE 2

NI0SH METHOD 7400

PCM ENVIRONMENTAL AIR SAMPLING PROTOCOL (NON-PERSONAL)

Sample Location	Minimum No. of Samples	Filter Pore Size (Note 1)	Min. Vol. (Note 2) (Liters)	Sampling Rate (liters/min.)
Inside Abatement Area	0.5/140 Square Meters (Notes 3 & 4)	0.45 microns	3850	2-16
Each Room in 1 Abatement Area Less than 140 Square meters		0.45 microns	3850	2-16
Field Blank	2	0.45 microns	0	0
Laboratory Blank	1	0.45 microns	0	0

Notes:

1. Type of filter is Mixed Cellulose Ester.

2. Ensure detection limit for PCM analysis is established at 0.005 fibers/cc.

3. One sample shall be added for each additional 140 square meters. (The corresponding I-P units are 5/1500 square feet).

4. A minimum of 5 samples are to be taken per abatement area, plus 2 field blanks.

TABLE 4

EPA AHERA METHOD: TEM AIR SAMPLING PROTOCOL

Location Sampled	Minimum No. of Samples	Filter Pore Size	Min. Vol. (Liters)	Sampling Rate (liters/min.)
Inside Abatement Area	5	0.45 microns	1500	2-16
Outside Abatement Area	5	0.45 microns	1500	2-16
Field Blank	2	0.45 microns	0	0
Laboratory Blank	1	0.45 microns	0	0

Notes:

1. Type of filter is Mixed Cellulose Ester.

2. The detection limit for TEM analysis is 70 structures/square mm.

CERTIFICATE OF WORKER'S ACKNOWLEDGMENT

PROJECT NAME _____ CONTRACT NO. _____
PROJECT ADDRESS _____
CONTRACTOR FIRM NAME _____
EMPLOYEE'S NAME _____,_____,_____,
(Print) (Last) (First) (MI)

Social Security Number: _____-_____-_____,

WORKING WITH ASBESTOS CAN BE DANGEROUS. INHALING ASBESTOS FIBERS HAS BEEN LINKED WITH TYPES OF LUNG DISEASE AND CANCER. IF YOU SMOKE AND INHALE ASBESTOS FIBERS, THE CHANCE THAT YOU WILL DEVELOP LUNG CANCER IS GREATER THAN THAT OF THE NONSMOKING PUBLIC.

Your employer's contract for the above project requires that you be provided and you complete formal asbestos training specific to the type of work you will perform and project specific training; that you be supplied with proper personal protective equipment including a respirator, that you be trained in its use; and that you receive a medical examination to evaluate your physical capacity to perform your assigned work tasks, under the environmental conditions expected, while wearing the required personal protective equipment. These things are to be done at no cost to you. By signing this certification, you are acknowledging that your employer has met these obligations to you. The Contractor's Designated Industrial Hygienist will check the block(s) for the type of formal training you have completed. Review the checked blocks prior to signing this certification.

FORMAL TRAINING:
_____ a. For Competent Persons and Supervisors: I have completed EPA's Model Accreditation Program (MAP) training course, "Contractor/Supervisor", that meets this State's requirements.

b. For Workers:
_____ (1) For OSHA Class I work: I have completed EPA's MAP training course, "Worker", that meets this State's requirements.
_____ (2) For OSHA Class II work (where there will be abatement of more than one type of Class II materials, i.e., roofing, siding, floor tile, etc.): I have completed EPA's MAP training course, "Worker", that meets this State's requirements.
(3) For OSHA Class II work (there will only be abatement of one type of Class II material):
_____ (a) I have completed an 8-hour training class on the elements of 29 CFR 1926, Section .1101(k)(9)(viii), in addition to the specific work practices and engineering controls of 29 CFR 1926, Section .1101(g) and hands-on training.
_____ (b) I have completed EPA's MAP training course, "Worker", that meets this State's requirements.
_____ (4) For OSHA Class III work: I have completed at least a 16-hour course consistent with EPA requirements for training of local education agency maintenance and custodial staff at 40 CFR 763, Section .92(a)(2) and the elements of 29 CFR 1926, Section .1101(k)(9)(viii), in addition to the specific work practices and engineering controls at 29 CFR 1926, Section .1101, and hands-on training.

CERTIFICATE OF WORKER'S ACKNOWLEDGMENT

_____ (5) For OSHA Class IV work: I have completed at least a 2-hr course consistent with EPA requirements for training of local education agency maintenance and custodial staff at 40 CFR 763, (a)(1), and the elements of 29 CFR 1926, Section .1101(k)(9)(viii), in addition to the specific work practices and engineering controls at 29 CFR 1926, Section .1101(g) and hands-on training.

_____ c. Workers, Supervisors and the Designated Competent Person: I have completed annual refresher training as required by EPA's MAP that meets this State's requirements.

PROJECT SPECIFIC TRAINING:
_____ I have been provided and have completed the project specific training required by this Contract. My employer's Designated Industrial Hygienist and Designated Competent Person conducted the training.

RESPIRATORY PROTECTION:
_____ I have been trained in accordance with the criteria in the Contractor's Respiratory Protection program. I have been trained in the dangers of handling and breathing asbestos dust and in the proper work procedures and use and limitations of the respirator(s) I will wear. I have been trained in and will abide by the facial hair and contact lens use policy of my employer.

RESPIRATOR FIT-TEST TRAINING:
_____ I have been trained in the proper selection, fit, use, care, cleaning,maintenance, and storage of the respirator(s) that I will wear. I have been fit-tested in accordance with the criteria in the Contractor's Respiratory Program and have received a satisfactory fit. I have been assigned my individual respirator. I have been taught how to properly perform positive and negative pressure fit-check upon donning negative pressure respirators each time.

MEDICAL EXAMINATION:
_____ I have had a medical examination within the last twelve months which was paid for by my employer. The examination included: health history, pulmonary function tests, and may have included an evaluation of a chest x-ray. A physician made a determination regarding my physical capacity to perform work tasks on the project while wearing personal protective equipment including a respirator. I was personally provided a copy and informed of the results of that examination. My employer's Industrial Hygienist evaluated the medical certification provided by the physician and checked the appropriate blank below. The physician determined that there:

_____ were no limitations to performing the required work tasks.
_____ were identified physical limitations to performing the required work tasks.

Date of the medical examination _____

Employee Signature _____ date _____
Contractor's Industrial
Hygienist Signature _____ date _____

-- End of Section --

Part 2, Setup Details

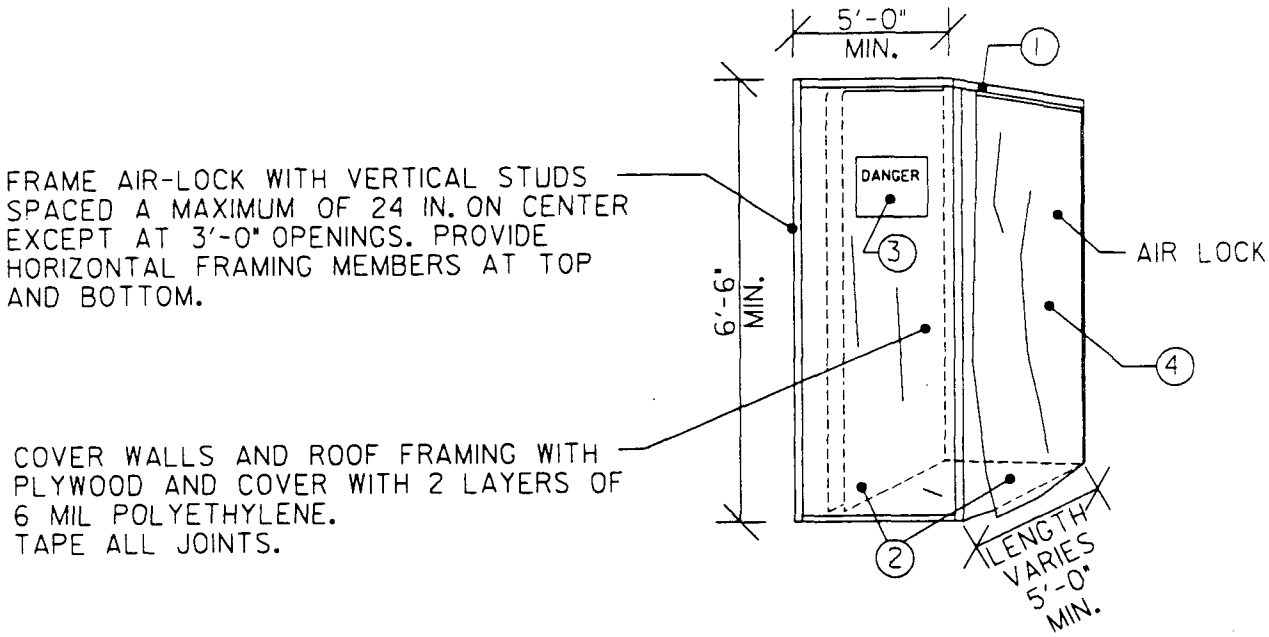

Air lock

1. Establish work area so that unauthorized entry is prevented; see sheet 11. Construct a wood frame. Install one layer of 6-mil polyethylene sheeting to structural members and two layers to the floor. Seal all edges of sheeting to wall, ceiling, and floor surfaces with duct tape.

2. Install triple flaps of 6-mil polyethylene sheeting at both doorways.

3. Install danger signs on each side of air lock area; see sheet 11.

4. Before leaving work area, remove outer suit. Place in a plastic bag; see sheet 9.

5. Enter air lock. Wet wipe respirator and wash hands with clean water from portable sprayer. Remove respirator, and place in a clean plastic bag. Proceed to shower, where inner suit may be removed.

Final clearance requirements. After abatement is completed, prepare area for final clearance. Contractor and Contracting Officer will certify visual inspection of work area on sheet 19, *Certification of Final Cleaning and Visual Inspection.* Contract designee(s) will conduct final air-clearance monitoring as required by the contract. Remove containment area upon instructions from the Contracting Officer, and treat as asbestos-contaminated material; see sheets 9 and 14.

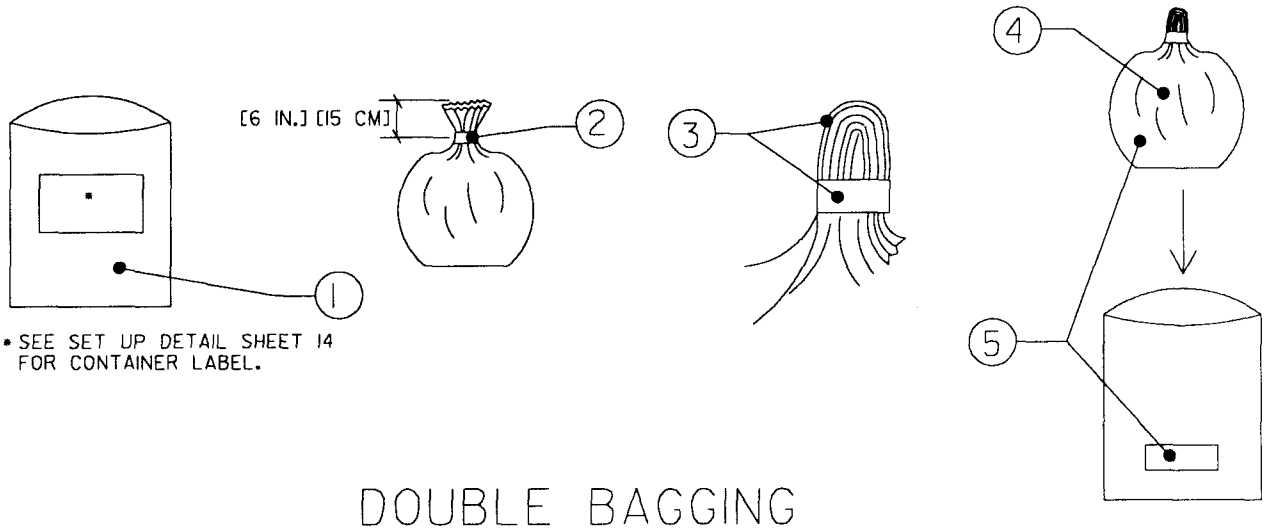

DOUBLE BAGGING

Containers—double bagging

1. Place the still-wet asbestos-containing and asbestos-contaminated material into a prelabled 6-mil polyethylene bag. Do not overfill. Do not use bag for asbestos-containing or asbestos-contaminated material that could puncture the bag. (See sheet 9C for packaging items that could puncture bags.)

2. Evacuate with HEPA vacuum, and seal collapsed bag by twisting top [6 in] [15 cm] closed and wrapping with a minimum of two layers of duct tape.

3. Twist top and fold over. Apply second wrap of duct tape.

4. Adequately wet clean outside of disposal bag by wet wiping, and take bag to the equipment and staging area.

5. Place bag inside a second prelabled 6-mil polyethylene bag.

6. Seal outer bag by repeating steps 2 and 3 above. Take bag to load-out unit; see sheet 20.

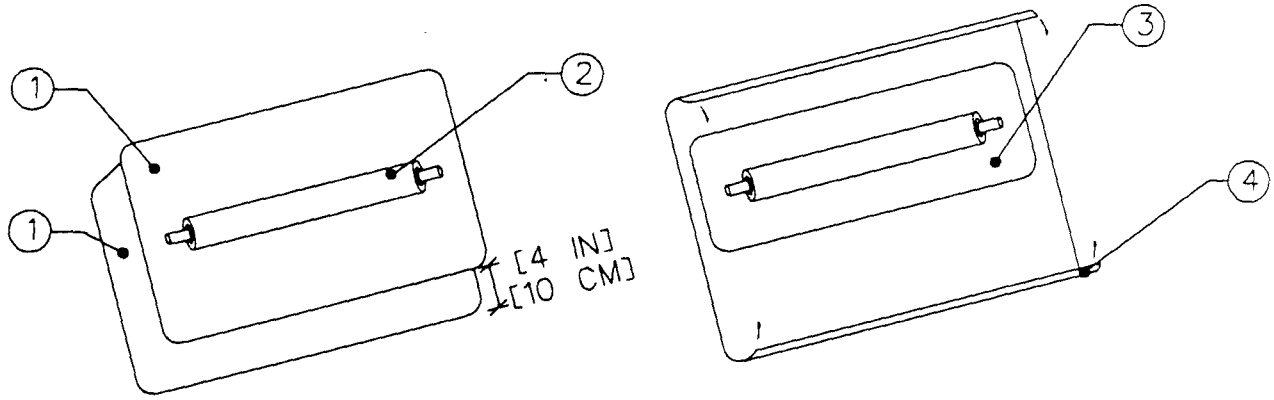

Containers—leak-tight wrapping

1. Place two layers of 6-mil polyethylene sheet on surface so that the bottom layer is offset [4 in] [10 cm] from the top layer.

2. Place the still-wet asbestos-containing or asbestos-contaminated material that is too large (boiler, vessel, pipe segment, etc.) to be placed in disposal bags on the top layer of polyethylene.

3. Wrap the top layer tightly around the contaminated material. Seal all edges of the top layer of sheeting with duct tape. Apply labels; see sheet 14.

4. Repeat procedure with bottom layer, including labeling. Take to load-out unit; see sheet 20.

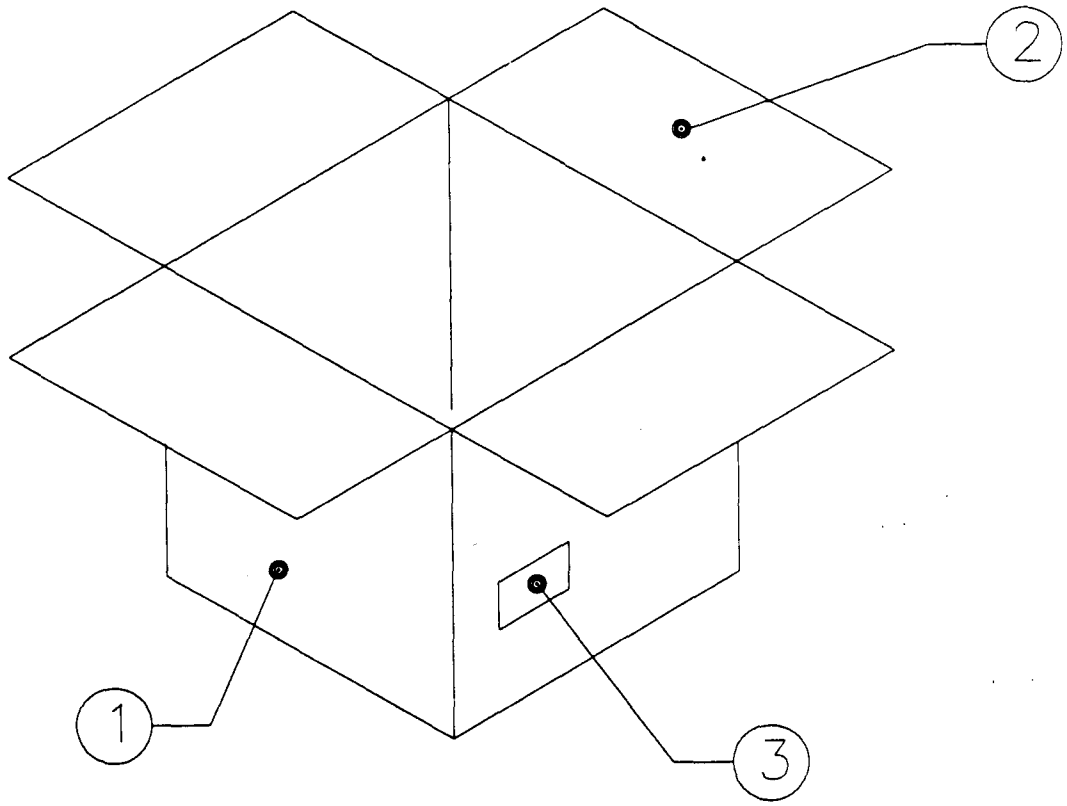

Containers—corrugated cardboard boxes

1. Place still-wet asbestos-containing or asbestos-contaminated material that could puncture disposal bags into heavy-duty corrugated cardboard boxes coated with plastic or wax that will retard deterioration from moisture.

2. Close flaps, and seal with duct tape.

3. Apply labels; see sheet 14. Place box into disposal bags; see sheet 9A. Take to load-out unit; see sheet 20.

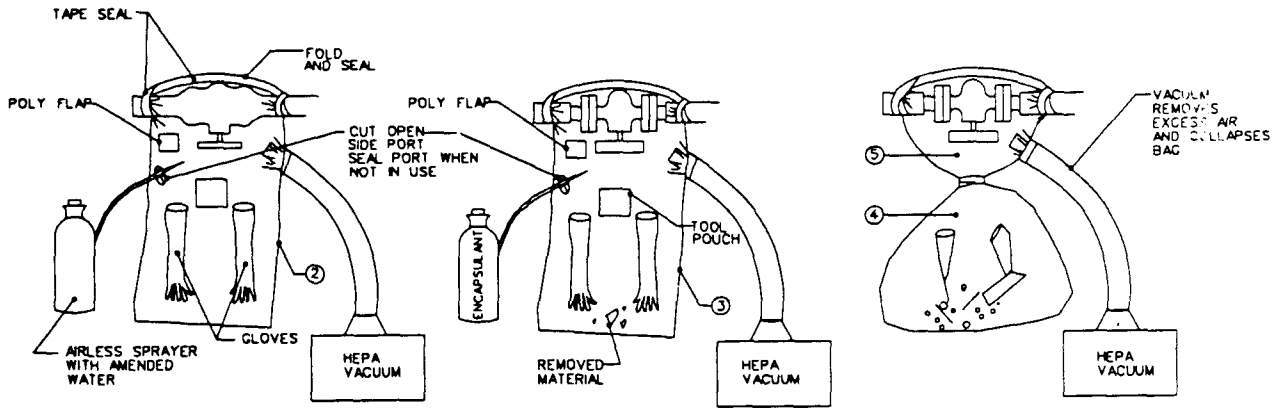

Glove bag

1. Construct modified containment area in accordance with sheet 21. NOTE: Inspect for structural integrity the insulation material adjacent to section being removed, since glove bag removal procedure is not appropriate if it will cause asbestos fiber release from adjacent asbestos-containing material.

2. Put tools and rags inside glove bag. Insulation adjacent to the asbestos-containing material being removed must be adequately wet cleaned and sprayed with an encapsulant before placing glove bag over the area to be removed. Install glove bag according to manufacturer's instructions. (NOTE: Negative-air glove bags may be used if first approved by Contracting Officer. Manufacturer procedures for negative-air glove bags will vary from procedures identified on this sheet.) Install HEPA filter vacuum cleaner with hose ducted into bag. Seal with duct tape. Smoke test for leaks. Soak insulation with amended water.

3. Remove insulation and clean exposed metal surfaces. Encapsulate exposed ends of insulation and metal surfaces. Adequately wet clean glove bag surfaces to below tool pouch.

4. Grasp tools in pouch and withdraw by pulling glove inside out. Twist glove above encased tools to create a constriction, and tape constricted area with duct tape. Cut through middle of taped area so that tools and glove bag will both remain sealed. Place encased tools into tool pouch of next glove bag or decontaminate by water immersion.

5. Evacuate glove bag, using HEPA vacuum. Twist bag to create a constriction below tool pouch. Wrap constricted area with duct tape. Cut bag [4 in] [10 cm] above constriction. Double bag cut off portion of bag; see sheet 9. Apply labels; see sheet 14. Cap and seal end of HEPA vacuum hose in order to prevent incidental fiber release.

6. Remove remaining portion of glove bag. Place in approved container; see sheet 9. Apply labels; see sheet 14. Dispose as asbestos-contaminated waste.

Final clearance requirements. For final clearance, Contractor and Contracting Officer will certify visual inspection of work area on sheet 19, *Certification of Final Cleaning and Visual Inspection*. Contract designee(s) will conduct final air-clearance monitoring as required by the contract.

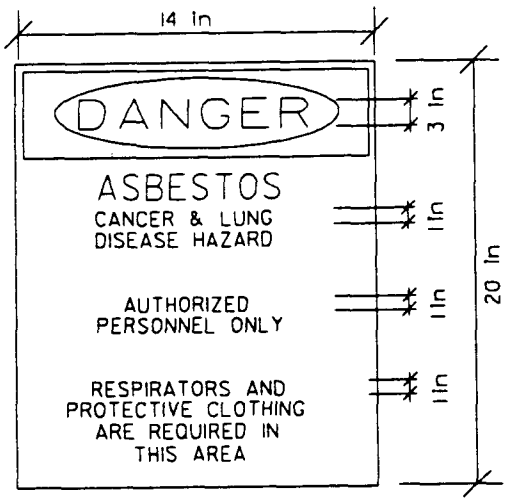

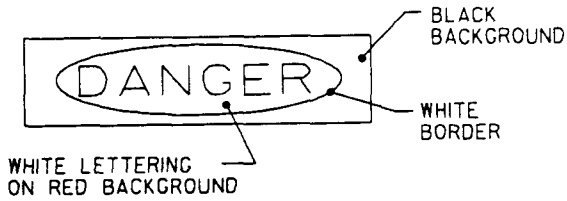

AREA WARNING SIGNS AND WARNING TAPE

DETAIL 011

Area warning signs and warning tape

1. Provide and install [4 mil] [0.10 mm] polyethylene warning tape at locations shown on the abatement area plan.

2. Warning tape is to be attached to wood or metal posts at [10 ft] [300 cm] on center. Tape must be [3 ft] [100 cm] from ground.

3. Attach both warning signs at each entrance of the work area and at [33 yd] [30 m] on center where security fencing is installed.

4. Warning signs must be in English and other languages required by the contract.

5. Install at eye level.

FIBER CONCENTRATION	MINIMUM REQUIRED RESPIRATOR	
NOT IN EXCESS OF 1 FIBER/CC	HALF-MASK AIR PURIFYING RESPIRATOR WITH HEPA FILTERS	
NOT IN EXCESS OF 5 FIBERS/CC	FULL FACEPIECE AIR-PURIFYING RESPIRATOR WITH HEPA FILTERS	
NOT IN EXCESS OF 10 FIBERS/CC	LOOSE FITTING HELMET OR HOOD, POWERED AIR-PURIFYING RESPIRATOR WITH HEPA FILTERS	
NOT IN EXCESS OF 10 FIBERS/CC	POWERED AIR-PURIFYING RESPIRATOR WITH FULL FACEPIECE AND HEPA FILTER	
NOT IN EXCESS OF 10 FIBERS/CC	LOOSE FITTING HELMET OR HOOD, SUPPLIED AIR RESPIRATOR OPERATED IN CONTINUOUS FLOW MODE WITH BACK-UP HEPA FILTER	
NOT IN EXCESS OF 10 FIBERS/CC	SUPPLIED AIR RESPIRATOR WITH FULL FACEPIECE OPERATED IN CONTINUOUS FLOW MODE WITH BACK-UP HEPA FILTER	
NOT IN EXCESS OF 100 FIBERS/CC	FULL FACEPIECE SUPPLIED AIR RESPIRATOR OPERATED IN PRESSURE-DEMAND MODE WITH BACK-UP HEPA FILTER	
GREATER THAN 100 FIBERS/CC OR UNKNOWN CONCENTRATION	FULL FACEPIECE SUPPLIED-AIR RESPIRATOR OPERATED IN PRESSURE-DEMAND MODE WITH AUXILIARY POSITIVE-PRESSURE SELF-CONTAINED BREATHING APPARATUS	

Respiratory protection table

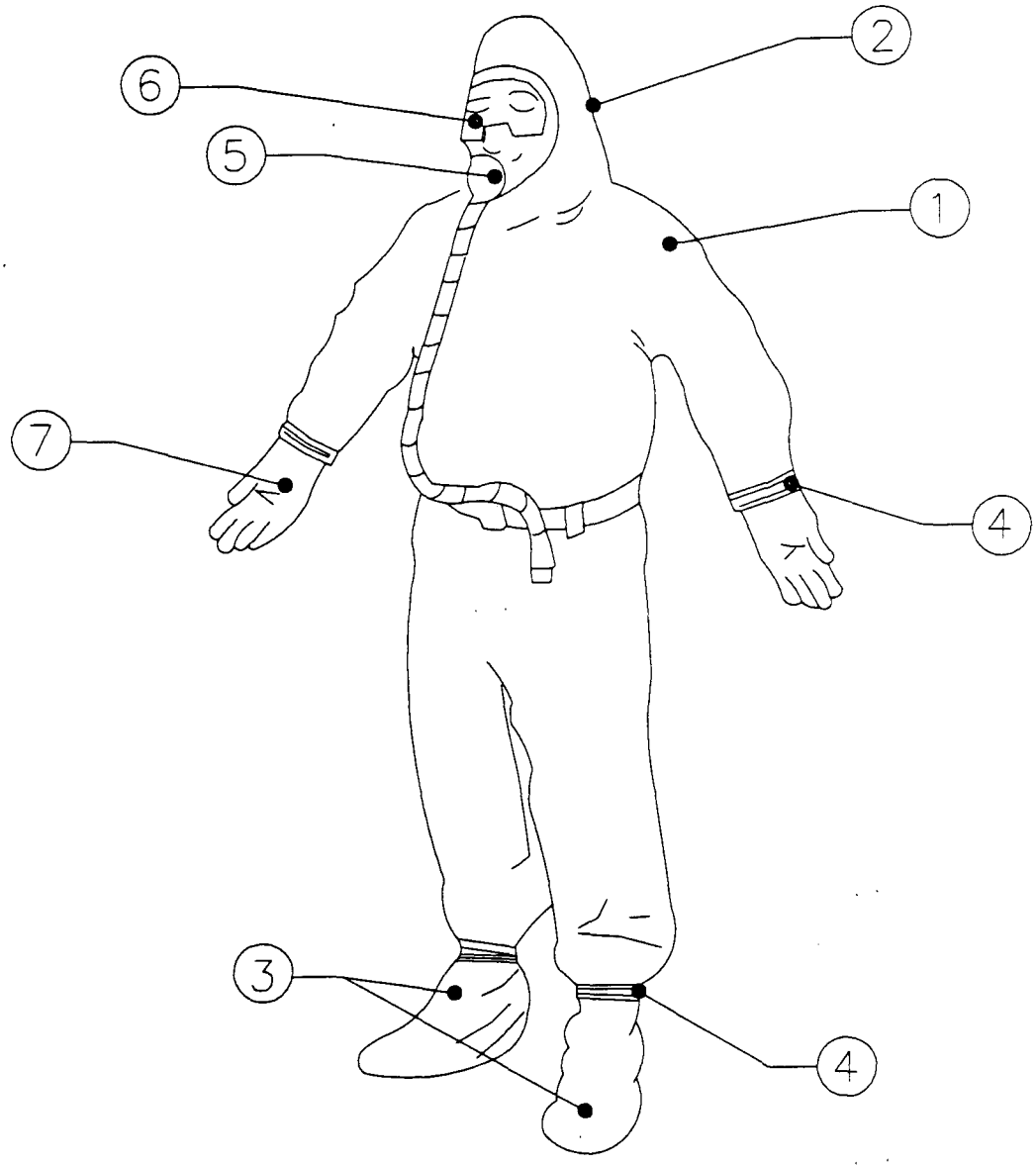

Protective clothing

1. Disposable or reusable full body suit with elastic around hood and shoe cover openings is required or as otherwise specified in the contract.

2. Hood shall be worn over respirator's head and neck straps.

3. Shoe covers shall be worn over work shoes.

4. Cuffs shall be taped with duct tape at wrists and ankles in order to prevent infiltration.

5. Cartridge-type air-purifying HEPA filter respirator is minimal requirement. Type shall be selected in accordance with sheet 12.

6. If eye protection is not integral with respirator, protection goggles are required.

7. Rubber work gloves are recommended to be worn alone or under outer work gloves provided for hand and operation safety.

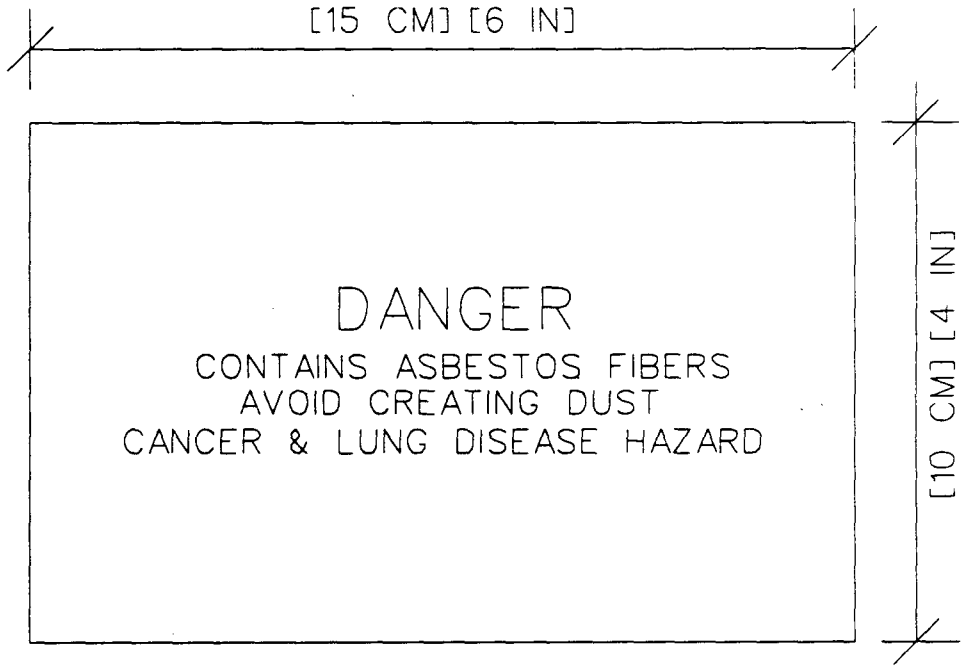

Disposal container label

Attach warning labels to each disposal container removed from abatement area.

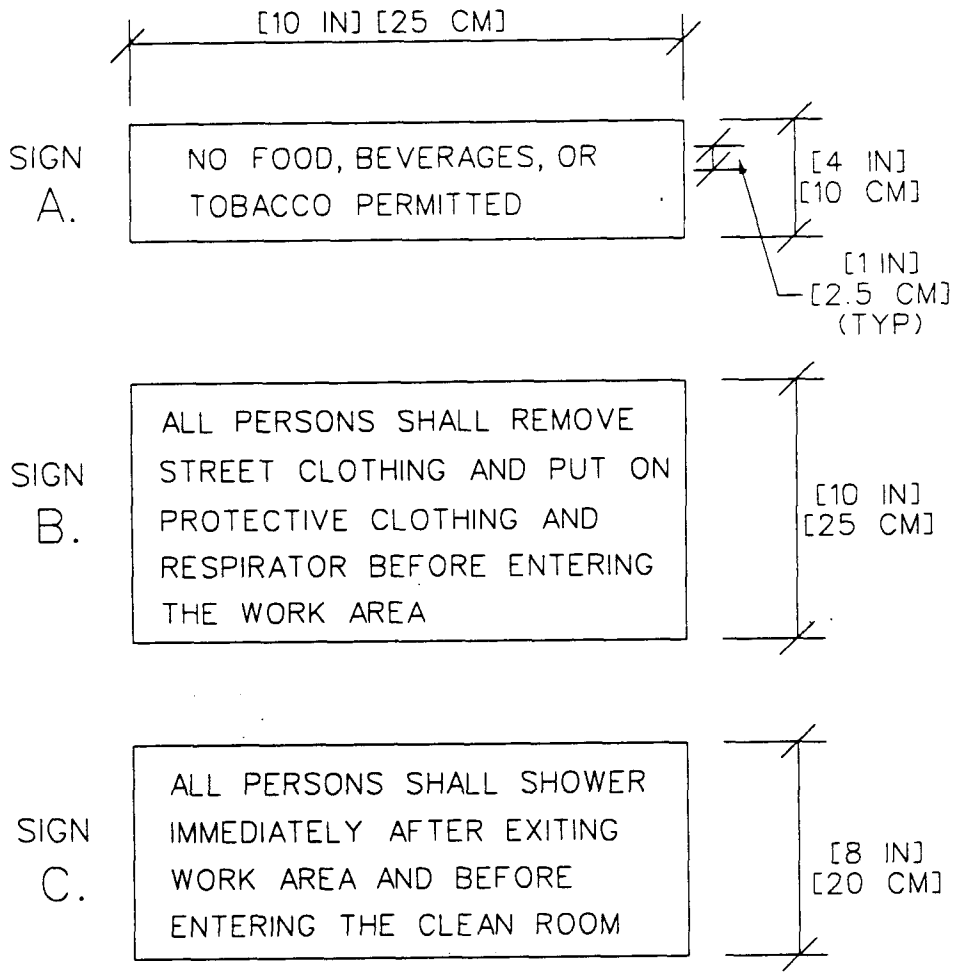

Decontamination unit signage

1. Provide signs in English and other languages required by the contract.

2. Install at eye level.

Certification of Final Cleaning And Visual Inspection

Individual abatement task as identified in paragraph, Description of Work _____

In accordance with the cleaning and decontamination procedures specified in the Contractor's asbestos hazard abatement plan and this contract, the Contractor hereby certifies that he/she has thoroughly visually inspected the decontaminated regulated work area (all surfaces, including pipes, beams, ledges, walls, ceiling, floor, decontamination unit, etc.) in accordance with ASTM E1368, *Standard Practice for Visual Inspection of Asbestos Abatement Projects*, and has found no dust, debris, or asbestos-containing material residue.

BY: (Contractor's signature) _____ Date _____

Print name and title _____

(Contractor's Onsite Supervisor signature) _____ Date _____

Print name and title _____

(Contractor's Industrial Hygienist signature) _____ Date _____

Print name and title _____

Contracting Officer Acceptance or Rejection

The Contracting Officer hereby determines that the Contractor has performed final cleaning and visual inspection of the decontaminated regulated work area (all surfaces including pipes, beams, ledges, walls, ceiling, floor, decontamination unit, etc.) and by quality assurance inspection, finds the Contractor's final cleaning to be:

☐ Acceptable

☐ Unacceptable, Contractor instructed to reclean the regulated work area.

BY: Contracting Officer's Representative

Signature _____ Date _____

Print name and title _____

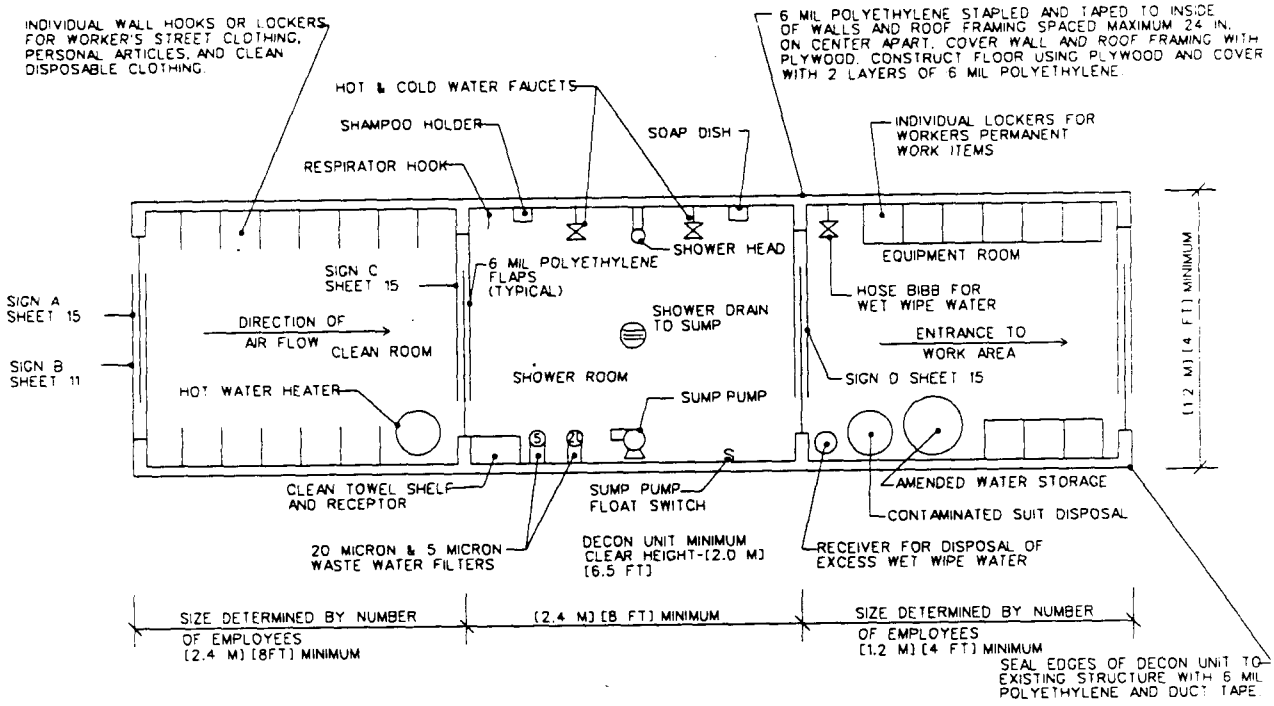

Decontamination unit floor plan

1. Establish work area so that unauthorized entry is prevented; see sheets 11 and 15. Before entering the work area, all personnel shall remove their street clothing in the clean room and put on protective clothing and respirator.

2. Whenever exiting the work area, all personnel shall:

- Vacuum clothing and shoes outside equipment room.
- Remove all clothing and equipment (except respirator) in equipment room.
- Store work shoes and equipment in locker.
- With respirator still on, shower thoroughly, including hair. Then remove respirator and finish shower.
- Proceed to clean room and put on street clothes.

3. See sheet 23 for minimum plumbing requirements, including wastewater filtration. Ensure that plumbing and specified filter size meet local requirements.

4. Twice daily, or more often if necessary, and before breaking down decontamination unit after abatement, adequately wet clean and HEPA vacuum all wall, floor, equipment, and other surfaces. Waste collected in shower room and equipment room shall be treated as asbestos-contaminated material. Place in approved container; see sheet 9. Apply labels; see sheet 14.

5. Prepare for final clearance.

Final clearance requirements. Contractor and Contracting Officer will certify visual inspection of work area on sheet 19, *Certification of Final Cleaning and Visual Inspection.* Contract designee(s) will conduct final air-clearance monitoring as required by the contract. If the unit is not a prefabricated decontamination unit, apply lockdown encapsulant before final air-clearance monitoring. After approval of final air clearance, break down and treat polyethylene as asbestos-contaminated material. Place in approved container; see sheet 9. Apply labels; see sheet 14. Dispose of as required by the contract.

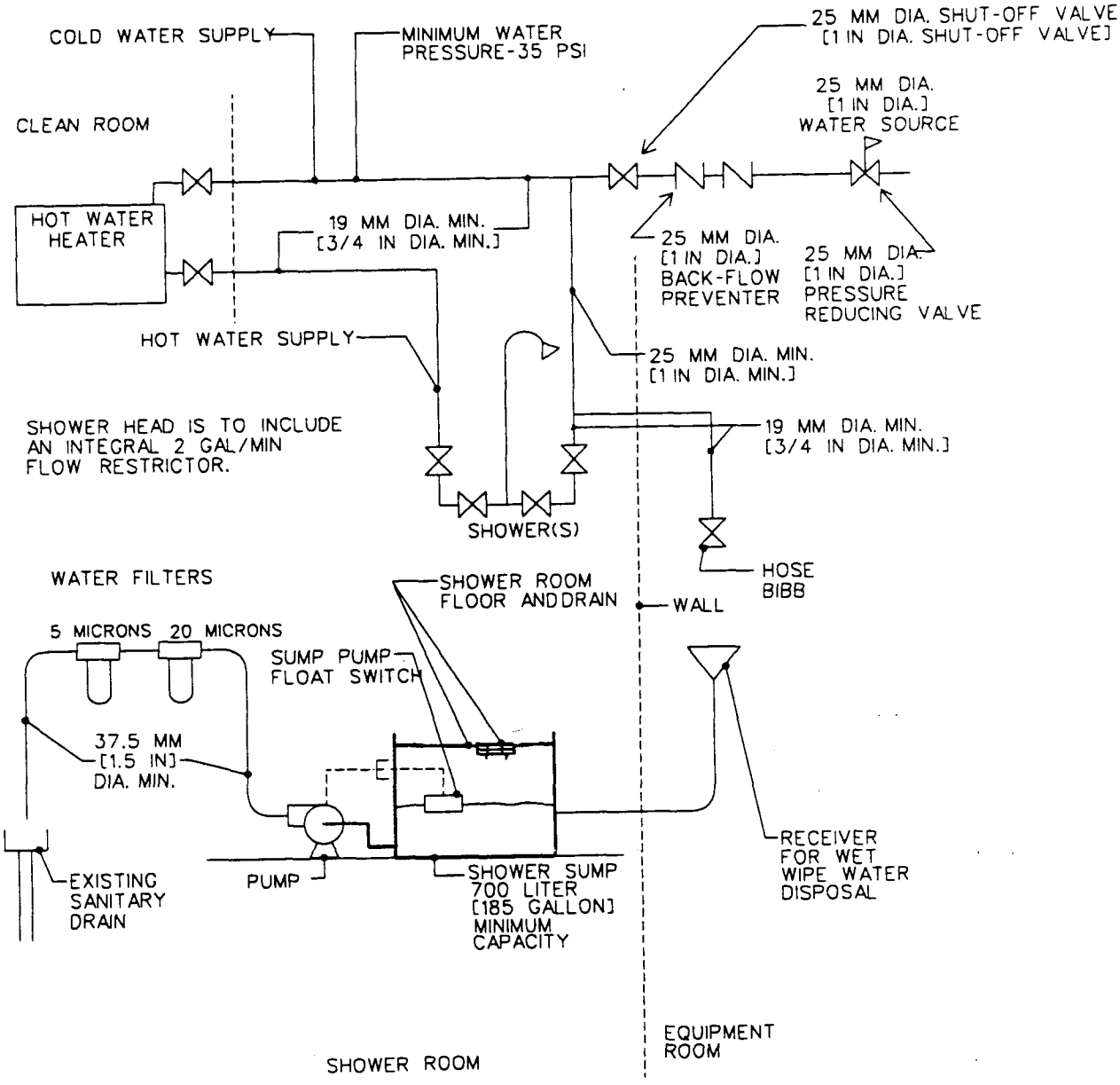

SIZE CAPACITY OF SUMP PUMP FOR TWICE THE EXPECTED WASTE WATER FLOW.

Decontamination unit piping details

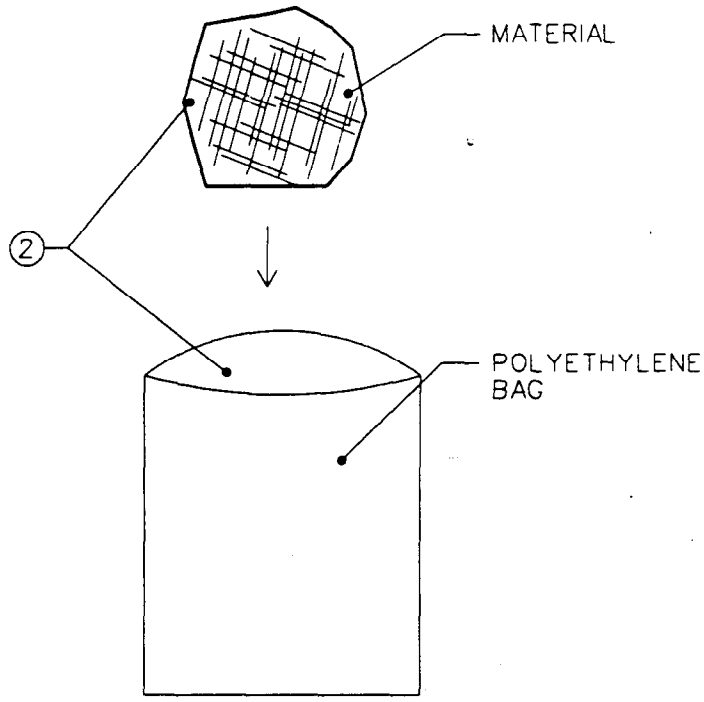

Removal of miscellaneous asbestos-containing materials

1. Establish work area so that unauthorized entry is prevented; see sheet 11. Prepare containment area as specified on sheet 21.

2. Adequately wet mist materials with amended water. Remove and place in approved container; see sheet 9. Apply labels; see sheet 14.

3. HEPA vacuum and wet wipe area in the immediate vicinity of removed materials.

4. Prepare area for final clearance.

5. Carry out final clearance requirements as specified on sheet 21.

NOTE: THIS SHEET CAN BE USED FOR PIPE FITTINGS AND FOR VERTICAL OR HORIZONTAL PIPING.

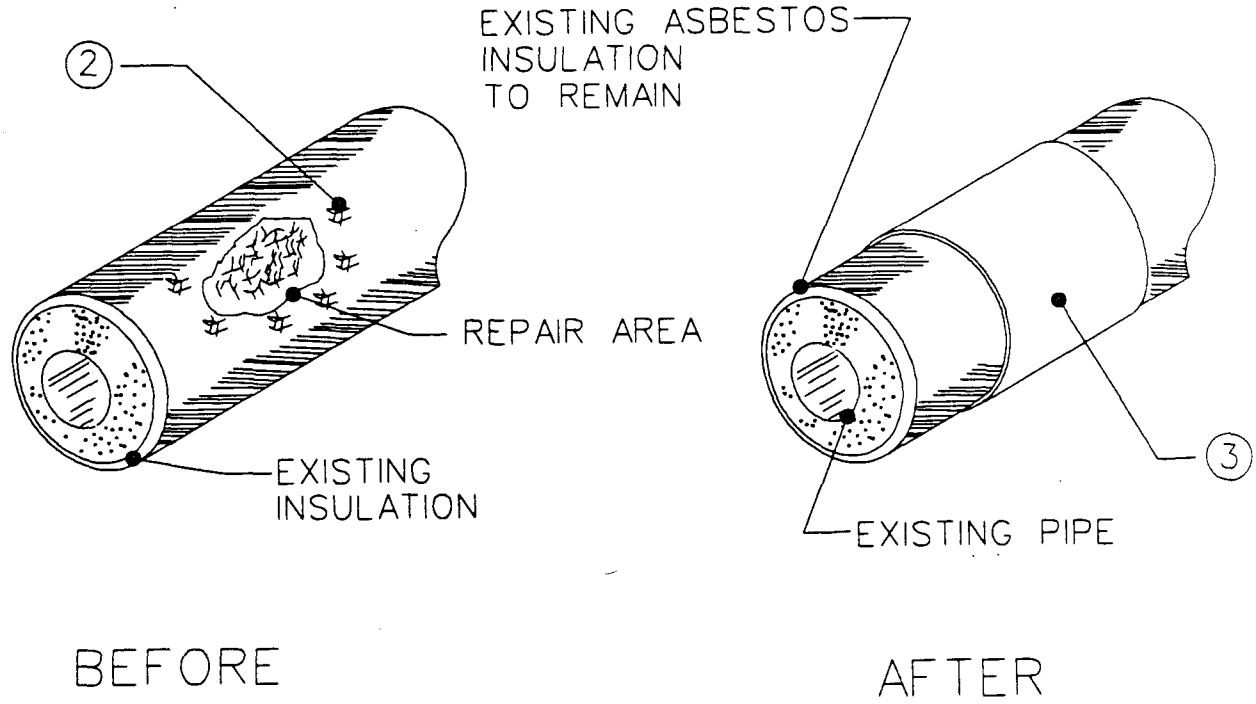

Repair of pipe and fitting insulation (using glove bag)

1. Install glove bag as specified on sheet 10. Prepare modified containment area as specified on sheet 21. Adequately wet mist insulation surface with amended water.

2. Remove any loose material in the repair area with a HEPA vacuum. Fill voids with mineral wool insulating cement.

3. Cover filled areas with a nonwoven fiberglass cloth saturated with a bridging encapsulant. Extend cloth a minimum of 6 inches beyond edge of damaged areas. Allow area to dry for 24 hours. Coat area with a second layer of tinted bridging encapsulant.

4. Inspect and reapply encapsulant as necessary.

5. Prepare area for final clearance.

6. Carry out final clearance requirements specified on sheets 10 and 21.

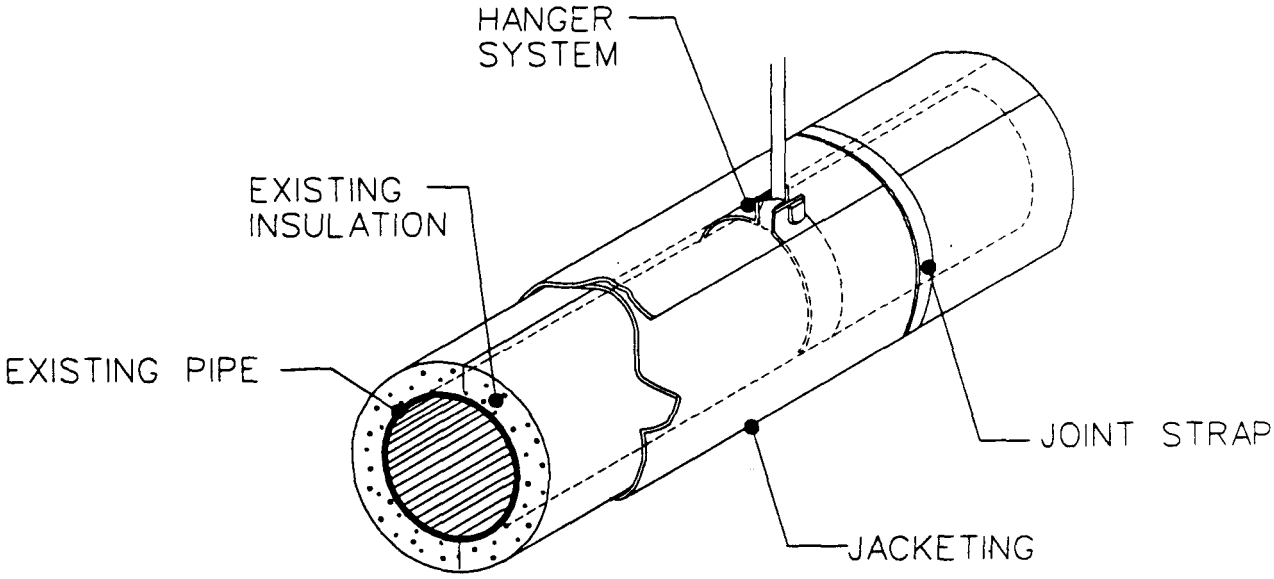

NOTE: THIS SHEET CAN BE USED FOR VERTICAL OR HORIZONTAL PIPING.

Removal of pipe insulation (using glove bag)

1. Install glove bag as specified on sheet 10. Prepare modified containment area as specified on sheet 21. Adequately wet mist insulation surface with amended water, initially and during removal.

2. Remove jacketing and asbestos pipe insulation from pipe and hanger to within 2 inches of inside edges of glove bag.

3. Clean exposed surfaces by spraying with amended water and brushing.

4. Inspect and reclean as necessary.

5. Spray a tinted penetrating encapsulant on pipe and exposed ends of insulation.

6. Inspect piping and reapply encapsulant as necessary.

7. Prepare area for final air clearance.

8. Carry out final clearance requirements specified on sheets 10 and 21.

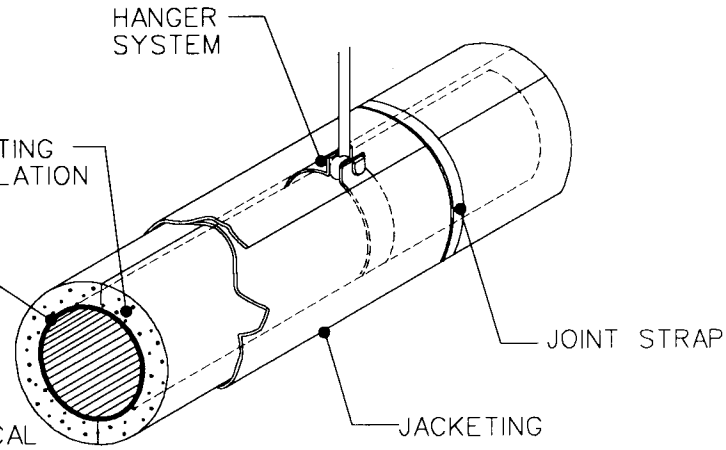

NOTE: THIS SHEET CAN BE USED FOR PIPE FITTINGS AND FOR VERTICAL OR HORIZONTAL PIPING.

Removal of horizontal pipe insulation (using containment area)

1. Prepare containment area as specified on applicable sheet 2, 3, or 4.

2. Adequately wet mist insulation surface with amended water, initially and during removal. Remove jacketing and insulation from pipe and hanger system.

3. Clean exposed surfaces by spraying with amended water and brushing.

4. Inspect and reclean as necessary.

5. Spray a tinted penetrating encapsulant on pipe and exposed ends of insulation.

6. Inspect piping and reapply encapsulant as necessary.

7. Prepare area for final air clearance.

8. Carry out final clearance requirements specified on applicable sheet 16, 17, or 18.

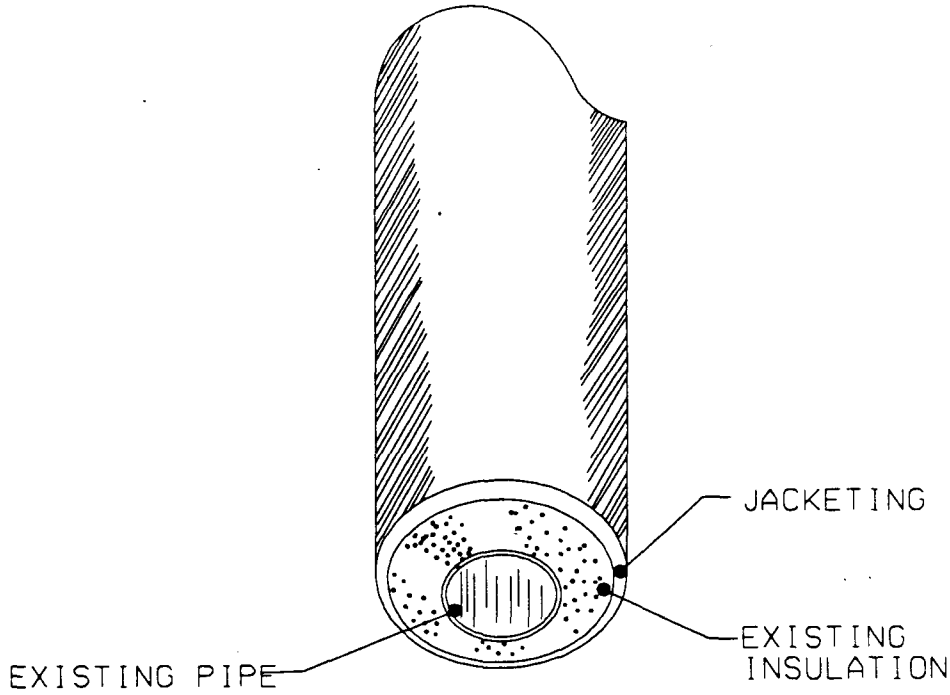

Removal of pipe insulation (using mini-containment area)

1. Prepare mini-containment area as specified on sheet 7.

2. Adequately wet mist insulation surface with amended water, initially and during removal. Remove jacketing and insulation from pipe and hanger system.

3. Clean exposed surfaces by spraying with amended water and brushing.

4. Inspect and reclean area as necessary.

5. Spray a tinted penetrating encapsulant on pipe and exposed ends of insulation. Inspect and reapply as necessary.

6. Prepare area for final clearance.

7. Carry out final clearance requirements specified on sheet 7.

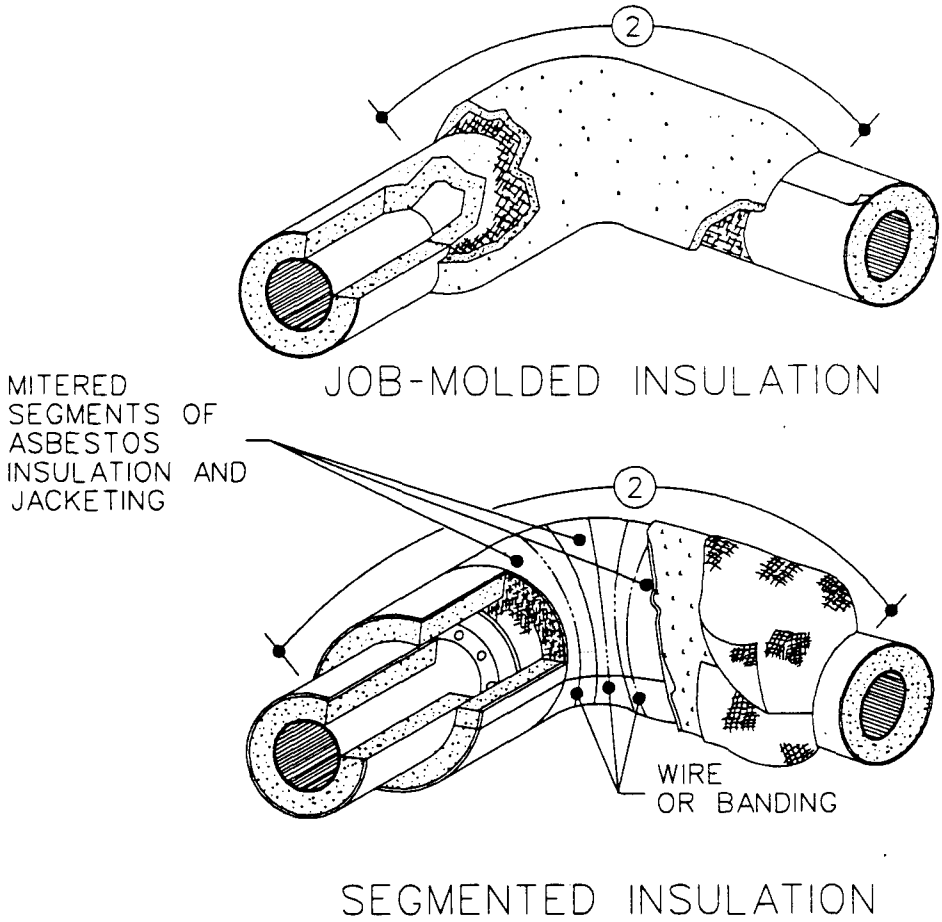

Removal of pipe-fitting insulation (using glove bag)

1. Install glove bag as specified on sheet 10. Prepare modified containment area as specified on sheet 21.

2. Adequately wet mist with amended water, initially and during removal procedure. Remove jacketing and asbestos-containing insulation from fittings and onto straight run of pipe until only asbestos-free insulation remains.

3. Clean exposed surfaces by spraying with amended water and brushing. HEPA vacuum and wet wipe all surfaces.

4. Inspect and reclean area as necessary.

5. Spray a tinted penetrating encapsulant on pipe and exposed ends of insulation.

6. Inspect and reapply penetrating encapsulant as necessary.

7. Prepare area for final air clearance.

8. Carry out final clearance requirements as specified on sheets 10 and 21.

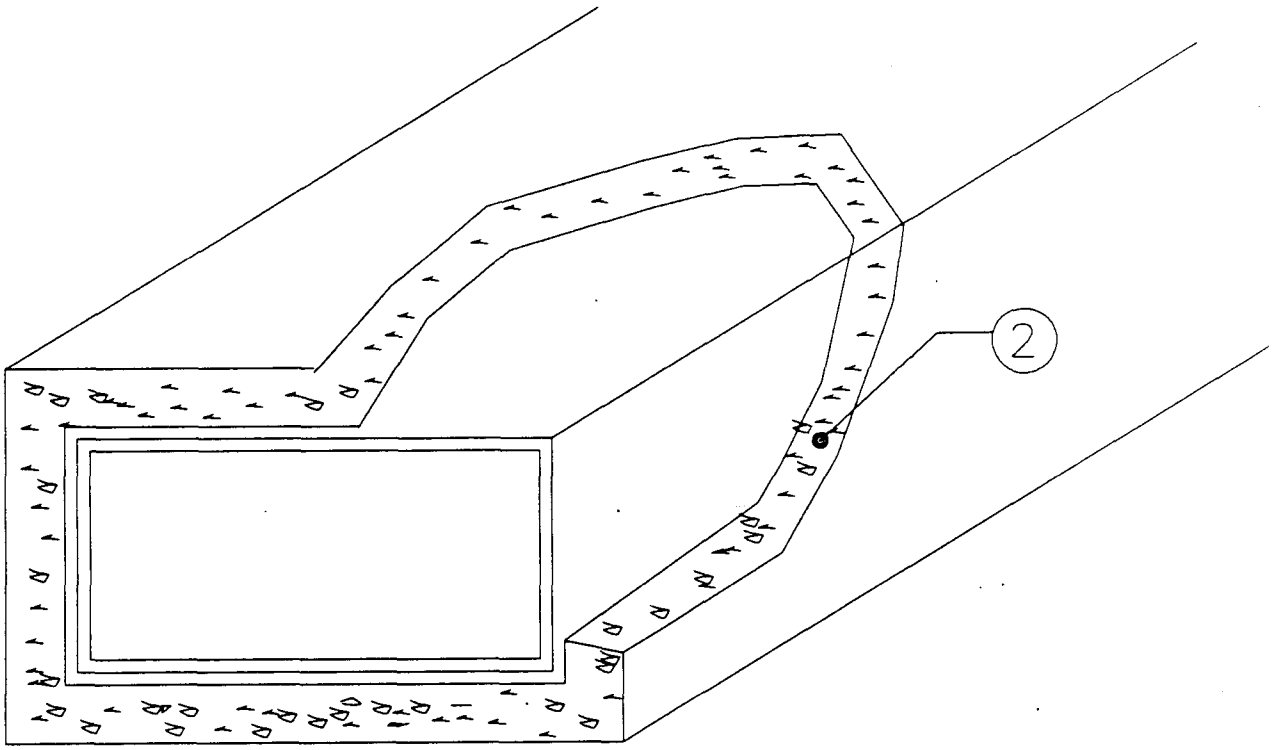

Removal of duct insulation

1. Prepare containment area as specified on applicable sheet 2, 3, or 4.

2. Adequately wet mist surface with amended water, initially and during removal procedure. Remove all asbestos insulation from duct. Place in approved container; see sheet 9. Apply labels; see sheet 14. Brush, HEPA vacuum, and wet wipe exposed duct surfaces to remove residual material.

3. Inspect and reclean area as necessary.

4. Apply tinted penetrating encapsulant. Inspect and reapply as necessary.

5. Prepare area for final air clearance.

6. Carry out final clearance requirements as specified on applicable sheet 16, 17, or 18.

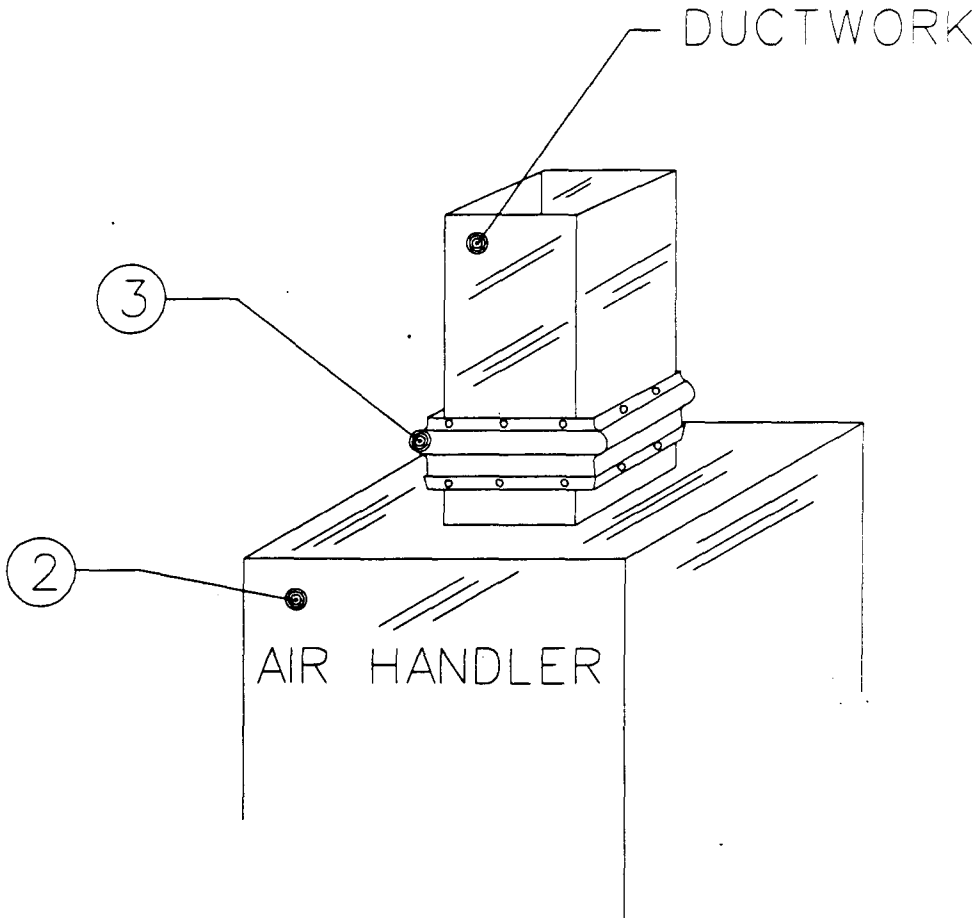

Removal of asbestos flex connector

1. Prepare modified containment area as specified on sheet 21.

2. Disconnect all electrical power to the air handler.

3. Adequately mist flex connector with removal encapsulant. Remove existing flex connector. Place in an approved container; see sheet 9. Apply labels; see sheet 14.

4. Clean, HEPA vacuum, and wet wipe area in the immediate vicinity of removed materials.

5. Inspect and reclean as necessary.

6. Prepare area for final clearance.

7. Carry out final clearance requirements as specified on sheet 21.

★ U.S. GOVERNMENT PRINTING OFFICE: 1992 329-356/70095

SECTION TABLE OF CONTENTS

DIVISION 13 - SPECIAL CONSTRUCTION

13286N

HANDLING OF LIGHTING BALLASTS AND LAMPS CONTAINING PCBs AND MERCURY

01/01

PART 1 GENERAL

1.1 REFERENCES
1.2 REQUIREMENTS
1.3 DEFINITIONS
1.3.1 Certified Industrial Hygienist (CIH)
1.3.2 Leak
1.3.3 Lamps
1.3.4 Polychlorinated Biphenyls (PCBs)
1.3.5 Spill
1.3.6 Universal Waste
1.4 QUALITY ASSURANCE
1.4.1 Regulatory Requirements
1.4.2 Training
1.4.3 Regulation Documents
1.5 SUBMITTALS
1.6 ENVIRONMENTAL REQUIREMENTS
1.7 SCHEDULING
1.8 QUALITY ASSURANCE
1.8.1 Qualifications of CIH
1.8.2 PCB and Lamp Removal Work Plan

PART 2 PRODUCTS

PART 3 EXECUTION

3.1 WORK PROCEDURE
3.1.1 Work Operations
3.2 PCB SPILL CLEANUP REQUIREMENTS
3.2.1 PCB Spills
3.2.2 PCB Spill Control Area
3.2.3 PCB Spill Cleanup
3.2.4 Records and Certification
3.3 REMOVAL
3.3.1 Ballasts
3.3.2 Lighting Lamps
3.4 STORAGE FOR DISPOSAL
3.4.1 Storage Containers for PCBs
3.4.2 Storage Containers for lamps
3.4.3 Labeling of Waste Containers
3.5 DISPOSAL
3.5.1 Identification Number
3.5.2 Transporter Certification
3.5.2.1 Certificate of Disposal and/or Recycling

-- End of Section Table of Contents --

13286N

HANDLING OF LIGHTING BALLASTS AND LAMPS CONTAINING PCBs AND MERCURY
01/01

PART 1 GENERAL

1.1 REFERENCES

The publications listed below form a part of this specification to the extent referenced. The publications are referred to within the text by the basic designation only.

U.S. NATIONAL ARCHIVES AND RECORDS ADMINISTRATION (NARA)

29 CFR 1910.1000	Air Contaminants
40 CFR 260	Hazardous Waste Management System: General
40 CFR 261	Identification and Listing of Hazardous Waste
40 CFR 262	Generators of Hazardous Waste
40 CFR 263	Transporters of Hazardous Waste
40 CFR 265	Interim Status Standards for Owners and Operators of Hazardous Waste Treatment, Storage and Disposal FacilitiesRef Title
40 CFR 268	Land Disposal Restrictions
40 CFR 270	EPA Administered Permit Programs: The Hazardous Waste Program
40 CFR 273	Standards For Universal Waste Management
40 CFR 761	Polychlorinated Biphenyls (PCBs) Manufacturing, Processing, Distribution in Commerce, and Use ProhibitionsRef Title
49 CFR 178	Shipping Container Specification

NORTH CAROLINA ADMINISTRATIVE CODE (NCAC) (COMAR)

NCAC 15A, Chapter 13A	Solid Waste Management

1.2 REQUIREMENTS

Removal and disposal of PCB containing lighting ballasts and associated mercury-containing lamps. Contractor may encounter leaking PCB ballasts.

1.3 DEFINITIONS

1.3.1 Certified Industrial Hygienist (CIH)

A industrial hygienist hired by the contractor shall be certified by the American Board of Industrial Hygiene.

1.3.2 Leak

Leak or leaking means any instance in which a PCB article, PCB container, or PCB

equipment has any PCBs on any portion of its external surface.

1.3.3 Lamps

Lamp, also referred to as "universal waste lamp", is defined as the bulb or tube portion of an electric lighting device. A lamp is specifically designed to produce radiant energy, most often in the ultraviolet, visible, and infra-red regions of the electromagnetic spectrum. Examples of common universal waste electric lamps include, but are not limited to, fluorescent, high intensity discharge, neon, mercury vapor, high pressure sodium, and metal halide lamps.

1.3.4 Polychlorinated Biphenyls (PCBs)

PCBs as used in this specification shall mean the same as PCBs, PCB containing lighting ballast, and PCB container, as defined in 40 CFR 761, Section 3, Definitions.

1.3.5 Spill

Spill means both intentional and unintentional spills, leaks, and other uncontrolled discharges when the release results in any quantity of PCBs running off or about to run off the external surface of the equipment or other PCB source, as well as the contamination resulting from those releases.

1.3.6 Universal Waste

Universal Waste means any of the following hazardous wastes that are managed under the universal waste requirements 40 CFR 273:

(1) Batteries as described in Sec. 273.2 of this chapter;
(2) Pesticides as described in Sec. 273.3 of this chapter;
(3) Thermostats as described in Sec. 273.4 of this chapter; and
(4) Lamps as described in Sec. 273.5 of this chapter.

1.4 QUALITY ASSURANCE

1.4.1 Regulatory Requirements

Perform PCB related work in accordance with 40 CFR 761 and NCAC 15A, Chapter 13A.

1.4.2 Training

Certified industrial hygienist (CIH) shall instruct and certify the training of all persons involved in the removal of PCB containing lighting ballasts and mercury-containing lamps. The instruction shall include: The dangers of PCB and mercury exposure, decontamination, safe work practices, and applicable OSHA and EPA regulations. The CIH shall review and approve the PCB and Mercury-Containing Lamp Removal Work Plans.

1.4.3 Regulation Documents

Maintain at all times one copy each at the office and one copy each in view at the job site of 29 CFR 1910.1000, 40 CFR 260, 40 CFR 261, 40 CFR 262, 40 CFR 263, 40 CFR 265, 40 CFR 268, 40 CFR 270, 40 CFR 273 and NCAC 15A, Chapter 13A and of the Contractor removal work plan and disposal plan for PCB and for associated mercury-containing lamps.

1.5 SUBMITTALS

Submit the following in accordance with Section 01330, "Submittal Procedures."

SD-07 Certificates

Qualifications of CIH; G-RE

Training Certification; G-RE

PCB and Lamp Removal Work Plan; G-RE

PCB and Lamp Disposal Plan; G-RE

SD-11 Closeout Submittals

Transporter certification of notification to EPA of their PCB waste activities and EPA ID numbers; G-RE

Certification of Decontamination

Certificate of Disposal and/or recycling; G-RE

Submit to the Government before application for payment within 30 days of the date that the disposal of the PCB and mercury-containing lamp waste identified on the manifest was completed.

DD Form 1348-1

Testing results

1.6 ENVIRONMENTAL REQUIREMENTS

Use special clothing:

a. Disposable gloves (polyethylene)

b. Eye protection

c. PPE as required by CIH

1.7 SCHEDULING

Notify the Contracting Officer 20 days prior to the start of PCB and mercury-containing lamp removal work.

1.8 QUALITY ASSURANCE

1.8.1 Qualifications of CIH

Submit the name, address, and telephone number of the Industrial Hygienist selected to perform the duties in paragraph entitled "Certified Industrial Hygienist." Submit a copy of ABIH certification to show that the Industrial Hygienist is certified, including certification number and date of certification or re certification.

1.8.2 PCB and Lamp Removal Work Plan

Submit a job-specific plan within 20 calendar days after award of contract of the work procedures to be used in the removal, packaging, and storage of PCB-containing lighting ballasts and associated mercury-containing lamps. Include in the plan: Requirements for Personal Protective Equipment (PPE), spill cleanup procedures and equipment, eating, smoking and restroom procedures. The plan shall discuss all aspects of disposal and/or recycling, including:

a. Estimated quantities of wastes to be generated, disposed of, and recycled.

b. Names and qualifications of each Contractor that will be transporting, storing, treating, and disposing of the wastes. Include the facility location. Furnish two copies of EPA and state PCB and mercury-containing lamp waste permit applications and EPA identification numbers, as required.

c. Names and qualifications (experience and training) of personnel who will be working on-site with PCB and mercury-containing lamp wastes.

d. Spill prevention, containment, and cleanup contingency measures to be implemented.

e. Work plan and schedule for PCB and mercury-containing lamp waste removal, containment, storage, transportation, disposal and or recycling. Wastes shall be cleaned up and containerize daily.

The plan shall be approved and signed by the Certified Industrial Hygienist. Obtain approval of the plan by the Contracting Officer prior to the start of PCB and/or lamp removal work.

PART 2 PRODUCTS

Not Used.

PART 3 EXECUTION

3.1 WORK PROCEDURE

Furnish labor, materials, services, and equipment necessary for the removal of PCB containing lighting ballasts, associated mercury-containing fluorescent lamps,and high intensity discharge (HID) lamps in accordance with local, state, or federal regulations. Do not expose PCBs to open flames or other high temperature sources since toxic decomposition by-products may be produced. Do not break mercury containing fluorescent lamps or high intensity discharge lamps.

3.1.1 Work Operations

Ensure that work operations or processes involving PCB or PCB-contaminated materials are conducted in accordance with 40 CFR 761, 40 CFR 262 40 CFR 263, and the applicable requirements of this section, including but not limited to:

a. Obtaining suitable PCB and mercury-containing lamp storage sites.

b. Notifying Contracting Officer prior to commencing the operation.

c. Reporting leaks and spills to the Contracting Officer.

d. Cleaning up spills.

e. Inspecting PCB and PCB-contaminated items and waste containers for leaks and forwarding copies of inspection reports to the Contracting Officer.

f. Maintaining inspection, inventory and spill records.

3.2 PCB SPILL CLEANUP REQUIREMENTS

3.2.1 PCB Spills

Immediately report to the Contracting Officer any PCB spills.

3.2.2 PCB Spill Control Area

Rope off an area around the edges of a PCB leak or spill and post a "PCB Spill Authorized Personnel Only" caution sign. Immediately transfer leaking items to a drip pan or other container.

3.2.3 PCB Spill Cleanup

40 CFR 761, subpart G. Initiate cleanup of spills as soon as possible, but no later than 24 hours of its discovery. Mop up the liquid with rags or other conventional absorbent. The spent absorbent shall be properly contained and disposed of as solid PCB waste.

3.2.4 Records and Certification

Document the cleanup with records of decontamination in accordance with 40 CFR 761, Section 125, Requirements for PCB Spill Cleanup. Provide test results of cleanup and certification of decontamination.

3.3 REMOVAL

3.3.1 Ballasts

As ballast are removed from the lighting fixture, inspect label on ballast. Ballasts without a "No PCB" label shall be assumed to contain PCBs and containerized and disposed of as required under paragraphs STORAGE FOR DISPOSAL and DISPOSAL.

3.3.2 Lighting Lamps

Remove lighting tubes/lamps from the lighting fixture and carefully place (unbroken) into appropriate containers (original transport boxes or equivalent). In the event of a lighting tube/lamp braking, sweep and place waste in double plastic taped bags and dispose of as universal waste as specified herein.

3.4 STORAGE FOR DISPOSAL

3.4.1 Storage Containers for PCBs

49 CFR 178. Store PCB in containers approved by DOT for PCB.

3.4.2 Storage Containers for lamps

Store mercury containing lamps in appropriate DOT containers. The boxes shall be stored and labeled for transport in accordance with 40 CFR 273.

3.4.3 Labeling of Waste Containers

Label with the following:

a. Date the item was placed in storage and the name of the cognizant activity/building.

b. "Caution Contains PCB," conforming to 40 CFR 761, CFR Subpart C. Affix labels to PCB waste containers.

c. Label mercury-containing lamp waste in accordance with 40 CFR 273. Affix labels to all lighting waste containers.

3.5 DISPOSAL

Dispose of off Government property in accordance with EPA, DOT, and local regulations at a permitted site.

3.5.1 Identification Number

Federal regulations 40 CFR 761, and 40 CFR 263 require that generators, transporters, commercial storers, and disposers of PCB waste posses U.S. EPA identification numbers. The contractor shall verify that the activity has a U.S. EPA generator identification number for use on the Uniform Hazardous Waste manifest. If not, the contractor shall advise the activity that it must file and obtain an I.D. number with EPA prior to commencement of removal work. For mercury containing lamp removal, Federal regulations 40 CFR 273 require that large quantity handlers of Universal waste (LQHUW) must provide notification of universal waste management to the appropriate EPA Region (or state director in authorized states), obtain an EPA identification number, and retain for three years records of off-site shipments of universal waste. The contractor shall verify that the activity has a U.S. EPA generator identification number for use on the Universal Waste manifest. If not, the contractor shall advise the activity that it must file and obtain an I.D. number with EPA prior to commencement of removal work.

3.5.2 Transporter Certification

Comply with disposal and transportation requirements outlined in 40 CFR 761 and 40 CFR 263. Before transporting the PCB waste, sign and date the manifest acknowledging acceptance of the PCB waste from the Government. Return a signed copy to the Government before leaving the job site. Ensure that the manifest accompanies the PCB waste at all times. Submit transporter certification of notification to EPA of their PCB waste activities (EPA Form 7710-53).

3.5.2.1 Certificate of Disposal and/or Recycling

40 CFR 761. Certificate for the PCBs and PCB items disposed shall include:

a. The identity of the disposal and or recycling facility, by name, address, and EPA identification number.

b. The identity of the PCB waste affected by the Certificate of Disposal including reference to the manifest number for the shipment.

c. A statement certifying the fact of disposal and or recycling of the identified PCB waste, including the date(s) of disposal, and identifying the disposal process used.

d. A certification as defined in 40 CFR 761.

-- End of Section --

SECTION TABLE OF CONTENTS

DIVISION 13 - SPECIAL CONSTRUCTION

SECTION 13851A

FIRE DETECTION AND ALARM SYSTEM, ADDRESSABLE

02/02

PART 1 GENERAL

1.1 REFERENCES
1.2 SUBMITTALS
1.3 GENERAL REQUIREMENTS
1.3.1 Standard Products
1.3.2 Nameplates
1.3.3 Keys and Locks
1.3.4 Tags
1.3.5 Verification of Dimensions
1.3.6 Compliance
1.3.7 Qualifications
1.3.7.1 Engineer and Technician
1.3.7.2 Installer
1.3.7.3 Design Services
1.4 SYSTEM DESIGN
1.4.1 Operation
1.4.2 Operational Features
1.4.3 Alarm Functions
1.4.4 Primary Power
1.4.5 Battery Backup Power
1.4.6 Interface With other Equipment
1.5 TECHNICAL DATA AND COMPUTER SOFTWARE
1.6 DELIVERY AND STORAGE

PART 2 PRODUCTS

2.1 CONTROL PANEL
2.1.1 Circuit Connections
2.1.2 System Expansion and Modification Capabilities
2.1.3 Addressable Control Module
2.1.4 Addressable Initiating Device Circuits Module
2.2 STORAGE BATTERIES
2.3 BATTERY CHARGER
2.4 ADDRESSABLE MANUAL FIRE ALARM STATIONS
2.5 FIRE DETECTING DEVICES
2.5.1 Heat Detectors
2.5.1.1 Fixed Temperature Detectors
2.5.2 Smoke Detectors
2.5.2.1 Ionization Detectors
2.5.2.2 Photoelectric Detectors
2.5.2.3 Duct Detectors
2.6 NOTIFICATION APPLIANCES
2.6.1 Alarm Bells
2.6.2 Alarm Horns
2.6.3 Visual Notification Appliances
2.6.4 Combination Audible/Visual Notification Appliances
2.7 FIRE DETECTION AND ALARM SYSTEM PERIPHERAL EQUIPMENT
2.7.1 Conduit
2.7.2 Wiring

2.7.3 Special Tools and Spare Parts
2.8 TRANSMITTERS
2.8.1 Radio Alarm Transmitters
2.8.1.1 Transmitter Power Supply
2.8.1.2 Radio Alarm Transmitter Housing
2.8.1.3 Antenna

PART 3 EXECUTION

3.1 INSTALLATION
3.1.1 Power Supply for the System
3.1.2 Wiring
3.1.3 Control Panel
3.1.4 Detectors
3.1.5 Notification Appliances
3.1.6 Annunciator Equipment
3.1.7 Addressable Initiating Device Circuits Module
3.1.8 Addressable Control Module
3.2 OVERVOLTAGE AND SURGE PROTECTION
3.2.1 Power Line Surge Protection
3.2.2 Low Voltage DC Circuits Surge Protection
3.2.3 Signal Line Circuit Surge Protection
3.3 GROUNDING
3.4 TESTING
3.4.1 Preliminary Tests
3.4.2 Acceptance Test
3.5 TRAINING

-- End of Section Table of Contents --

SECTION 13851A

FIRE DETECTION AND ALARM SYSTEM, ADDRESSABLE
02/02

PART 1 GENERAL

1.1 REFERENCES

The publications listed below form a part of this specification to the extent referenced. The publications are referred to in the text by basic designation only.

AMERICAN NATIONAL STANDARDS INSTITUTE (ANSI)

ANSI S3.41	(1990; R 1996) Audible Emergency Evacuation Signal

INSTITUTE OF ELECTRICAL AND ELECTRONICS ENGINEERS (IEEE)

IEEE C62.41	(1991; R 1995) Surge Voltages in Low-Voltage AC Power Circuits

NATIONAL FIRE PROTECTION ASSOCIATION (NFPA)

NFPA 1221	(1999) Installation, Maintenance and Use of Public Fire Service Communication Systems
NFPA 70	(2002) National Electrical Code
NFPA 72	(1999) National Fire Alarm Code
NFPA 90A	(1999) Installation of Air Conditioning and Ventilating Systems

U.S. NATIONAL ARCHIVES AND RECORDS ADMINISTRATION (NARA)

47 CFR 15	Radio Frequency Devices

UNDERWRITERS LABORATORIES (UL)

UL 1242	(1996; Rev Mar 1998) Intermediate Metal Conduit
UL 1971	(1995; Rev thru Apr 1999) Signaling Devices for the Hearing Impaired
UL 268	(1996; Rev thru Jan 1999) Smoke Detectors for Fire Protective Signaling Systems
UL 268A	(1998) Smoke Detectors for Duct Application
UL 38	(1999) Manually Actuated Signaling Boxes for Use with Fire-Protective Signaling Systems
UL 464	(1996; Rev thru May 1999) Audible Signal Appliances
UL 521	(1999) Heat Detectors for Fire Protective Signaling Systems

UL 6	(1997) Rigid Metal Conduit
UL 797	(1993; Rev thru Mar 1997) Electrical Metallic Tubing
UL 864	(1996; Rev thru Mar 1999) Control Units for Fire Protective Signaling Systems

1.2 SUBMITTALS

Government approval is required for submittals with a "G" designation; submittals not having a "G" designation are for information only. When used, a designation following the "G" designation identifies the office that will review the submittal for the Government. The following shall be submitted in accordance with Section 01330 SUBMITTAL PROCEDURES:

SD-02 Shop Drawings

Fire Alarm Reporting System; G-AE

Detail drawings, prepared and signed by a Registered Professional Engineer or a NICET Level 3 Fire Alarm Technician, consisting of a complete list of equipment and material, including manufacturer's descriptive and technical literature, catalog cuts, and installation instructions. Note that the contract drawings show layouts based on typical detectors. The Contractor shall check the layout based on the actual detectors to be installed and make any necessary revisions in the detail drawings. The detail drawings shall also contain complete wiring and schematic diagrams for the equipment furnished, equipment layout, and any other details required to demonstrate that the system has been coordinated and will properly function as a unit. Detailed point-to-point wiring diagram shall be prepared and signed by a Registered Professional Engineer or a NICET Level 3 Fire Alarm Technician showing points of connection. Diagram shall include connections between system devices, appliances, control panels, supervised devices, and equipment that is activated or controlled by the panel.

SD-03 Product Data

Storage Batteries; G-AE

Substantiating battery calculations for supervisory and alarm power requirements. Ampere-hour requirements for each system component and each panel component, and the battery recharging period shall be included.

Voltage Drop; G-AE

Voltage drop calculations for notification appliance circuits to indicate that sufficient voltage is available for proper appliance operation.

Special Tools and Spare Parts; FIO

Spare parts data for each different item of material and equipment specified, not later than 3 months prior to the date of beneficial occupancy. Data shall include a complete list of parts and supplies with the current unit prices and source of supply and a list of the parts recommended by the manufacturer to be replaced after 1 year of service.

Technical Data and Computer Software; G-AE

Technical data which relates to computer software.

Training; G-RE

Lesson plans, operating instructions, maintenance procedures, and training data, furnished in manual format, for the training courses. The operations training shall familiarize designated government personnel with proper operation of the fire alarm system. The maintenance training course shall provide the designated government personnel adequate knowledge required to diagnose, repair, maintain, and expand functions inherent to the system.

Testing; G-RE

Detailed test procedures, prepared and signed by a Registered Professional Engineer or a NICET Level 3 Fire Alarm Technician, for the fire detection and alarm system 60 days prior to performing system tests.

SD-06 Test Reports

Testing; G-RE

Test reports, in booklet form, showing field tests performed to prove compliance with the specified performance criteria, upon completion and testing of the installed system. Each test report shall document readings, test results and indicate the final position of controls. The Contractor shall include the NFPA 72 Certificate of Completion and NFPA 72 Inspection and Testing Form, with the appropriate test reports.

SD-07 Certificates

Equipment; G-RE

Certified copies of current approvals or listings issued by an independent test lab if not listed by UL, FM or other nationally recognized testing laboratory, showing compliance with specified NFPA standards.

Qualifications; G-RE

Proof of qualifications for required personnel. The installer shall submit proof of experience for the Professional Engineer, fire alarm technician, and the installing company.

SD-10 Operation and Maintenance Data

Technical Data and Computer Software; G-RE

Six copies of operating manual outlining step-by-step procedures required for system startup, operation, and shutdown. The manual shall include the manufacturer's name, model number, service manual, parts list, and complete description of equipment and their basic operating features. Six copies of maintenance manual listing routine maintenance procedures, possible breakdowns and repairs, and troubleshooting guide. The manuals shall include conduit layout, equipment layout and simplified wiring, and control diagrams of the system as installed. The manuals shall include complete procedures for system revision and expansion, detailing both equipment and software requirements. Original and backup copies of all software delivered for this project shall be provided, on each type of media utilized. Manuals shall be approved prior to training.

1.3 GENERAL REQUIREMENTS

1.3.1 Standard Products

Material and equipment shall be the standard products of a manufacturer regularly engaged in the manufacture of the products for at least 2 years prior to bid opening. Equipment shall be supported by a service organization that can provide service within 24 hours of notification.

1.3.2 Nameplates

Major components of equipment shall have the manufacturer's name, address, type or style, voltage and current rating, and catalog number on a noncorrosive and nonheat-sensitive plate which is securely attached to the equipment.

1.3.3 Keys and Locks

Locks shall be keyed alike. Four keys for the system shall be provided.

1.3.4 Tags

Tags with stamped identification number shall be furnished for keys and locks.

1.3.5 Verification of Dimensions

After becoming familiar with details of the work, the Contractor shall verify dimensions in the field and shall advise the Contracting Officer of any discrepancy before performing the work.

1.3.6 Compliance

The fire detection and alarm system and the central reporting system shall be configured in accordance with NFPA 72; exceptions are acceptable as directed by the Contracting Officer. The equipment furnished shall be compatible and be UL listed, FM approved, or approved or listed by a nationally recognized testing laboratory in accordance with the applicable NFPA standards.

1.3.7 Qualifications

1.3.7.1 Engineer and Technician

a. Registered Professional Engineer with verification of experience and at least 4 years of current experience in the design of the fire protection and detection systems.

b. National Institute for Certification in Engineering Technologies (NICET) qualifications as an engineering technician in fire alarm systems program with verification of experience and current NICET certificate.

c. The Registered Professional Engineer may perform all required items under this specification. The NICET Fire Alarm Technician shall perform only the items allowed by the specific category of certification held.

1.3.7.2 Installer

The installing Contractor shall provide the following: Fire Alarm Technicians to perform the installation of the system. A Fire Alarm Technician with a minimum of 4 years of experience shall perform/supervise the installation of the fire alarm system. Fire Alarm Technicians with a minimum of 2 years of experience shall be utilized to assist in the installation and terminate fire alarm devices, cabinets and panels. An electrician shall be allowed to install wire or cable and to install conduit for the fire alarm system. The Fire Alarm

technicians installing the equipment shall be factory trained in the installation, adjustment, testing, and operation of the equipment specified herein and on the drawings.

1.3.7.3 Design Services

Installations requiring designs or modifications of fire detection, fire alarm, or fire suppression systems shall require the services and review of a qualified fire protection engineer. For the purposes of meeting this requirement, a qualified fire protection engineer is defined as an individual meeting one of the following conditions:

a. An engineer having a Bachelor of Science or Masters of Science Degree in Fire Protection Engineering from an accredited university engineering program, plus a minimum of 2 years' work experience in fire protection engineering.

b. A registered professional engineer (P.E.) in fire protection engineering.

c. A registered PE in a related engineering discipline and member grade status in the National Society of Fire Protection Engineers.

d. An engineer with a minimum of 10 years' experience in fire protection engineering and member grade status in the National Society of Fire Protection Engineers.

1.4 SYSTEM DESIGN

1.4.1 Operation

The fire alarm and detection system shall be a complete, supervised fire alarm reporting system. The system shall be activated into the alarm mode by actuation of any alarm initiating device. The system shall remain in the alarm mode until the initiating device is reset and the fire alarm control panel is reset and restored to normal. Alarm initiating devices shall be connected to initiating device circuits (IDC), Style D, to signal line circuits (SLC), Style 6, in accordance with NFPA 72. The IDC part of the circuit shall be from the identification module.Alarm notification appliances shall be connected to notification appliance circuits (NAC), Style Z in accordance with NFPA 72. A looped conduit system shall be provided so that if the conduit and all conductors within are severed at any point, all IDC, NAC and SLC will remain functional. The conduit loop requirement is not applicable to the signal transmission link from the local panels (at the protected premises) to the Supervising Station (fire station, fire alarm central communication center). Textual, audible, and visual appliances and systems shall comply with NFPA 72. Fire alarm system components requiring power, except for the control panel power supply, shall operate on 24 Volts dc. Addressable system shall be microcomputer (microprocessor or microcontroller) based with a minimum word size of eight bits and shall provide the following features:

a. Sufficient memory to perform as specified and as shown for addressable system.

b. Individual identity of each addressable device for the following conditions: alarm; trouble; open; short; and appliances missing/failed remote detector - sensitivity adjustment from the panel for smoke detectors

c. Capability of each addressable device being individually disabled or enabled from the panel.

d. Each SLC shall be sized to provide 40 percent addressable expansion

without hardware modifications to the panel.

1.4.2 Operational Features

The system shall have the following operating features:

a. Monitor electrical supervision of IDC, SLC, and NAC. Smoke detectors shall have combined alarm initiating and power circuits.

b. Monitor electrical supervision of the primary power (ac) supply, battery voltage, placement of alarm zone module (card, PC board) within the control panel, and transmitter tripping circuit integrity.

c. A trouble buzzer and trouble LED/LCD (light emitting diode/liquid crystal diode) to activate upon a single break, open, or ground fault condition which prevents the required normal operation of the system. The trouble signal shall also operate upon loss of primary power (ac) supply, low battery voltage, removal of alarm zone module (card, PC board), and disconnection of the circuit used for transmitting alarm signals off-premises. A trouble alarm silence switch shall be provided which will silence the trouble buzzer, but will not extinguish the trouble indicator LED/LCD. Subsequent trouble and supervisory alarms shall sound the trouble signal until silenced. After the system returns to normal operating conditions, the trouble buzzer shall again sound until the silencing switch returns to normal position, unless automatic trouble reset is provided.

d. A one person test mode. Activating an initiating device in this mode will activate an alarm for a short period of time, then automatically reset the alarm, without activating the transmitter during the entire process.

e. A transmitter disconnect switch to allow testing and maintenance of the system without activating the transmitter but providing a trouble signal when disconnected and a restoration signal when reconnected.

f. Evacuation alarm silencing switch which, when activated, will silence alarm devices, but will not affect the zone indicating LED/LCD nor the operation of the transmitter. This switch shall be over-ridden upon activation of a subsequent alarm from an unalarmed device and the NAC devices will be activated.

g. Electrical supervision for circuits used for supervisory signal services (i.e., sprinkler systems, valves, etc.). Supervision shall detect any open, short, or ground.

h. Confirmation or verification of all smoke detectors. The control panel shall interrupt the transmission of an alarm signal to the system control panel for a factory preset period. This interruption period shall be adjustable from 1 to 60 seconds and be factory set at 20 seconds. Immediately following the interruption period, a confirmation period shall be in effect during which time an alarm signal, if present, will be sent immediately to the control panel. Fire alarm devices other than smoke detectors shall be programmed without confirmation or verification.

i. The fire alarm control panel shall provide supervised addressable relays for HVAC shutdown. An override at the HVAC panel shall not be provided.

j. Provide one person test mode - Activating an initiating device in this mode will activate an alarm for a short period of time, then automatically reset the alarm, without activating the transmitter

during the entire process.

k. The fire alarm control panel shall provide the required monitoring and supervised control outputs needed to accomplish elevator recall.

l. The fire alarm control panel shall monitor the fire sprinkler system, or other fire protection extinguishing system.

m. The control panel and field panels shall be software reprogrammable to enable expansion or modification of the system without replacement of hardware or firmware. Examples of required changes are: adding or deleting devices or zones; changing system responses to particular input signals; programming certain input signals to activate auxiliary devices.

1.4.3 Alarm Functions

An alarm condition on a circuit shall automatically initiate the following functions:

a. Transmission of signals over the station radio fire reporting system. The signal shall be common for any device.

b. Visual indications of the alarmed devices on the fire alarm control panel display.

c. Continuous sounding or operation of alarm notification appliances throughout the building as required by ANSI S3.41.

d. Deactivation of the air handling units throughout the building.

1.4.4 Primary Power

Operating power shall be provided as required by paragraph Power Supply for the System. Transfer from normal to emergency power or restoration from emergency to normal power shall be fully automatic and not cause transmission of a false alarm. Loss of ac power shall not prevent transmission of a signal via the fire reporting system upon operation of any initiating circuit.

1.4.5 Battery Backup Power

Battery backup power shall be through use of rechargeable, sealed-type storage batteries and battery charger.

1.4.6 Interface With other Equipment

Interfacing components shall be furnished as required to connect to subsystems or devices which interact with the fire alarm system, such as supervisory or alarm contacts in suppression systems, operating interfaces for smoke control systems, door releases, etc.

1.5 TECHNICAL DATA AND COMPUTER SOFTWARE

Technical data and computer software (meaning technical data which relates to computer software) which is specifically identified in this project, and which may be defined/required in other specifications, shall be delivered, strictly in accordance with the CONTRACT CLAUSES, and in accordance with the Contract Data Requirements List, DD Form 1423. Data delivered shall be identified by reference to the particular specification paragraph against which it is furnished. Data to be submitted shall include complete system, equipment, and software descriptions. Descriptions shall show how the equipment will operate as a system to meet the performance requirements of this contract. The data package shall also include the following:

(1) Identification of programmable portions of system equipment and capabilities.

(2) Description of system revision and expansion capabilities and methods of implementation detailing both equipment and software requirements.

(3) Provision of operational software data on all modes of programmable portions of the fire alarm and detection system.

(4) Description of Fire Alarm Control Panel equipment operation.

(5) Description of auxiliary and remote equipment operations.

(6) Library of application software.

(7) Operation and maintenance manuals as specified in SD-19 of the Submittals paragraph.

1.6 DELIVERY AND STORAGE

Equipment delivered and placed in storage shall be stored with protection from the weather, humidity and temperature variation, dirt, dust, and any other contaminants.

PART 2 PRODUCTS

2.1 CONTROL PANEL

Control Panel shall comply with the applicable requirements of UL 864. Panel shall be modular, installed in a flush mounted steel cabinet with hinged door and cylinder lock. Control panel shall be a clean, uncluttered, and orderly assembled panel containing components and equipment required to provide the specified operating and supervisory functions of the system. The panel shall have prominent rigid plastic, phenolic or metal identification plates for LED/LCDs, zones, SLC, controls, meters, fuses, and switches. Nameplates for fuses shall also include ampere rating. The LED/LCD displays shall be located on the exterior of the cabinet door or be visible through the cabinet door. Control panel switches shall be within the locked cabinet. A suitable means (single operation) shall be provided for testing the control panel visual indicating devices (meters or LEDs/LCDs). Meters and LEDs shall be plainly visible when the cabinet door is closed. Signals and LEDs/LCDs shall be provided to indicate by zone any alarm, supervisory or trouble condition on the system. Each IDC shall be powered and supervised so that a signal on one zone does not prevent the receipt of signals from other devices. Loss of power, including batteries, shall not require the manual reloading of a program. Upon restoration of power, startup shall be automatic, and shall not require any manual operation. The loss of primary power or the sequence of applying primary or emergency power shall not affect the transmission of alarm, supervisory or trouble signals. Visual annunciation shall be provided for LED/LCD visual display as an integral part of the control panel and shall identify with a word description and id number each device. Cabinets shall be provided with ample gutter space to allow proper clearance between the cabinet and live parts of the panel equipment. If more than one modular unit is required to form a control panel, the units shall be installed in a single cabinet large enough to accommodate units. Cabinets shall be painted red.

2.1.1 Circuit Connections

Circuit conductors entering or leaving the panel shall be connected to screw-type terminals with each conductor and terminal marked for identification.

2.1.2 System Expansion and Modification Capabilities

Any equipment and software needed by qualified technicians to implement future changes to the fire alarm system shall be provided as part of this contract.

2.1.3 Addressable Control Module

The control module shall be capable of operating as a relay (dry contact form C) for interfacing the control panel with other systems, and to control door holders or initiate elevator fire service. The module shall be UL listed as compatible with the control panel. The indicating device or the external load being controlled shall be configured as a Style Y notification appliance circuits. The system shall be capable of supervising, audible, visual and dry contact circuits. The control module shall have both an input and output address. The supervision shall detect a short on the supervised circuit and shall prevent power from being applied to the circuit. The control model shall provide address setting means compatible with the control panel's SLC supervision and store an internal identifying code. The control module shall contain an integral LED that flashes each time the control module is polled.

2.1.4 Addressable Initiating Device Circuits Module

The initiating device being monitored shall be configured as a Style D initiating device circuits. The system shell be capable of defining any module as an alarm module and report alarm trouble, loss of polling, or as a supervisory module, and reporting supervisory short, supervisory open or loss of polling. The module shall be UL listed as compatible with the control panel. The monitor module shall provide address setting means compatible with the control panel's SLC supervision and store an internal identifying code. Monitor module shall contain an integral LED that flashes each time the monitor module is polled. Pull stations with a monitor module in a common backbox are not required to have an LED.

2.2 STORAGE BATTERIES

Storage batteries shall be provided and shall be 24 Vdc sealed, lead-calcium type requiring no additional water. The batteries shall have ample capacity, with primary power disconnected, to operate the fire alarm system for a period of 72 hours. Following this period of battery operation, the batteries shall have ample capacity to operate all components of the system, including all alarm signaling devices in the total alarm mode for a minimum period of 15 minutes. Batteries shall be located at the bottom of the panel or in a separate battery cabinet. Batteries shall be provided with overcurrent protection in accordance with NFPA 72. Separate battery cabinets shall have a lockable, hinged cover similar to the fire alarm panel. The lock shall be keyed the same as the fire alarm control panel. Cabinets shall be painted to match the fire alarm control panel.

2.3 BATTERY CHARGER

Battery charger shall be completely automatic, 24 Vdc with high/low charging rate, capable of restoring the batteries from full discharge (18 Volts dc) to full charge within 48 hours. A pilot light indicating when batteries are manually placed on a high rate of charge shall be provided as part of the unit assembly, if a high rate switch is provided. Charger shall be located in control panel cabinet or in a separate battery cabinet.

2.4 ADDRESSABLE MANUAL FIRE ALARM STATIONS

Addressable manual fire alarm stations shall conform to the applicable requirements of UL 38. Manual stations shall be connected into signal line circuits. Stations shall be installed on surface or semi-flush mounted outlet boxes in industrial areas and on flush mounted boxes in finished areas. Manual stations shall be mounted at 48 inches. Stations shall be double action type.

Stations shall be finished in red, with raised letter operating instructions of contrasting color. Stations requiring the breaking of glass or plastic panels for operation are not acceptable. Stations employing glass rods are not acceptable. The use of a key or wrench shall be required to reset the station. Gravity or mercury switches are not acceptable. Switches and contacts shall be rated for the voltage and current upon which they operate. Addressable pull stations shall be capable of being field programmed, shall latch upon operation and remain latched until manually reset. Stations shall have a separate screw terminal for each conductor. Surface mounted boxes shall be matched and painted the same color as the mounting surface.

2.5 FIRE DETECTING DEVICES

Fire detecting devices shall comply with the applicable requirements of NFPA 72, NFPA 90A, UL 268, UL 268A, and UL 521. The detectors shall be provided as indicated. Detector base shall have screw terminals for making connections. No solder connections will be allowed. Detectors located in concealed locations (above ceiling, raised floors, etc.) shall have a remote visible indicator LED/LCD. Addressable fire detecting devices, except flame detectors, shall be dynamically supervised and uniquely identified in the control panel. All fire alarm initiating devices shall be individually addressable, except where indicated. Installed devices shall conform to NFPA 70 hazard classification of the area where devices are to be installed.

2.5.1 Heat Detectors

Heat detectors shall be designed for detection of fire by fixed temperature. Heat detector spacing shall be rated in accordance with UL 521. Detectors located in areas subject to moisture, exterior atmospheric conditions, or hazardous locations as defined by NFPA 70 and as shown on drawings, shall be types approved for such locations. Heat detectors located in attic spaces or similar concealed spaces below the roof shall be intermediate temperature rated.

2.5.1.1 Fixed Temperature Detectors

Detectors shall be designed for surface outlet box mounting and supported independently of wiring connections. Detectors shall be designed to detect high heat. The detectors shall have a specific temperature setting of 135 degrees F. The UL 521 test rating for the fixed temperature detectors shall be rated for 15 by 15 ft.

2.5.2 Smoke Detectors

Smoke detectors shall be designed for detection of abnormal smoke densities. Smoke detectors shall be ionization type. Detectors shall contain a visible indicator LED/LCD that shows when the unit is in alarm condition. Detectors shall not be adversely affected by vibration or pressure. Detectors shall be the plug-in type in which the detector base contains terminals for making wiring connections. Detectors that are to be installed in concealed (above false ceilings, etc.) locations shall be provided with a remote indicator LED/LCD suitable for mounting in a finished, visible location.

2.5.2.1 Ionization Detectors

Ionization detectors with a dual chamber shall be responsive to both invisible and visible particles of combustion. One chamber shall be a reference chamber and the second a sampling chamber. Detectors containing radium shall not be provided. Detectors shall not cause an alarm condition due to anticipated fluctuations in relative humidity. The sensitivity of the detector shall be field adjustable to compensate for operating conditions. Detector shall require no replacement or readjustment to restore it to normal operation after an alarm condition. Each detector shall be capable of withstanding ambient air velocity up to 300 fpm in accordance with UL 268. Addressable smoke detectors

shall be capable of having the sensitivity being remotely adjusted by the control panel.

2.5.2.2 Photoelectric Detectors

Detectors shall operate on a light scattering concept using an LED light source. Failure of the LED shall not cause an alarm condition. Detectors shall be factory set for sensitivity and shall require no field adjustments of any kind. Detectors shall have an obscuration rating in accordance with UL 268. Addressable smoke detectors shall be capable of having the sensitivity being remotely adjusted by the control panel.

2.5.2.3 Duct Detectors

Duct-mounted photoelectric smoke detectors shall be furnished and installed where indicated and in accordance with NFPA 90A. Units shall consist of a smoke detector as specified in paragraph Photoelectric Detectors, mounted in a special housing fitted with duct sampling tubes. Detector circuitry shall be mounted in a metallic enclosure exterior to the duct. Detectors shall have a manual reset. Detectors shall be rated for air velocities that include air flows between 500 and 4000 fpm. Detectors shall be powered from the fire alarm panel. Sampling tubes shall run the full width of the duct. The duct detector package shall conform to the requirements of NFPA 90A, UL 268A, and shall be UL listed for use in air-handling systems. The control functions, operation, reset, and bypass shall be controlled from the fire alarm control panel. Lights to indicate the operation and alarm condition; and the test and reset buttons shall be visible and accessible with the unit installed and the cover in place. Detectors mounted above 6 feet and those mounted below 6 feet that cannot be easily accessed while standing on the floor, shall be provided with a remote detector indicator panel containing test and reset switches. Remote lamps and switches as well as the affected fan units shall be properly identified in etched plastic placards. Detectors shall have auxiliary contacts to provide control, interlock, and shutdown functions specified in Section 15951A DIRECT DIGITAL CONTROL FOR HVAC. The detectors shall be supplied by the fire alarm system manufacturer to ensure complete system compatibility.

2.6 NOTIFICATION APPLIANCES

Audible appliances shall conform to the applicable requirements of UL 464. Devices shall be connected into notification appliance circuits. Devices shall have a separate screw terminal for each conductor. Audible appliances shall generate a unique audible sound from other devices provided in the building and surrounding area. Surface mounted audible appliances shall be painted red . Recessed audible appliances shall be installed with a grill that is painted with a factory finish to match the surface to which it is mounted.

2.6.1 Alarm Bells

Bells shall be surface mounted with the matching mounting back box surface mounted . Bells shall be suitable for use in an electrically supervised circuit. Bells shall be the underdome type producing a minimum output rating of 85 dBA at 10 feet. Bells used in exterior locations shall be specifically listed or approved for outdoor use and be provided with metal housing and protective grilles. Single stroke, electrically operated, supervised, solenoid bells shall be used for coded applications.

2.6.2 Alarm Horns

Horns shall be surface mounted, with the matching mounting back box surface mounted grille and vibrating type suitable for use in an electrically supervised circuit. Horns installed in finished areas shall have recessed back boxes. Horns shall produce a sound rating of at least 85 dBA at 10 feet. Horns used in exterior locations shall be specifically listed or approved for

outdoor use and be provided with metal housing and protective grilles.

2.6.3 Visual Notification Appliances

Visual notification appliances shall conform to the applicable requirements of UL 1971 and the contract drawings. Appliances shall have clear high intensity optic lens, xenon flash tubes, and output white light. Strobe flash rate shall be between 1 to 3 flashes per second and a minimum of 75 candela. Strobe shall be surface mounted. Semi-flush mounted shall be used in areas with finished walls.

2.6.4 Combination Audible/Visual Notification Appliances

Combination audible/visual notification appliances shall provide the same requirements as individual units except they shall mount as a unit in standard backboxes. Units shall be factory assembled. Any other audible notification appliance employed in the fire alarm systems shall be approved by the Contracting Officer.

2.7 FIRE DETECTION AND ALARM SYSTEM PERIPHERAL EQUIPMENT

2.7.1 Conduit

Conduit and fittings shall comply with NFPA 70, UL 6, UL 1242, and UL 797.

2.7.2 Wiring

Wiring shall conform to NFPA 70. Wiring for 120 Vac power shall be No. 12 AWG minimum. The SLC wiring shall be copper cable in accordance with the manufacturers requirements. Wiring for fire alarm dc circuits shall be No. 16 AWG minimum. Voltages shall not be mixed in any junction box, housing, or device, except those containing power supplies and control relays. Wiring shall conform to NFPA 70. System field wiring shall be solid copper and installed in metallic conduit or electrical metallic tubing, except that rigid plastic conduit may be used under slab-on-grade. Conductors shall be color coded. Conductors used for the same functions shall be similarly color coded. Wiring code color shall remain uniform throughout the circuit. Pigtail or T-tap connections to initiating device circuits, supervisory alarm circuits, and notification appliance circuits are prohibited. T-tapping using screw terminal blocks is allowed for style 5 addressable systems.

2.7.3 Special Tools and Spare Parts

Software, connecting cables and proprietary equipment, necessary for the maintenance, testing, and reprogramming of the equipment shall be furnished to the Contracting Officer. Two spare fuses of each type and size required shall be furnished. Two percent of the total number of each different type of detector, but no less than two each, shall be furnished. Spare fuses shall be mounted in the fire alarm panel.

2.8 TRANSMITTERS

2.8.1 Radio Alarm Transmitters

Transmitters shall be compatible with proprietary supervising station receiving equipment. Each radio alarm transmitter shall be the manufacturer's recognized commercial product, completely assembled, wired, factory tested, and delivered ready for installation and operation. Transmitters shall be provided in accordance with applicable portions of NFPA 72, NFPA 1221, and 47 CFR 15. Transmitter electronics module shall be contained within the physical housing as an integral, removable assembly. The proprietary supervising station receiving equipment is by Monaco and the transceiver shall be fully compatible with this equipment. At the contractors option, and if UL listed, the

transmitter may be housed in the same panel as the fire alarm control panel. The frequency used at the base is 138.25 MHz. Use enhanced transmitter package and provide any program required at the central station in order to properly receive the new signals.

2.8.1.1 Transmitter Power Supply

Each radio alarm transmitter shall be powered by a combination of locally available 120-volt ac power and a sealed, lead-calcium battery.

a. Operation: Each transmitter shall operate from 120-volt ac power. In the event of 120-volt ac power loss, the transmitter shall automatically switch to battery operation. Switchover shall be accomplished with no interruption of protective service, and shall automatically transmit a trouble message. Upon restoration of ac power, transfer back to normal ac power supply shall also be automatic.

b. Battery Power: Transmitter standby battery capacity shall provide sufficient power to operate the transmitter in a normal standby status for a minimum of 72 hours and be capable of transmitting alarms during that period.

2.8.1.2 Radio Alarm Transmitter Housing

Transmitter housing shall be NEMA Type 1. The housing shall contain a lock that is keyed identical to the fire alarm system for the building. Radio alarm transmitter housing shall be factory painted with a suitable priming coat and not less than two coats of a hard, durable weatherproof enamel.

2.8.1.3 Antenna

The Contractor shall provide omnidirectional, coaxial, halfwave dipole antennas for radio alarm transmitters with a driving point impedance to match transmitter output. The antenna and antenna mounts shall be corrosion resistant and designed to withstand wind velocities of 100 mph. Antennas shall not be mounted to any portion of the building roofing system.

PART 3 EXECUTION

3.1 INSTALLATION

All work shall be installed as shown, and in accordance with NFPA 70 and NFPA 72, and in accordance with the manufacturer's diagrams and recommendations, unless otherwise specified. Smoke detectors shall not be installed until construction is essentially complete and the building has been thoroughly cleaned.

3.1.1 Power Supply for the System

A single dedicated circuit connection for supplying power from a branch circuit to each building fire alarm system shall be provided. The power shall be supplied as shown on the drawings. The power supply shall be equipped with a locking mechanism and marked in red with the words "FIRE ALARM CIRCUIT CONTROL".

3.1.2 Wiring

Conduit size for wiring shall be in accordance with NFPA 70. Wiring for the fire alarm system shall not be installed in conduits, junction boxes, or outlet boxes with conductors of lighting and power systems. Not more than two conductors shall be installed under any device screw terminal. The wires under the screw terminal shall be straight when placed under the terminal then clamped in place under the screw terminal. The wires shall be broken and not twisted around the terminal. Circuit conductors entering or leaving any mounting box, outlet box enclosure, or cabinet shall be connected to screw terminals with each

terminal and conductor marked in accordance with the wiring diagram. Connections and splices shall be made using screw terminal blocks. The use of wire nut type connectors in the system is prohibited. Wiring within any control equipment shall be readily accessible without removing any component parts. The fire alarm equipment manufacturer's representative shall be present for the connection of wiring to the control panel.

3.1.3 Control Panel

The control panel and its assorted components shall be mounted so that no part of the enclosing cabinet is less than 12 inches nor more than 78 inches above the finished floor. Manually operable controls shall be between 36 and 42 inches above the finished floor. Panel shall be installed to comply with the requirements of UL 864.

3.1.4 Detectors

Detectors shall be located and installed in accordance with NFPA 72. Detectors shall be connected into signal line circuits or initiating device circuits as indicated on the drawings. Detectors shall be at least 12 inches from any part of any lighting fixture. Detectors shall be located at least 3 feet from diffusers of air handling systems. Each detector shall be provided with appropriate mounting hardware as required by its mounting location. Detectors which mount in open space shall be mounted directly to the end of the stubbed down rigid conduit drop. Conduit drops shall be firmly secured to minimize detector sway. Where length of conduit drop from ceiling or wall surface exceeds 3 feet, sway bracing shall be provided. Detectors installed in concealed locations (above ceiling, raised floors, etc.) shall have a remote visible indicator LED/LCD in a finished, visible location .

3.1.5 Notification Appliances

Notification appliances shall be mounted 80 inches above the finished floor or 6 inches below the ceiling, whichever is lower.

3.1.6 Annunciator Equipment

Annunciator equipment shall be mounted where indicated on the drawings.

3.1.7 Addressable Initiating Device Circuits Module

The initiating device circuits module shall be used to connect supervised conventional initiating devices (water flow switches, water pressure switches, manual fire alarm stations, high/low air pressure switches, and tamper switches). The module shall mount in an electrical box adjacent to or connected to the device it is monitoring and shall be capable of Style B supervised wiring to the initiating device. In order to maintain proper supervision, there shall be no T-taps allowed on style B lines. Addressable initiating device circuits modules shall monitor only one initiating device each. Contacts in suppression systems and other fire protection subsystems shall be connected to the fire alarm system to perform supervisory and alarm functions as specified in Section 13930A WET PIPE SPRINKLER SYSTEM, FIRE PROTECTION and NFPA 72, as indicated on the drawings and as specified herein.

3.1.8 Addressable Control Module

Addressable and control modules shall be installed in the outlet box or adjacent to the device they are controlling. If a supplementary suppression releasing panel is provided, then the monitor modules shall he mounted in a common enclosure adjacent to the suppression releasing panel and both this enclosure and the suppression releasing panel shall be in the same room as the releasing devices. All interconnecting wires shall be supervised unless an open circuit or short circuit abnormal condition does not affect the required

operation of the fire alarm system. If control modules are used as interfaces to other systems, such as HVAC or elevator control, they shall be within the control panel or immediately adjacent to it. Control modules that control a group of notification appliances shall be adjacent to the first notification appliance in the notification appliance circuits. Control modules that connect to devices shall supervise the notification appliance circuits. Control modules that connect to auxiliary systems or interface with other systems (non-life safety systems) and where not required by NFPA 72, shall not require the secondary circuits to be supervised. Contacts in suppression systems and other fire protection subsystems shall be connected to the fire alarm system to perform required alarm functions as specified in Section 13930A WET PIPE SPRINKLER SYSTEM, FIRE PROTECTION and NFPA 72, as indicated on the drawings and as specified herein.

3.2 OVERVOLTAGE AND SURGE PROTECTION

3.2.1 Power Line Surge Protection

All equipment connected to alternating current circuits shall be protected from surges per IEEE C62.41 B3 combination waveform and NFPA 70. Fuses shall not be used for surge protection. The surge protector shall be rated for a maximum let thru voltage of 350 Volts ac (line-to-neutral) and 350 Volt ac (neutral-to-ground).

3.2.2 Low Voltage DC Circuits Surge Protection

All IDC, NAC, and communication cables/conductors, except fiber optics, shall have surge protection installed at each point where it exits or enters a building. Equipment shall be protected from surges per IEEE C62.41 B3 combination waveform and NFPA 70. The surge protector shall be rated to protect the 24 Volt dc equipment. The maximum dc clamping voltages shall be 36 V (line-to-ground) and 72 Volt dc (line-to-line).

3.2.3 Signal Line Circuit Surge Protection

All SLC cables/conductors, except fiber optics, shall have surge protection/isolation circuits installed at each point where it exits or enters a building. The circuit shall be protected from surges per IEEE C62.41 B3 combination waveform and NFPA 70. The surge protector/isolator shall be rated to protect the equipment.

3.3 GROUNDING

Grounding shall be provided by connecting to building ground system.

3.4 TESTING

The Contractor shall notify the Contracting Officer at least 10 days before the preliminary and acceptance tests are to be conducted. The tests shall be performed in accordance with the approved test procedures in the presence of the Contracting Officer. The control panel manufacturer's representative shall be present to supervise tests. The Contractor shall furnish instruments and personnel required for the tests.

3.4.1 Preliminary Tests

Upon completion of the installation, the system shall be subjected to functional and operational performance tests including tests of each installed initiating and notification appliance, when required. Tests shall include the meggering of system conductors to determine that the system is free from grounded, shorted, or open circuits. The megger test shall be conducted prior to the installation of fire alarm equipment. If deficiencies are found, corrections shall be made and the system shall be retested to assure that it is functional.

After completing the preliminary testing the Contractor shall complete and submit the NFPA 72, Certificate of Completion.

3.4.2 Acceptance Test

Acceptance testing shall not be performed until the Contractor has completed and submitted the Certificate of Completion. Testing shall be in accordance with NFPA 72. The recommended tests in NFPA 72 shall be considered mandatory and shall verify that previous deficiencies have been corrected. The Contractor shall complete and submit the NFPA 72, Inspection and Testing Form. The test shall include all requirements of NFPA 72 and the following:

a. Test of each function of the control panel.

b. Test of each circuit in both trouble and normal modes.

c. Tests of each alarm initiating devices in both normal and trouble conditions.

d. Tests of each control circuit and device.

e. Tests of each alarm notification appliance.

f. Tests of the battery charger and batteries.

g. Complete operational tests under emergency power supply.

h. Visual inspection of wiring connections.

i. Opening the circuit at each alarm initiating device and notification appliance to test the wiring supervisory feature.

j. Ground fault

k. Short circuit faults

l. Stray voltage

m. Loop resistance

3.5 TRAINING

Training course shall be provided for the operations and maintenance staff. The course shall be conducted in the building where the system is installed or as designated by the Contracting Officer. The training period for systems operation shall consist of 1 training days (8 hours per day) and shall start after the system is functionally completed but prior to final acceptance tests. The training period for systems maintenance shall consist of 1 training days (8 hours per day) and shall start after the system is functionally completed but prior to final acceptance tests. The instructions shall cover items contained in the operating and maintenance instructions. In addition, training shall be provided on performance of expansions or modifications to the fire detection and alarm system. The training period for system expansions and modifications shall consist of at least 1 training days (8 hours per day) and shall start after the system is functionally completed but prior to final acceptance tests.

-- End of Section --

SECTION TABLE OF CONTENTS

DIVISION 13 - SPECIAL CONSTRUCTION

SECTION 13930A

WET PIPE SPRINKLER SYSTEM, FIRE PROTECTION

11/99

PART 1 GENERAL

1.1 REFERENCES
1.2 GENERAL REQUIREMENTS
1.2.1 Hydraulic Design
1.2.1.1 Hose Demand
1.2.1.2 Basis for Calculations
1.2.2 Sprinkler Spacing
1.3 COORDINATION OF TRADES
1.4 DELIVERY AND STORAGE
1.5 FIELD MEASUREMENTS
1.6 SUBMITTALS
1.7 HYDRAULIC CALCULATIONS
1.8 FIRE PROTECTION SPECIALIST
1.9 SPRINKLER SYSTEM INSTALLER QUALIFICATIONS
1.10 REGULATORY REQUIREMENTS

PART 2 PRODUCTS

2.1 STANDARD PRODUCTS
2.2 NAMEPLATES
2.3 REQUIREMENTS FOR FIRE PROTECTION SERVICE
2.4 UNDERGROUND PIPING COMPONENTS
2.4.1 Pipe
2.4.2 Fittings and Gaskets
2.4.3 Gate Valve and Indicator Posts
2.5 ABOVEGROUND PIPING COMPONENTS
2.5.1 Steel Piping Components
2.5.1.1 Steel Pipe
2.5.1.2 Fittings for Non-Grooved Steel Pipe
2.5.1.3 Grooved Mechanical Joints and Fittings
2.5.1.4 Flanges
2.5.2 Pipe Hangers
2.5.3 Valves
2.5.3.1 Control Valve and Gate Valve
2.5.3.2 Check Valve
2.6 WATERFLOW ALARM
2.7 ALARM INITIATING AND SUPERVISORY DEVICES
2.7.1 Sprinkler Waterflow Indicator Switch, Vane Type
2.7.2 Valve Supervisory (Tamper) Switch
2.8 FIRE DEPARTMENT CONNECTION
2.8.1 WALL HYDRANT
2.9 SPRINKLERS
2.9.1 Pendent Sprinkler
2.9.2 Upright Sprinkler
2.9.3 Sidewall Sprinkler

2.9.4 Dry Sprinkler Assembly
2.10 DISINFECTING MATERIALS
2.10.1 Liquid Chlorine
2.10.2 Hypochlorites
2.11 ACCESSORIES
2.11.1 Sprinkler Cabinet
2.11.2 Pendent Sprinkler Escutcheon
2.11.3 Pipe Escutcheon
2.11.4 Sprinkler Guard
2.11.5 Identification Sign
2.12 DOUBLE-CHECK VALVE BACKFLOW PREVENTION ASSEMBLY

PART 3 EXECUTION

3.1 FIRE PROTECTION RELATED SUBMITTALS
3.2 INSTALLATION REQUIREMENTS
3.3 INSPECTION BY FIRE PROTECTION SPECIALIST
3.4 ABOVEGROUND PIPING INSTALLATION
3.4.1 Force Protection
3.4.2 Piping in Exposed Areas
3.4.3 Piping in Finished Areas
3.4.4 Pendent Sprinklers
3.4.4.1 Pendent Sprinkler Locations
3.4.5 Upright Sprinklers
3.4.6 Pipe Joints
3.4.7 Reducers
3.4.8 Pipe Penetrations
3.4.9 Escutcheons
3.4.10 Inspector's Test Connection
3.4.11 Drains
3.4.12 Installation of Fire Department Connection
3.4.13 Identification Signs
3.5 UNDERGROUND PIPING INSTALLATION
3.6 EARTHWORK
3.7 ELECTRICAL WORK
3.8 DISINFECTION
3.9 PIPE COLOR CODE MARKING
3.10 PRELIMINARY TESTS
3.10.1 Underground Piping
3.10.1.1 Flushing
3.10.1.2 Hydrostatic Testing
3.10.2 Aboveground Piping
3.10.2.1 Hydrostatic Testing
3.10.2.2 Backflow Prevention Assembly Forward Flow Test
3.10.3 Testing of Alarm Devices
3.10.4 Main Drain Flow Test
3.11 FINAL ACCEPTANCE TEST
3.12 ON-SITE TRAINING

-- End of Section Table of Contents --

SECTION 13930A

WET PIPE SPRINKLER SYSTEM, FIRE PROTECTION
11/99

PART 1 GENERAL

1.1 REFERENCES

The publications listed below form a part of this specification to the extent referenced. The publications are referred to in the text by basic designation only.

AMERICAN SOCIETY FOR TESTING AND MATERIALS (ASTM)

ASTM A 47/A 47M	(1999) Ferritic Malleable Iron Castings
ASTM A 53/A 53M	(1999b) Pipe, Steel, Black and Hot-Dipped, Zinc-Coated, Welded and Seamless
ASTM A 135	(1997c) Electric-Resistance-Welded Steel Pipe
ASTM A 183	(1983; R 1998) Carbon Steel Track Bolts and Nuts
ASTM A 536	(1984; R 1999el) Ductile Iron Castings
ASTM A 795	(1997) Black and Hot-Dipped Zinc-Coated (Galvanized) Welded and Seamless Steel Pipe for Fire Protection Use

ASME INTERNATIONAL (ASME)

ASME B16.1	(1998) Cast Iron Pipe Flanges and Flanged Fittings
ASME B16.3	(1998) Malleable Iron Threaded Fittings
ASME B16.4	(1998) Cast Iron Threaded Fittings
ASME B16.9	(1993) Factory-Made Wrought Steel Buttwelding Fittings
ASME B16.11	(1996) Forged Fittings, Socket-Welding and Threaded
ASME B16.21	(1992) Nonmetallic Flat Gaskets for Pipe Flanges
ASME B18.2.1	(1996) Square and Hex Bolts and Screws (Inch Series)
ASME B18.2.2	(1987; R 1993) Square and Hex Nuts (Inch Series)

AMERICAN SOCIETY OF SANITARY ENGINEERING (ASSE)

ASSE 1015	(1993) Double Check Backflow Prevention Assembly

AMERICAN WATER WORKS ASSOCIATION (AWWA)

AWWA EWW	(1999) Standard Methods for the Examination of Water and Wastewater
AWWA B300	(1999) Hypochlorites
AWWA B301	(1992; addenda B301a - 1999) Liquid Chlorine
AWWA C104	(1995) Cement-Mortar Lining for Ductile-Iron Pipe and Fittings for Water
AWWA C110	(1998) Ductile-Iron and Gray-Iron Fittings, 3 In. Through 48 In. (75 mm through 1200 mm), for Water and Other Liquids
AWWA C111	(1995) Rubber-Gasket Joints for Ductile-Iron Pressure Pipe and Fittings
AWWA C151	(1996) Ductile-Iron Pipe, Centrifugally Cast, for Water or Other Liquids
AWWA C203	(1997; addenda C203a - 1999) Coal-Tar Protective Coatings and Linings for Steel Water Pipelines - Enamel and Tape - Hot-Applied
AWWA M20	(1973) Manual: Water Chlorination Principles and Practices

FACTORY MUTUAL ENGINEERING AND RESEARCH (FM)

FM P7825a	(1998) Approval Guide Fire Protection
FM P7825b	(1998) Approval Guide Electrical Equipment

MANUFACTURERS STANDARDIZATION SOCIETY OF THE VALVE AND FITTINGS INDUSTRY (MSS)

MSS SP-71	(1997) Gray Iron Swing Check Valves, Flanges and Threaded Ends

NATIONAL FIRE PROTECTION ASSOCIATION (NFPA)

NFPA 13	(1999) Installation of Sprinkler Systems
NFPA 24	(1995) Installation of Private Fire Service Mains and Their Appurtenances
NFPA 1963	(1998) Fire Hose Connections

NATIONAL INSTITUTE FOR CERTIFICATION IN ENGINEERING TECHNOLOGIES (NICET)

NICET 1014-7	(1995) Program Detail Manual for Certification in the Field of Fire Protection Engineering Technology (Field Code 003) Subfield of Automatic Sprinkler System Layout

UNDERWRITERS LABORATORIES (UL)

UL Bld Mat Dir	(1999) Building Materials Directory
UL Fire Prot Dir	(1999) Fire Protection Equipment Directory

1.2 GENERAL REQUIREMENTS

Wet pipe sprinkler system shall be provided in all areas of the building. The sprinkler system shall provide fire sprinkler protection for the entire area. Except as modified herein, the system shall be designed and installed in accordance with NFPA 13. Pipe sizes which are not indicated on drawings shall be determined by hydraulic calculation. The Contractor shall design any portions of the sprinkler system that are not indicated on the drawings including locating sprinklers, piping and equipment, and size piping and equipment when this information is not indicated on the drawings or is not specified herein. The design of the sprinkler system shall be based on hydraulic calculations, and the other provisions specified herein.

1.2.1 Hydraulic Design

The system shall be hydraulically designed to discharge a minimum density of 0.15 gpm per square foot over the hydraulically most demanding 3,000 square feet of floor area. The minimum pipe size for branch lines in gridded systems shall be 1-1/4 inch. Hydraulic calculations shall be in accordance with the Area/Density Method of NFPA 13. Water velocity in the piping shall not exceed 20 ft/s.

1.2.1.1 Hose Demand

An allowance for exterior hose streams of 500 gpm shall be added to the sprinkler system demand at the point of connection to the existing system.

1.2.1.2 Basis for Calculations

The design of the system shall be based upon a water supply as shown on the drawings. Water supply shall be presumed available at the point of connection to existing. Hydraulic calculations shall be based upon the Hazen-Williams formula with a "C" value of 120 for steel piping, 150 for copper tubing, 140 for new cement-lined ductile-iron piping, and 100 for existing underground piping.

1.2.2 Sprinkler Spacing

Sprinklers shall be uniformly spaced on branch lines. Maximum spacing per sprinkler shall not exceed limits specified in NFPA 13 for the hazard occupancy.

1.3 COORDINATION OF TRADES

Piping offsets, fittings, and any other accessories required shall be furnished as required to provide a complete installation and to eliminate interference with other construction. Sprinkler shall be installed over and under ducts, piping and platforms when such equipment can negatively effect or disrupt the sprinkler discharge pattern and coverage.

1.4 DELIVERY AND STORAGE

All equipment delivered and placed in storage shall be housed in a manner to preclude any damage from the weather, humidity and temperature variations, dirt and dust, or other contaminants. Additionally, all pipes shall either be capped or plugged until installed.

1.5 FIELD MEASUREMENTS

The Contractor shall become familiar with all details of the work, verify all dimensions in the field, and shall advise the Contracting Officer of any discrepancy before performing the work.

1.6 SUBMITTALS

Government approval is required for submittals with a "G" designation; submittals not having a "G" designation are for information only. When used, a designation following the "G" designation identifies the office that will review the submittal for the Government. The following shall be submitted in accordance with Section 01330 SUBMITTAL PROCEDURES::

SD-02 Shop Drawings

Sprinkler System Shop Drawings; G-AE.

Three copies of the Sprinkler System Shop Drawings, no later than 21 days prior to the start of sprinkler system installation. The Sprinkler System Shop Drawings shall conform to the requirements established for working plans as prescribed in NFPA 13. Drawings shall include plan and elevation views demonstrating that the equipment will fit the allotted spaces with clearance for installation and maintenance. Each set of drawings shall include the following:

a. Descriptive index of drawings in the submittal with drawings listed in sequence by drawing number. A legend identifying device symbols, nomenclature, and conventions used.

b. Floor plans drawn to a scale not less than 1/8" = 1'-0" which clearly show locations of sprinklers, risers, pipe hangers, seismic separation assemblies, sway bracing, inspector's test connections, drains, and other applicable details necessary to clearly describe the proposed arrangement. Each type of fitting used and the locations of bushings, reducing couplings, and welded joints shall be indicated.

c. Actual center-to-center dimensions between sprinklers on branch lines and between branch lines; from end sprinklers to adjacent walls; from walls to branch lines; from sprinkler feed mains, cross-mains and branch lines to finished floor and roof or ceiling. A detail shall show the dimension from the sprinkler and sprinkler deflector to the ceiling in finished areas.

d. Longitudinal and transverse building sections showing typical branch line and cross-main pipe routing as well as elevation of each typical sprinkler above finished floor.

e. Details of each type of riser assembly; pipe hanger; sway bracing for earthquake protection, and restraint of underground water main at point-of-entry into the building, and electrical devices and interconnecting wiring.

As-Built Shop Drawings; .

As-built shop drawings, at least 14 days after completion of the Final Tests. The Sprinkler System Drawings shall be updated to reflect as-built conditions after all related work is completed and shall be on reproducible full-size mylar film.

SD-03 Product Data

Fire Protection Related Submittals; .

A list of the Fire Protection Related Submittals, no later than 7 days after the approval of the Fire Protection Specialist.

Load Calculations for Sizing Sway Bracing; G-AE.

For systems that incorporate Force Protection requirements, load calculations shall be provided for sizing of sway bracing. Force Protection Requirements are required for this facility.

Components and Equipment Data; G-AE.

Manufacturer's catalog data included with the Sprinkler System Drawings for all items specified herein. The data shall be highlighted to show model, size, options, etc., that are intended for consideration. Data shall be adequate to demonstrate compliance with all contract requirements. In addition, a complete equipment list that includes equipment description, model number and quantity shall be provided.

Hydraulic Calculations; G-AE.

Hydraulic calculations, including a drawing showing hydraulic reference points and pipe segments.

Spare Parts; .

Spare parts data shall be included for each different item of material and equipment specified. The data shall include a complete list of parts and supplies, with current unit prices and source of supply, and a list of parts recommended by the manufacturer to be replaced after 1 year and 3 years of service. A list of special tools and test equipment required for maintenance and testing of the products supplied by the Contractor shall be included.

Preliminary Tests Procedures; G-F.

Proposed procedures for Preliminary Tests, no later than 14

days prior to the proposed start of the tests.

Final Acceptance Test Procedures; G-F.

Proposed procedures for Final Acceptance Test, no later than 14 days prior to the proposed start of the tests.

On-site Training Schedule; G-F.

Proposed On-site Training schedule, at least 14 days prior to the start of related training.

Preliminary Tests; G-F.

Proposed date and time to begin Preliminary Tests, submitted with the Preliminary Tests Procedures.

Final Acceptance Test; G-F.

Proposed date and time to begin Final Acceptance Test, submitted with the Final Acceptance Test Procedures. Notification shall be provided at least 14 days prior to the proposed start of the test. Notification shall include a copy of the Contractor's Material & Test Certificates.

Fire Protection Specialist Qualifications; G-F.

The name and documentation of certification of the proposed Fire Protection Specialists, no later than 14 days after the Notice to Proceed and prior to the submittal of the sprinkler system drawings and hydraulic calculations.

Sprinkler System Installer Qualifications; G-F.

The name and documentation of certification of the proposed Sprinkler System Installer, concurrent with submittal of the Fire Protection Specialist Qualifications.

SD-06 Test Reports

Preliminary Tests Report; G-F.

Three copies of the completed Preliminary Tests Reports, no later that 7 days after the completion of the Preliminary Tests. The Preliminary Tests Report shall include both the Contractor's Material and Test Certificate for Underground Piping and the Contractor's Material and Test Certificate for Aboveground Piping. All items in the Preliminary Tests Report shall be signed by the Fire Protection Specialist.

Final Acceptance Test Report; G-F.

Three copies of the completed Final Acceptance Tests Reports, no later that 7 days after the completion of the Final Acceptance Tests. All items in the Final Acceptance Report shall be signed by the Fire Protection Specialist.

SD-07 Certificates

Fire Protection Specialist Inspection; G-F.

Concurrent with the Final Acceptance Test Report, certification by the Fire Protection Specialist that the sprinkler system is installed in accordance with the contract requirements, including signed approval of the Preliminary and Final Acceptance Test Reports.

SD-10 Operation and Maintenance Data

Wet Pipe Sprinkler System; .

Six manuals listing step-by-step procedures required for system startup, operation, shutdown, and routine maintenance, at least 14 days prior to field training. The manuals shall include the manufacturer's name, model number, parts list, list of parts and tools that should be kept in stock by the owner for routine maintenance including the name of a local supplier, simplified wiring and controls diagrams, troubleshooting guide, and recommended service organization (including address and telephone number) for each item of equipment.

1.7 HYDRAULIC CALCULATIONS

Hydraulic calculations shall be as outlined in NFPA 13 except that calculations shall be performed by computer using software intended specifically for fire protection system design using the design data shown on the drawings. Software that uses k-factors for typical branch lines is not acceptable. Calculations shall be based on the water supply data shown on the drawings. Calculations shall substantiate that the design area used in the calculations is the most demanding hydraulically. Water supply curves and system requirements shall be plotted on semi-logarithmic graph paper so as to present a summary of the complete hydraulic calculation. A summary sheet listing sprinklers in the design area and their respective hydraulic reference points, elevations, actual discharge pressures and actual flows shall be provided. Elevations of hydraulic reference points (nodes) shall be indicated. Documentation shall identify each pipe individually and the nodes connected thereto. The diameter, length, flow, velocity, friction loss, number and type fittings, total friction loss in the pipe, equivalent pipe length and Hazen-Williams coefficient shall be indicated for each pipe. For gridded systems, calculations shall show peaking of demand area friction loss to verify that the hydraulically most demanding area is being used. Also for gridded systems, a flow diagram indicating the quantity and direction of flows shall be included. A drawing showing hydraulic reference points (nodes) and pipe designations used in the calculations shall be included and shall be independent of shop drawings.

1.8 FIRE PROTECTION SPECIALIST

Work specified in this section shall be performed under the supervision of and certified by the Fire Protection Specialist. The Fire Protection Specialist shall be an individual who is a registered professional engineer and a Full Member of the Society of Fire Protection Engineers or who is certified as a Level III Technician by National Institute for Certification in Engineering Technologies (NICET) in the Automatic Sprinkler System Layout subfield of Fire Protection Engineering Technology in accordance with NICET 1014-7. The Fire Protection Specialist shall be regularly engaged in the design and installation of the type and complexity

of system specified in the Contract documents, and shall have served in a similar capacity for at least three systems that have performed in the manner intended for a period of not less than 6 months.

1.9 SPRINKLER SYSTEM INSTALLER QUALIFICATIONS

Work specified in this section shall be performed by the Sprinkler System Installer. The Sprinkler System Installer shall be regularly engaged in the installation of the type and complexity of system specified in the Contract documents, and shall have served in a similar capacity for at least three systems that have performed in the manner intended for a period of not less than 6 months.

1.10 REGULATORY REQUIREMENTS

Compliance with referenced NFPA standards is mandatory. This includes advisory provisions listed in the appendices of such standards, as though the word "shall" had been substituted for the word "should" wherever it appears. In the event of a conflict between specific provisions of this specification and applicable NFPA standards, this specification shall govern. Reference to "authority having jurisdiction" shall be interpreted to mean the Contracting Officer.

PART 2 PRODUCTS

2.1 STANDARD PRODUCTS

Materials and equipment shall be standard products of a manufacturer regularly engaged in the manufacture of such products and shall essentially duplicate items that have been in satisfactory use for at least 2 years prior to bid opening.

2.2 NAMEPLATES

All equipment shall have a nameplate that identifies the manufacturer's name, address, type or style, model or serial number, and catalog number.

2.3 REQUIREMENTS FOR FIRE PROTECTION SERVICE

Materials and Equipment shall have been tested by Underwriters Laboratories, Inc. and listed in UL Fire Prot Dir or approved by Factory Mutual and listed in FM P7825a and FM P7825b. Where the terms "listed" or "approved" appear in this specification, such shall mean listed in UL Fire Prot Dir or FM P7825a and FM P7825b

2.4 UNDERGROUND PIPING COMPONENTS

2.4.1 Pipe

Piping from a point 6 inches above the floor to a point 5 feet outside the building wall shall be ductile iron with a rated working pressure of 175 psi conforming to AWWA C151, with cement mortar lining conforming to AWWA C104. Piping more than 5 feet outside the building walls shall comply with Section 02510a WATER DISTRIBUTION SYSTEM.

2.4.2 Fittings and Gaskets

Fittings shall be ductile iron conforming to AWWA C110. Gaskets shall be suitable in design and size for the pipe with which such gaskets are to be

used. Gaskets for ductile iron pipe joints shall conform to AWWA C111.

2.4.3 Gate Valve and Indicator Posts

Gate valves for underground installation shall be of the inside screw type with counter-clockwise rotation to open. Where indicating type valves are shown or required, indicating valves shall be gate valves with an approved indicator post of a length to permit the top of the post to be located 3 feet above finished grade. Gate valves and indicator posts shall be listed in UL Fire Prot Dir or FM P7825a and FM P7825b.

2.5 ABOVEGROUND PIPING COMPONENTS

Aboveground piping shall be steel.

2.5.1 Steel Piping Components

2.5.1.1 Steel Pipe

Except as modified herein, steel pipe shall be black as permitted by NFPA 13 and shall conform to applicable provisions of ASTM A 795, ASTM A 53/A 53M, or ASTM A 135. Pipe in which threads or grooves are cut shall be Schedule 40 or shall be listed by Underwriters' Laboratories to have a corrosion resistance ratio (CRR) of 1.0 or greater after threads or grooves are cut. Pipe 2 inches and smaller shall be minimum schedule 40 and pipe 2 1/2 inches and larger shall be minimum schedule 10. Pipe shall be marked with the name of the manufacturer, kind of pipe, and ASTM designation.

2.5.1.2 Fittings for Non-Grooved Steel Pipe

Fittings shall be cast iron conforming to ASME B16.4, steel conforming to ASME B16.9 or ASME B16.11, or malleable iron conforming to ASME B16.3. Steel press fittings shall not be approved for fire protection systems. Galvanized fittings shall be used for piping systems or portions of piping systems utilizing galvanized piping. Fittings into which sprinklers, drop nipples or riser nipples (sprigs) are screwed shall be threaded type. Plain-end fittings with mechanical couplings, fittings that use steel gripping devices to bite into the pipe and segmented welded fittings shall not be used.

2.5.1.3 Grooved Mechanical Joints and Fittings

Joints and fittings shall be designed for not less than 175 psi service and shall be the product of the same manufacturer. Fitting and coupling houses shall be malleable iron conforming to ASTM A 47/A 47M, Grade 32510; ductile iron conforming to ASTM A 536, Grade 65-45-12. Gasket shall be the flush type that fills the entire cavity between the fitting and the pipe. Nuts and bolts shall be heat-treated steel conforming to ASTM A 183 and shall be cadmium plated or zinc electroplated.

2.5.1.4 Flanges

Flanges shall conform to NFPA 13 and ASME B16.1. Gaskets shall be non-asbestos compressed material in accordance with ASME B16.21, 1/16 inch thick, and full face or self-centering flat ring type. Bolts shall be squarehead conforming to ASME B18.2.1 and nuts shall be hexagon type conforming to ASME B18.2.2.

2.5.2 Pipe Hangers

Hangers shall be listed in UL Fire Prot Dir or FM P7825a and FM P7825b and of the type suitable for the application, construction, and pipe type and sized to be supported.

2.5.3 Valves

2.5.3.1 Control Valve and Gate Valve

Manually operated sprinkler control valve and gate valve shall be outside stem and yoke (OS&Y) type and shall be listed in UL Bld Mat Dir or FM P7825a and FM P7825b.

2.5.3.2 Check Valve

Check valve 2 inches and larger shall be listed in UL Bld Mat Dir or FM P7825a and FM P7825b. Check valves 4 inches and larger shall be of the swing type with flanged cast iron body and flanged inspection plate, shall have a clear waterway and shall meet the requirements of MSS SP-71, for Type 3 or 4.

2.6 WATERFLOW ALARM

Electrically operated, exterior-mounted, waterflow alarm bell shall be provided and installed in accordance with NFPA 13. Waterflow alarm bell shall be rated 24 VDC and shall be connected to the Fire Alarm Control Panel(FACP) in accordance with Section 13851A FIRE DETECTION AND ALARM SYSTEM, ADDRESSABLE.

2.7 ALARM INITIATING AND SUPERVISORY DEVICES

2.7.1 Sprinkler Waterflow Indicator Switch, Vane Type

Switch shall be vane type with a pipe saddle and cast aluminum housing. The electro-mechanical device shall include a flexible, low-density polyethylene paddle conforming to the inside diameter of the fire protection pipe. The device shall sense water movements and be capable of detecting a sustained flow of 10 gpm or greater. The device shall contain a retard device adjustable from 0 to 90 seconds to reduce the possibility of false alarms caused by transient flow surges. The switch shall be tamper resistant and contain two SPDT (Form C) contacts arranged to transfer upon removal of the housing cover, and shall be equipped with a silicone rubber gasket to assure positive water seal and a dustproof cover and gasket to seal the mechanism from dirt and moisture.

2.7.2 Valve Supervisory (Tamper) Switch

Switch shall be suitable for mounting to the type of control valve to be supervised open. The switch shall be tamper resistant and contain one set of SPDT (Form C) contacts arranged to transfer upon removal of the housing cover or closure of the valve of more than two rotations of the valve stem.

2.8 FIRE DEPARTMENT CONNECTION

Fire department connection shall be flush type with cast brass body, matching wall escutcheon lettered "Auto Spkr" with a polished brass finish. The connection shall have two inlets with individual self-closing clappers, caps with drip drains and chains. Female inlets shall have 2-1/2 inch diameter American National Fire Hose Connection Screw Threads (NH) per

NFPA 1963.

2.8.1 WALL HYDRANT

Wall hydrant shall be flush type with cast brass body, matching wall escutcheon lettered "Wall Hydrant" with a polished brass finish. The hydrant shall have two outlets , caps and chains. Male outlets shall have 2-1/2 inch diameter American National Fire Hose Connection Screw Threads (NH) per NFPA 1963.

2.9 SPRINKLERS

Sprinklers with internal O-rings shall not be used. Sprinklers shall be used in accordance with their listed spacing limitations. Temperature classification shall be ordinary. Sprinklers in high heat areas including attic spaces or in close proximity to unit heaters shall have temperature classification in accordance with NFPA 13. Orifice of extended coverage sprinklers shall not exceed 17/32 inch.

2.9.1 Pendent Sprinkler

Pendent sprinkler shall be of the fusible strut or glass bulb type, recessed, quick-response type with nominal 1/2 inch or 17/32 inch orifice. Pendent sprinklers shall have a polished chromefinish.

2.9.2 Upright Sprinkler

Upright sprinkler shall be brass, quick-response type and shall have a nominal 1/2 inch or 17/32 inch orifice.

2.9.3 Sidewall Sprinkler

Sidewall sprinkler shall have a nominal 1/2 inch orifice. Sidewall sprinkler shall have a polished chrome finish. Sidewall sprinkler shall be the quick-response type.

2.9.4 Dry Sprinkler Assembly

Dry sprinkler assembly shall be of the sidewall, type. Assembly shall include an integral escutcheon. Maximum length shall not exceed maximum indicated in UL Fire Prot Dir. Sprinklers shall have a polished chrome finish.

2.10 DISINFECTING MATERIALS

2.10.1 Liquid Chlorine

Liquid chlorine shall conform to AWWA B301.

2.10.2 Hypochlorites

Calcium hypochlorite and sodium hypochlorite shall conform to AWWA B300.

2.11 ACCESSORIES

2.11.1 Sprinkler Cabinet

Spare sprinklers shall be provided in accordance with NFPA 13 and shall be

packed in a suitable metal or plastic cabinet. Spare sprinklers shall be representative of, and in proportion to, the number of each type and temperature rating of the sprinklers installed. At least one wrench of each type required shall be provided.

2.11.2 Pendent Sprinkler Escutcheon

Escutcheon shall be one-piece metallic type with a depth of less than 3/4 inch and suitable for installation on pendent sprinklers. The escutcheon shall have a factory finish that matches the pendent sprinkler heads.

2.11.3 Pipe Escutcheon

Escutcheon shall be polished chromium-plated zinc alloy, or polished chromium-plated copper alloy. Escutcheons shall be either one-piece or split-pattern, held in place by internal spring tension or set screw.

2.11.4 Sprinkler Guard

Guard shall be a steel wire cage designed to encase the sprinkler and protect it from mechanical damage.

2.11.5 Identification Sign

Valve identification sign shall be minimum 6 inches wide x 2 inches high with enamel baked finish on minimum 18 gauge steel or 0.024 inch aluminum with red letters on a white background or white letters on red background. Wording of sign shall include, but not be limited to "main drain," "auxiliary drain," "inspector's test," "alarm test," "alarm line," and similar wording as required to identify operational components.

2.12 DOUBLE-CHECK VALVE BACKFLOW PREVENTION ASSEMBLY

Double-check backflow prevention assembly shall comply with ASSE 1015. The assembly shall have a bronze, cast-iron or stainless steel body with flanged ends. The assembly shall include pressure gauge test ports and OS&Y shutoff valves on the inlet and outlet, 2-positive-seating check valve for continuous pressure application, and four test cocks. Assemblies shall be rated for working pressure of 175 psi The maximum pressure loss shall be 6 psi at a flow rate equal to the sprinkler water demand, at the location of the assembly. A test port for a pressure gauge shall be provided both upstream and downstream of the double check backflow prevention assembly valves.

PART 3 EXECUTION

3.1 FIRE PROTECTION RELATED SUBMITTALS

The Fire Protection Specialist shall prepare a list of the submittals from the Contract Submittal Register that relate to the successful installation of the sprinkler systems(s). The submittals identified on this list shall be accompanied by a letter of approval signed and dated by the Fire Protection Specialist when submitted to the Government.

3.2 INSTALLATION REQUIREMENTS

The installation shall be in accordance with the applicable provisions of NFPA 13, NFPA 24 and publications referenced therein.

3.3 INSPECTION BY FIRE PROTECTION SPECIALIST

The Fire Protection Specialist shall inspect the sprinkler system periodically during the installation to assure that the sprinkler system is being provided and installed in accordance with the contract requirements. The Fire Protection Specialist shall witness the preliminary and final tests, and shall sign the test results. The Fire Protection Specialist, after completion of the system inspections and a successful final test, shall certify in writing that the system has been installed in accordance with the contract requirements. Any discrepancy shall be brought to the attention of the Contracting Officer in writing, no later than three working days after the discrepancy is discovered.

3.4 ABOVEGROUND PIPING INSTALLATION

3.4.1 Force Protection

Force protection is required for all suspended fire protection equipment. All such systems shall be mounted such that they resist a horizontal force equal to 0.5 times the component weight and a vertical downward force equal to 1.5 times the component weight. Force protection shall be accomplished by providing bracing and suspension which conforms to minimum seismic bracing requirements. Seismic protection shall include flexible and rigid couplings, sway bracing, seismic separation assemblies where piping crosses building seismic separation joints, and other features as required by NFPA 13 for protection of piping against damage from earthquakes. The use of alternative methods of providing earthquake protection of sprinkler systems based on a dynamic analysis is not allowed. The use of horizontal force factors other than 0.5 is not allowed.

3.4.2 Piping in Exposed Areas

Exposed piping shall be installed so as not to diminish exit access widths, corridors or equipment access. Exposed horizontal piping, including drain piping, shall be installed to provide maximum headroom.

3.4.3 Piping in Finished Areas

In areas with suspended or dropped ceilings and in areas with concealed spaces above the ceiling, piping shall be concealed above ceilings. Piping shall be inspected, tested and approved before being concealed. Risers and similar vertical runs of piping in finished areas shall be concealed.

3.4.4 Pendent Sprinklers

Drop nipples to pendent sprinklers shall consist of minimum 1 inch pipe with a reducing coupling into which the sprinkler shall be threaded. Hangers shall be provided on arm-overs to drop nipples supplying pendent sprinklers when the arm-over exceeds 12 inches. Where sprinklers are installed below suspended or dropped ceilings, drop nipples shall be cut such that sprinkler ceiling plates or escutcheons are of a uniform depth throughout the finished space. The outlet of the reducing coupling shall not extend more than 1 inch below the underside of the ceiling. On pendent sprinklers installed below suspended or dropped ceilings, the distance from the sprinkler deflector to the underside of the ceiling shall not exceed 4 inches. Recessed pendent sprinklers shall be installed such that the distance from the sprinkler deflector to the underside of the ceiling shall not exceed the manufacturer's listed range and shall be of uniform depth throughout the finished area.

3.4.4.1 Pendent Sprinkler Locations

Pendent sprinklers in suspended ceilings shall be a minimum of 6 inches from ceiling grid.

3.4.5 Upright Sprinklers

Riser nipples or "sprigs" to upright sprinklers shall contain no fittings between the branch line tee and the reducing coupling at the sprinkler. Riser nipples exceeding 30 inches in length shall be individually supported.

3.4.6 Pipe Joints

Pipe joints shall conform to NFPA 13, except as modified herein. Not more than four threads shall show after joint is made up. Welded joints will be permitted, only if welding operations are performed as required by NFPA 13 at the Contractor's fabrication shop, not at the project construction site. Flanged joints shall be provided where indicated or required by NFPA 13. Grooved pipe and fittings shall be prepared in accordance with the manufacturer's latest published specification according to pipe material, wall thickness and size. Grooved couplings and fittings shall be from the same manufacturer.

3.4.7 Reducers

Reductions in pipe sizes shall be made with one-piece tapered reducing fittings. The use of grooved-end or rubber-gasketed reducing couplings will not be permitted. When standard fittings of the required size are not manufactured, single bushings of the face type will be permitted. Where used, face bushings shall be installed with the outer face flush with the face of the fitting opening being reduced. Bushings shall not be used in elbow fittings, in more than one outlet of a tee, in more than two outlets of a cross, or where the reduction in size is less than 1/2 inch.

3.4.8 Pipe Penetrations

Cutting structural members for passage of pipes or for pipe-hanger fastenings will not be permitted. Pipes that must penetrate concrete or masonry walls or concrete floors shall be core-drilled and provided with pipe sleeves. Each sleeve shall be Schedule 40 galvanized steel, ductile iron or cast iron pipe and shall extend through its respective wall or floor and be cut flush with each wall surface. Sleeves shall provide required clearance between the pipe and the sleeve per NFPA 13. The space between the sleeve and the pipe shall be firmly packed with mineral wool insulation. Where pipes penetrate fire walls, fire partitions, or floors, pipes shall be fire stopped in accordance with Section 07840a FIRESTOPPING. In penetrations that are not fire-rated or not a floor penetration, the space between the sleeve and the pipe shall be sealed at both ends with plastic waterproof cement that will dry to a firm but pliable mass or with a mechanically adjustable segmented elastomer seal.

3.4.9 Escutcheons

Escutcheons shall be provided for pipe penetration of ceilings and walls. Escutcheons shall be securely fastened to the pipe at surfaces through which piping passes.

3.4.10 Inspector's Test Connection

Unless otherwise indicated, test connection shall consist of 1 inch pipe connected to the remote branch line; a test valve located approximately 7 feet above the floor; a smooth bore brass outlet equivalent to the smallest orifice sprinkler used in the system; and a painted metal identification sign affixed to the valve with the words "Inspector's Test." The discharge orifice shall be located outside the building wall directed so as not to cause damage to adjacent construction or landscaping during full flow discharge. Provide a two foot by two foot splash block at the discharge point.

3.4.11 Drains

Main drain piping shall be provided to discharge at a safe point outside the building. Provide a two foot by two foot splash block at the discharge point. Auxiliary drains shall be provided as indicated and as required by NFPA 13. When the capacity of trapped sections of pipe is less than 3 gallons, the auxiliary drain shall consist of a valve not smaller than 1/2 inch and a plug or nipple and cap. When the capacity of trapped sections of piping is more than 3 gallons, the auxiliary drain shall consist of two 1 inch valves and one 2 x 12 inch condensate nipple or equivalent, located in an accessible location. Tie-in drains shall be provided for multiple adjacent trapped branch pipes and shall be a minimum of 1 inch in diameter. Tie-in drain lines shall be pitched a minimum of 1/2 inch per 10 feet.

3.4.12 Installation of Fire Department Connection

Connection shall be mounted on the exterior wall approximately 3 feet above finished grade. The piping between the connection and the check valve shall be provided with an automatic drip in accordance with NFPA 13 and arranged to drain to the outside.

3.4.13 Identification Signs

Signs shall be affixed to each control valve, inspector test valve, main drain, auxiliary drain, test valve, and similar valves as appropriate or as required by NFPA 13. Hydraulic design data nameplates shall be permanently affixed to each sprinkler riser as specified in NFPA 13.

3.5 UNDERGROUND PIPING INSTALLATION

The fire protection water main shall be laid, and joints anchored, in accordance with NFPA 24. Minimum depth of cover shall be 3 feet. The supply line shall terminate inside the building with a flanged piece, the bottom of which shall be set not less than 6 inches above the finished floor. A blind flange shall be installed temporarily on top of the flanged piece to prevent the entrance of foreign matter into the supply line. A concrete thrust block shall be provided at the elbow where the pipe turns up toward the floor. In addition, joints shall be anchored in accordance with NFPA 24 using pipe clamps and steel rods from the elbow to the flange above the floor and from the elbow to a pipe clamp in the horizontal run of pipe. Buried steel components shall be provided with a corrosion protective coating in accordance with AWWA C203. Piping more than 5 feet outside the building walls shall meet the requirements of Section 02510a WATER DISTRIBUTION SYSTEM.

3.6 EARTHWORK

Earthwork shall be performed in accordance with applicable provisions of

Section 02315a EXCAVATION, FILLING AND BACKFILLING FOR BUILDINGS.

3.7 ELECTRICAL WORK

Except as modified herein, electric equipment and wiring shall be in accordance with Section 16415A ELECTRICAL WORK, INTERIOR. Alarm signal wiring connected to the building fire alarm control system shall be in accordance with Section 13851A Fire Alarm and Detection system, Addressible. Wiring color code shall remain uniform throughout the system.

3.8 DISINFECTION

After all system components are installed and hydrostatic test(s) are successfully completed, each portion of the sprinkler system to be disinfected shall be thoroughly flushed with potable water until all entrained dirt and other foreign materials have been removed before introducing chlorinating material. Flushing shall be conducted by removing the flushing fitting of the cross mains and of the grid branch lines, and then back-flushing through the sprinkler main drains. The chlorinating material shall be hypochlorites or liquid chlorine. Water chlorination procedure shall be in accordance with AWWA M20. The chlorinating material shall be fed into the sprinkler piping at a constant rate of 50 parts per million (ppm). A properly adjusted hypochlorite solution injected into the system with a hypochlorinator, or liquid chlorine injected into the system through a solution-fed chlorinator and booster pump shall be used. Chlorination application shall continue until the entire system if filled. The water shall remain in the system for a minimum of 24 hours. Each valve in the system shall be opened and closed several times to ensure its proper disinfection. Following the 24-hour period, no less than 25 ppm chlorine residual shall remain in the system. The system shall then be flushed with clean water until the residual chlorine is reduced to less than one part per million. Samples of water in disinfected containers for bacterial examination will be taken from several system locations which are approved by the Contracting Officer. Samples shall be tested for total coliform organisms (coliform bacteria, fecal coliform, streptococcal, and other bacteria) in accordance with AWWA EWW. The testing method shall be either the multiple-tube fermentation technique or the membrane-filter technique. The disinfection shall be repeated until tests indicate the absence of coliform organisms (zero mean coliform density per 100 milliliters) in the samples for at least 2 full days. The system will not be accepted until satisfactory bacteriological results have been obtained. After successful completion, verify installation of all sprinklers and plugs and pressure test the system.

3.9 PIPE COLOR CODE MARKING

Color code marking of piping shall be as specified in Section 09900 PAINTS AND COATINGS.

3.10 PRELIMINARY TESTS

The system, including the underground water mains, and the aboveground piping and system components, shall be tested to assure that equipment and components function as intended. The underground and aboveground interior piping systems and attached appurtenances subjected to system working pressure shall be tested in accordance with NFPA 13 and NFPA 24. Upon completion of specified tests, the Contractor shall complete certificates as specified in paragraph SUBMITTALS.

3.10.1 Underground Piping

3.10.1.1 Flushing

Underground piping shall be flushed in accordance with NFPA 24. This includes the requirement to flush the lead-in connection to the fire protection system at a flow rate not less that the calculated maximum water demand rate of the system.

3.10.1.2 Hydrostatic Testing

New underground piping shall be hydrostatically tested in accordance with NFPA 24. The allowable leakage shall be measured at the specified test pressure by pumping from a calibrated container. The amount of leakage at the joints shall not exceed 2 quarts per hour per 100 gaskets or joints, regardless of pipe diameter.

3.10.2 Aboveground Piping

3.10.2.1 Hydrostatic Testing

Aboveground piping shall be hydrostatically tested in accordance with NFPA 13 at not less than 200 psi or 50 psi in excess of maximum system operating pressure and shall maintain that pressure without loss for 2 hours. There shall be no drop in gauge pressure or visible leakage when the system is subjected to the hydrostatic test. The test pressure shall be read from a gauge located at the low elevation point of the system or portion being tested.

3.10.2.2 Backflow Prevention Assembly Forward Flow Test

Each backflow prevention assembly shall be tested at system flow demand, including all applicable hose streams, as specified in NFPA 13. The Contractor shall provide all equipment and instruments necessary to conduct a complete forward flow test, including2.5 inch diameter hoses, playpipe nozzles, calibrated pressure gauges, and pitot tube gauge. The Contractor shall provide all necessary supports to safely secure hoses and nozzles during the test. At the system demand flow, the pressure readings and pressure drop (friction) across the assembly shall be recorded. A metal placard shall be provided on the backflow prevention assembly that lists the pressure readings both upstream and downstream of the assembly, total pressure drop, and the system test flow rate. The pressure drop shall be compared to the manufacturer's data.

3.10.3 Testing of Alarm Devices

Each alarm switch shall be tested by flowing water through the inspector's test connection. Each water-operated alarm devices shall be tested to verify proper operation.

3.10.4 Main Drain Flow Test

Following flushing of the underground piping, a main drain test shall be made to verify the adequacy of the water supply. Static and residual pressures shall be recorded on the certificate specified in paragraph SUBMITTALS. In addition, a main drain test shall be conducted each time after a main control valve is shut and opened.

3.11 FINAL ACCEPTANCE TEST

Final Acceptance Test shall begin only when the Preliminary Test Report has been approved. The Fire Protection Specialist shall conduct the Final Acceptance Test and shall provide a complete demonstration of the operation of the system. This shall include operation of control valves and flowing of inspector's test connections to verify operation of associated waterflow alarm switches. After operation of control valves has been completed, the main drain test shall be repeated to assure that control valves are in the open position. In addition, the representative shall have available copies of as-built drawings and certificates of tests previously conducted. The installation shall not be considered accepted until identified discrepancies have been corrected and test documentation is properly completed and received.

3.12 ON-SITE TRAINING

The Fire Protection Specialist shall conduct a training course for operating and maintenance personnel as designated by the Contracting Officer. Training shall be provided for a period of 4 hours of normal working time and shall start after the system is functionally complete but prior to the Preliminary Tests and Final Acceptance Test. The On-Site Training shall cover all of the items contained in the approved Operating and Maintenance Instructions.

-- End of Section --